KYOCERA

FS-1118MFP
KM-1820

SERVICE MANUAL

Published in February 2005
842GM110

TONER+
www.tonerplus.com.ua

CAUTION

Danger of explosion if battery is incorrectly replaced. Replace only with the same or equivalent type recommended by the manufacturer. Dispose of used batteries according to the manufacturer's instructions.

CAUTION

Double-pole/neutral fusing.

TONER+
www.tonerplus.com.ua

Revision history

Revision	Date	Replaced pages	Remarks

TONER
www.tonerplus.com.ua

Safety precautions

This booklet provides safety warnings and precautions for our service personnel to ensure the safety of their customers, their machines as well as themselves during maintenance activities. Service personnel are advised to read this booklet carefully to familiarize themselves with the warnings and precautions described here before engaging in maintenance activities.

www.tonerplus.com.ua

Safety warnings and precautions

Various symbols are used to protect our service personnel and customers from physical danger and to prevent damage to their property. These symbols are described below:

⚠**DANGER**: High risk of serious bodily injury or death may result from insufficient attention to or incorrect compliance with warning messages using this symbol.

⚠**WARNING**:Serious bodily injury or death may result from insufficient attention to or incorrect compliance with warning messages using this symbol.

⚠**CAUTION**: Bodily injury or damage to property may result from insufficient attention to or incorrect compliance with warning messages using this symbol.

Symbols

The triangle (△) symbol indicates a warning including danger and caution. The specific point of attention is shown inside the symbol.

General warning.

Warning of risk of electric shock.

Warning of high temperature.

⃠ indicates a prohibited action. The specific prohibition is shown inside the symbol.

General prohibited action.

Disassembly prohibited.

● indicates that action is required. The specific action required is shown inside the symbol.

General action required.

Remove the power plug from the wall outlet.

Always ground the copier.

TONER
www.tonerplus.com.ua

1. Installation Precautions

⚠ WARNING

- Do not use a power supply with a voltage other than that specified. Avoid multiple connections to one outlet: they may cause fire or electric shock. When using an extension cable, always check that it is adequate for the rated current. .....

- Connect the ground wire to a suitable grounding point. Not grounding the copier may cause fire or electric shock. Connecting the earth wire to an object not approved for the purpose may cause explosion or electric shock. Never connect the ground cable to any of the following: gas pipes, lightning rods, ground cables for telephone lines and water pipes or faucets not approved by the proper authorities. .....

⚠ CAUTION:

- Do not place the copier on an infirm or angled surface: the copier may tip over, causing injury. .....

- Do not install the copier in a humid or dusty place. This may cause fire or electric shock. .....

- Do not install the copier near a radiator, heater, other heat source or near flammable material. This may cause fire. .....

- Allow sufficient space around the copier to allow the ventilation grills to keep the machine as cool as possible. Insufficient ventilation may cause heat buildup and poor copying performance. .....

- Always handle the machine by the correct locations when moving it. .....

- Always use anti-toppling and locking devices on copiers so equipped. Failure to do this may cause the copier to move unexpectedly or topple, leading to injury. .....

- Avoid inhaling toner or developer excessively. Protect the eyes. If toner or developer is accidentally ingested, drink a lot of water to dilute it in the stomach and obtain medical attention immediately. If it gets into the eyes, rinse immediately with copious amounts of water and obtain medical attention. .....

- Advice customers that they must always follow the safety warnings and precautions in the copier's instruction handbook. .....

TONER+
www.tonerplus.com.ua

2. Precautions for Maintenance

⚠WARNING

- Always remove the power plug from the wall outlet before starting machine disassembly. .....
- Always follow the procedures for maintenance described in the service manual and other related brochures. .....
- Under no circumstances attempt to bypass or disable safety features including safety mechanisms and protective circuits. .....
- Always use parts having the correct specifications. .....
- Always use the thermostat or thermal fuse specified in the service manual or other related brochure when replacing them. Using a piece of wire, for example, could lead to fire or other serious accident. .....
- When the service manual or other serious brochure specifies a distance or gap for installation of a part, always use the correct scale and measure carefully. .....
- Always check that the copier is correctly connected to an outlet with a ground connection. .....
- Check that the power cable covering is free of damage. Check that the power plug is dust-free. If it is dirty, clean it to remove the risk of fire or electric shock. .....
- Never attempt to disassemble the optical unit in machines using lasers. Leaking laser light may damage eyesight. .....
- Handle the charger sections with care. They are charged to high potentials and may cause electric shock if handled improperly. .....

⚠CAUTION

- Wear safe clothing. If wearing loose clothing or accessories such as ties, make sure they are safely secured so they will not be caught in rotating sections. .....
- Use utmost caution when working on a powered machine. Keep away from chains and belts. .....
- Handle the fixing section with care to avoid burns as it can be extremely hot. .....
- Check that the fixing unit thermistor, heat and press rollers are clean. Dirt on them can cause abnormally high temperatures. .....
- Do not remove the ozone filter, if any, from the copier except for routine replacement. .....

TONER
www.tonerplus.com.ua

- Do not pull on the AC power cord or connector wires on high-voltage components when removing them; always hold the plug itself. .....

- Do not route the power cable where it may be stood on or trapped. If necessary, protect it with a cable cover or other appropriate item. .....

- Treat the ends of the wire carefully when installing a new charger wire to avoid electric leaks. .....

- Remove toner completely from electronic components. .....

- Run wire harnesses carefully so that wires will not be trapped or damaged. .....

- After maintenance, always check that all the parts, screws, connectors and wires that were removed, have been refitted correctly. Special attention should be paid to any forgotten connector, trapped wire and missing screws. .....

- Check that all the caution labels that should be present on the machine according to the instruction handbook are clean and not peeling. Replace with new ones if necessary. .....

- Handle greases and solvents with care by following the instructions below: .....
  · Use only a small amount of solvent at a time, being careful not to spill. Wipe spills off completely.
  · Ventilate the room well while using grease or solvents.
  · Allow applied solvents to evaporate completely before refitting the covers or turning the main switch on.
  · Always wash hands afterwards.

- Never dispose of toner or toner bottles in fire. Toner may cause sparks when exposed directly to fire in a furnace, etc. .....

- Should smoke be seen coming from the copier, remove the power plug from the wall outlet immediately. .....

3. Miscellaneous

⚠ WARNING

- Never attempt to heat the drum or expose it to any organic solvents such as alcohol, other than the specified refiner; it may generate toxic gas. .....

TONER+
www.tonerplus.com.ua

CONTENTS

1-1 Specifications

1-1-1 Specifications 1-1-1
1-1-2 Names of parts 1-1-3
(1) Main body 1-1-3
(2) Operation panel 1-1-4

1-2 Handling Precautions

1-2-1 Drum 1-2-1
1-2-2 Installation environment 1-2-1

1-3 Installation

1-3-1 Unpacking and installation 1-3-1
(1) Installation procedure 1-3-1
1-3-2 Connecting the cable 1-3-16
(1) Connecting the network cable 1-3-16
(2) Connecting the printer cable 1-3-17
1-3-3 Installing the document processor (option) 1-3-18
1-3-4 Installing the expanding memory (option) 1-3-21
1-3-5 Installing the fax system (option) 1-3-22

1-4 Maintenance Mode

1-4-1 Maintenance mode 1-4-1
(1) Executing a maintenance item 1-4-1
(2) Maintenance modes 1-4-2
(3) Contents of maintenance mode items 1-4-3
1-4-2 System settings 1-4-18
(1) Executing a system setting item 1-4-18
(2) System settings 1-4-19
1-4-3 Service settings 1-4-21
(1) Executing a service setting item 1-4-21
(2) Contents of service setting items 1-4-22

1-5 Troubleshooting

1-5-1 Paper misfeed detection 1-5-1
(1) Paper misfeed indication 1-5-1
(2) Paper misfeed detection conditions 1-5-2
(3) Paper misfeeds 1-5-4
1-5-2 Self-diagnosis 1-5-8
(1) Self-diagnostic function 1-5-8
(2) Self-diagnostic codes 1-5-8
1-5-3 Image formation problems 1-5-15
(1) No image appears (entirely white). 1-5-16
(2) No image appears (entirely black). 1-5-16
(3) Image is too light. 1-5-17
(4) Background is visible. 1-5-17
(5) A white line appears longitudinally. 1-5-17
(6) A black line appears longitudinally. 1-5-18
(7) A black line appears laterally. 1-5-18
(8) One side of the print image is darker than the other. 1-5-18
(9) Black dots appear on the image. 1-5-19
(10) Image is blurred. 1-5-19
(11) The leading edge of the image is consistently misaligned with the original. 1-5-19
(12) Paper creases. 1-5-20
(13) Offset occurs. 1-5-20
(14) Image is partly missing. 1-5-20

TONER
www.tonerplus.com.ua

(15) Fixing is poor. 1-5-21
(16) Image center does not align with the original center. 1-5-21
1-5-4 Electrical problems 1-5-22
(1) The machine does not operate when the power switch is turned on. 1-5-22
(2) The main motor does not operate. (C2000) 1-5-22
(3) The scanner motor does not operate. 1-5-22
(4) Cooling fan does not operate. 1-5-22
(5) The feed clutch does not operate. 1-5-22
(6) The MP feed clutch does not operate. 1-5-23
(7) The registration clutch does not operate. 1-5-23
(8) The eraser lamp does not turn on. 1-5-23
(9) The exposure lamp does not turn on. 1-5-23
(10) The exposure lamp does not turn off. 1-5-23
(11) The heater lamp does not turn on. 1-5-23
(12) The heater lamp does not turn off. 1-5-23
(13) Main charging is not performed. 1-5-24
(14) Transfer charging is not performed. 1-5-24
(15) A paper jam in the paper feed or exit section is indicated when the power switch is turned on. 1-5-24
(16) The message requesting cover to be closed is displayed when the front cover is closed. 1-5-24
(17) Others. 1-5-24
1-5-5 Mechanical problems 1-5-25
(1) No primary paper feed. 1-5-25
(2) No secondary paper feed. 1-5-25
(3) Skewed paper feed. 1-5-25
(4) The scanner does not travel. 1-5-25
(5) Multiple sheets of paper are fed at one time. 1-5-25
(6) Paper jams. 1-5-25
(7) Abnormal noise is heard. 1-5-25

1-6 Assembly and Disassembly

1-6-1 Precautions for assembly and disassembly 1-6-1
(1) Precautions 1-6-1
1-6-2 Removing the process unit 1-6-2
1-6-3 Removing the principal outer covers 1-6-3
(1) Removing the front top cover/face-down output tray 1-6-3
(2) Removing the right cover 1-6-4
(3) Removing the left cover 1-6-4
1-6-4 Removing the feed roller 1-6-5
1-6-5 Removing the MP feed roller 1-6-6
1-6-6 Removing the transfer roller 1-6-8
1-6-7 Removing the primary circuit PWBs 1-6-9
(1) Removing the engine PWB 1-6-9
(2) Removing the main PWB 1-6-10
(3) Removing the power supply PWB and high voltage PWB 1-6-12
(4) Removing the bias PWB 1-6-13
1-6-8 Removing the main motor and drive unit 1-6-14
1-6-9 Removing and splitting the fuser unit 1-6-18
(1) Removing the separation craws 1-6-20
(2) Removing the heater lamp 1-6-21
(3) Removing the heat roller 1-6-22
(4) Removing the thermistor 1-6-24
(5) Removing the thermal cutout 1-6-25
(6) Removing the press roller 1-6-26
1-6-10 Removing and scanner unit 1-6-27
1-6-11 Removing the laser scanner unit and the eraser lamp 1-6-29
1-6-12 Removing the ISU unit 1-6-32

TONER

1-6-13 Removing the exposure lamp 1-6-34
1-6-14 Removing the scanner mirror A 1-6-36
1-6-15 Removing the scanner motor 1-6-37
1-6-16 Removing the main charger unit 1-6-40
1-6-17 Adjustment the maintenance mode 1-6-41
(1) Adjusting the leading edge registration of image printing 1-6-41
(2) Adjusting the center line of image printing 1-6-42
(3) Adjusting the amount of slack in the paper 1-6-43
(4) Adjusting magnification of the scanner in the main scanning direction 1-6-44
(5) Adjusting magnification of the scanner in the auxiliary scanning direction 1-6-45
(6) Adjusting the scanner leading edge registration 1-6-46
(7) Adjusting the scanner center line 1-6-47
(8) Adjusting the margins for scanning an original on the contact glass 1-6-48
(9) Adjusting the DP magnification 1-6-49
(10) Adjusting the DP leading edge registration 1-6-50
(11) Adjusting the DP trailing edge registration 1-6-51
(12) Adjusting the DP center line 1-6-52
(13) Adjusting the margins for scanning the original from the DP 1-6-53

1-7 Upgrading the firmware

1-7-1 Upgrading the firmware on the main PWB 1-7-1

2-1 Mechanical construction

2-1-1 Paper feeding system 2-1-1
(1) Paper feed control 2-1-2
(2) Paper feeding mechanism 2-1-3
2-1-2 Original scanning system 2-1-4
(1) ISU unit 2-1-6
2-1-3 Electrophotographic system 2-1-7
(1) Electrophotographic cycle 2-1-7
(1-1) Process unit mechanism 2-1-8
(2) Main charging 2-1-9
(2-1) Photo conductive drum 2-1-9
(2-2) Charging the drum 2-1-10
(3) Exposure 2-1-11
(3-1) Laser scanner unit 2-1-12
(3-2) Drum surface potential 2-1-13
(4) Development 2-1-14
(5) Transfer 2-1-15
(6) Fusing 2-1-16
(6-1) Fuser unit mechanism 2-1-17
(7) Cleaning 2-1-18

2-2 Electrical Parts Layout

2-2-1 Electrical parts layout 2-2-1
(1) Main unit 2-2-1
(2) Scanner unit 2-2-2

2-3 Operation of the PWBs

2-3-1 Main PWB 2-3-1
2-3-2 Engine PWB 2-3-7
(1) Eraser lamp control circuit 2-3-9
(2) Heater lamp control circuit 2-3-10
(3) Polygon motor control circuit 2-3-13
2-3-3 Power supply PWB 2-3-17
2-3-4 Bias PWB 2-3-19
2-3-5 High voltage PWB 2-3-20
(1) Interlock switch 2-3-21

TONER
www.tonerpro.com.ua

2-3-6 CCD PWB 2-3-22
2-3-7 Operation PWB 2-3-24
2-3-8 Scanner PWB 2-3-26

2-4 Appendixes

Timing chart No. 1 2-4-1
Timing chart No. 2 2-4-2
Timing chart No. 3 2-4-3
Wiring diagram 2-4-4

TONER
www.tonerplus.com.ua

1-1-1 Specifications

Type	Desktop
Copying system	Indirect electrostatic system
Originals	Sheets of paper (Maximum original size: folio/$8^1/_2$" × 14" [legal]) Platen: Sheets of paper, books, 3-dimensional objects (Maximum original size: folio/ $8^1/_2$" × 14" [legal])
Original feed system	Contact glass: fixed Document processor (optional): sheet-through
Copy paper	Cassette: Plain paper (60 - 105 g/m^2) MP tray: Plain paper (60 - 163 g/m^2) Special paper: Transparencies, letterhead, colored paper, recycled paper Note: Use the MP tray for special paper.
Copying sizes	Maximum: folio/$8^1/_2$" × 14" [legal] Minimum: A6R /$5^1/_2$" × $8^1/_2$"
Magnification ratios	Manual mode: 50 - 200%, 1% increments
Copying speed	At 100% magnification, platen: A4/$8^1/_2$" × 11": 18 copies/min. A5: 10 copies/min. $8^1/_2$" × 14": 15 copies/min. At 100% magnification, document processor: A4/$8^1/_2$" × 11": 18 copies/min.
First copy speed	Apporox. 9.5 s (A4/$8^1/_2$" × 11", original placed on the platen)
Warm-up time	20 s or less Recovery from the low power mode: 10 s or less Recovery from the sleep mode: 15 s or less (at room temperature 23 °C/73.4 °F, humidity 60% RH)
Paper feed system	Cassette: 250 sheets (80 g/m^2) MP tray: 50 sheets (80 g/m^2) 25 sheets (120 g/m^2) 10 sheets (160 g/m^2) 1 sheet (Transparency)
Stacking capacity	Output tray: Approx. 150 sheets (80 g/m^2) Face-up tray: 30 sheets (80 g/m^2) 1 sheet (Special paper)
Standard memory	96 MB (64 MB of system memory and 32 MB of additional memory) (Approx. 70 pages of memory possible with letter size, 5%, Text+Photo mode)
Additional memory	1 slot (64 MB, 128 MB or 256 MB)
Continuous copying	1 - 999 sheets
Scanning system	Flat bed scanning by CCD image sensor
Resolution	Reading (scanning) 600 × 600 dpi Writing (printing) 600 × 600 dpi
Original quality mode	Text+Photo, Photo and Text
Light source	Cold cathode lamp
Photoconductor	OPC (drum diameter 30 mm)
Charging system	Single positive corona charging
Developing system	Single element reversing process
Transfer system	Transfer roller
Fusing system	Heat roller Heat source: halogen heaters (750 W) Control temperature: 190 °C/374 °F (at normal ambient temperature) Abnormally high temperature protection device: thermal cutout
Charge erasing system	Exposure by cleaning lamp
Cleaning system	Cleaning blade
Dimensions	496 (W) × 421 (D) × 385 (H) mm $19^9/_{16}$" (W) × $16^5/_8$" (D) × $15^3/_{16}$" (H)
Weight	Approx. 14.5 kg/32.0 lbs
Floor requirements	496 (W) × 740 (D) mm $19^9/_{16}$" (W) × $29^3/_{16}$" (D)
Functions	Auto exposure adjustment, Ecoprint mode, Zoom mode, Preset zoom mode, Off mode, Print override mode, Low power mode, Layout modes, Sort mode and Program function

TONER
www.tonerplus.com.ua

Power source ..... 120 V AC, 60 Hz, 7.8 A
220 - 240 V AC, 50/60 Hz, 4.0 A
Power consumption ..... 854 W
Options ..... Paper feeder, document processor (DP), additional memory and fax system

• Printing functions

Printing speed ..... A4/8$^1/_2$" × 11": 18 prints/min.
A5: 10 prints/min.
8$^1/_2$" × 14": 15 prints/min.
First print speed ..... Apporox. 8 s (A4/8$^1/_2$" × 11")
Resolution ..... 300, 600 dpi and Fast 1200
Compatible operation system ..... Microsoft Windows 95/98/Me/NT 4.0/2000/XP
Apple Macintosh OS 9.x/OS X 10.x
UNIX/Linux
Host interface ..... Parallel: 1 port (IEEE1284)
USB: 1 port (Hi-speed USB 2.0)
Ethernet: 1 port (10BASE-T/100BASE-TX)
PDL ..... PRESCRIBE
Emulation mode ..... Line printer, IBM proprinter, DIABLO 630, EPSON LQ-850, PCL6 and KPDL

• Scanning functions

Scanning speed ..... Monochrome: 18 spm
Full color or Grayscale: 4.8 spm
(1:1 - A4/8$^1/_2$" × 11", 200 dpi)
Resolution ..... 200 × 100, 200 × 400, 200, 300, 400 and 600 dpi
Color mode ..... Full color, Grayscale and Monochrome
Halftone ..... Full color: 8 bit/dot: each color
Grayscale: 8 bit/dot
Monochrome: 1 bit/dot
Original quality mode ..... Text+Photo, Photo, Text and OCR
File format ..... PDF (All modes), TIFF (only monochrome mode), JPEG (except monochrome mode)
Host interface ..... Ethernet: 1 port (10BASE-T/100BASE-TX)
USB (TWAIN): 1 port (Hi-speed USB)

TONER
www.tonerplus.com.ua

1-1-2 Names of parts

(1) Main body

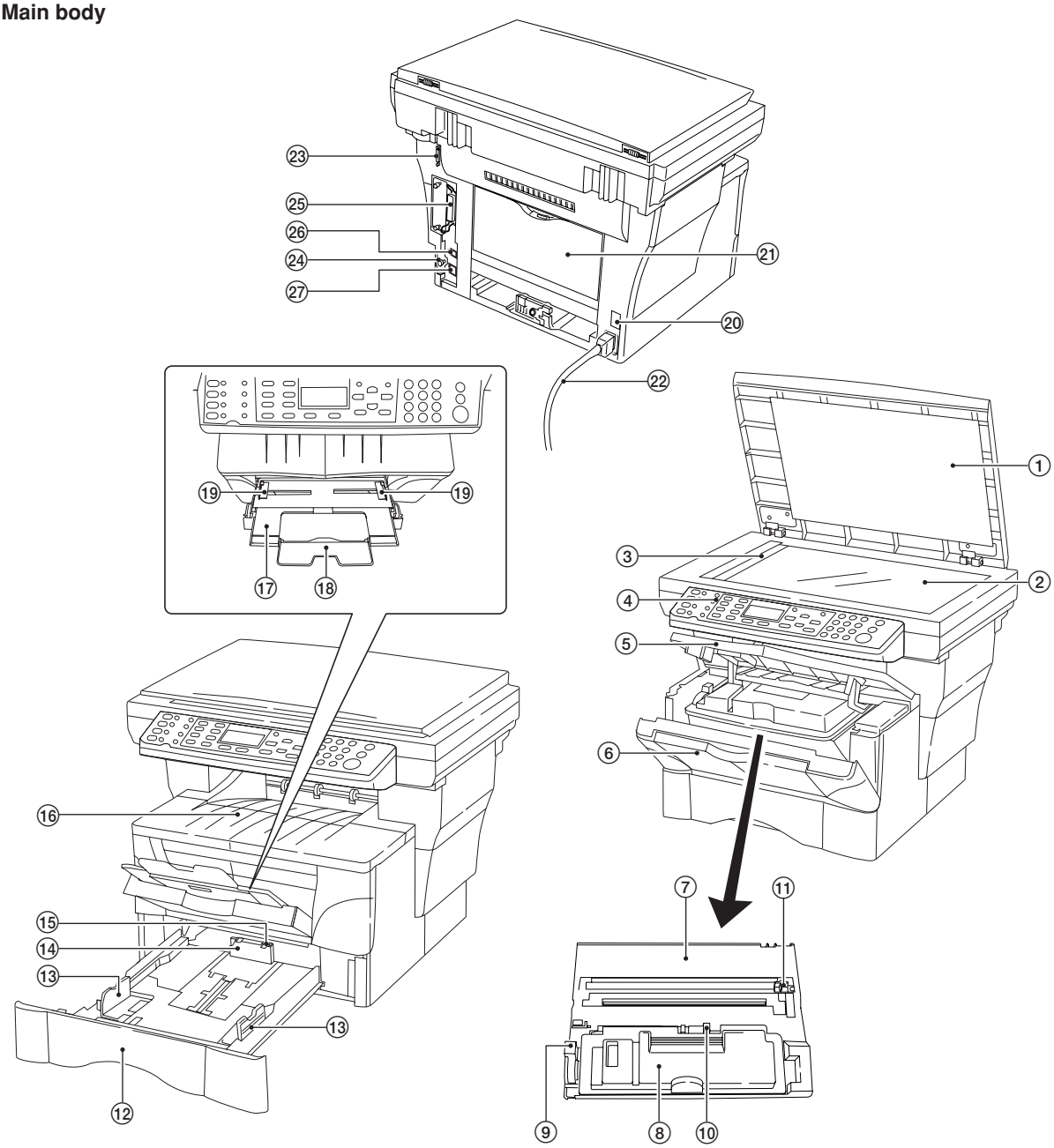

Figure 1-1-1 Names of parts

① Original cover
② Contact glass
③ Original size indicator plate
④ Operation panel
⑤ Front top cover
⑥ Front cover
⑦ Process unit
⑧ Toner container
⑨ Lock lever
⑩ Toner container release lever
⑪ Main charger cleaner
⑫ Cassette
⑬ Paper guide
⑭ Paper stopper
⑮ Stopper extension lock
⑯ Face-down output tray
⑰ MP tray
⑱ Extension tray
⑲ Paper width guides
⑳ Power switch
㉑ Face-up output tray
㉒ Power cord
㉓ DP interface connector
㉔ Memory cover
㉕ Parallel interface connector
㉖ USB interface connector
㉗ Network interface connector

TONER
www.tonerplus.com

(2) Operation panel

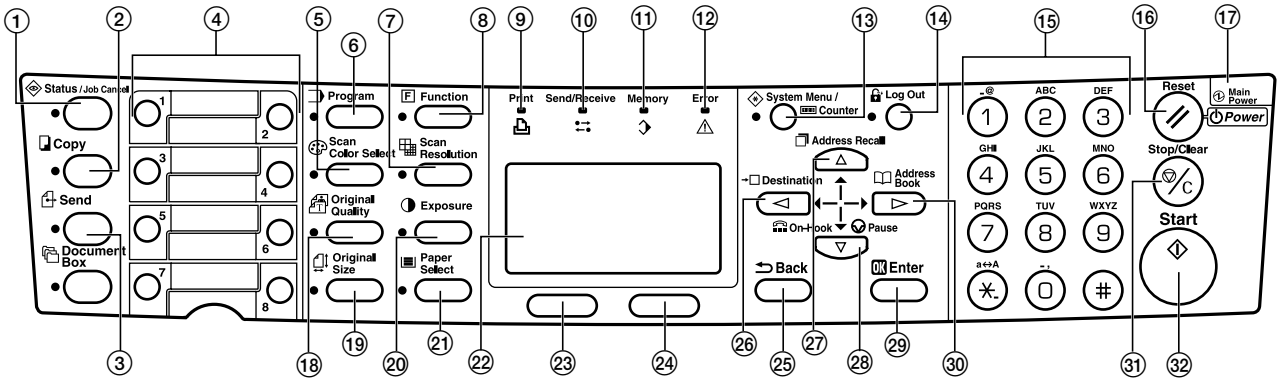

Figure 1-1-2

① Status/Job cancel key and indicator
② Copy key and indicator
③ Send key and indicator
④ One-touch keys (1 to 8)
⑤ Scan color select key and indicator
⑥ Program key and indicator
⑦ Scan resolution key and indicator
⑧ Function key and indicator
⑨ Print indicator
⑩ Send/Receive indicator
⑪ Memory indicator
⑫ Error indicator
⑬ System menu/Counter key and indicator
⑭ Log out key and indicator
⑮ Numeric keys
⑯ Reset/Power key
⑰ Main power indicator
⑱ Original quality key and indicator
⑲ Original size key and indicator
⑳ Exposure key and indicator
㉑ Paper select key and indicator
㉒ Message display
㉓ Left select key
㉔ Right select key
㉕ Back key
㉖ Left cursor key
㉗ Up cursor key
㉘ Down cursor key
㉙ Right cursor key
㉚ Enter key
㉛ Stop/Clear key
㉜ Start key and indicator

TONER
www.tonerplus.com.ua

1-2-1 Drum

Note the following when handling or storing the drum.

- When removing the process unit, never expose the drum surface to strong direct light.
- Keep the drum at an ambient temperature between 10 °C/50 °F and 32.5 °C/90.5 °F and at a relative humidity not higher than 80% RH. Avoid abrupt changes in temperature and humidity.
- Avoid exposure to any substance which is harmful to or may affect the quality of the drum.
- Do not touch the drum surface with any object. Should it be touched by hands or stained with oil, clean it.

1-2-2 Installation environment

1. Temperature: 10 - 32.5 °C/50 - 90.5 °F
2. Humidity: 20 - 80%RH
3. Power supply: 120 V AC, 7.8 A
   220 - 240 V AC, 4.0 A
4. Power source frequency: 50 Hz ±0.3%/60 Hz ±0.3%
5. Installation location
   - Avoid direct sunlight or bright lighting. Ensure that the photoconductor will not be exposed to direct sunlight or other strong light when removing paper jams.
   - Avoid extremes of temperature and humidity, abrupt ambient temperature changes, and hot or cold air directed onto the machine.
   - Avoid dust and vibration.
   - Choose a surface capable of supporting the weight of the machine.
   - Place the machine on a level surface (maximum allowance inclination: 1°).
   - Avoid air-borne substances that may adversely affect the machine or degrade the photoconductor, such as mercury, acidic of alkaline vapors, inorganic gasses, NOx, SOx gases and chlorine-based organic solvents.
   - Select a room with good ventilation.
6. Allow sufficient access for proper operation and maintenance of the machine.
   Machine front: 1000 mm/39$^{3}/_{8}$" Machine rear: 300 mm/11$^{13}/_{16}$"
   Machine right: 300 mm/11$^{13}/_{16}$" Machine left: 300 mm/11$^{13}/_{16}$"

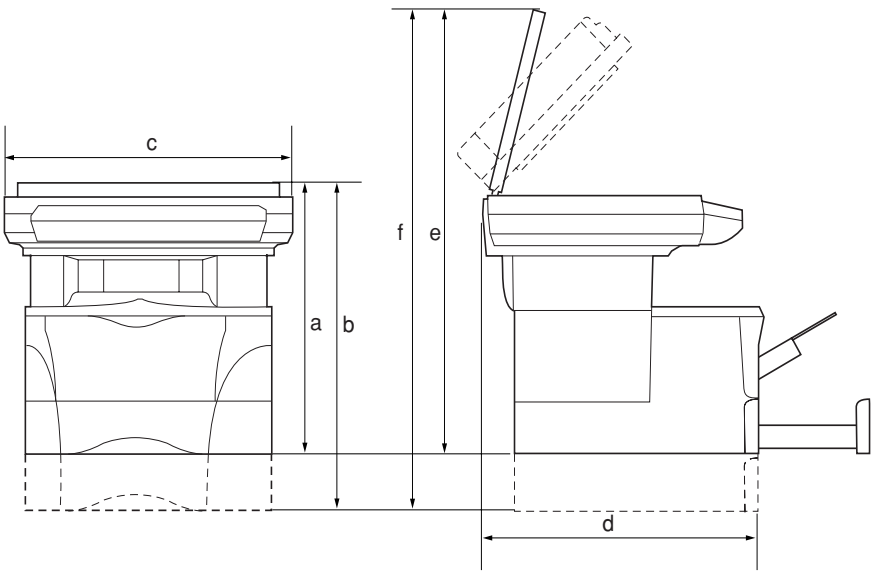

a: 385 mm/15$^{3}/_{16}$"
b: 460 mm/18$^{1}/_{8}$"
c: 496 mm/19$^{9}/_{16}$"
d: 421 mm/16$^{5}/_{8}$"
e: 665 mm/26$^{3}/_{16}$"
f: 740 mm/29$^{3}/_{16}$"

Figure 1-2-1 Installation dimensions

TONER
www.tonerplus.com.ua

1-3-1 Unpacking and installation

(1) Installation procedure

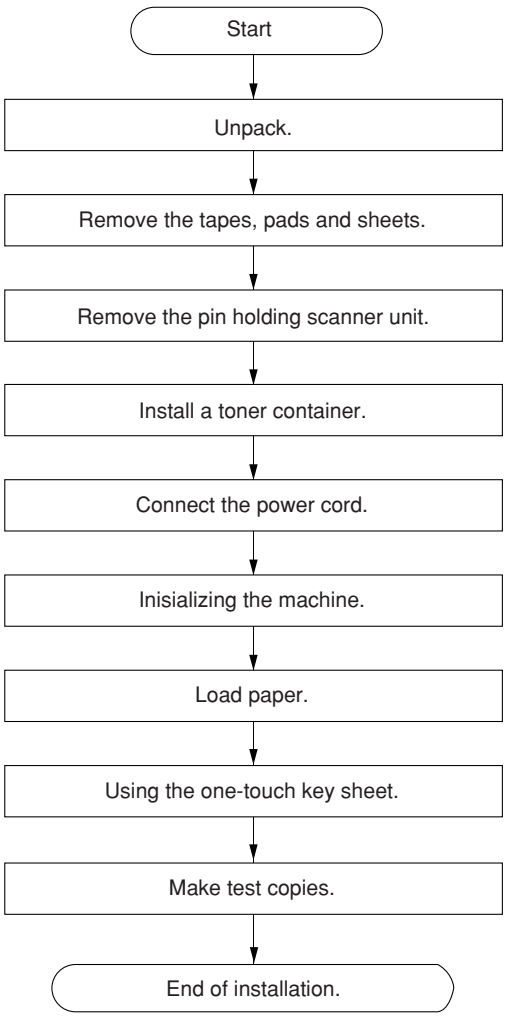

TONER
www.tonerplus.com.ua

Unpack.

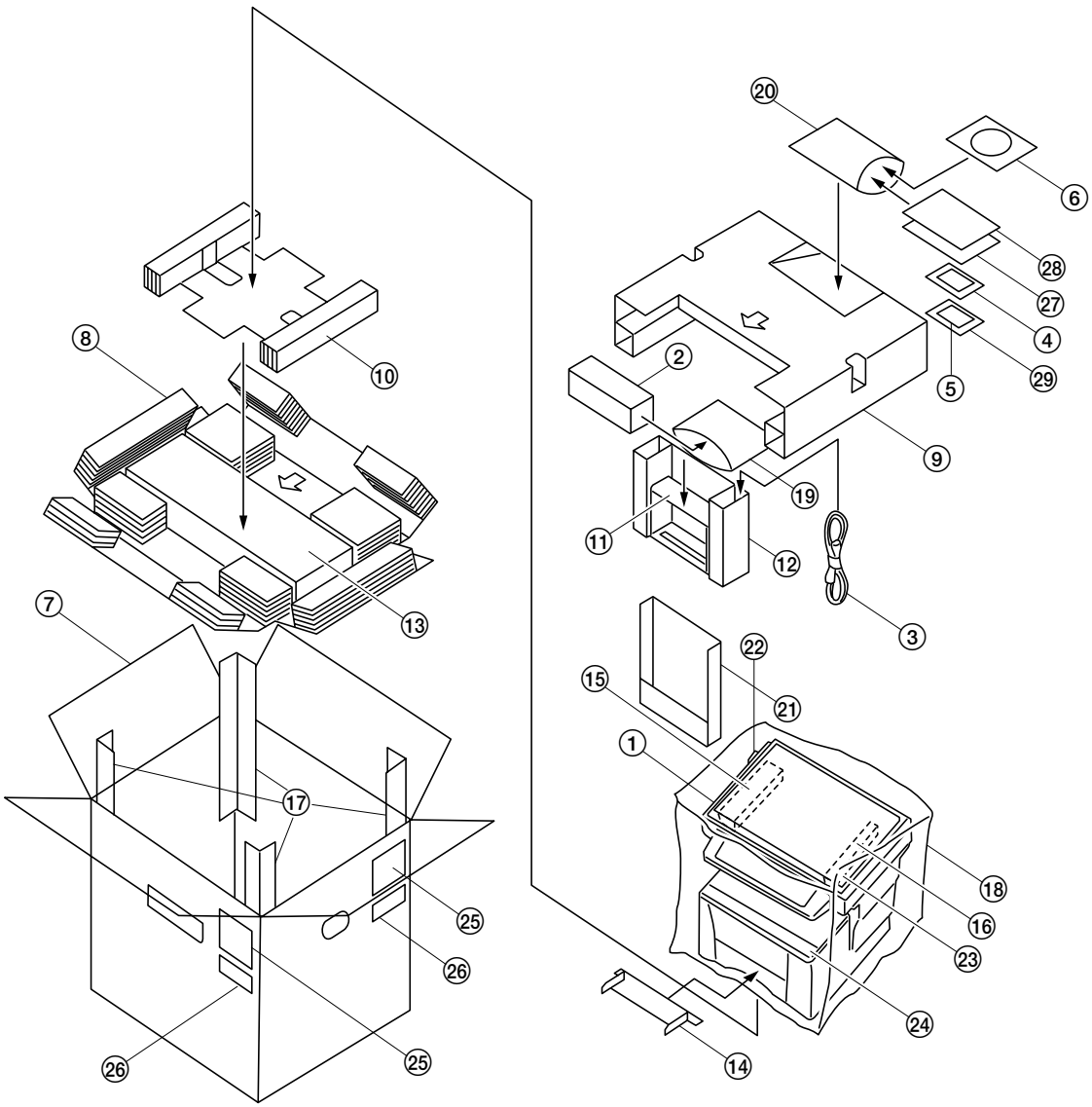

Figure 1-3-1 Unpacking

① Main body
② Toner container
③ Power cord
④ Cleaning cloth
⑤ One-touch key sheet
⑥ CD ROM
⑦ Outer case
⑧ Bottom pad
⑨ Upper pad
⑩ Side pad
⑪ Front spacer
⑫ Front pad
⑬ Bottom spacer
⑭ Cassette spacer
⑮ Left pad
⑯ Right pad
⑰ Corner supports
⑱ Products cover
⑲ Plastic bag
⑳ Plastic bag
㉑ Pocket spacer
㉒ Paper tag
㉓ Top sheet
㉔ Output tray sheet
㉕ Bar code labels
㉖ Label
㉗ Operation guide
㉘ Installation guide
㉙ Plastic bag

TONER
www.tonerplus.com.ua

CAUTIONS

- Be sure to hold both the front and rear sides of the machine when carrying it, as shown in the illustration.
- Be sure not to pull the cassette out when holding the front of the machine.
- Be sure that the original cover is closed whenever transporting the machine.
- Do not attempt to carry the machine by holding only the top portion. Doing so may result in you dropping the machine and thereby damaging the machine and/or its covers.

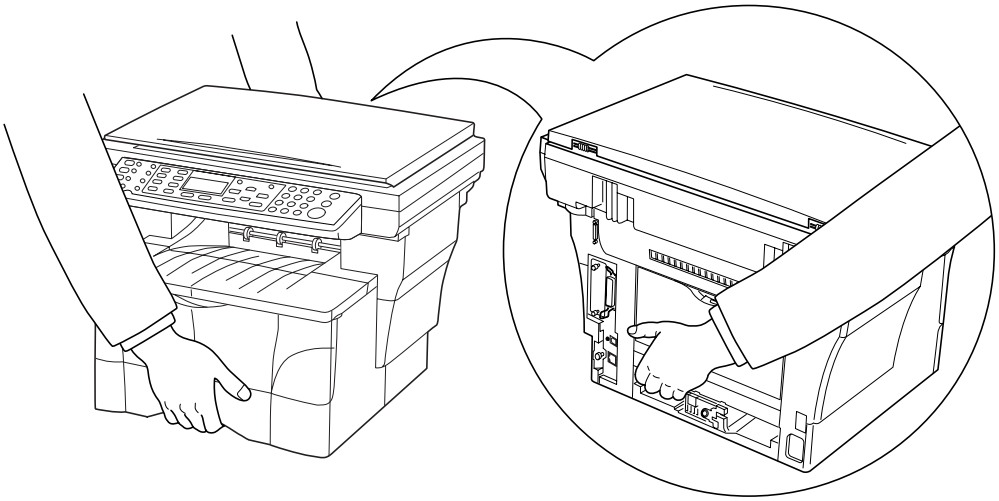

Figure 1-3-2

TONER
www.tonerplus.com.ua

Remove the tapes, pads and sheets.

1. Remove the sheet and the two tapes.

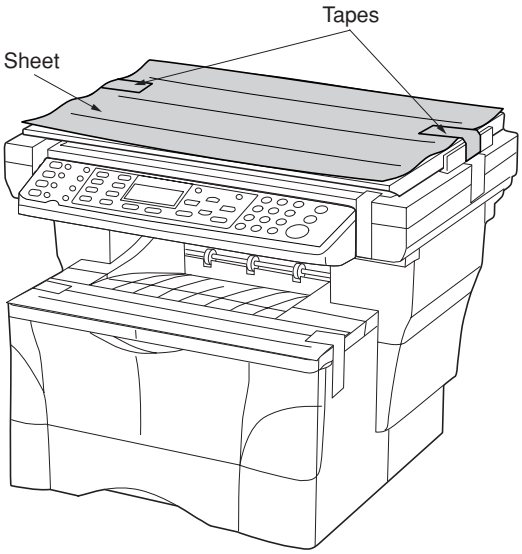

Figure 1-3-3

2. Open the original cover.

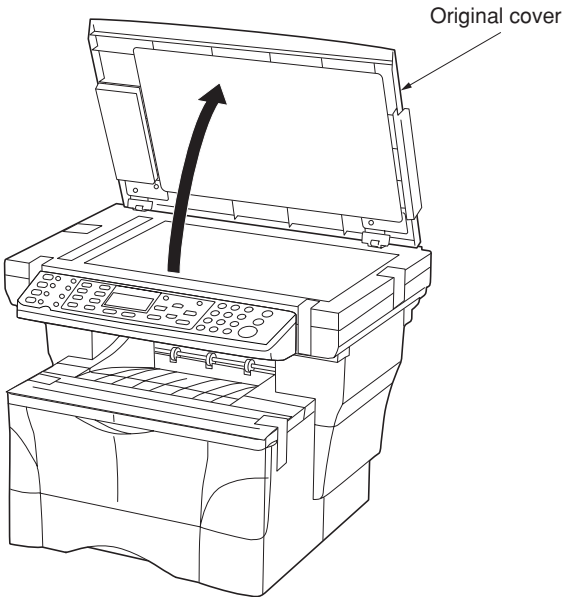

Figure 1-3-4

TONER
www.tonerplus.com.ua

3. Remove the eight tapes, the two pads and the sheet.

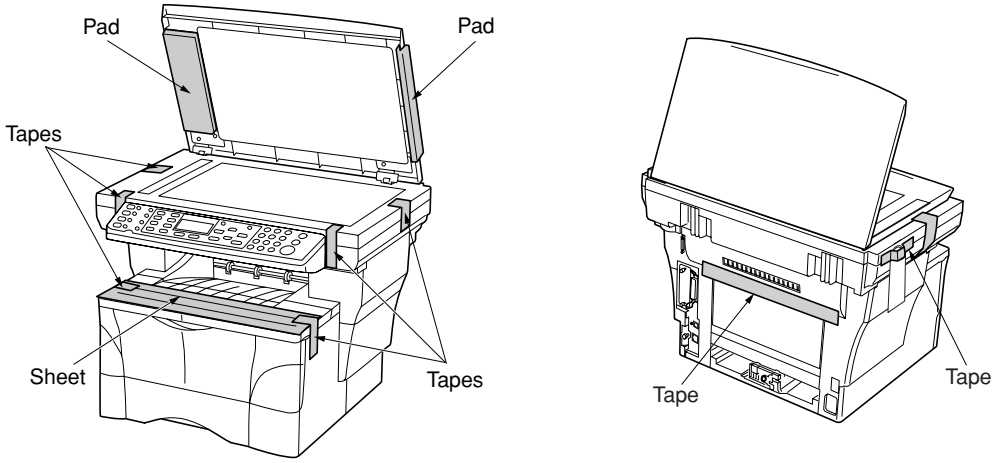

Figure 1-3-5

4. Pull the cassette out of the machine.

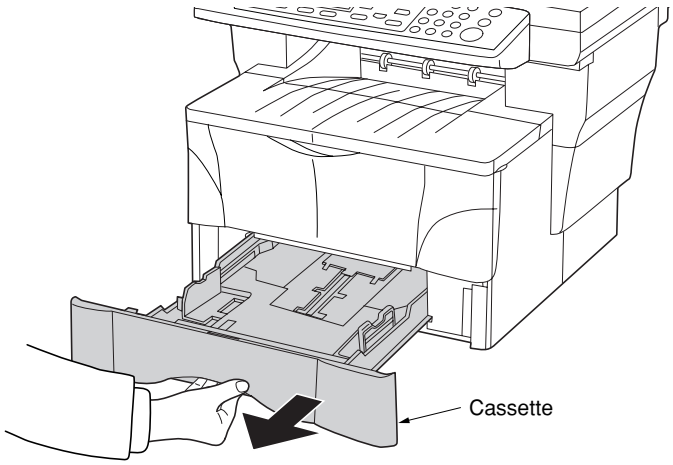

Figure 1-3-6

5. Remove the cassette spacer from inside the cassette.

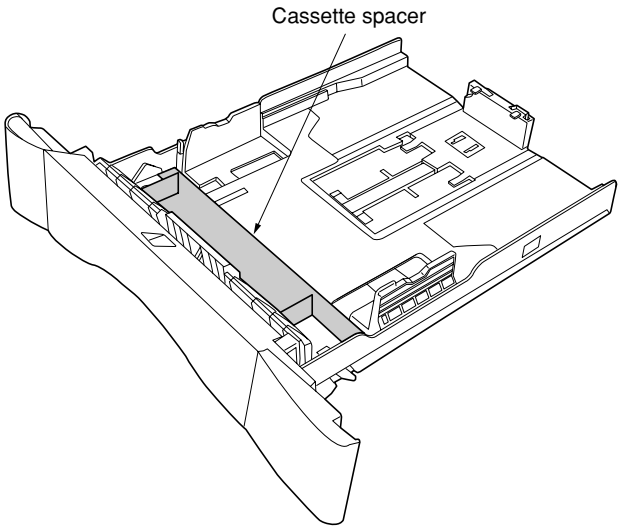

Figure 1-3-7

TONER
www.tonerplus.com.ua

Remove the pin holding scanner unit.

1. Remove the yellow pin for scanner unit and the paper tag from the left side of the machine.

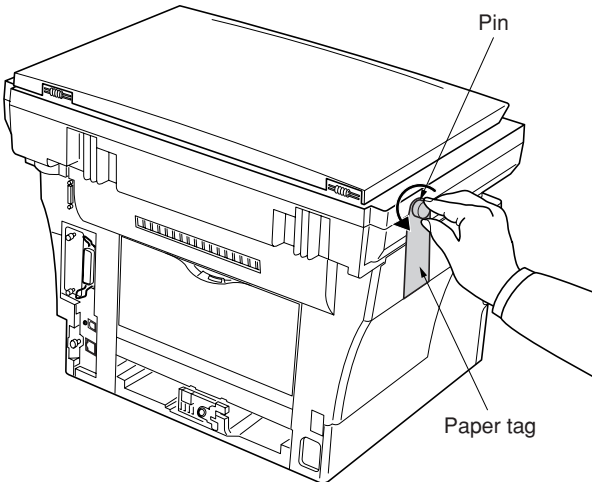

Figure 1-3-8

Install a toner container.

1. Open the front top cover and front cover.

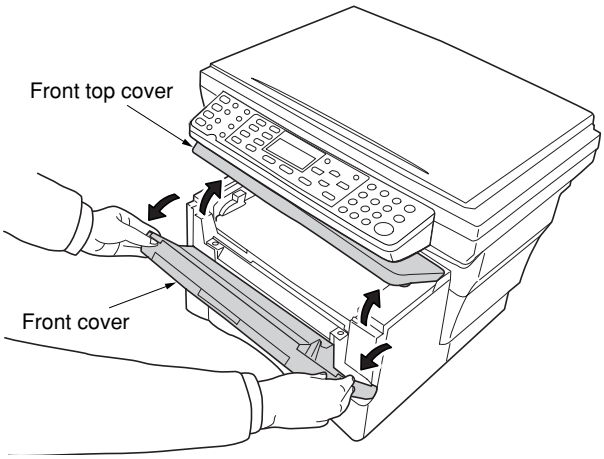

Figure 1-3-9

2. Store the pin for scanner unit on the inside of the front cover as shown in the illustration.
   * Be sure to save this pin as it is essential that it be used whenever the machine is moved. The location for storing the pin is clearly marked on the right side of the inside portion of the front cover.

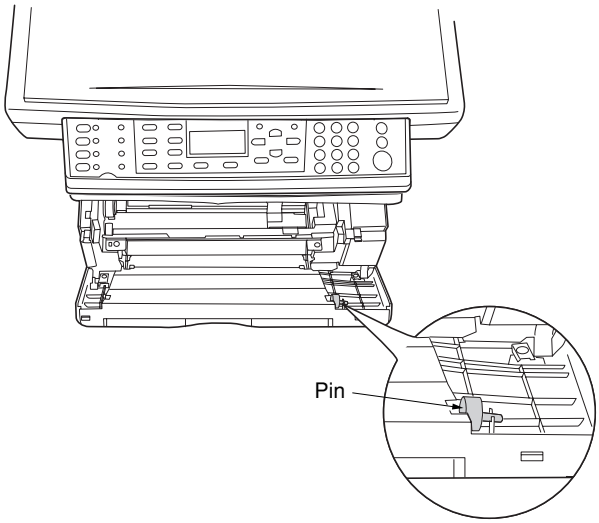

Figure 1-3-10

TONER
www.tonerplus.com.ua

3. Remove the process unit from the machine.

CAUTIONS
- Place the process unit on a clean, level surface.
- Never expose the process unit to any sort of impact or shock.
- The drum in the process unit is sensitive to light. Never expose the drum even to normal office lighting (500 lux) for more than five minutes.

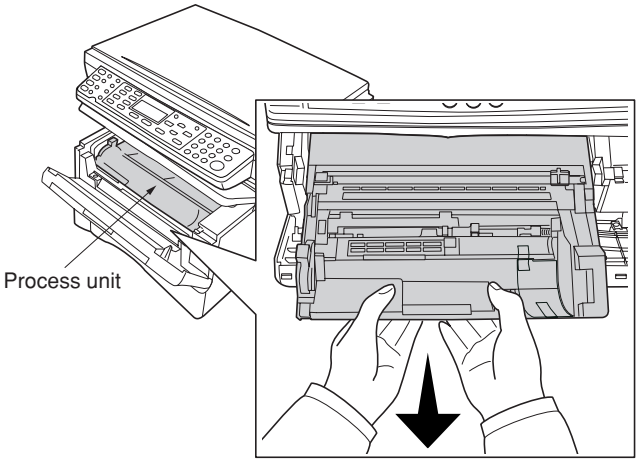

Figure 1-3-11

4. Remove the protective cardboard.

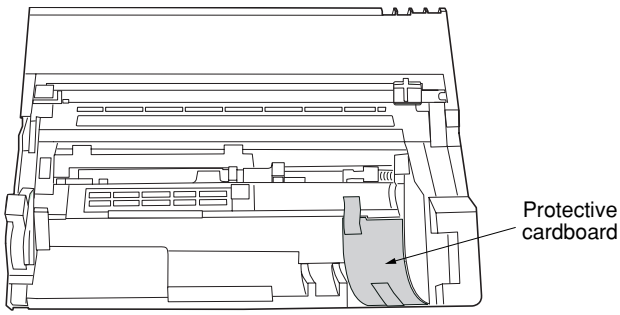

Figure 1-3-12

5. Move the lock lever until it is in its unlocked position (marked UNLOCK).

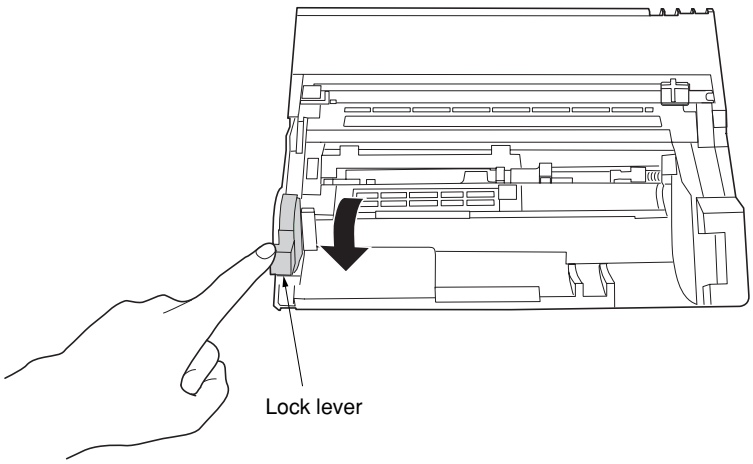

Figure 1-3-13

TONER
www.tonerplus.com.ua

6. Shake the toner container horizontally back and forth five or six times so that the toner inside of it becomes evenly distributed.

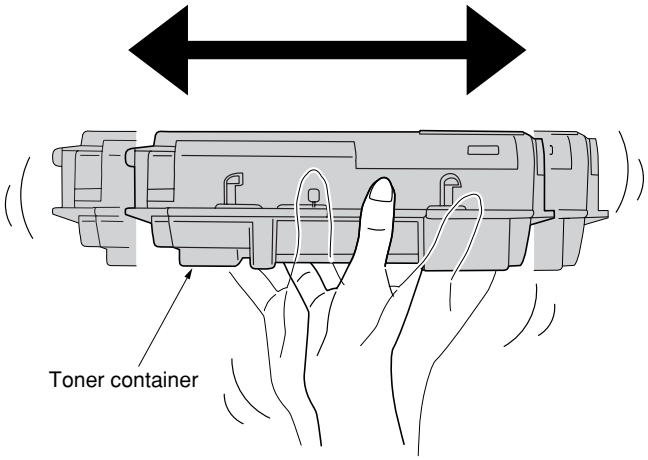

Figure 1-3-14

7. Remove the orange protective seal.

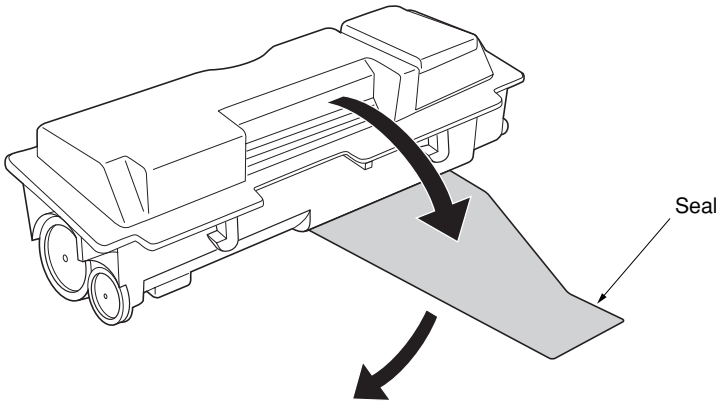

Figure 1-3-15

8. Align the knob on the left side of the container with the groove in the process unit and set the toner container into the process unit.

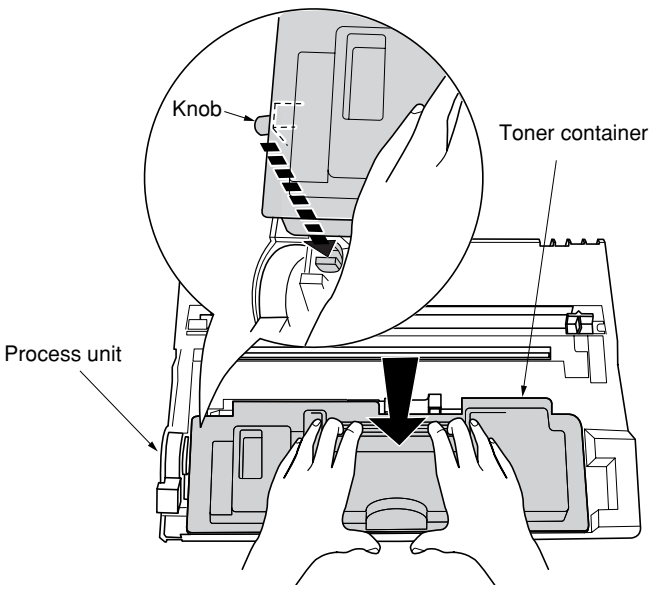

Figure 1-3-16

TONER
www.tonerplus.com.ua

9. Hold the process unit stable and push on the areas marked PUSH HERE on the toner container until the container clicks into place.

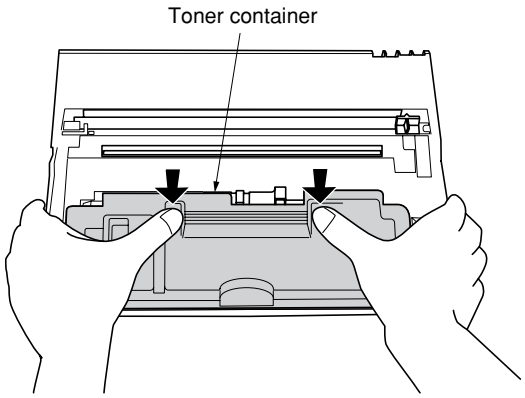

Figure 1-3-17

10. Push the lock lever back into its locked position.

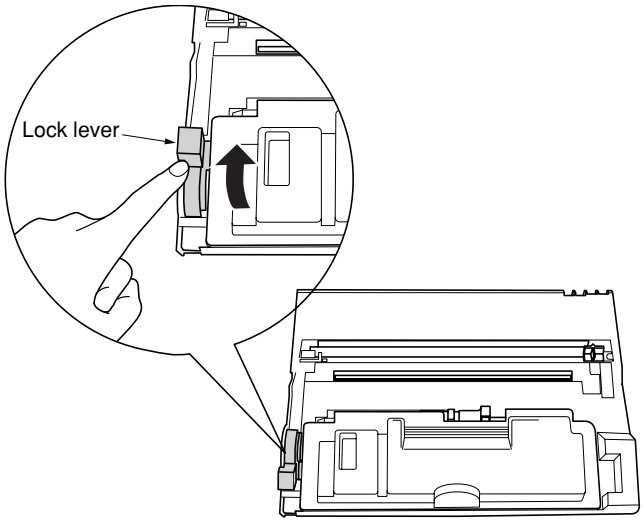

Figure 1-3-18

11. Set the process unit into the machine by aligning the pins on both sides of the process unit with the guides inside the machine, and then slide the process unit all the way back into the machine until it stops.

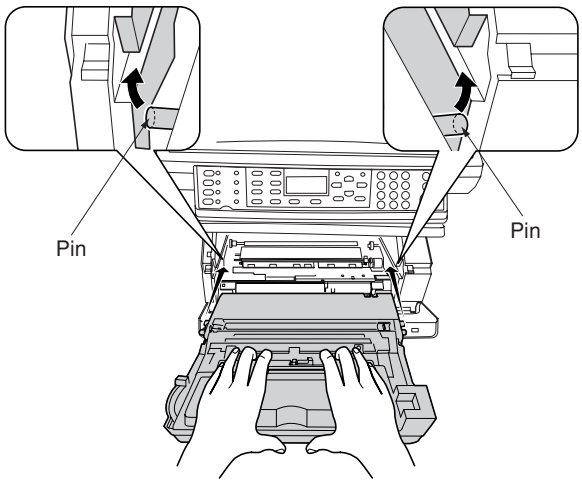

Figure 1-3-19

TONER
www.tonerplus.com.ua

12. Close the front cover.

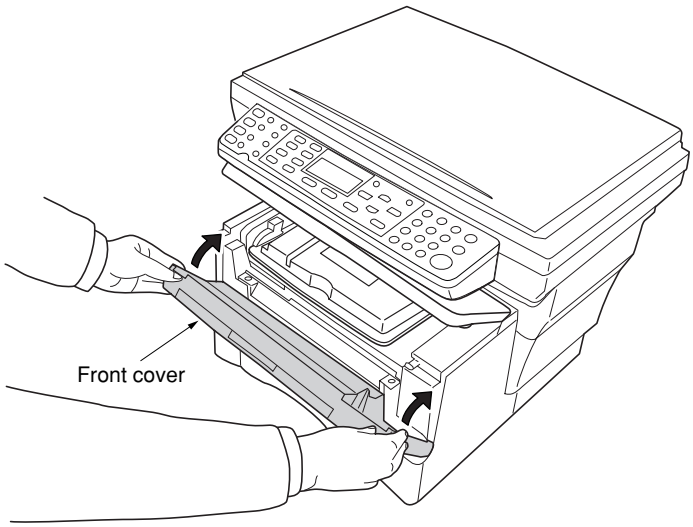

Figure 1-3-20

13. Close the front top cover.

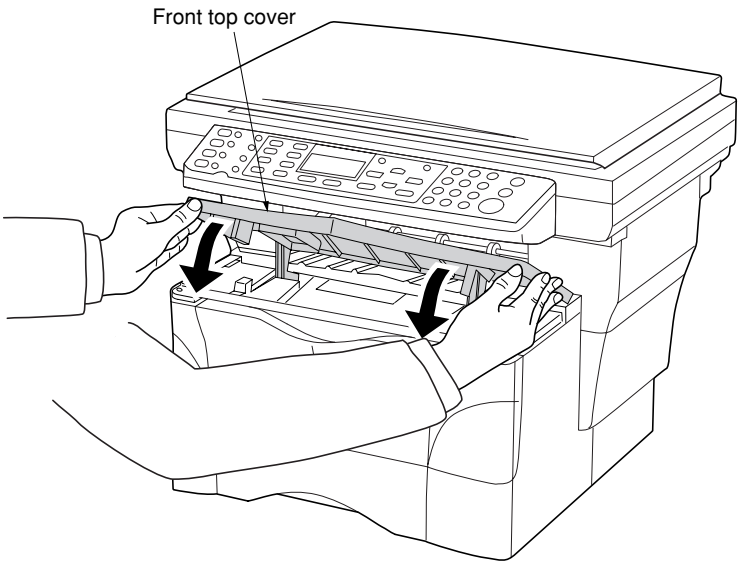

Figure 1-3-21

TONER
www.tonerplus.com.ua

Connect the power cord.

1. Connect the power cord.

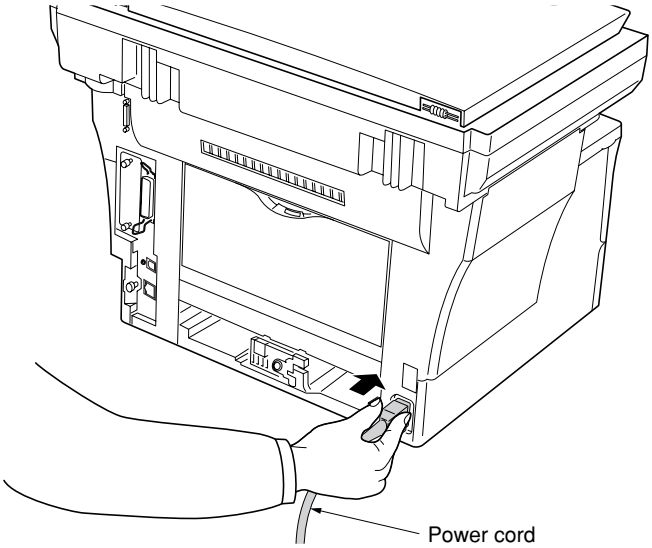

Figure 1-3-22

Initializing the machine.

1. Turn the power switch to the machine ON (|).

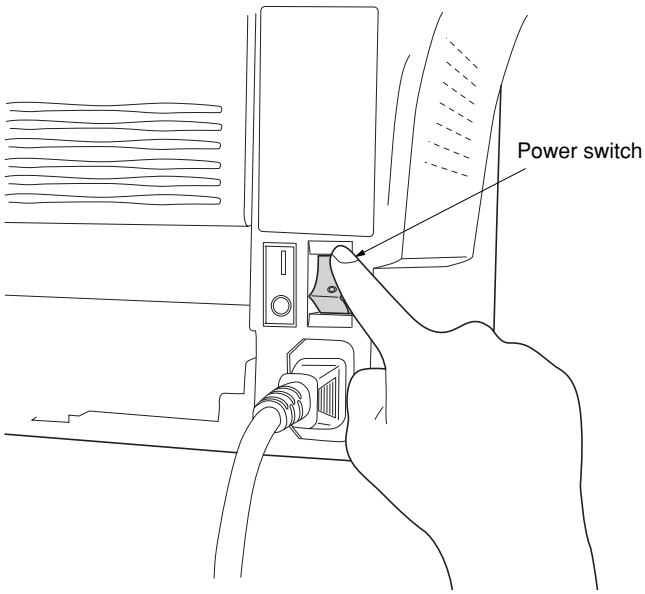

Figure 1-3-23

The machine will begin replenishing the toner. Wait until it has completed that operation. (15 minutes)
Once the toner has been replenished and the machine is once again in a ready-to-use state, Ready to copy will appear on the message display and the Start indicator will light green.

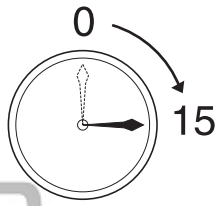

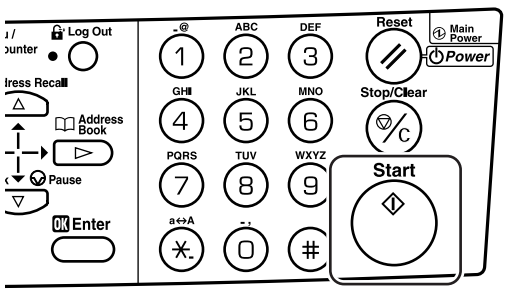

Figure 1-3-24

TONER
www.tonerplus.com.ua

Load paper.

1. Pull the cassette out of the machine.

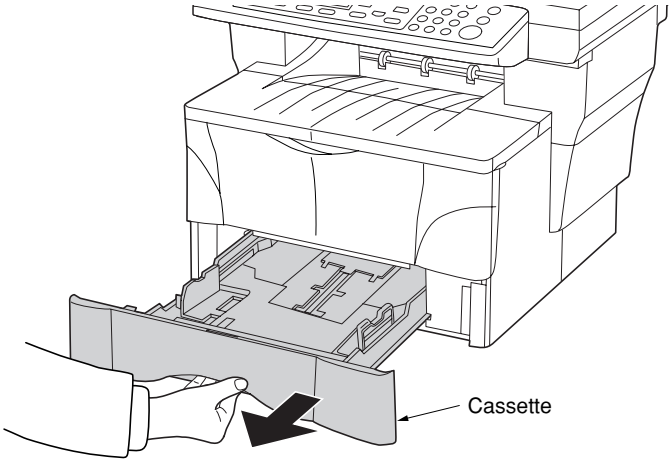

Figure 1-3-25

2. Adjust the paper stopper in the rear portion of the cassette to fit the size of the paper being loaded there by pressing in on the release buttons and sliding the paper stopper to the corresponding paper size.

NOTES

- The paper sizes are marked on the bottom of the cassette.
- The default factory setting is for A4/Letter size paper.

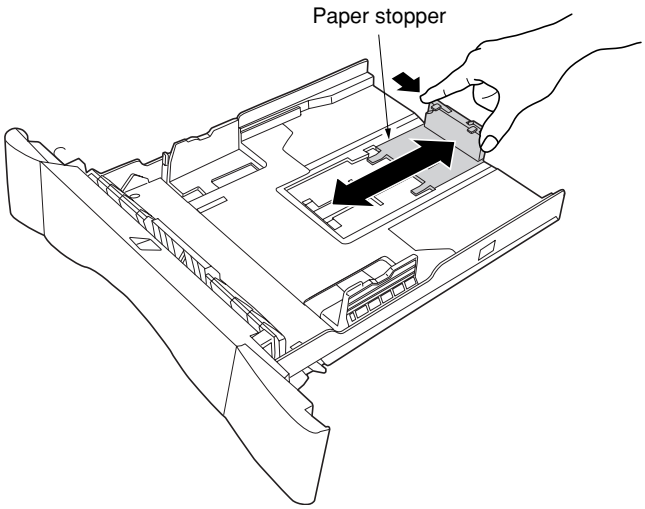

Figure 1-3-26

Adjusting the paper stopper for Folio or Oficio II size paper

1) Remove the stopper extension lock from the paper stopper.
2) Slide the paper stopper towards the rear of the cassette until the grooves that are cut into the paper stopper are aligned with the rear edge of the cassette.
3) Insert the stopper extension lock into the holes in the paper stopper, as shown in the illustration.

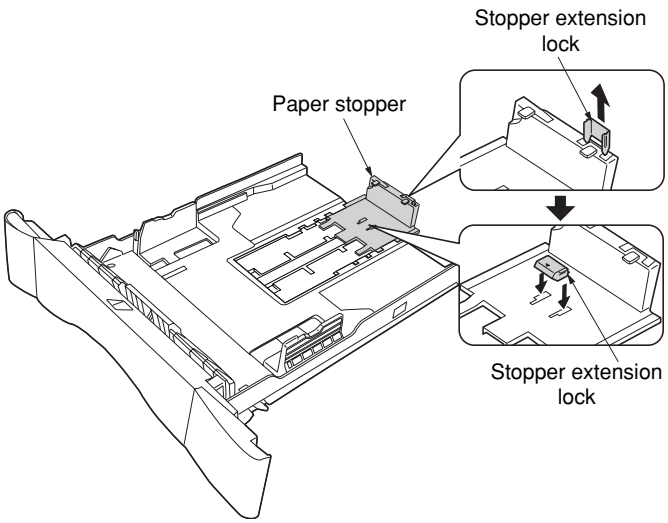

Figure 1-3-27

TONER
www.tonerplus.com.ua

4) Press down on the stopper extension lock and slide the paper stopper towards the rear of the cassette to set the lock into place.
The paper stopper is in position for Folio and Oficio II size paper.

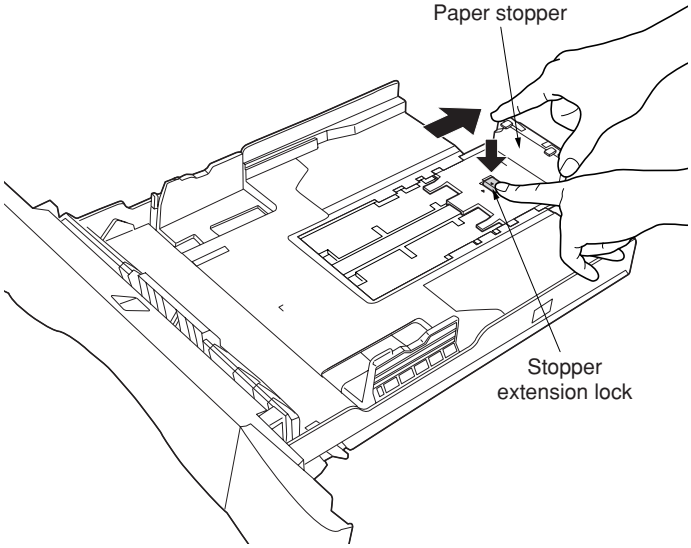

Figure 1-3-28

3. Adjust the paper width guides by pressing in on the release buttons and sliding the guides to fit the width of the paper being loaded in the cassette.

NOTES

- The paper sizes are marked on the bottom of the cassette.
- The default setting is for A4/Letter size paper.

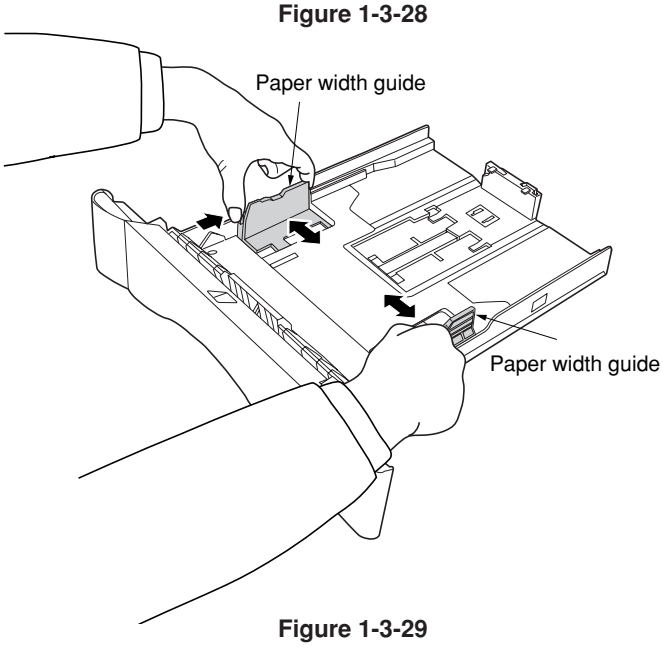

Figure 1-3-29

4. Set the paper in the cassette so that the leading edge is aligned against the paper stopper, but making sure that none of the paper gets caught on the overhanging tabs.

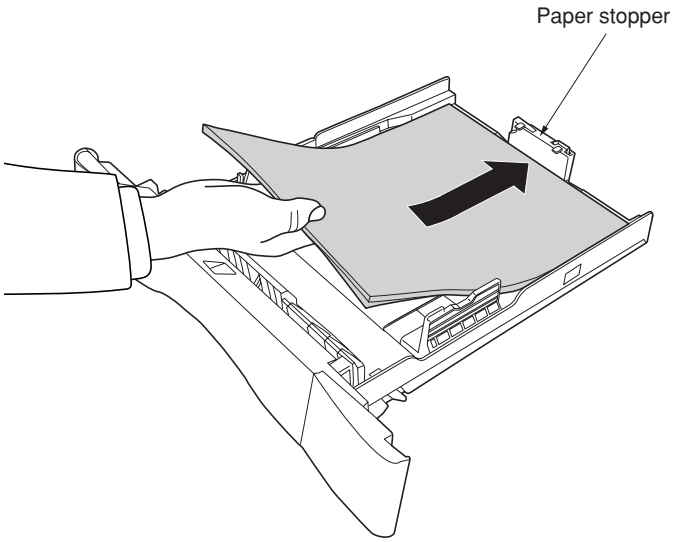

Figure 1-3-30

TONER
www.tonerplus.com.ua

NOTES

- Always adjust the paper stopper and paper width guides before loading paper into the cassette. Failure to do so may result in skewed paper feed and/or a paper jam.
- Make sure that the paper is set securely against the paper stopper and the paper width guides. If there is any gap between the paper and the stopper or guides, readjust the paper stopper and/or the paper width guides, as appropriate.
- When you are loading paper into the cassette, make sure that the side to be copied or printed onto is facing downward.
- Be sure to load paper so that it is not folded or curled, etc.
- Do not load more paper than indicated by the lines located on the width guides.

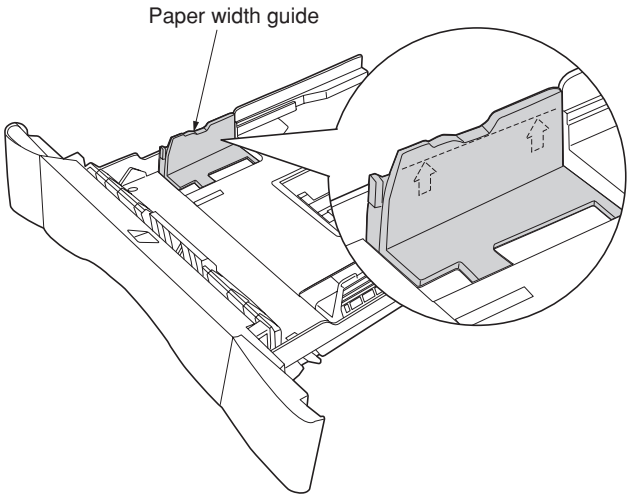

Figure 1-3-31

5. Push the cassette securely all the way back into the machine until it stops.

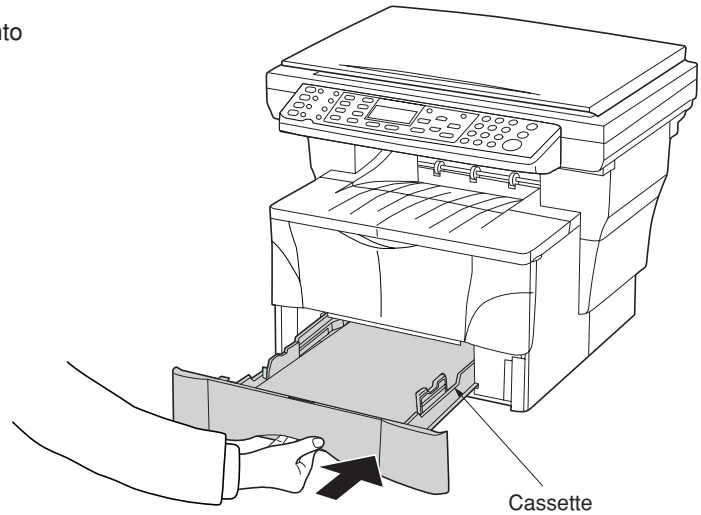

Figure 1-3-32

TONER
www.tonerplus.com.ua

Using the one-touch key sheet.

1. Remove the one-touch key sheet from bottom side of the operation panel.

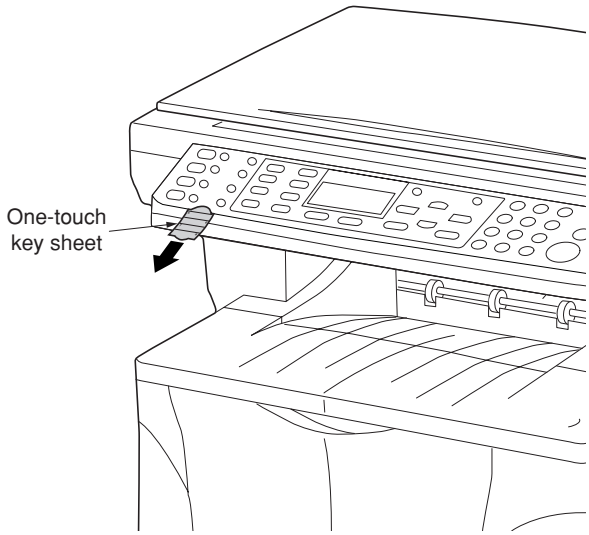

Figure 1-3-33

2. Enter the information for the registered destinations onto the one-touch key sheet. (There are 4 spare one-touch key sheets included with this machine.)
3. Insert the sheet back between the one-touch keys from the bottom side of the operation panel.

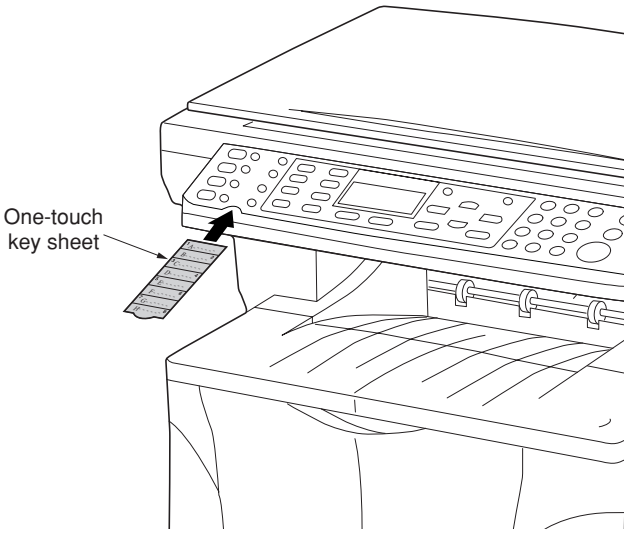

Figure 1-3-34

Make test copies.

End of installation.

TONER
www.tonerplus.com.ua

1-3-2 Connecting the cables

(1) Connecting the network cable

To connect the machine to a network, use an network cable (10Base-T or 100Base-TX).

Procedure

1. Turn the power switch located on the rear side of the machine off (O), and remove the power cord from the outlet.

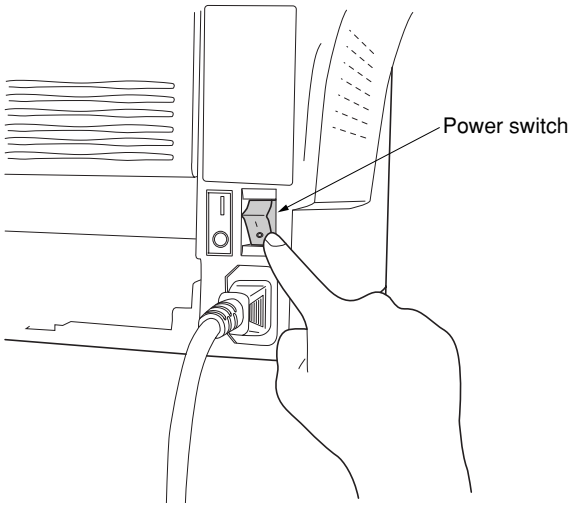

Figure 1-3-35

2. Connect the network cable to the network connector at the rear side of the machine.
3. Connect the other end of the network cable to network device (hub).
4. Make network settings.

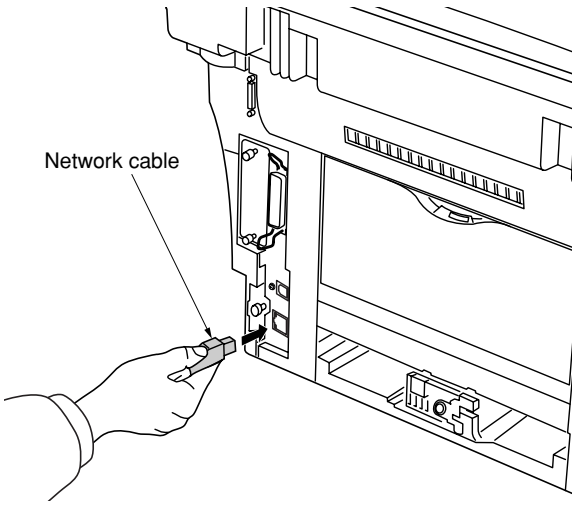

Figure 1-3-36

TONER
www.tonerplus.com.ua

(2) Connecting the printer cable

To connect the machine directly to your computer, use either a parallel cable or USB cable.

Procedure

1. Turn the power switch located on the rear side of the machine off (O), remove the power cord from the outlet and turn the power off to computer.

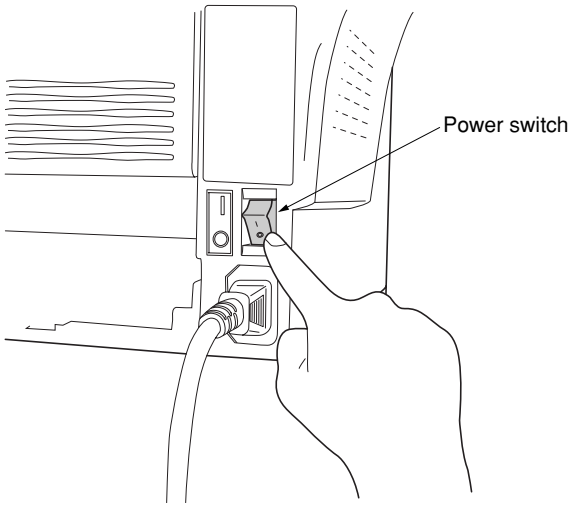

Figure 1-3-37

2. Connect the printer cable to the parallel interface connector or USB interface connector located at the rear side of the machine.
3. Connect the other end of the printer cable to the parallel interface connector or USB interface connector on computer.

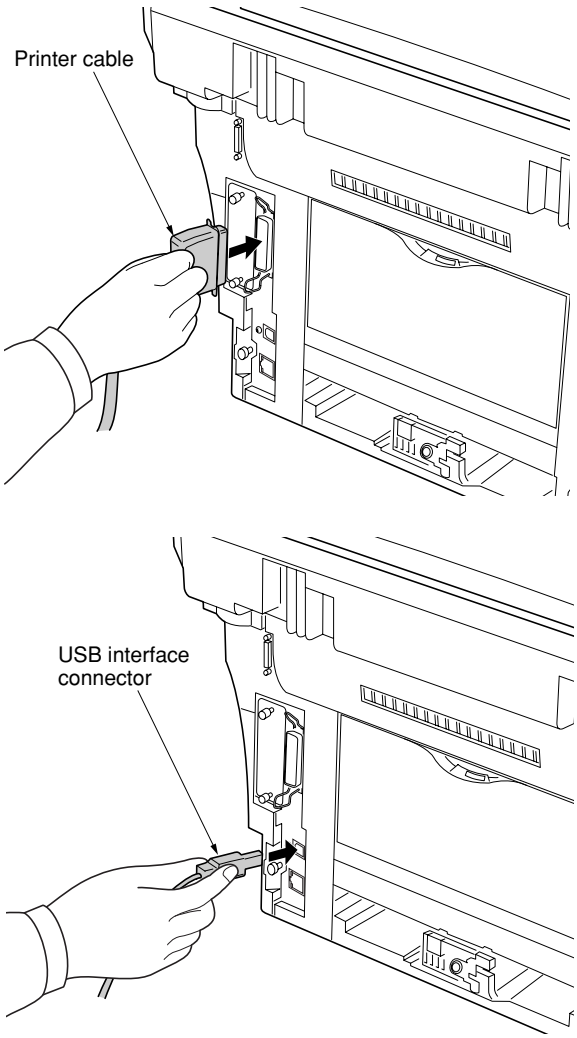

Figure 1-3-38

TONER
www.tonerplus.com.ua

1-3-3 Installing the document processor (option)

Procedure

1. Remove all of the components to the document processor from the box.
   CAUTION
   Be sure to hold both sides of the document processor when carrying it, as shown in the illustration.
   Be particularly careful NOT to touch the guide film or the thin white surface indicated by the Ⓐ in the illustration.

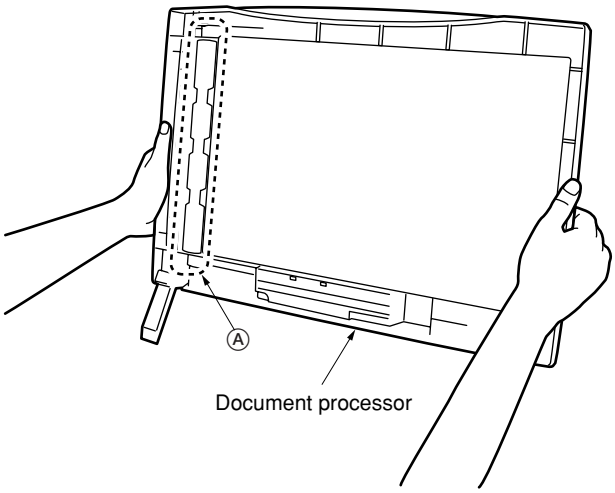

Figure 1-3-39

2. Turn the power switch located on the rear side of the machine off (O). Disconnect the power cord.

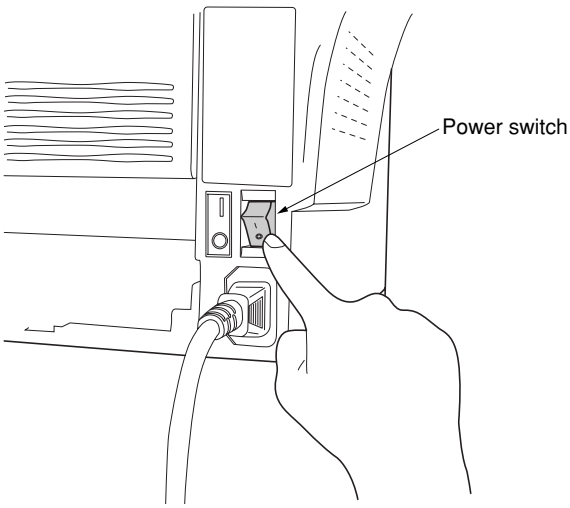

Figure 1-3-40

3. Open the original cover and lift it upward to remove it from the machine.

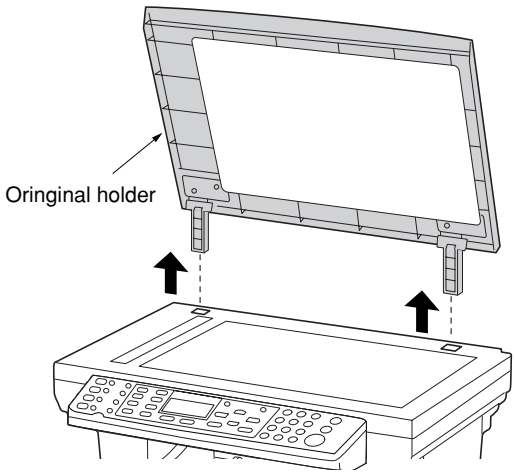

Figure 1-3-41

TONER
www.tonerplus.com.ua

4. Attach the document processor to the machine.
   CAUTION
   Be sure that the connection cable does not get caught between the document processor and the machine when attaching the document processor to the machine.

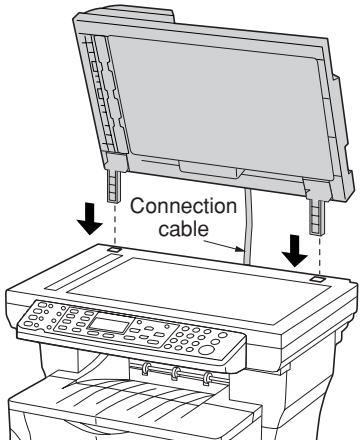

Figure 1-3-42

5. Gently close the document processor.

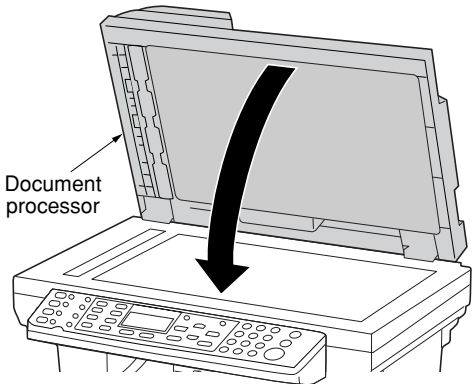

Figure 1-3-43

6. Attached the open end of the connection cable to the connector on the machine.

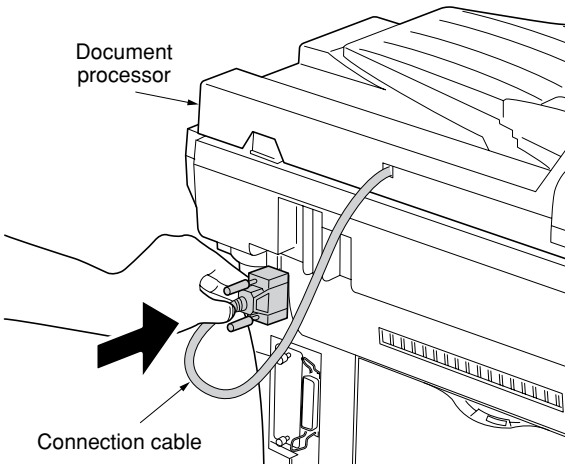

Figure 1-3-44

TONER
www.tonerplus.com.ua

CAUTION
Be sure to tighten the pins securely when connecting the cable.

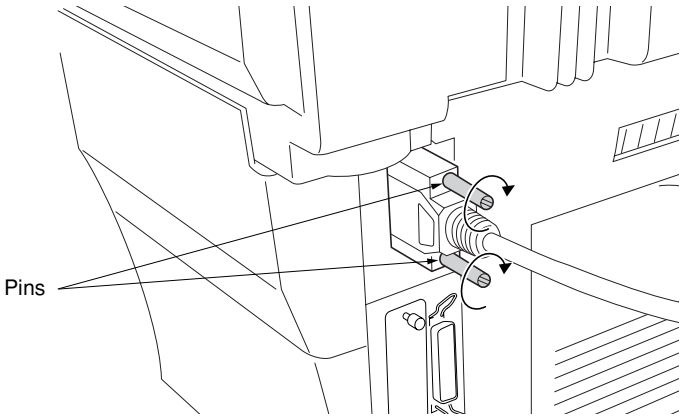

Figure 1-3-45

7. Connect the power cord and turn the power switch on (|). Warm up will begin. 1 will appear on the operation panel and the start indicator will light when the machine is in a ready state.

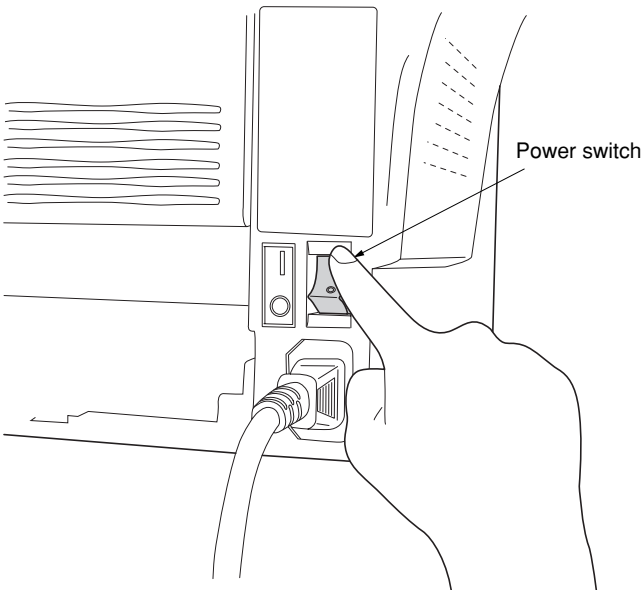

Figure 1-3-46

TONER
www.tonerplus.com.ua

1-3-4 Installing the expanding memory (option)

The main PWB of the machine is equipped with one socket for memory expansion. Expansion memory is available in the form of DIMM (Dual In-line Memory Module).

CAUTION
Take precautions that no foreign substances such as metal chips or liquid get inside the machine during the installation process. Operation of the machine during the presence of a foreign substance may lead to fire or electric shock.

WARNING
Turn the power switch off. Disconnect the power cord.

Procedure

1. Remove the screw and then remove the memory cover.
3. Open the clips on both ends of the DIMM socket.
4. Insert the DIMM into the DIMM socket so that the notches on the DIMM align with the corresponding protrusions in the slot.
5. Close the clips on the DIMM slot to secure the DIMM.

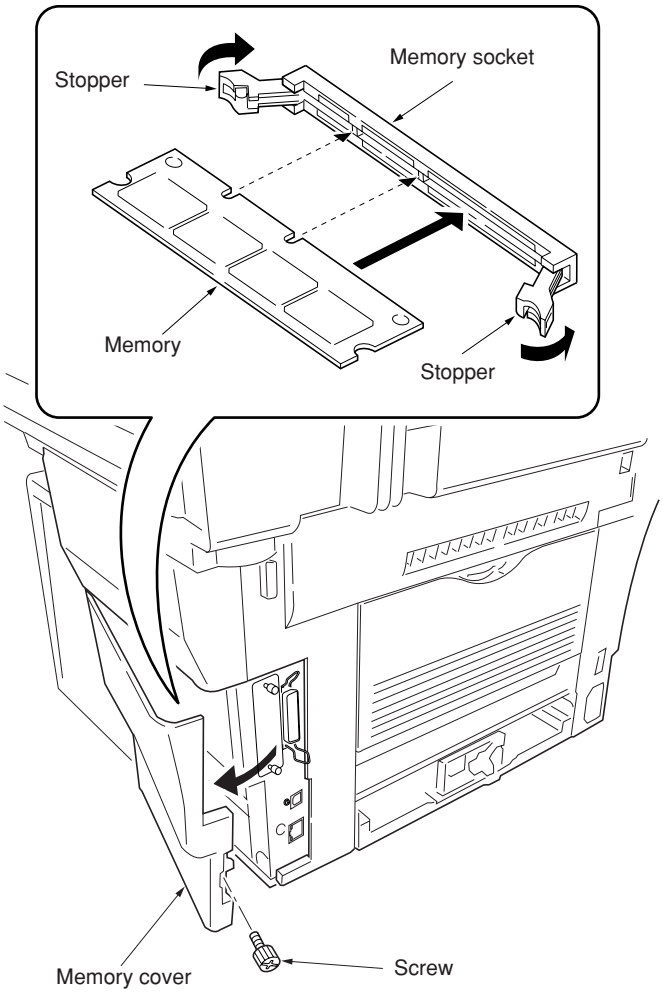

Figure 1-3-47 Inserting the DIMM

TONER
www.tonerplus.com.ua

1-3-5 Installing the fax system (option)

Turn the machine's power switch to OFF and unplug the machine from the power supply before installing the fax system.

Precautions for handling the FAX assembly
The FAX assembly is delivered in an antistatic air-padded bag. To prevent any damage, briefly touch a large metal object to ensure discharge of static electricity before removing the FAX assembly from the bag.
Hold the FAX assembly by the metal plate on front as shown. Do not touch the circuits or electronic components on the PWB.

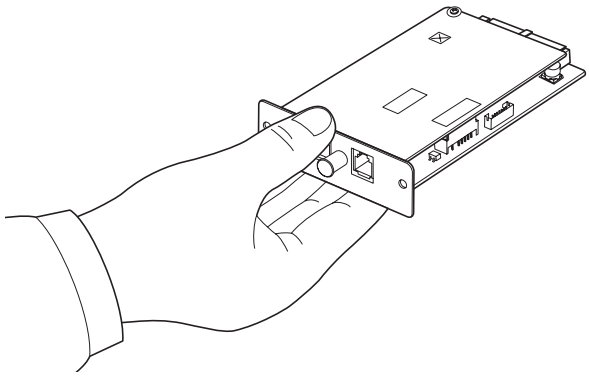

Figure 1-3-48

Procedure

1. On the rear of the machine, remove two screws and then remove the plate.

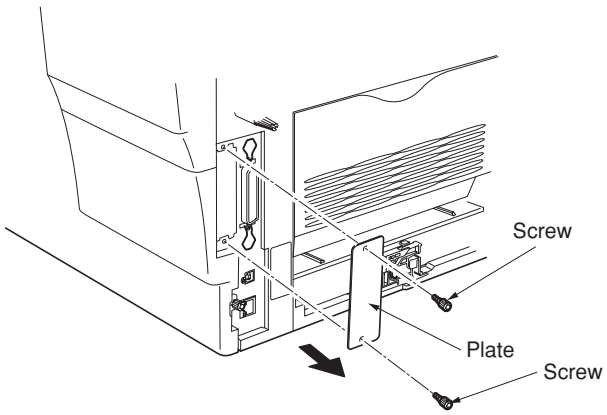

Figure 1-3-49

2. Insert the FAX assembly along the rail in the machine until it clicks in place. Attach the fax assembly using two screws from step 1.
IMPORTANT: When inserting the FAX assembly, slide it slowly and firmly all the way in.

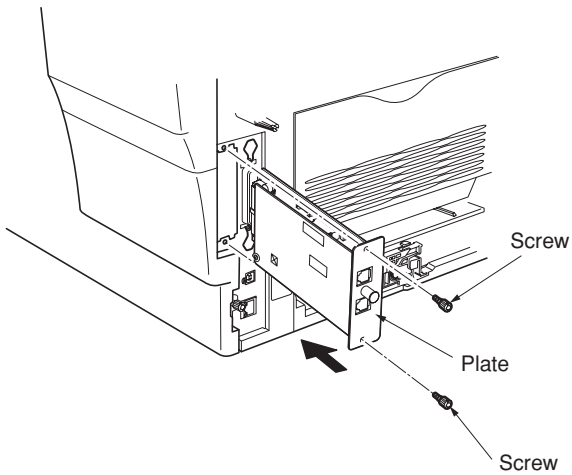

Figure 1-3-50

TONER
www.tonerplus.com.ua

3. Connect the modular cord to the line jack.
   120 V specifications: Connect the modular cord with the attached ferrite core to the machine.

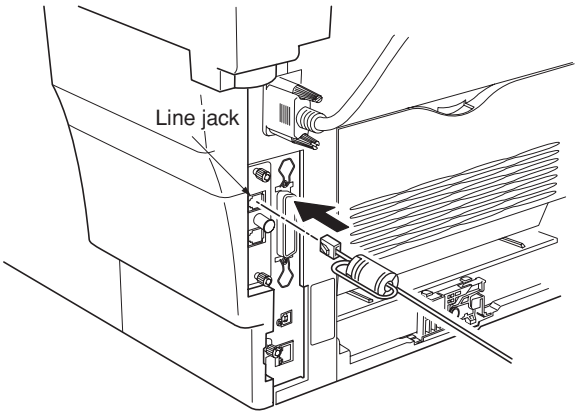

Figure 1-3-51

220-240 V specifications only

4. Attach the core to the power cord of the machine so that the stopper section is located near the power plug as shown in the illustration.

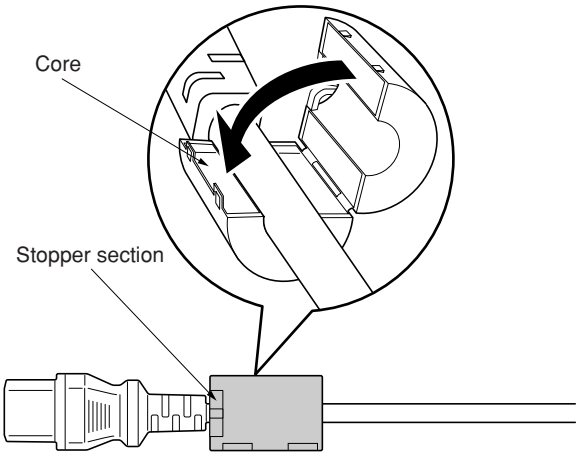

Figure 1-3-52

5. Plug the power cord into the machine. Turn the machine on.
   NOTE (120 V specifications only)
   When connecting a separate phone to the machine, attach the ferrite core to the modular cord before connection. Loop the modular cord through the ferrite core.

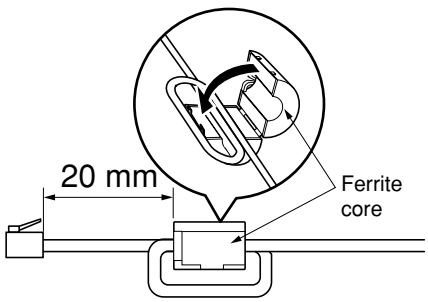

Figure 1-3-53

TONER
www.tonerplus.com.ua

Initialization procedure after installation of fax system

1. Insert the machine power plug to the wall outlet and turn the power switch on.
2. Run maintenance item U601.
3. Enter a destination code using the numeric keys (refer to the destination code list) and then press the enter key.
   * Enter a destination code with three digits.

Code	Destination	Code	Destination	Code	Destination
000	Japan	159	South Africa	253	Sweden
009	Australia	169	Thailand		France
080	Hong Kong	181	U.S.A.		Austria
084	Indonesia	242	South America		Switzerland
088	Israel	243	Saudi Arabia		Belgium
108	Malaysia	253	CTR21 (European nations)		Denmark
126	New Zealand		Italy		Finland
136	Peru		Germany		Portugal
137	Philippines		Spain		Ireland
152	Middle East		U.K.		Norway
156	Singapore		Netherlands	254	Taiwan

4. Enter the OEM code (000) and then press the enter key.
5. After data initialization, the entered destination, OEM codes and ROM version are displayed. A ROM version displays three kinds, application, IPL, and boot.

```
Ini. Keep data
COMPLETED XXX 000
APLI:****************
BOOT:****************
IPL:****************
```

Figure 1-3-54

6. After completing the installation, run a communications test to confirm that the fax system is working correctly.

TONER
www.tonerplus.com.ua

1-4-1 Maintenance mode

The machine is equipped with a maintenance function which can be used to maintain and service the machine.

(1) Executing a maintenance item

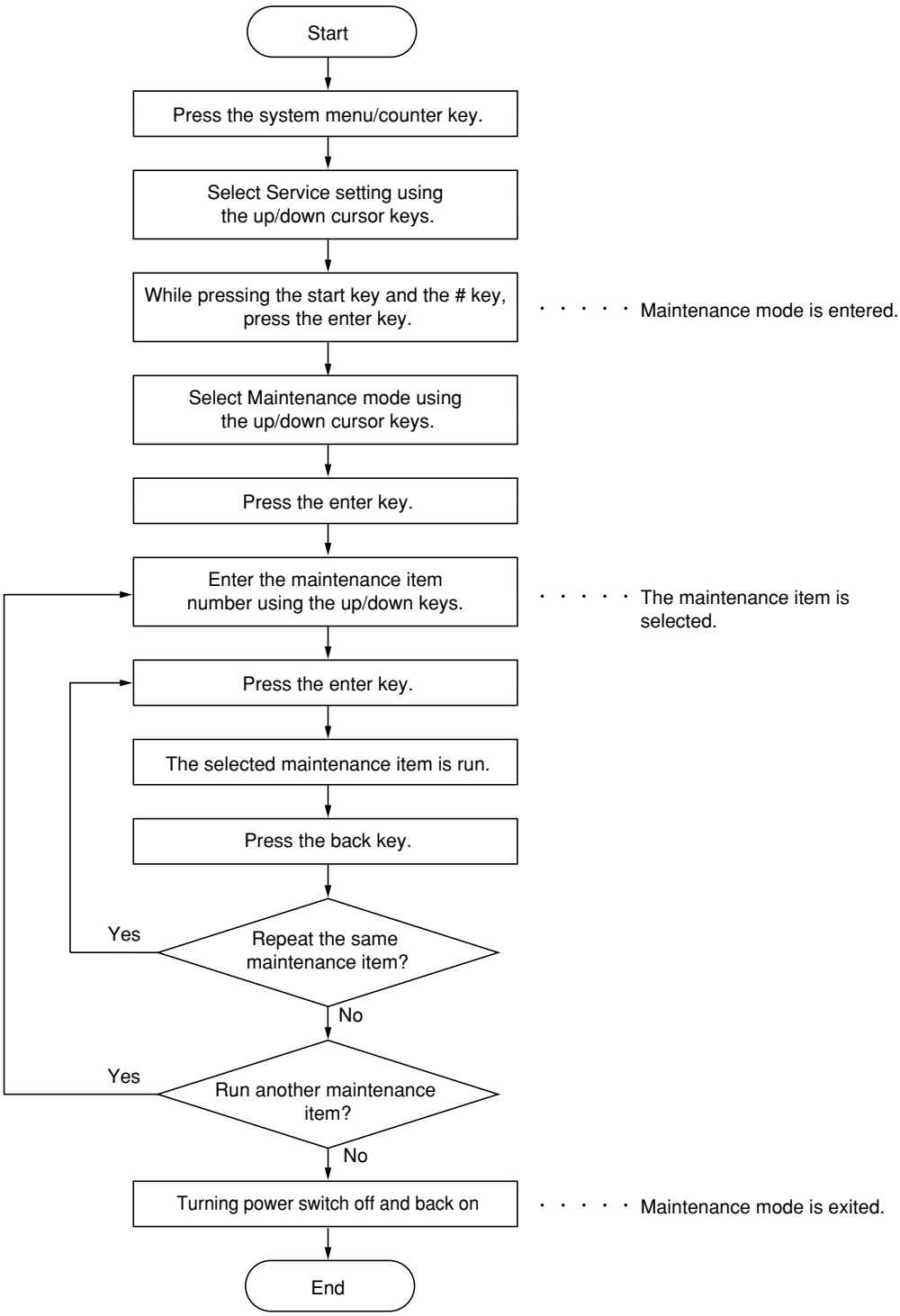

* The test print mode cannot be stopped until the preset number of sheets is printed. To stop the operation, remove the cassette to cause a paper empty state. To terminate the test print mode in the middle of operation, you must turn off the power switch and then on again to exit the maintenance mode.

TONER
www.tonerplus.com.ua

(2) Maintenance modes

Category	Item No.	Maintenance	Initial setting*
General	U000	Outputting an own-status report	—
Initialization	U020	Initializing all data	—
Drive, paper feed and paper conveying system	U034	Setting paper timing • Adjusting the leading edge registration • Adjusting the center line	 — —
	U051	Adjusting the amount of slack in the paper	0
Optical	U060	Adjusting the scanner input properties	12
	U063	Adjusting the shading position	0
	U065	Adjusting the scanner magnification • Main scanning direction • auxiliary scanning direction	 0 0
	U066	Adjusting the leading edge registration for scanning an original on the contact glass	6
	U067	Adjusting the center line for scanning an original on the contact glass	7
	U070	Adjusting the DP magnification	–2
	U071	Adjusting the DP scanning timing • Adjusting leading edge registration • Adjusting trailing edge registration	 11 0
	U072	Adjusting the DP center line	-0.7
	U074	Adjusting the DP input light luminosity	1
	U087	Turning the DP scanning position adjust mode on/off	35
	U089	Outputting a MIP-PG pattern	—
High voltage	U101	Setting the other high voltages	26/55/48/ 43/24/60
Developing	U130	Initial setting for the developer	OFF
	U144	Setting toner loading operation	1
	U157	Checking/clearing the developing drive time	—
Fusing and cleaning	U161	Setting the fusing control temperature • Primary stabilization fusing temperature • Secondary stabilization fusing temperature • Copying operation temperature 1 • Copying operation temperature 2 • Number of sheets for fusing control	 135 160 190 195 5
	U163	Resetting the fusing problem data	—
Operation panel and support equipment	U203	Operating DP separately	—
	U207	Checking the operation panel keys	—
Mode setting	U260	Changing the copy count timing	—
Image processing	U403	Adjusting margins for scanning an original on the contact glass	—
	U404	Adjusting margins for scanning an original from the DP	—
	U411	Adjusting the scanner automatically	—
	U425	Setting the target	—
Others	U901	Checking/clearing print counts by paper feed locations	—
	U905	Checking/clearing counts by the DP	—
	U911	Checking/clearing print counts by paper size	—
	U927	Clearing accounting counter	—
	U928	Checking/clearing the machine life count	—

TONER
www.tonerplus.com.ua

* Initial setting for executing maintenance item U020

(3) Contents of maintenance mode items

Maintenance item No.	Description
U000	**Outputting an own-status report**

Description

Outputs lists of the current settings of the maintenance items, and paper jam and service call occurrences and event log report.

Purpose

To check the current setting of the maintenance items, or paper jam or service call occurrences.
Before initializing the backup RAM, output a list of the current settings of the maintenance items to reenter the settings after initialization or replacement.

Method

1. Press the enter key. A selection item appears.
2. Select the item to be output using the up/down cursor keys.

Display	Output list
Maintenance	Outputs the maintenance list
Event Log	Outputs the event log report

3. Press the enter key. The test print mode is entered and a list is output.

Completion

Press the back key while a selection item is displayed. The indication for selecting a maintenance item No. appears.

Detail of event log

Event Log
MFP

Firmware Version 2GM_2000.001.073 2004.12.26

① **Paper Jam Log**

#	Count.	Event Descriptions
1	0	05.43.01.08.01.01

Paper Jam/Printer Main Unit/Paper Late

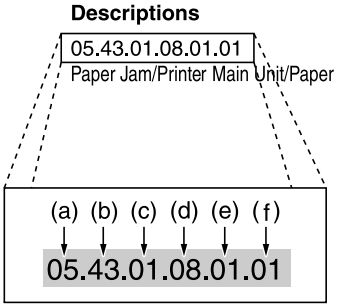

② **Service Call Log**

#	Count.	Service Code
8	9999999	01.80
7	9999998	F4.50
6	9999997	01.80
5	9999996	F4.15
4	9999995	01.80
3	9999994	01.80
2	9999993	01.80
1	9999992	01.80

③ **Maintenance Log**

#	Count.	Item
1	9999999	01.00

④ **Counter Log**

J03:000	J10:000	J20:000	J40:000	J71:000	J7F:000	CF450:001
J04:000	J11:000	J21:000	J50:000	J7A:000	C0180:006	M00:001
J05:001	J12:000	J22:000	J70:000	J7B:000	CF415:001	

www.tonerplus.com.ua

Maintenance item No.	Description

Item	Description
① Paper Jam Log	#: Log number 1 to 16 jams are recorded. (If the number of jams exceeds 16, the oldest log is deleted.) Count.: Number of pages Total page counter at the time of jam Event: Log code Six types of two-digit hexadecimal numbers are displayed. Cause of jam/jam position/paper feed location/paper size/media type /ejection location Descriptions: Indicates the description of error
	(a) Cause of jam 03: No paper feed [–] 04: Cover open JAM [–] 05: Secondary paper feed timeout [H] 10: No paper feed from the MP tray [B] 11: No paper feed from the cassette [C] 12: No paper feed from the optional cassette [D] 20: Multiple sheets in the MP tray [B] 21: Multiple sheets in the cassette [C] 22: Multiple sheets in the optional cassette [D] 40: Misfeed in the fusing section [H] 50: Misfeed in the exit section [G] 70: No original feed [P] 71: An original jam in the original conveying section [P] 7A: DP original cover or front top cover open JAM [P] 7B: DP open JAM [P] 7F: Original remaining JAM [P]
	(b) Jam position 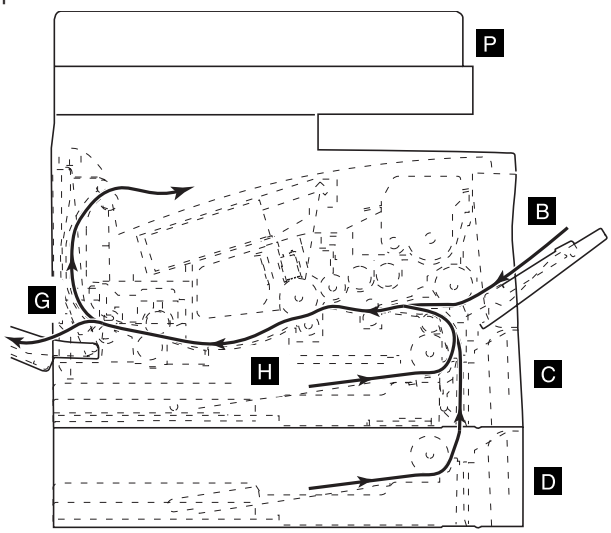 42 [B]: MP tray 43 [C]: Cassette 44 [D]: Optional cassette 47 [G]: Face-up/down eject tray 48 [H]: MFP 50 [P]: DP
	(c) Paper feed location 00: MP tray 01: Cassette 02: Optional cassette

www.tonerplus.com.ua

Maintenance item No.	Description

Item	Description
	(c) Paper size 01: Envelope Monarch / 09: B5 / 1F: Postcard 02: Envelope #10 / 0D: A5 / 20: Reply-paid postcard 03: Envelope DL / 0E: A6 / 21: Officio II 04: Envelope C5 / 0F: B6 / 28: 16K 05: Executive / 10: Envelope #9 / 32: Statement 06: Letter / 11: Envelope #6 / 33: Folio 07: Legal / 12: ISO B5 / 34: Western 2 08: A4 / 13: Custom / 35: Western 4
	(d) Media type 01: Plain / 09: Letterhead / 17: Custom 3 02: Transparency / 0A: Color / 18: Custom 4 03: Preprinted / 0B: Prepunched / 19: Custom 5 04: Label / 0C: Envelope / 1A: Custom 6 05: Bond / 0D: Cardstock / 1B: Custom 7 06: Recycled / 10: Thick / 1C: Custom 8 07: Vellum / 15: Custom 1 08: Rough / 16: Custom 2
	(e) Ejection location 01: Face-down output tray
② Service Call Log	#: Log number 1 to 8 service calls are recorded. (If the number of service calls exceeds 8, the oldest log is deleted.) Count.: Number of pages Total page counter at the time of service call Service code: Log code
③ Maintenance Log	#: Log number 1 to 8 maintenance logs are recorded. (If the number of replacement times exceeds 8, the oldest log is deleted.) Count.: Number of pages Total page counter at the time of replacement Item: Log code Two units of 1-byte values indicate a log. First byte 01: Replacement of toner container Second byte 00 : black (fixed)
④ Counter Log	Jam count Counter display by cause of jam Example J05: 001 Jam05 occurred one time. Call system log Counter display by service call Example C0180: 006 C0180 occurred six times. Replacement log Replacement log display by item Example M00: 001 The toner container was replaced one time.

TONER
www.tonerplus.com.ua

Maintenance item No.	Description
U020	**Initializing all data** **Description** Initializes all the backup RAM on the engine PWB to return to the original settings. **Purpose** Used when replacing backup RAM on the engine PWB. After initialization, run U157 “Changing the developing drive time” and U411 “Adjusting the scanner automatically.” **Method** 1. Press the enter key. A selection item appears. 2. Select Execute using the up/down cursor keys. 3. Press the enter key. All data in the backup RAM is initialized. When initialization is complete, turn the power switch off and on. **Completion** To exit this maintenance item without executing initialization, press the back key. The indication for selecting a maintenance item No. appears.
U034	**Adjusting the print start timing** **Adjustment** See pages 1-6-41 and 42.
U051	**Adjusting the amount of slack in the paper** **Adjustment** See page 1-6-43.
U060	**Adjusting the scanner input properties** **Description** Adjusts the image scanning density. **Purpose** Used when the entire image appears too dark or light. **Method** Press the enter key. **Setting** 1. Change the setting using the left/right cursor keys. Display: γ Adj. (MONO); Description: Image scanning density; Setting range: 0 to 23; Initial setting: 12 Increasing the setting makes the density higher, and decreasing it makes the density lower. 2. Press the enter key. The value is set. **Test print mode** While this maintenance item is being performed, copying from an original can be made in test print mode. 1. Press the system menu/counter key. The machine enters the test print mode. 2. Set the original and press the start key. * The test printing, however, cannot be stopped until the preset number of sheets is printed. 3. To return to the indication for setting, press the system menu/counter key. **Completion** Press the back key. The indication for selecting a maintenance item No. appears.

TONER
www.tonerplus.com.ua

Maintenance item No.	Description
U063	**Adjusting the shading position** **Description** Changes the shading position. **Purpose** Used when white lines continue to appear longitudinally on the image after the shading plate is cleaned. This is due to flaws or stains inside the shading plate. To prevent this problem, the shading position should be changed so that shading is possible without being affected by the flaws or stains. **Method** Press the enter key. **Setting** 1. Change the setting using the left/right cursor keys. Display: Adjust Data; Description: Shading position; Setting range: –5 to +5; Initial setting: 0 Increasing the setting moves the shading position toward the machine left, and decreasing it moves the position toward the machine right. 2. Press the enter key. The value is set. **Test print mode** While this maintenance item is being performed, copying from an original can be made in test print mode. 1. Press the system menu/counter key. The machine enters the test print mode. 2. Set the original and press the start key. * The test printing, however, cannot be stopped until the preset number of sheets is printed. 3. To return to the indication for setting, press the system menu/counter key. **Completion** Press the back key. The indication for selecting a maintenance item No. appears.
U065	**Adjusting the scanner magnification** **Adjustment** See pages 1-6-44 and 45.
U066	**Adjusting the leading edge registration for scanning an original on the contact glass** **Adjustment** See page 1-6-46.
U067	**Adjusting the center line for scanning an original on the contact glass** **Adjustment** See page 1-6-47.
U070	**Adjusting the DP magnification** **Adjustment** See page 1-6-49.
U071	**Adjusting the DP scanning timing** **Adjustment** See pages 1-6-50 and 51.
U072	**Adjusting the DP center line** **Adjustment** See page 1-6-52.

TONER
www.tonerplus.com.ua

Maintenance item No.	Description
U074	**Adjusting the DP input light luminosity** **Description** Adjusts the luminosity of the exposure lamp for scanning originals from the DP. **Purpose** Used if the exposure amount differs significantly between when scanning an original on the contact glass and when scanning an original from the DP. **Method** Press the enter key. **Setting** 1. Change the setting using the left/right cursor keys. Increasing the setting makes the luminosity higher, and decreasing it makes the luminosity lower. 2. Press the enter key. The value is set. **Test print mode** While this maintenance item is being performed, copying from an original can be made in test print mode. 1. Press the system menu/counter key. The machine enters the test print mode. 2. Set the original and press the start key. * The test printing, however, cannot be stopped until the preset number of sheets is printed. 3. To return to the indication for setting, press the system menu/counter key. **Completion** Press the back key. The indication for selecting a maintenance item No. appears.
U087	**Turning the DP scanning position adjust mode on/off** **Description** Turns on or off the DP scanning position adjust mode, in which the DP original scanning position is adjusted automatically by determining the presence or absence of dust on the slit glass. Also changes the reference data for identifying dust. **Reference** In the DP original scanning position adjust mode, the presence or absence of dust is determined by comparing the scan data of the original trailing edge and that taken after the original is conveyed past the DP original scanning position. If dust is identified, the DP original scanning position is adjusted for the following originals. **Purpose** Used to prevent appearance of black lines due to dust adhering in the original scanning position on the slit glass when the DP is used. **Method** 1. Press the enter key. A selection item appears. 2. Select the item to be set using the up/down cursor keys. **Setting the mode on/off** 1. Change the setting using the left/right cursor keys. 2. Press the enter key. The setting is set. **Setting the reference data for identifying dust** Available only when the mode is turned on. 1. Change the setting using the left/right cursor keys. 2. Press the enter key. The value is set. **Completion** Press the back key. The indication for selecting a maintenance item No. appears.

Display	Description	Setting range	Initial setting
Adjust Data	DP input light luminosity	0 to 8	1

Display	Description
On/Off	Setting the mode on/off
Data	Setting the reference data for identifying dust

Setting range	Initial setting
OFF/ON	On

Setting range	Initial setting
10 to 95	35

TONER

Maintenance item No.	Description
U089	**Outputting a MIP-PG pattern**

Description

Selects and outputs a MIP-PG pattern created in the machine.

Purpose

When performing respective image printing adjustments, used to check the machine status apart from that of the scanner with a non-scanned output MIP-PG pattern.

Method

1. Press the enter key. A selection item appears.
2. Select the item to be output using the up/down cursor keys.

Display	Description
Gray Scale	Outputs the gray PG
Mono	Outputs the monochrome PG
256	Outputs the 256-level PG
1dot	Outputs the 1dot PG

3. Press the enter key to enter the selected mode.

Method: Gray PG output or 256-level PG output

1. Press the up/down cursor keys to select the desired item of gradation processing.

Display	Description
Err Diffusion2	2-value error diffusion method
Err Diffusion4	4-value error diffusion method
Dither	Dither matrix method

2. Press the enter key.
3. Press the up/down cursor keys to select whether output of γ is on or off.

Display	Description
γ Off	Output of γ off
γ On	Output of γ on

4. Press the enter key.
5. Press the system menu/counter key. The machine enters the PG pattern output mode.
6. Press the start key. A MIP-PG pattern is output.
7. To return to the indication for setting, press the system menu/counter key.

Method: Monochrome PG output

1. Change the setting using the left/right cursor keys.

Description	Setting range	Initial setting
Monochrome PG output level	0 to 255	70

2. Press the enter key. The value is set.
3. Press the up/down cursor keys to select the desired item of gradation processing.

Display	Description
Err Diffusion2	2-value error diffusion method
Err Diffusion4	4-value error diffusion method
Dither	Dither matrix method

4. Press the enter key.
5. Press the up/down cursor keys to select whether output of γ is on or off.

Display	Description
γ Off	Output of γ off
γ On	Output of γ on

6. Press the enter key.
7. Press the system menu/counter key. The machine enters the PG pattern output mode.
8. Press the start key. A MIP-PG pattern is output.
9. To return to the indication for setting, press the system menu/counter key.

TONER
www.tonerplus.com.ua

<table>
<tr><th>Maintenance item No.</th><th>Description</th></tr>
<tr><td>U089</td><td>
Method: 1dot PG output
1. Change the setting using the left/right cursor keys.
<table>
<tr><th>Description</th><th>Setting range</th><th>Initial setting</th></tr>
<tr><td>Number of 1dot pattern</td><td>1 to 16</td><td>1</td></tr>
</table>
2. Press the enter key. The value is set.
3. Press the system menu/counter key. The machine enters the PG pattern output mode.
4. Press the start key. A MIP-PG pattern is output.
5. To return to the indication for setting, press the system menu/counter key.
Completion
Press the back key while a selection item is displayed. The indication for selecting a maintenance item No. appears.
</td></tr>
<tr><td>U101</td><td>
Setting the other high voltages
Description
Changes the developing bias clock and the transfer charging output timing.
Purpose
To check the developing bias clock and the transfer charging output timing. Do not change the preset value.
Method
Press the enter key. A selection item appears.
Setting
1. Select the item to be using the up/down cursor keys.
2. Change the setting using the left/right cursor keys.
<table>
<tr><th>Display</th><th>Description</th><th>Setting range</th><th>Initial setting</th></tr>
<tr><td>DB_100Hz (CPY)</td><td>Developing bias clock frequency</td><td>2 to 255</td><td>26</td></tr>
<tr><td>DB_Duty% (CPY)</td><td>Developing bias clock frequency</td><td>1 to 99</td><td>55</td></tr>
<tr><td>TC Off [10ms]</td><td>Transfer charging output OFF timing</td><td>0 to 255</td><td>48</td></tr>
<tr><td>TC On [10ms]</td><td>Transfer charging output ON timing</td><td>0 to 255</td><td>43</td></tr>
<tr><td>DB_100Hz (PRT)</td><td>Developing bias clock frequency</td><td>2 to 255</td><td>24</td></tr>
<tr><td>DB_Duty% (PRT)</td><td>Developing bias clock duty</td><td>1 to 99</td><td>60</td></tr>
</table>
3. Press the enter key. The value is set.
Completion
Press the back key. The indication for selecting a maintenance item No. appears.
</td></tr>
<tr><td>U130</td><td>
Initial setting for the developer
Description
Executes toner install operation.
Purpose
To operate when replacing the process unit.
Method
1. Press the enter key. A selection item appears.
2. Select On using the up/down cursor keys.
3. Press the enter key.
4. Turning the power switch off and back on.
ADDING TONER is displayed and installation of toner starts.
5. After approximately 15 minutes, the installation is completed and the machine becomes ready.
Completion
Press the back key. The indication for selecting a maintenance item No. appears.
</td></tr>
</table>

TONER
www.tonerplus.com.ua

Maintenance item No.	Description
U144	**Setting toner loading operation** **Description** Sets toner loading operation. **Purpose** To run when drum filming (background blur in paper edge section) occurs. **Method** Press the enter key. **Setting** 1. Change the setting using the left/right cursor keys. Initial setting: 1 2. Press the enter key. The setting is set. **Completion** Press the back key. The indication for selecting a maintenance item No. appears.
U157	**Checking/clearing the developing drive time** **Description** Displays the developing drive time for checking or changing a figure. **Purpose** To enter the developing drive time again after carrying out initialization with U020 and to clear the developing drive time when replacing process unit. **Method** 1. Press the enter key. The developing drive time is displayed in minutes. 2. Change the setting using the left/right cursor keys or numeric keys. Setting range: 0 to 99999 To clear the developing drive time, set the value to 0. 3. Press the enter key. The value is set. **Completion** Press the back key. The indication for selecting a maintenance item No. appears.

Setting value	Description
0	Toner not loaded
1	Toner loaded

TONER
www.tonerplus.com.ua

Maintenance item No.	Description
U161	**Setting the fusing control temperature** **Description** Changes the fusing control temperature. **Purpose** Normally no change is necessary. However, can be used to prevent curling or creasing of paper, or solve a fusing problem on thick paper. **Method** Press the enter key. A selection item appears. **Setting** 1. Select the item to be set using the up/down cursor keys. 2. Change the setting using the left/right cursor keys. **Display** / **Description** / **Setting range** / **Initial setting** First Temp. / Primary stabilization fusing temperature / 100 to 165 (°C) / 135 Second Temp. / Secondary stabilization fusing temperature / 100 to 165 (°C) / 160 Copy Temp. 1 / Printing operation temperature 1 / 160 to 220 (°C) / 190 Copy Temp. 2 / Printing operation temperature 2 / 160 to 220 (°C) / 195 Temp. 1 Cont. # / Number of sheets for fusing control / 1 to 99 / 5 Printing operation temperature 1: Temperature in printing operation at the start of printing Printing operation temperature 2: Temperature in printing operation after the specified number of sheets for fusing control have passed Number of sheets for fusing control: The number of sheets to be counted for switching from printing operation temperature 1 to printing operation temperature 2 The temperatures are to be set such that Secondary stabilization ≧ Primary stabilization. 3. Press the enter key. The value is set. **Completion** Press the back key. The indication for selecting a maintenance item No. appears.
U163	**Resetting the fusing problem data** **Description** Resets the detection of a service call code indicating a problem in the fusing section. When a service call concerning the fusing section occurs, turn the power switch off and open the front cover. Then, turn the power switch on and press the system menu/counter key to enter the maintenance mode. **Purpose** To prevent accidents due to an abnormally high fusing temperature. **Method** 1. Press the enter key. A selection item appears. 2. Select Execute using the up/down cursor keys. 3. Press the enter key. The fusing problem data is initialized. (Four service calls, namely C6000, C6020, C6050, and C6400 are reset.) **Completion** Press the back key. The indication for selecting a maintenance item No. appears.

TONER
www.tonerplus.com.ua

Maintenance item No.	Description
U203	**Operating DP separately** **Description** Simulates the original conveying operation separately in the DP. **Purpose** To check the DP. **Method** 1. Press the enter key. A selection item appears. 2. Select the item to using the up/down cursor keys. **Display** / **Operation** DP — With paper DP (Non P) — Without paper (continuous operation) 3. Press the start key. The operation starts. * When operation with paper is selected, if no original is set in the DP, this mode cannot be run. When operation without paper is selected, if originals are set in the DP, this mode cannot be run. 4. To stop continuous operation, press the stop/clear key. **Completion** Press the back key when the operation stops. The indication for selecting a maintenance item No. appears.
U207	**Checking the operation panel keys** **Description** Checks operation of the operation panel keys. **Purpose** To check operation of all the keys and LEDs on the operation panel. **Method** 1. Press the enter key. 2. 01 appears and the leftmost LED on the operation panel lights. 3. As the keys on the operation panel are pressed in order from the left to right, the figure shown increases in increments of 1. If there is an LED corresponding to the key pressed, the LED will light. 4. When all keys are pressed, all LEDs will light for 10 s. **Completion** Press the stop/clear key. The indication for selecting a maintenance item No. appears.
U260	**Changing the copy count timing** **Description** Changes the copy count timing for the total counter and other counters. **Purpose** To be set according to user (copy service provider) request. If a paper jam occurs frequently in the eject section when the number of copies is counted at the time of paper ejection, copies are provided without copy counts. The copy service provider cannot charge for such copying. To prevent this, the copy timing should be made earlier. If a paper jam occurs frequently in the paper conveying or fusing sections when the number of copies is counted before the paper reaches those sections, copying is charged without a copy being made. To prevent this, the copy timing should be made later. **Method** Press the enter key. A selection item appears. **Setting** 1. Select the copy count timing using the up/down cursor keys. **Display** / **Description** Feed — When secondary paper feed starts Eject — When the paper is ejected 2. Press the enter key. The setting is set. **Completion** Press the back key. The indication for selecting a maintenance item No. appears.

TONER
www.tonerplus.com.ua

Maintenance item No.	Description
U403	**Adjusting margins for scanning an original on the contact glass** **Adjustment** See page 1-6-48.
U404	**Adjusting margins for scanning an original from the DP** **Adjustment** See page 1-6-53.
U411	**Adjusting the scanner automatically** **Description** Uses the original for adjustment (P/N: 2A668011) to carry out the automatic adjustment of scanner (scanner center line adjustment, scanner leading edge registration adjustment, magnification of the scanner in the auxiliary scanning direction adjustment, monochrome/color input γ adjustment, and color correction). **Purpose** To run after replacing the engine PWB, ISU unit, exposure lamp or platen glass (shading plate). Before carrying out automatic adjustment, input the target values using U425 “Setting the target.” **Method** 1. Run U425 “Setting the target” to input the target values. 2. Set the original to be used for adjustment on the platen. 3. Set five or six sheets of blank paper on the original for adjustment that has been set. 4. Press the enter key. A selection item appears. 5. Select Execute using the up/down cursor keys. 6. Press the enter key. Adjustment is carried out. * Do not turn the power switch OFF or open/close the cover (turning the safety switch OFF/ON) before automatic adjustment is complete. 7. If the adjustment is successful, OK is displayed. If not, NG is displayed. * If NG is displayed, set the original for adjustment properly again, gently close the original cover, and then carry out the adjustment again. **Completion** Press the back key. The indication for selecting a maintenance item No. appears.

TONER
www.tonerplus.com.ua

Maintenance item No.	Description
U425	

Setting the target

Description

When running U411 “Adjusting the scanner automatically,” input the color data value of the specified patch written in the LAB value table on the back side of the original for adjustment (P/N: 2A668011). Note that incorrect value input results in improper automatic adjustment.

Purpose

To run before running U411 “Adjusting the scanner automatically.”

Method

Press the enter key. A selection item appears.

Setting

1. Select the item to be set using the up/down cursor keys.
2. Change the setting using the left/right cursor keys or keypad.
   * Input the values written in the LAB value table on the back side of the original.

Display	Description	Setting range
N8.75(L*) N8.75(a*) N8.75(b*)	Black N8.75 (L*) target Black N8.75 (a*) target Black N8.75 (b*) target	0.0 to +100.0 –200.0 to +200.0 –200.0 to +200.0
N4.75(L*) N4.75(a*) N4.75(b*)	Black N4.75 (L*) target Black N4.75 (a*) target Black N4.75 (b*) target	0.0 to +100.0 –200.0 to +200.0 –200.0 to +200.0
N1.25(L*) N1.25(a*) N1.25(b*)	Black N1.25 (L*) target Black N1.25 (a*) target Black N1.25 (b*) target	0.0 to +100.0 –200.0 to +200.0 –200.0 to +200.0
C(L*) C(a*) C(b*)	Cyan (L*) target Cyan (a*) target Cyan (b*) target	0.0 to +100.0 –200.0 to +200.0 –200.0 to +200.0
M(L*) M(a*) M(b*)	Magenta (L*) target Magenta (a*) target Magenta (b*) target	0.0 to +100.0 –200.0 to +200.0 –200.0 to +200.0
Y(L*) Y(a*) Y(b*)	Yellow (L*) target Yellow (a*) target Yellow (b*) target	0.0 to +100.0 –200.0 to +200.0 –200.0 to +200.0
R(L*) R(a*) R(b*)	Red (L*) target Red (a*) target Red (b*) target	0.0 to +100.0 –200.0 to +200.0 –200.0 to +200.0
G(L*) G(a*) G(b*)	Green (L*) target Green (a*) target Green (b*) target	0.0 to +100.0 –200.0 to +200.0 –200.0 to +200.0
B(L*) B(a*) B(b*)	Blue (L*) target Blue (a*) target Blue (b*) target	0.0 to +100.0 –200.0 to +200.0 –200.0 to +200.0

3. Press the enter key. The value is set.

Completion

Press the back key. The indication for selecting a maintenance item No. appears.

TONER
www.tonerplus.com.ua

<table>
<tr><th>Maintenance item No.</th><th>Description</th></tr>
<tr><td>U901</td><td>

Checking/clearing print counts by paper feed locations

Description
Displays or clears print counts by paper feed locations.

Purpose
To check the time to replace consumable parts. Also to clear the counts after replacing the consumable parts.

Method
1. Press the enter key. The print count will be displayed for each paper feed location.

<table>
<tr><th>Display</th><th>Paper source</th></tr>
<tr><td>Bypass
Cassette 1
Cassette 2
All Clear</td><td>MP tray
Cassette
Optional cassette
Clearing all counts</td></tr>
</table>

2. Select the paper feed location to clear the count using the up/down cursor keys. To clear all counts, select All Clear.
3. Press the enter key. The count is cleared.

Completion
Press the back key. The indication for selecting a maintenance item No. appears.

</td></tr>
<tr><td>U905</td><td>

Checking/clearing counts by the DP

Description
Displays the counts of the DP.

Purpose
To check the use of the optional DP.

Method
Press the enter key. The count will be displayed.
To clear the count, press the enter key.

Completion
Press the back key. The indication for selecting a maintenance item No. appears.

</td></tr>
<tr><td>U911</td><td>

Checking/clearing print counts by paper size

Description
Displays or clears the paper feed count value by paper size.

Purpose
To check the time to replace consumable parts. Also to clear the counts after replacing the consumable parts.

Method
1. Press the enter key. The paper feed counts by paper size will be displayed.
2. Select the paper size to clear the count using the up/down cursor keys. To clear all counts, select All Clear.
3. Press the enter key. The count is cleared.

Completion
Press the back key. The indication for selecting a maintenance item No. appears.

</td></tr>
</table>

TONER
www.tonerplus.com.ua

Maintenance item No.	Description
U927	**Clearing accounting counter** **Description** Clears the total count, scanner count and machine life count. The counts, however, can be cleared only one time. If either of the total count, canner count or machine life count exceeds 1,000, this mode cannot be run. **Purpose** To start the counters with value 0 when installing the machine. **Method** 1. Press the enter key. A selection item appears. 2. Select Execute using the up/down cursor keys. * If the counter has been cleared, Execute is not displayed. 3. Press the enter key. The accounting counter is cleared. **Completion** Press the back key. The indication for selecting a maintenance item No. appears.
U928	**Checking the machine life count** **Description** Displays the machine life count for checking a figure. **Purpose** To check machine status. **Method** Press the enter key. The machine life count will be displayed **Completion** Press the back key. The indication for selecting a maintenance item No. appears.

TONER
www.tonerplus.com.ua

1-4-2 System settings

In addition to a maintenance function, the machine is equipped with a system settings which can be operated by users (mainly by the machine administrator). In this machine system settings, default settings can be changed.

(1) Executing a system setting item

• Executing a system setting item

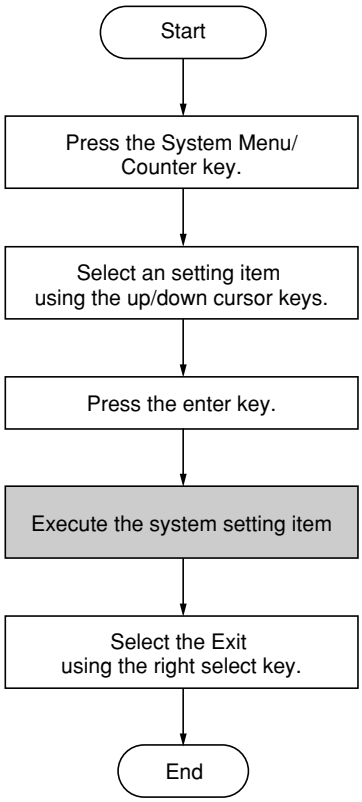

TONER
www.tonerplus.com.ua

(2) System settings

Adjusting the contrast of the message display

1. Select Adjust and press the enter key.
2. Select LCD Contrast and press the enter key.
3. Select the desired contrast and press the enter key.

Selecting the message language

1. Select Common Setting and press the enter key.
2. Select Language and press the enter key.
3. Select the language to be used in the message display and press the enter key.

Setting the default operation mode

1. Select Common Setting and press the enter key.
2. Select Default Operat. and press the enter key.
3. Select the desired default operation mode and press the enter key.

Setting the unit of measurement

1. Select Common Setting and press the enter key.
2. Select Measurement and press the enter key.
3. Select either Inch or mm and press the enter key.

Adjusting the copy exposure for the original quality modes

1. Select Adjust and press the enter key.
2. Select Copy Expo. Adj. and press the enter key.
3. Select the original quality mode and press the enter key.
4. Select the desired copy exposure and press the enter key.

Turning black-line correction ON/OFF

1. Select Adjust and press the enter key.
2. Select Scan Noise Reduc and press the enter key.
3. Select either On or Off and press the enter key.

Setting the photo processing method

1. Select Copy Setting and press the enter key.
2. Select Photo Processing" and press the enter key.
3. Select the desired processing method and press the enter key.

Resetting the toner status

1. Select Common Setting and press the enter key.
2. Select Toner Setting and press the enter key.
3. Select Toner Gauge Rset and press the enter key.
4. Select either Yes or No.

Changing the function defaults

1. Select Function Default and press the enter key.
2. Select the default setting and press the enter key.
3. Select the new default setting and press the enter key.

TONER+
www.tonerplus.com.ua

Registering destination E-mail addresses under one-touch keys

1. Select Common Setting and press the enter key.
2. Select One Touch Keys and press the enter key.
3. Select the number of the one-touch and press the enter key.
4. Select E-mail and press the enter key.
5. Enter or revise the e-mail address and then press the enter key.

Restarting the machine

1. Select System Setting and press the enter key.
2. Select Restart and press the enter key.
3. Select either Yes or No.

Turning individual alarms ON/OFF and/or adjusting the alarm volume

1. Select Common Setting and press the enter key.
2. Select Sound Setting and press the enter key.
3. Select Buzzer and press the enter key.
4. Select Volume and press the enter key.
5. Select the desired volume for the alarms and press the enter key.
6. Select the desired alarm and press the enter key.
7. Select either On or Off and press the enter key.

Setting the date and time

1. Select Date/Timer Set. and press the enter key.
2. Select Year/Time and press the enter key.
3. Register the current year, month and day.
4. Press the enter key.
5. Register the current hour, minute and second.
6. Press the enter key.

Setting the date format

1. Select Date/Timer Set. and press the enter key.
2. Select Date Format and press the enter key.
3. Select the desired date format.

Setting the time zone

1. Select Date/Timer Set. and press the enter key.
2. Select Time Zone and press the enter key.
3. Select the time zone and press the enter key.

Turning the summer time setting ON/OFF

1. Select Date/Timer Set. and press the enter key.
2. Select Summer Time and press the enter key.
3. Select either On or Off and press the enter key.

Setting of the panel reset time

1. Select Date/Timer Set. and press the enter key.
2. Select Auto Panel Reset and press the enter key.
3. Select either On or Off and press the enter key.

Setting of the reset time

1. Select Date/Timer Set. and press the enter key.
2. Select Reset Timer and press the enter key.
3. Register the current reset timer and press the enter key.

Setting the low power time

1. Select Date/Timer Set. and press the enter key.
2. Select Low Power Timer and press the enter key.
3. Select the desired time for the low power mode to engage and press the enter key.

Setting of the sleep time

1. Select Date/Timer Set. and press the enter key.
2. Select Auto sleep and press the enter key.
3. Select either On or Off and press the enter key.

Setting of the sleep timer

1. Select Date/Timer Set. and press the enter key.
2. Select Sleep Timer and press the enter key.
3. Select the desired time for the sleep mode to engage and press the enter key.

Setting the auto continue recovery time

1. Select Date/Timer Set. and press the enter key.
2. Select Auto Err. Clear and press the enter key.
3. Select either On or Off and press the enter key.

Setting of the error clear time

1. Select Date/Timer Set. and press the enter key.
2. Select Err. Clear Timer and press the enter key.
3. Select the desired recovery time and press the enter key.

Registering custom original paper sizes

1. Select Common Setting and press the enter key.
2. Select Orig./Paper Set. and press the enter key.
3. Select Custom Orig. Size and press the enter key.
4. Select Custom and press the enter key.
5. Select the width of the original to be registered, and press the enter key.
6. Select the height of the original to be registered, and press the enter key.

Registering custom paper sizes

1. Select Common Setting and press the enter key.
2. Select Orig./Paper Set. and press the enter key.
3. Select Custom PaperSize, and press the enter key.
4. Select Custom and press the enter key.
5. Select the height of copy paper to be registered and press the enter key.
6. Select the width of copy paper to be registered and press the enter key.

TONER
www.tonerplus.com.ua

Setting defalt original size

1. Select Common Setting and press the enter key.
2. Select Orig./Paper Set. and press the enter key.
3. Select Def. Org. Size and press the enter key.
4. Select the desired size and press the enter key.

Registering the paper size and type for cassettes

1. Select Common Setting and press the enter key.
2. Select Orig./Paper Set. and press the enter key.
3. Select Cassette1(2) Set. and press the enter key.
4. Select Cassette1(2) Size and press the enter key.
5. Select the size of paper and press the enter key.
6. Select Cassette1(2) Type and press the enter key.
7. Select the type of paper and press the enter key.
8. Select Back and press the enter key.

Registering the paper size and type for the MP tray

1. Select Common Setting and press the enter key.
2. Select Orig./Paper Set. and press the enter key.
3. Select MP Tray Set. and press the enter key.
4. Select MP Tray Size and press the enter key.
5. Select the size of paper and press the enter key.
6. Select MP Tray Type and press the enter key.
7. Select the type of paper and press the enter key.
8. Select Back and press the enter key.

Creating a custom paper type

1. Select Common Setting and press the enter key.
2. Select Orig./Paper Set. and press the enter key.
3. Select Media Type Adj. and press the enter key.
4. Select the type of paper or select one of the custom settings and press the enter key.
5. Select the desired paper weight and press the enter key.
6. Select the desired printing exposure and press the enter key.
7. Enter the desired name for this custom paper type and press the enter key.

Selecting the paper feed location

1. Select Common Setting and press the enter key.
2. Select Orig./Paper Set. and press the enter key.
3. Select Def. Paper Input and press the enter key.
4. Select the paper feed location and press the enter key.

Designating the APS (Auto Paper Selection) paper type

1. Select Copy Setting and press the enter key.
2. Select APS Media Type and press the enter key.
3. Select the type of paper that will be used in the APS mode and press the enter key.

1-4-3 Service settings

The machine is equipped with a service settings which can be operated by service person.

(1) Executing a service setting item

¥ Executing a system setting item

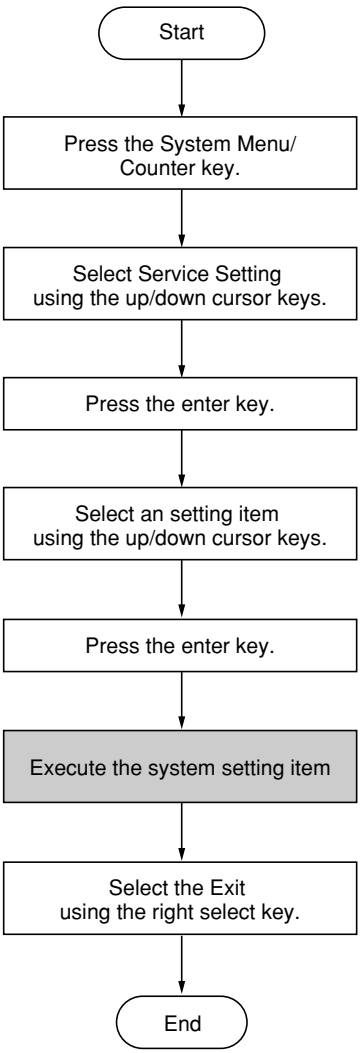

TONER
www.tonerplus.com.ua

(2) Contents of service setting items

Service items	Description
Ser. Status Page	**Printing a status page for service purpose** **Description** Prints a status page for service purpose. The status page includes various printing settings and service cumulatives. **Procedure** 1.Select [Ser. Status Page] using up/down cursor keys and press the enter key. 2.Select [Yes] using the left select key. Service status pages (2 pages) are output. **Detail of service status page**

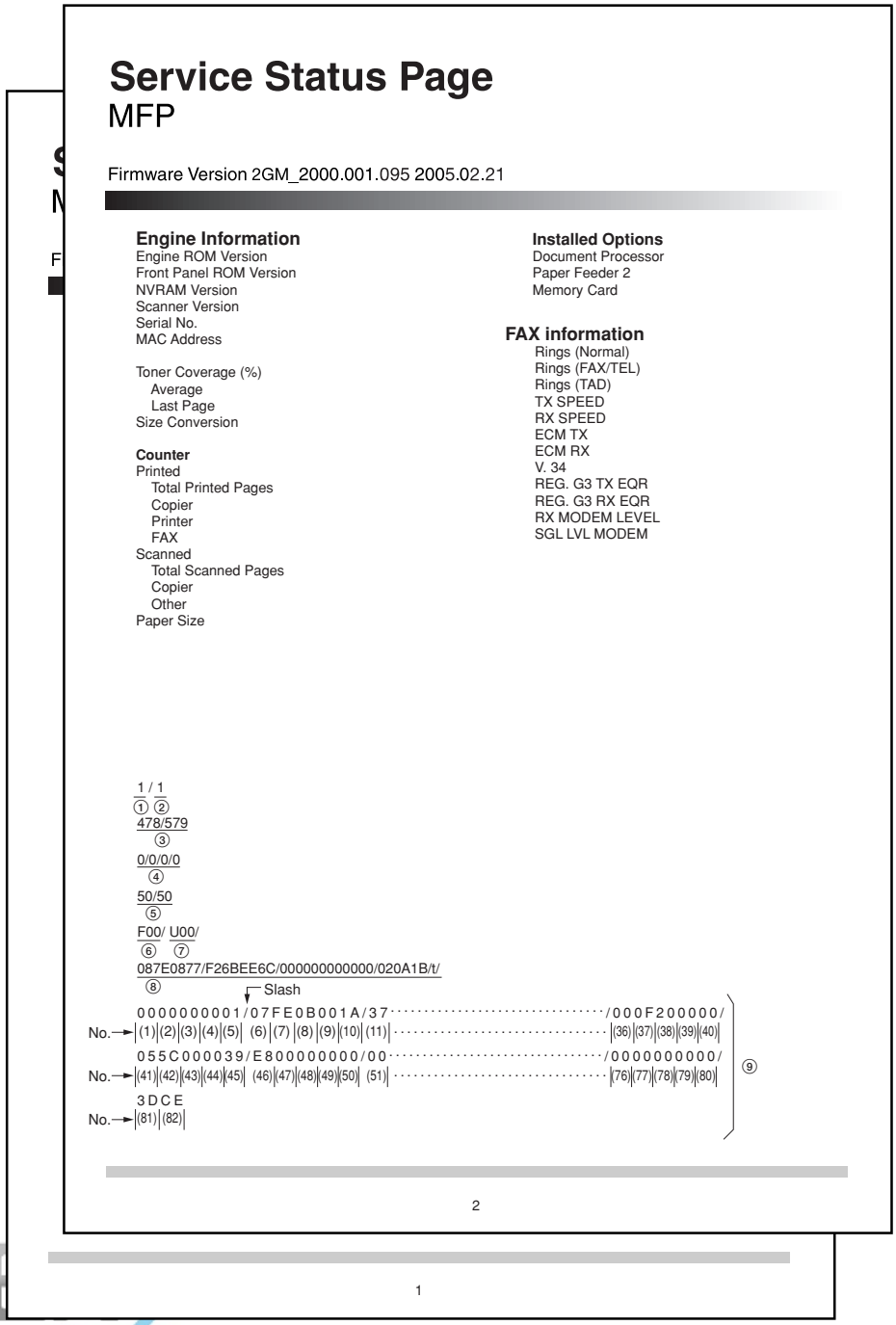

*[FAX Information] is only printed when the optional fax system is installed in the machine.

TONE
www.tonerplus.com.ua

Service items	Description

	Items	Description
①	Destination information	1: For Europe/Australia/New Zealand 2: For America/Canada/South America 3: For Europe/Middle East/Asia 17/18/19/21: OEM
②	Area information	1: Europe 2: North America 3: Asia (except Chine) 4: Japan 5: Australia 6: China
③	Printable area	Legth/Width
④	Offset for each paper source	MP tray top offset/MP tray left offset/Optional drawer top offset/Optional drawer left offset
⑤	Margin	Top margin/Left margin
⑥	Operation panel key lock status	0: Off 1: Partial lock (cancelling job is available) 2: Full lock (displayed only)
⑦	USB information	0: Not installed 1: Full speed 2: Hi-speed
⑧	Engine information (Hexadecimal)	Monochirome AGC offset odd result, Monochirome AGC offset odd setting value, Monochirome AGC offset even result, Monochirome AGC offset even setting value/ Monochirome AGC gain odd result, Monochirome AGC gain odd setting value, Monochirome AGC gain even result, Monochirome AGC gain even setting value/ Color AGC offset red result, Color AGC offset red setting value, Color AGC offset green result, Color AGC offset green setting value, Color AGC offset blue result, Color AGC offset blue setting value/ Color AGC gain red result, Color AGC gain red setting value, Color AGC gain green result, Color AGC gain green setting value, Color AGC gain blue, Color AGC gain blue setting value/ Lamp stabilization parameter A, B, C/ Toner installation mode/
⑨	Maintenance information (Hexadecimal)	

No.	Data Description
1	Amount of slack in the paper: Drawer
2	MP tray
3	Optional drawer
4	Shading position
5	Scanner magnification
6	Print start timing
7	DP magnification
8	DP scanning timing: Leading edge
9	Trailing edge
10	Other high voltages: Developing bias clock frequency
11	Developing bias clock frequency
12	Transfer charging output OFF timing
13	Transfer charging output ON timing
14	Developing bias clock frequency
15	Developing bias clock duty

www.tonerplus.com.ua

Service items	Description

	Items	Description
⑨	Maintenance information (Hexadecimal)	

No.	Data Description
16	Initial setting for the developer
17	Setting toner loading operation
18	Developing drive time (most significant byte)
19	(secod byte)
20	(third byte)
21	(least significant byte)
22	Fusing control temperature: Primary stabilization fusing temperature
23	Secondary stabilization fusing temperature
24	Printing operation temperature 1
25	Printing operation temperature 2
26	Number of sheets for fusing control
27	Paper location counter: MP tray counter (most significant byte)
28	(secod byte)
29	(third byte)
30	(least significant byte)
31	Drawer counter (most significant byte)
32	(secod byte)
33	(third byte)
34	(least significant byte)
35	Optional drawer counter (most significant byte)
36	(secod byte)
37	(third byte)
38	(least significant byte)
39	DP counter (most significant byte)
40	(secod byte)
41	(third byte)
42	(least significant byte)
43	Paper size counter: A4 size (most significant byte)
44	(secod byte)
45	(third byte)
46	(least significant byte)
47	B5 size (most significant byte)
48	(secod byte)
49	(third byte)
50	(least significant byte)
51	A5 size (most significant byte)
52	(secod byte)
53	(third byte)
54	(least significant byte)
55	A6 size (most significant byte)
56	(secod byte)
57	(third byte)
58	(least significant byte)
59	Folio size (most significant byte)
60	(secod byte)
61	(third byte)
62	(least significant byte)
63	8½" × 14" size (most significant byte)
64	(secod byte)
65	(third byte)
66	(least significant byte)

Service items	Description

	Items	Description
⑨	Maintenance information (Hexadecimal)	

No.	Data Description
67	Paper size counter: 8½" × 11" size (most significant byte)
68	(secod byte)
69	(third byte)
70	(least significant byte)
71	5½" × 8½" size (most significant byte)
72	(secod byte)
73	(third byte)
74	(least significant byte)
75	Other size (most significant byte)
76	(secod byte)
77	(third byte)
78	(least significant byte)
79	Machine life counter (most significant byte)
80	(secod byte)
81	(third byte)
82	(least significant byte)

Service items	Description
NW Status Page	**Printing a status page for network** **Description** Prints a status page that lists information on the network settings. **Procedure** 1. Select [NW Status Page] using up/down cursor keys and press the enter key. 2. Select [Yes] using the left select key. Network status pages (3 pages) are output. **Sample of network status page**

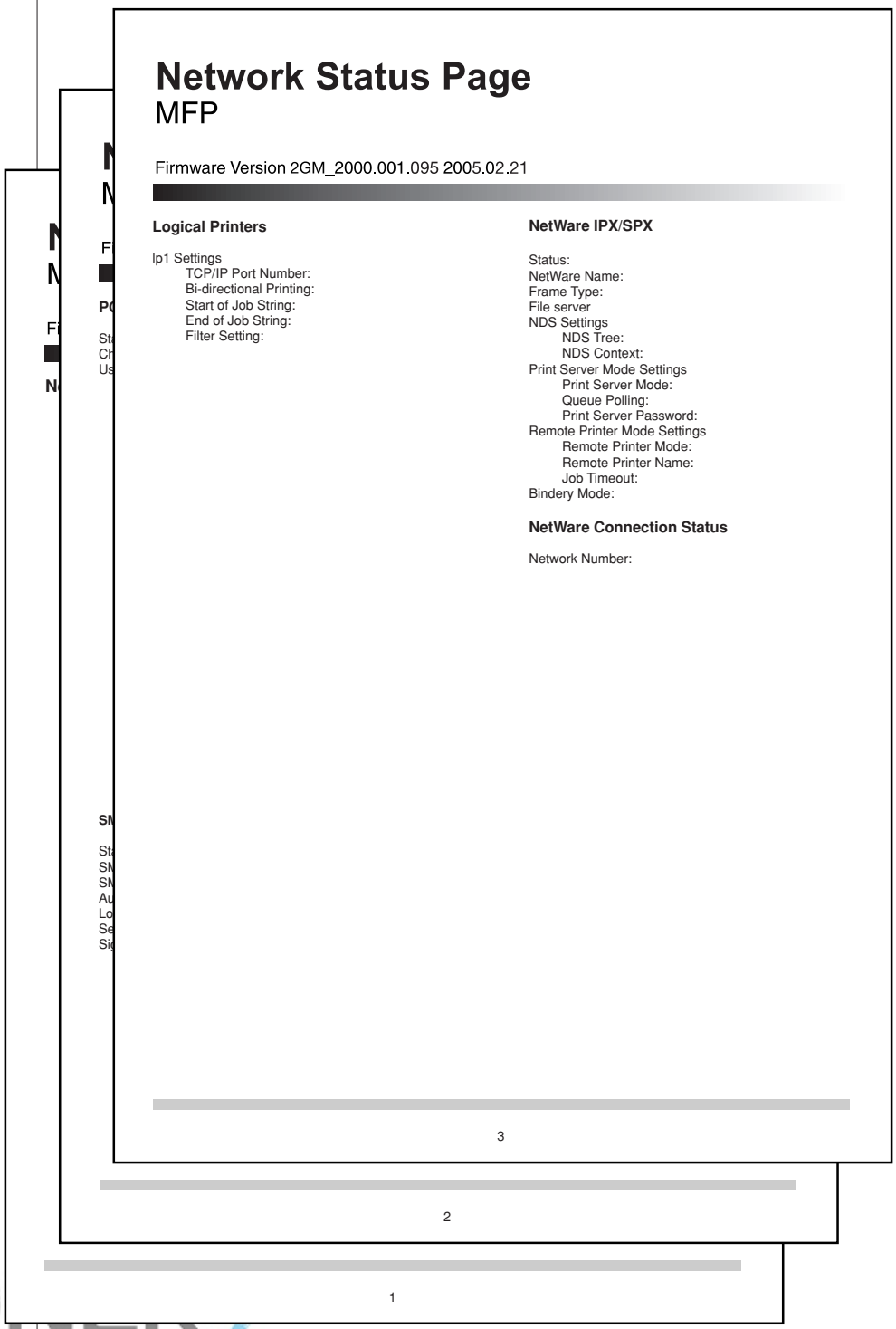

Network Status Page
MFP

Firmware Version 2GM_2000.001.095 2005.02.21

Logical Printers

lp1 Settings
TCP/IP Port Number:
Bi-directional Printing:
Start of Job String:
End of Job String:
Filter Setting:

NetWare IPX/SPX

Status:
NetWare Name:
Frame Type:
File server
NDS Settings
NDS Tree:
NDS Context:
Print Server Mode Settings
Print Server Mode:
Queue Polling:
Print Server Password:
Remote Printer Mode Settings
Remote Printer Mode:
Remote Printer Name:
Job Timeout:
Bindery Mode:

NetWare Connection Status

Network Number:

3

2

1

TONER
www.tonerplus.com.ua

Service items	Description
New Developer	**Toner installation mode** **Description** Executes toner install operation when replacing the toner. **Procedure** 1. Select [New Developer] using up/down cursor keys and press the enter key. 2. Select [Yes] using the left select key. 3. [Completed] is displayed and set the toner install mode. 4. Turning the power switch off and back on. [Adding Toner] is displayed at the time of the next power switch on, and toner installation operation is executed.. After approximately 15 minutes, the installation is completed and the machine becomes ready.
Drum Refresh	**Drum surface refreshing** **Description** To clean the drum surface when image failure occurs due to contamination. This mode is useful when dew condensation on the drum occurs. **Procedure** 1. Select [Drum Refresh] using cursor up/down keys and press the enter key. 2. Select [Yes] using the left select key. Drum surface refreshing will start and finish after approximately 2 minutes.
Transport mode	**Transport mode** **Description** Follow the instructions below to reinstall the transport pin before moving the machine. **Procedure** 1. Select [Transport mode] using cursor up/down keys and press the enter key. 2. Select [Yes] using the left select key. The mirror frame of the scanner returns to the position for transport. 3. Check that [Turn power off.] is displayed and turn the power switch off. 4. Open the front top cover and front cover. 5. Remove the transport pin from the front cover. 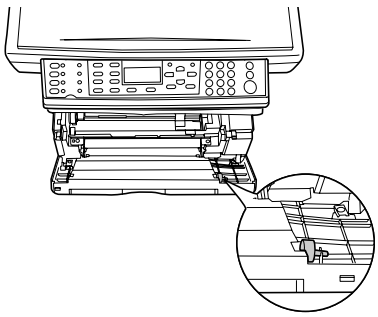 **Figure 1-4-1** 6. Refit the pin as shown in the figure. 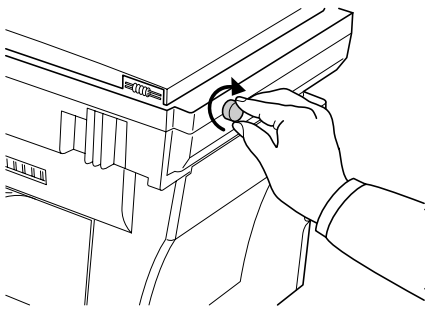 **Figure 1-4-2** 7. Close the front top cover and front cover.

TONER
www.tonerplus.com.ua

Service items	Description
FAX Country Code	**Setting the FAX destination code** Note: This setting is only available when the optional fax system is installed in the machine. **Description** To set the fax destination code. Basically, the setting need not be changed. **Procedure** 1. Select [FAX Country Code] using up/down cursor keys and press the enter key. 2. Enter the country code using the numeric keys.
Remote Diag. Set	**Setting the FAX remote diagnosis system** Note: This setting is only available when the optional fax system is installed in the machine. **Description** Set to take advantage of our remote diagnosis system. **Procedure** 1. Select [Remote Diag. Set] using up/down cursor keys and press the enter key. 2. Select [Off] or [On] using the up/down cursor keys and press the enter key.
Remote Diag. ID	**Entering the FAX remote ID number** Note: This setting is only available when the optional fax system is installed in the machine. **Description** Register the designated remote test ID for remote diagnosis. In order to perform the remote diagnosis, it needs to be set as On by setting the FAX remote diagnosis system. **Procedure** 1. Select [Remote Diag. ID] using cursor up/down keys and press the enter key. 2. Enter a 4-digit ID using the numeric keys.

TONER
www.tonerplus.com.ua

1-5-1 Paper misfeed detection

(1) Paper misfeed indication

When a paper misfeed occurs, the machine immediately stops copying or printing and displays the jam location on the operation panel.
To remove paper jammed in the machine, open the face-up output tray, front top cover, front cover or pull the cassette out.
To remove original jammed in the optional DP, open the DP original cover.
Paper misfeed detection can be reset by opening and closing the respective covers to turn interlock switch off and on.

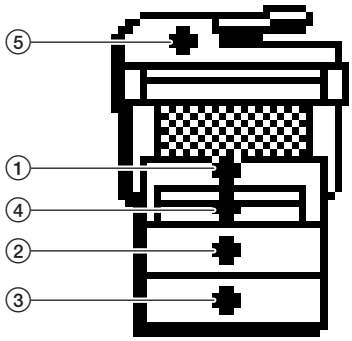

Figure 1-5-1

① Misfeed inside the machine
② Misfeed in the cassette
③ Misfeed in the optional cassette
④ Misfeed in the MP tray
⑤ Misfeed in the optional DP

TONER
www.tonerplus.com.ua

(2) Paper misfeed detection conditions

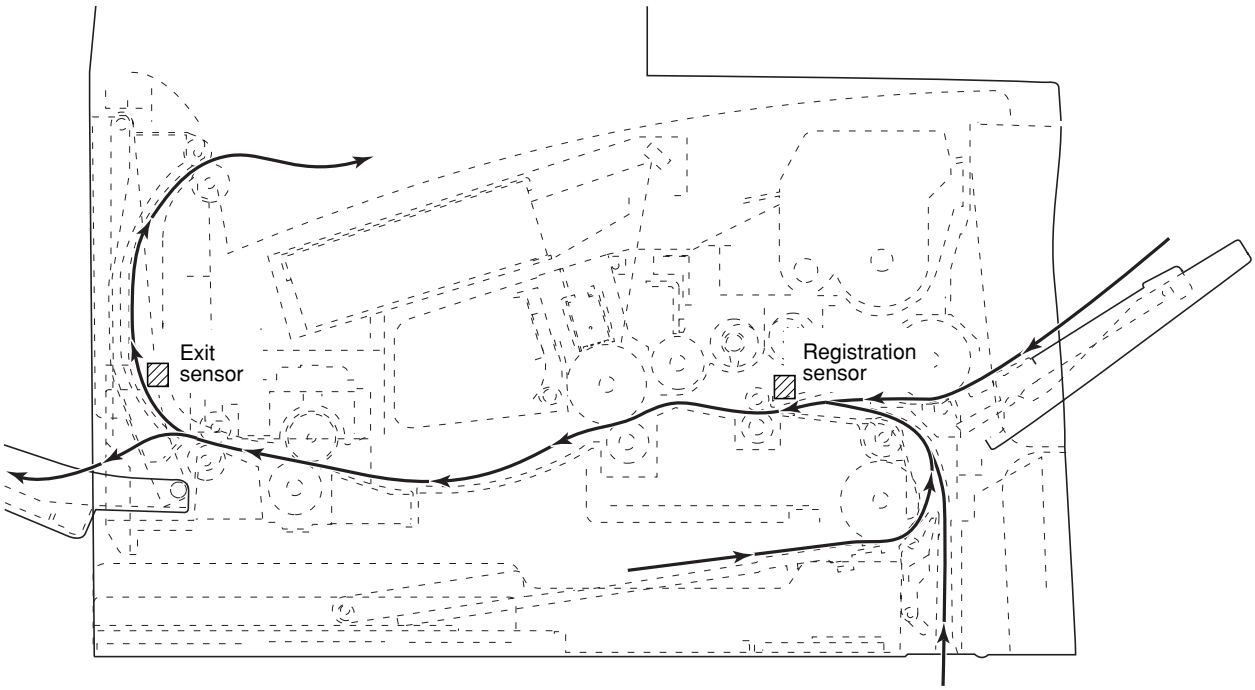

Figure 1-5-2

TONER
www.tonerplus.com.ua

Section	Jam code	Description	Conditions
System	03	No paper feed	When the power switch is turned on or front top cover is closed, the machine detects activation of the registration sensor or the exit sensor.
	04	Cover open JAM	A cover open state is detected during copying or printing.
	05	Secondary paper feed timeout	When the machine waits for secondary paper feed, 15 s or more have elapsed.
Paper feed section	10	No paper feed from the MP tray	The registration sensor does not turn on within 1350 ms of the MP feed clutch turning on; the clutch is then successively turned off for 1 s and turned back on once, but the sensor again fails to turn on within 1350 ms.
	11	No paper feed from the cassette	The registration sensor does not turn on within 1120 ms of the feed clutch turning on; the clutch is then successively turned off for 1 s and turned back on once, but the sensor again fails to turn on within 1120 ms.
	12	No paper feed from the optional cassette	The registration sensor does not turn on within 1160 ms of the feed clutch turning on; the clutch is then successively turned off for 1 s and turned back on once, but the sensor again fails to turn on within 1160 ms.
	20	Multiple sheets in the MP tray	The registration sensor does not turn off within 5055 ms of the registration clutch turning on (when paper is fed from the MP tray).
	21	Multiple sheets in the cassette	The registration sensor does not turn off within 5055 ms of the registration clutch turning on (when paper is fed from the cassette).
	22	Multiple sheets in the optional cassette	The registration sensor does not turn off within 5055 ms of the registration clutch turning on (when paper is fed from the optional cassette).
Fusing section	40	Misfeed in the fusing section	The exit sensor does not turn on within 2765 ms of the registration clutch turning on.
Exit section	50	Misfeed in the exit section	The exit sensor does not turn off within 2765 ms of the registration sensor turning off.
DP (option)	70	No original feed	When the power switch is turned on, the machine detects activation of the DP timing switch.
			The machine cannot detect activation of the DP timing switch even after 1350 ms elapses since the start of primary paper feed and cannot detect it at the same timing even after 5 times of retry.
	71	An original jam in the original conveying section	The machine cannot detect deactivation of the DP timing switch even after 4227 ms elapses since the start of secondary paper feed.
			The machine detects deactivation of the DP timing switch even after 909 ms elapses since the start of secondary paper feed.
	7A	DP original cover or front top cover open JAM	The machine detects opening of the DP original cover or the front top cover while scanning originals.
	7B	DP open JAM	The machine detects opening of the DP while scanning originals.
	7F	Original remaining JAM	When the machine starts scanning of originals, the DP timing switch is on.

TONER
www.tonerplus.com.ua

(3) Paper misfeeds

• Main body

Problem	Causes/check procedures	Corrective measures
(1) A paper jam in the conveying, fusing or exit section is indicated as soon as the power switch is turned on. Jam code 03	A piece of paper torn from paper is caught around registration sensor or exit sensor.	Check visually and remove it, if any.
	Defective registration sensor.	Check if YC8-7 on the engine PWB remains low when the registration sensor is turned on and off. If it does, replace the registration sensor.
	Defective exit sensor.	Check if YC7-7 on the engine PWB remains low when the exit sensor is turned on and off. If it does, replace the exit sensor.
(2) A paper jam in the paper feed section is indicated during copying or printing (no paper feed from the MP tray). Jam code 10	Paper on the MP tray is extremely curled.	Change the paper.
	Check if the MP feed roller is deformed.	Check visually and replace any deformed roller.
	Defective registration sensor.	Check if YC8-7 on the engine PWB remains low when the registration sensor is turned on and off. If it does, replace the registration sensor.
	Check if the MP feed clutch malfunctions.	Check and remedy if necessary.
	Electrical problem with the MP feed clutch.	Check.
(3) A paper jam in the paper feed section is indicated during copying or printing (no paper feed from the cassette). Jam code 11	Paper in the cassette is extremely curled.	Change the paper.
	Check if the feed roller is deformed.	Check visually and replace any deformed roller.
	Defective registration sensor.	Check if YC8-7 on the engine PWB remains low when the registration sensor is turned on and off. If it does, replace the registration sensor.
	Check if the feed clutch malfunctions.	Check and remedy if necessary.
	Electrical problem with the feed clutch.	Check.
(4) A paper jam in the paper feed section is indicated during copying or printing (no paper feed from the optional cassette). Jam code 12	Paper in the optional cassette is extremely curled.	Change the paper.
	Check if the feed roller of the optional cassette is deformed.	Check visually and replace any deformed roller.
	Defective registration sensor.	Check if YC8-7 on the engine PWB remains low when the registration sensor is turned on and off. If it does, replace the registration sensor.
	Check if the feed clutch malfunctions.	Check and remedy if necessary.
	Electrical problem with the feed clutch.	Check.

TONER
www.tonerplus.com.ua

Problem	Causes/check procedures	Corrective measures
(5) A paper jam in the paper feed section is indicated during copying or printing (multiple sheets in the MP tray). Jam code 20	Check if the MP feed roller is deformed.	Check visually and replace any deformed roller.
	Defective registration sensor.	Check if YC8-7 on the engine PWB remains low when the registration sensor is turned on and off. If it does, replace the registration sensor.
	Check if the registration clutch malfunctions.	Check and remedy if necessary.
	Electrical problem with the registration clutch.	Check.
(6) A paper jam in the paper feed section is indicated during copying or printing (multiple sheets in the cassette). Jam code 21	Check if the feed roller is deformed.	Check visually and replace any deformed roller.
	Defective registration sensor.	Check if YC8-7 on the engine PWB remains low when the registration sensor is turned on and off. If it does, replace the registration sensor.
	Check if the registration clutch malfunctions.	Check and remedy if necessary.
	Electrical problem with the registration clutch.	Check.
(7) A paper jam in the paper feed section is indicated during copying or printing (multiple sheets in the optional cassette). Jam code 22	Check if the feed roller of the optional cassette is deformed.	Check visually and replace any deformed roller.
	Defective registration sensor.	Check if YC8-7 on the engine PWB remains low when the registration sensor is turned on and off. If it does, replace the registration sensor.
	Check if the registration clutch malfunctions.	Check and remedy if necessary.
	Electrical problem with the registration clutch.	Check.
(8) A paper jam in the fusing section is indicated during copying or printing (jam in the fusing section). Jam code 40	Defective exit sensor.	Check if YC7-7 on the engine PWB remains low when the exit sensor is turned on and off. If it does, replace the exit sensor.
	Check if the registration clutch malfunctions.	Check and remedy if necessary.
	Electrical problem with the registration clutch.	Check.
	Check if the upper and lower registration rollers contact each other.	Check visually and remedy if necessary.
	Check if the lower exit roller and exit pulleys contact each other.	Check visually and remedy if necessary.
	Check if the press roller is extremely dirty or deformed.	Clean or replace if necessary.
	Check if the separators are dirty or deformed.	Clean or replace if necessary.

TONER
www.tonerplus.com.ua

Problem	Causes/check procedures	Corrective measures
(9) A paper jam in the exit section is indicated during copying or printing (jam in the exit section). Jam code 50	Defective registration sensor.	Check if YC8-7 on the engine PWB remains low when the registration sensor is turned on and off. If it does, replace the registration sensor.
	Defective exit sensor.	Check if YC7-7 on the engine PWB remains low when the exit sensor is turned on and off. If it does, replace the exit sensor.
	Check if the lower exit roller and exit pulleys contact each other.	Check visually and remedy if necessary.
	Check if the upper exit roller and exit pulleys contact each other.	Check visually and remedy if necessary.

TONER
www.tonerplus.com.ua

• **DP**

Problem	Causes/check procedures	Corrective measures
(1) An original jams when the power switch is turned on.	A piece of paper torn from an original is caught around the DP timing switch.	Remove any found.
	Defective DP timing switch.	Check if YC10-6 on the engine PWB remains low when the DP timing switch is turned on and off. If it does, replace the DP timing switch.
(2) An original jams in the DP is indicated during copying (no original feed). Jam code 70	Defective DP timing switch.	Check if YC10-6 on the engine PWB remains low when the DP timing switch is turned on and off. If it does, replace the DP timing switch.
	Check if the forwarding pulley or feed pulley is deformed.	Check visually and replace the deformed pulley.
(3) An original jams in the DP during copying (a jam in the original conveying section). Jam code 71	Defective DP timing switch.	Check if YC10-6 on the engine PWB remains low when the DP timing switch is turned on and off. If it does, replace the DP timing switch.
	Check if the conveying roller or exit roller is deformed.	Check visually and replace the deformed roller.
(4) Original jams frequently.	An original outside the specifications is used.	Use only originals conforming to the specifications.
	The forwarding pulley or feed pulley is dirty with paper powder.	Clean with isoproply alcohol.
	The conveying roller and conveying pulleys do not contact correctly.	Check and remedy.
	The exit roller and exit pulleys do not contact correctly.	Check and remedy.

TONER
www.tonerplus.com.ua

1-5-2 Self-diagnosis

(1) Self-diagnostic function

This unit is equipped with a self-diagnostic function. When a problem is detected, copying is disabled. C and a number between 0030 and 7990 altenates, indicating the nature of the problem.
After removing the problem, the self-diagnostic function can be reset by turning interlock switch off and back on.

(2) Self diagnostic codes

Code	Contents	Remarks	
		Causes	Check procedures/corrective measures
C0030	**Fax control PWB system problem** • Processing with the optional fax software was disabled due to a hardware or software problem.	Defective fax control PWB.	Replace the fax control PWB and check for correct operation.
C0070	**Fax control PWB incompatibility detection problem** • Optional fax software is not compatible with main software.	Fax software or main software is something of the other machine.	Check the version of the Fax software and the main software, upgrade the version to the compatible software.
C0150	**Backup memory read/write problem (engine PWB)** • Read and write data does not match.	Defective backup RAM or engine PWB.	Replace the engine PWB and check for correct operation.
C0160	**Backup memory data problem (engine PWB)** • Data in the specified area of the backup memory does not match the specified values.	Problem with the backup memory data.	Turn interlock switch off and back on and run maintenance item U020 to set the contents of the backup memory data again.
		Defective backup RAM.	If the C0160 is displayed after re-setting the backup memory contents, replace the backup RAM or engine PWB.
C0170	**Accounting count problem** • When the power is turned on, the total count and the scan count are abnormal both on the main PWB and the engine PWB.	Defective main PWB or engine PWB.	Replace the main PWB or engine PWB and check for correct operation.
C0180	**Machine number mismatch** • When the power is turned on, the machine number does not match between the main PWB and the engine PWB.	Defective main PWB or engine PWB.	Replace the main PWB or engine PWB and check for correct operation.
C0210	**Communication problem between the main PWB and engine PWB** • When the power is turned on, the machine does not detect the low level of SBSY and the high level of SDIR for three seconds.	Poor contact in the connector terminals.	Check the connection of connectors YC7 on the main PWB and YC3 on the engine PWB, and the continuity across the connector terminals. Repair or replace if necessary.
		Defective main PWB or engine PWB.	Replace the main PWB or engine PWB and check for correct operation.

TONER
www.tonerplus.com.ua

Code	Contents	Remarks	
		Causes	Check procedures/corrective measures
C0220	**Communication problem between the main PWB and operation PWB** • There is no reply after 20 retries at communication.	Poor contact in the connector terminals.	Check the connection of connectors YC13 on the main PWB and YC3 on the operation PWB, and the continuity across the connector terminals. Repair or replace if necessary.
		Defective main PWB or operation PWB.	Replace the main PWB or operation PWB and check for correct operation.
C0280	**Communication problem between the fax control PWB and main PWB** • Communication between the fax control PWB and the main PWB of the machine cannot be performed normally.	Poor contact in the connector terminals.	Check the connection of connector YC1 on the fax control PWB and the connector YC1 on the main PWB. Repair or replace if necessary.
		Defective main PWB or fax control PWB.	Replace the main PWB or fax control PWB and check for correct operation.
C0800	**Image processing problem** • JAM05 is detected twice.	Defective engine PWB.	Replace the engine PWB and check for correct operation.
C0830	**Flash ROM program area checksum error** • A checksum error occurred with the program of the optional fax control PWB.	Defective fax control PWB.	Replace the fax control PWB and check for correct operation.
C0870	**Fax control PWB to main PWB high-capacity data transfer problem** • High-capacity data transfer between the optional fax control PWB and the main PWB of the machine was not normally performed even if the data transfer was retried the specified times.	Poor contact in the connector terminals.	Check the connection of connector YC1 on the fax control PWB and YC1 on the main PWB, and the continuity across the connector terminals. Repair or replace if necessary.
		Defective fax control PWB or main PWB.	Replace the fax control PWB or main PWB and check for correct operation.
C0880	**Fax control PWB program archive problem** • When power is turned on, the compressed program in the Flash ROM on the optional fax control PWB was not successfully decompressed.	Defective fax control PWB.	Replace the fax control PWB and check for correct operation.
C0920	**Fax file system error** • The backup data is not retained for file system abnormality of flash memory of the optional fax control PWB.	Defective fax control PWB.	Replace the fax control PWB and check for correct operation.

TONER
www.tonerplus.com.ua

Code	Contents	Remarks	
		Causes	Check procedures/corrective measures
C2000	**Main motor problem** • LOCK ALM signal remains high for 1 s, 1 s after the main motor has turned on.	Poor contact in the main motor connector terminals.	Reinsert the connector. Also check for continuity within the connector cable. If none, remedy or replace the cable.
		Defective main motor rotation control circuit.	Replace the main motor.
		Defective drive transmission system.	Check if the rollers and gears rotate smoothly. If not, grease the bushings and gears. Check for broken gears and replace if any.
C3100	**Scanner carriage problem** • The home position is not correct when the power is turned on or copying the document placed on the contact glass.	Poor contact of the connector terminals.	Check the connection of connectors YC10, 11 on the engine PWB and the continuity across the connector terminals. Repair or replace if necessary.
		Defective scanner home position sensor.	Replace the scanner home position sensor.
		Defective engine PWB or scanner PWB.	Replace the engine PWB or scanner PWB and check for correct operation.
		Defective scanner motor.	Replace the scanner motor.
C3200	**Exposure lamp problem** • In indicator check before starting copying, the average value in scanning of the shading plate with the CCD is 128 or more.	Defective scanner PWB.	Replace the scanner PWB and check for correct operation.
		Defective exposure lamp or inverter PWB.	Replace the exposure lamp or inverter PWB.
		Incorrect shading position.	Adjust the position of the contact glass (shading plate). If the problem still occurs, replace the scanner home position sensor.
		Poor contact of the connector terminals.	Check the connection of connector YC7 on the scanner PWB, and the continuity across the connector terminals. Repair or replace if necessary.

TONER
www.tonerplus.com.ua

Code	Contents	Remarks	
		Causes	Check procedures/corrective measures
C4000	**Polygon motor synchronization problem** • The polygon motor does not reach the stable speed within 15 s of the START signal turning on.	Poor contact in the polygon motor connector terminals.	Reinsert the connector. Also check for continuity within the connector cable. If none, remedy or replace the cable.
		Defective polygon motor.	Replace the LSU.
		Defective engine PWB (KP-5238).	Replace the engine PWB and check for correct operation.
C4010	**Polygon motor steady-state problem** • The polygon motor rotation is not stable for 5 s after the polygon motor rotation has been stabilized.	Poor contact in the polygon motor connector terminals.	Reinsert the connector. Also check for continuity within the connector cable. If none, remedy or replace the cable.
		Defective polygon motor.	Replace the LSU.
		Defective engine PWB (KP-5238).	Replace the engine PWB and check for correct operation.
C6000	**Broken fusing heater wire** • In fusing warm-up, the time to reach 50 °C/122 °F exceeds 13.5 s, the time to reach 100 °C/212 °F exceeds 10 s, the time to reach the primary stabilization exceeds 10 s or the time to reach the secondary stabilization exceeds 24 s.	Poor contact in the thermistor connector terminals.	Check the connection of connector YC4 on the power supply PWB and the continuity across the connector terminals. Repair or replace if necessary.
		Thermistor installed incorrectly.	Check and reinstall if necessary.
		Thermal cutout triggered.	Check for continuity. If none, replace the thermal cutout.
		Heater lamp installed incorrectly.	Check and reinstall if necessary.
		Broken heater lamp wire.	Check for continuity. If none, replace the heater lamp.
C6020	**Abnormally high fusing unit thermistor temperature** • The fusing temperature exceeds 230 °C/446 °F for 40 ms.	Shorted thermistor.	Measure the resistance. If it is 0 Ω, replace the thermistor.
		Broken heater control circuit on the power supply PWB.	Replace the power supply PWB and check for correct operation.

TONER
www.tonerplus.com.ua

Code	Contents	Remarks	
		Causes	Check procedures/corrective measures
C6050	**Abnormally low fusing unit thermistor temperature** • The fusing temperature remains below 90°C/194°F for 1 s.	Poor contact in the thermistor connector terminals.	Check the connection of connector YC4 on the power supply PWB and the continuity across the connector terminals. Repair or replace if necessary.
		Broken thermistor wire.	Measure the resistance. If it is ∞ Ω, replace the thermistor.
		Thermistor installed incorrectly.	Check and reinstall if necessary.
		Thermal cutout triggered.	Check for continuity. If none, replace the thermal cutout.
		Heater lamp installed incorrectly.	Check and reinstall if necessary.
		Broken heater lamp wire.	Check for continuity. If none, replace the heater lamp.
C6400	**Zero-crossing signal problem** • The engine PWB does not detect the zero-crossing signal for the time specified below. At power-on: 3 s Others: 5 s	Poor contact in the connector terminals.	Check the connection of connectors YC7 on the engine PWB and YC2 on the power supply PWB, and the continuity across the connector terminals. Repair or replace if necessary.
		Defective power supply PWB.	Check if the zero-crossing signal is output from YC2-11 on the power supply PWB. If not, replace the power supply PWB.
		Defective engine PWB.	Replace the engine PWB if C6400 is detected while YC2-11 on the power supply PWB outputs the zero-crossing signal.
C7800	**Broken external temperature thermistor** • The input voltage is 0.5 V or less.	Poor contact in the operation PWB connector terminals.	Reinsert the connector. Also check for continuity within the connector cable. If none, remedy or replace the cable.
		Defective external temperature thermistor.	Replace the operation PWB and check for correct operation.
C7810	**Short-circuited external temperature thermistor** • The input voltage is 4.5 V or more.	Poor contact in the operation PWB connector terminals.	Reinsert the connector. Also check for continuity within the connector cable. If none, remedy or replace the cable.
		Defective external temperature thermistor.	Replace the operation PWB and check for correct operation.

TONER
www.tonerplus.com.ua

Code	Contents	Remarks	
		Causes	Check procedures/corrective measures
C7980	**Waste toner reservoir overflow problem (when the total number of copies is less than 100 thousand sheets)** • After E31 is displayed, 1,000 sheets are copied. Or waste toner exceeds 5 g.	Defective waste toner sensor or engine PWB.	Shake the process unit from side to side and turn the power switch off and then on. If the problem cannot be solved, replace the process unit. After replacing the process unit, turn the power switch off and then on. If the problem cannot be solved, replace the waste toner sensor or the engine PWB.
C7990	**Waste toner reservoir overflow problem (when the total number of copies is 100 thousand sheets or more)** • After E31 is displayed, 1,000 sheets are copied. Or waste toner exceeds 5 g.	Defective waste toner sensor or engine PWB.	Shake the process unit from side to side and turn the power switch off and then on. If the problem cannot be solved, replace the process unit. After replacing the process unit, turn the power switch off and then on. If the problem cannot be solved, replace the waste toner sensor or the engine PWB.
CF- - -	**Controller system error** • After Call for Service person is indicated, the error can be cleared by turning the power switch off and then on.	Defective main PWB.	If this error occurs again even after the power switch is turned off and then on again, replace the main PWB and check for correct operation.
CF010	**ROM checksum error** • After Call for Service person is indicated, the error can be cleared by turning the power switch off and then on.	Defective main PWB.	If this error occurs again even after the power switch is turned off and then on again, contact the Service Administrative Division.
CF012	**ROM checksum error** • After Call for Service person is indicated, the error can be cleared by turning the power switch off and then on.	Defective main PWB.	If this error occurs again even after the power switch is turned off and then on again, contact the Service Administrative Division.
CF1--	**Controller system error**	Defective main PWB.	If this error occurs again even after the power switch is turned off and then on again, contact the Service Administrative Division.
CF2--	**Controller system error**	Defective main PWB.	If this error occurs again even after the power switch is turned off and then on again, contact the Service Administrative Division.
CF3--	**Controller system error**	Defective main PWB.	If this error occurs again even after the power switch is turned off and then on again, contact the Service Administrative Division.
CF4--	**Controller system error**	Defective main PWB.	If this error occurs again even after the power switch is turned off and then on again, contact the Service Administrative Division.

TONER
www.tonerplus.com.ua

Code	Contents	Remarks	
		Causes	Check procedures/corrective measures
CF5--	**Controller system error**	Defective main PWB.	If this error occurs again even after the power switch is turned off and then on again, contact the Service Administrative Division.
CF6--	**Controller system error**	Defective main PWB.	If this error occurs again even after the power switch is turned off and then on again, contact the Service Administrative Division.
CF7--	**Controller system error**	Defective main PWB.	If this error occurs again even after the power switch is turned off and then on again, contact the Service Administrative Division.
CF8--	**Controller system error**	Defective main PWB.	If this error occurs again even after the power switch is turned off and then on again, contact the Service Administrative Division.

TONER
www.tonerplus.com.ua

1-5-3 Image formation problems

(1) No image appears (entirely white).

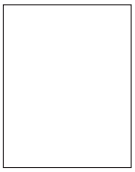

See page 1-5-16

(2) No image appears (entirely black).

See page 1-5-16

(3) Image is too light.

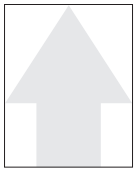

See page 1-5-17

(4) Background is visible.

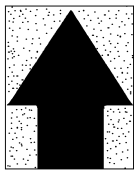

See page 1-5-17

(5) A white line appears longitudinally.

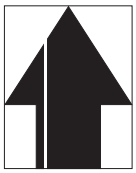

See page 1-5-17

(6) A black line appears longitudinally.

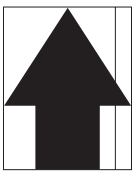

See page 1-5-18

(7) A black line appears laterally.

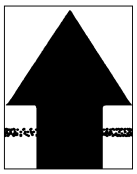

See page 1-5-18

(8) One side of the print image is darker than the other.

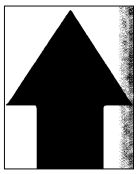

See page 1-5-18

(9) Black dots appear on the image.

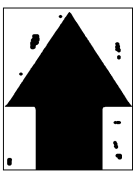

See page 1-5-19

(10) Image is blurred.

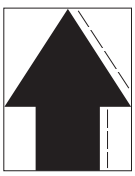

See page 1-5-19

(11) The leading edge of the image is consistently misaligned with the original.

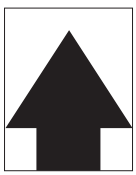

See page 1-5-19

(12) Paper creases.

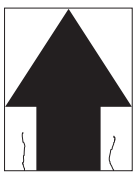

See page 1-5-20

(13) Offset occurs.

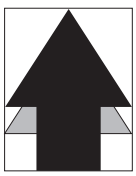

See page 1-5-20

(14) Image is partly missing.

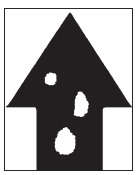

See page 1-5-20

(15) Fusing is poor.

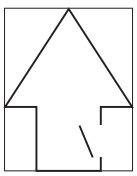

See page 1-5-21

(16) Image center does not align with the original center.

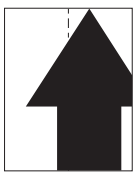

See page 1-5-21

TONER
www.tonerplus.com.ua

(1) No image appears (entirely white).

Causes
1. No transfer charging.

Causes	Check procedures/corrective measures
1. No transfer charging.	
A. The connector terminals of the high voltage PWB make poor contact.	Reinsert the connector. Also check for continuity within the connector cable. If none, remedy or replace the cable.
B. Defective engine PWB.	Replace the engine PWB and check for correct operation.
C. Defective high voltage PWB.	Replace the high voltage PWB and check for correct operation.

(2) No image appears (entirely black).

Causes
1. No main charging.
2. Exposure lamp fails to light.

Causes	Check procedures/corrective measures
1. No main charging.	
A. Broken main charger wire.	Replace the process unit.
B. Leaking main charger housing.	Replace the process unit.
C. The connector terminals of the high voltage PWB make poor contact.	Reinsert the connector. Also check for continuity within the connector cable. If none, remedy or replace the cable.
D. Defective engine PWB.	Replace the engine PWB and check for correct operation.
E. Defective high voltage PWB.	Replace the high voltage PWB and check for correct operation.
2. Exposure lamp fails to light.	
A. The connector terminals of the exposure lamp make poor contact.	Reinsert the connector. Also check for continuity within the connector cable. If none, remedy or replace the cable.
B. Defective CCD PWB.	Replace the CCD PWB and check for correct operation.
C. Defective scanner PWB.	Replace the scanner PWB and check for correct operation.
D. Defective engine PWB.	Replace the engine PWB and check for correct operation.

TONER+
www.tonerplus.com.ua

(3) Image is too light.

Causes
1. Insufficient toner.
2. Deteriorated developer.
3. Dirty or deteriorated drum.

Causes	Check procedures/corrective measures
1. Insufficient toner.	If the add toner indicator lights, replace the toner container.
2. Deteriorated developer.	Replace the process unit.
3. Dirty or deteriorated drum.	Replace the process unit.

(4) Background is visible.

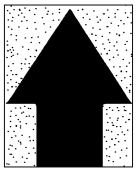

Causes
1. Deteriorated developer.

Causes	Check procedures/corrective measures
1. Deteriorated developer.	Replace the process unit.

(5) A white line appears longitudinally.

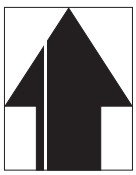

Causes
1. Dirty or flawed main charger wire.
2. Foreign matter in the developing section.
3. Flawed drum.
4. Dirty shading plate.

Causes	Check procedures/corrective measures
1. Dirty or flawed main charger wire.	Replace the process unit.
2. Foreign matter in the developing section.	Replace the process unit.
3. Flawed drum.	Replace the process unit.
4. Dirty shading plate.	Clean the shading plate.

TONER
www.tonerplus.com.ua

(6) A black line appears longitudinally.

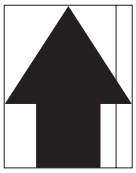

Causes
1. Dirty contact glass.
2. Dirty or flawed drum.
3. Deformed or worn cleaning blade.
4. Dirty scanner mirror.

Causes	Check procedures/corrective measures
1. Dirty contact glass.	Clean the contact glass.
2. Dirty or flawed drum.	Replace the process unit.
3. Deformed or worn cleaning blade.	Replace the process unit.
4. Dirty scanner mirror.	Clean the scanner mirror.

(7) A black line appears laterally.

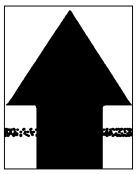

Causes
1. Flawed drum.
2. Dirty developing section.
3. Leaking main charger housing.

Causes	Check procedures/corrective measures
1. Flawed drum.	Replace the process unit.
2. Dirty developing section.	Replace the process unit.
3. Leaking main charger housing.	Replace the process unit.

(8) One side of the print image is darker than the other.

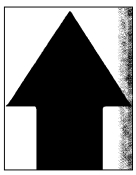

Causes
1. Dirty main charger wire.
2. Defective exposure lamp.

Causes	Check procedures/corrective measures
1. Dirty main charger wire.	Replace the process unit.
2. Defective exposure lamp.	Check if the exposure lamp light is distributed evenly. If not, replace the exposure lamp (see page 1-6-34).

TONER
www.tonerplus.com.ua

(9) Black dots appear on the image.

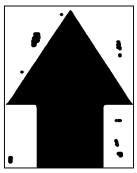

Causes
1. Dirty or flawed drum.
2. Dirty contact glass.
3. Deformed or worn cleaning blade.

Causes	Check procedures/corrective measures
1. Dirty or flawed drum.	Replace the process unit.
2. Dirty contact glass.	Clean the contact glass.
3. Deformed or worn cleaning blade.	Replace the process unit.

(10) Image is blurred.

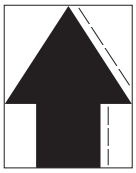

Causes
1. Deformed press roller.
2. Paper conveying section drive problem.

Causes	Check procedures/corrective measures
1. Deformed press roller.	Replace the press roller (see page 1-6-26).
2. Paper conveying section drive problem.	Check the gears and belts and, if necessary, grease them.

(11) The leading edge of the image is consistently misaligned with the original.

Causes
1. Misadjusted leading edge registration.
2. Misadjusted scanner leading edge registration.

Causes	Check procedures/corrective measures
1. Misadjusted leading edge registration.	Readjust the leading edge registration (see page 1-6-41).
2. Misadjusted scanner leading edge registration.	Readjust the scanner leading edge registration (see page 1-6-46).

TONER
www.tonerplus.com.ua

(12) Paper creases.

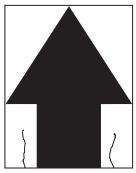

Causes
1. Paper curled.
2. Paper damp.

Causes	Check procedures/corrective measures
1. Paper curled.	Check the paper storage conditions.
2. Paper damp.	Check the paper storage conditions.

(13) Offset occurs.

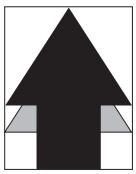

Causes
1. Defective cleaning blade.

Causes	Check procedures/corrective measures
1. Defective cleaning blade.	Replace the process unit.

(14) Image is partly missing.

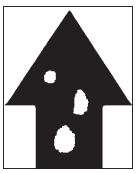

Causes
1. Paper damp.
2. Paper creased.
3. Flawed drum.

Causes	Check procedures/corrective measures
1. Paper damp.	Check the paper storage conditions.
2. Paper creased.	Replace the paper.
3. Flawed drum.	Replace the process unit.

TONER
www.tonerplus.com.ua

(15) Fusing is poor.

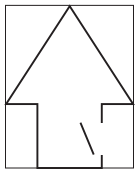

Causes
1. Wrong paper.
2. Flawed press roller.

Causes	Check procedures/corrective measures
1. Wrong paper.	Check if the paper meets specifications.
2. Flawed press roller.	Replace the press roller (see page 1-6-26).

(16) Image center does not align with the original center.

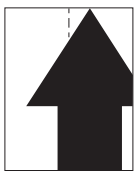

Causes
1. Misadjusted center line of image printing.
2. Misadjusted scanner center line.
3. Original placed incorrectly.

Causes	Check procedures/corrective measures
1. Misadjusted center line of image printing.	Readjust the center line of image printing (see page 1-6-42).
2. Misadjusted scanner center line.	Readjust the scanner center line (see page 1-6-47).
3. Original placed incorrectly.	Place the original correctly.

TONER
www.tonerplus.com.ua

1-5-4 Electrical problems

Problem	Causes	Check procedures/corrective measures
(1) The machine does not operate when the power switch is turned on.	No electricity at the power outlet.	Measure the input voltage.
	The power cord is not plugged in properly.	Check the contact between the power plug and the outlet.
	The front cover is not closed completely.	Check the front cover.
	Broken power cord.	Check for continuity. If none, replace the cord.
	Defective power switch.	Check for continuity across the contacts. If none, replace the power switch.
	Blown fuse in the power supply PWB.	Check for continuity. If none, remove the cause of blowing and replace the fuse.
	Defective interlock switch.	Check for continuity across the contacts of switch. If none, replace the switch.
	Defective power supply PWB.	With AC present, check for 24 V DC at YC2-6 and 5 V DC at YC2-1 on the power supply PWB. If none, replace the power supply PWB.
(2) The main motor does not operate (C2000).	Poor contact in the main motor connector terminals.	Reinsert the connector. Also check for continuity within the connector cable. If none, remedy or replace the cable.
	Broken main motor gear.	Check visually and replace the main motor if necessary.
	Defective main motor.	Check if the main motor operates and replace the main motor if necessary.
	Defective engine PWB.	Check if YC4-9 on the engine PWB go low when the main motor is operated. If not, replace the engine PWB.
(3) The scanner motor does not operate.	Broken scanner motor coil.	Check for continuity across the coil. If none, replace the scanner motor.
	Poor contact in the scanner motor connector terminals.	Reinsert the connector. Also check for continuity within the connector cable. If none, remedy or replace the cable.
(4) Cooling fan does not operate.	Broken Cooling fan coil.	Check for continuity across the coil. If none, replace Cooling fan.
	Poor contact in the Cooling fan connector terminals.	Reinsert the connector. Also check for continuity within the connector cable. If none, remedy or replace the cable.
(5) The feed clutch does not operate.	Broken feed clutch coil.	Check for continuity across the coil. If none, replace the feed clutch.
	Poor contact in the feed clutch connector terminals.	Reinsert the connector. Also check for continuity within the connector cable. If none, remedy or replace the cable.
	Defective engine PWB.	Check if YC4-1 on the engine PWB goes low when the feed clutch is turned on. If not, replace the engine PWB.

TONER
www.tonerplus.com.ua

Problem	Causes	Check procedures/corrective measures
(6) The MP feed clutch does not operate.	Broken MP feed clutch coil.	Check for continuity across the coil. If none, replace the MP feed clutch.
	Poor contact in the MP feed clutch connector terminals.	Reinsert the connector. Also check for continuity within the connector cable. If none, remedy or replace the cable.
	Defective engine PWB.	Check if YC5-2 on the engine PWB goes low when the MP feed clutch is turned on. If not, replace the engine PWB.
(7) The registration clutch does not operate.	Broken registration clutch coil.	Check for continuity across the coil. If none, replace the registration clutch.
	Poor contact in the registration clutch connector terminals.	Reinsert the connector. Also check for continuity within the connector cable. If none, remedy or replace the cable.
	Defective engine PWB.	Check if YC6-2 on the engine PWB goes low when the registration clutch is turned on. If not, replace the engine PWB.
(8) The eraser lamp does not turn on.	Poor contact in the eraser lamp connector terminals.	Reinsert the connector. Also check for continuity within the connector cable. If none, remedy or replace the cable.
	Defective eraser lamp.	Check for continuity. If none, replace the eraser lamp.
	Defective engine PWB.	If the eraser lamp turns on when YC14-2 on the engine PWB is held low, replace the engine PWB.
(9) The exposure lamp does not turn on.	Poor contact in the exposure lamp connector terminals.	Reinsert the connector. Also check for continuity within the connector cable. If none, remedy or replace the cable.
	Defective scanner PWB.	Check if the exposure lamp turns on with YC7-1 and YC7-2 on the scanner PWB goes low. If not, replace the scanner PWB.
	Defective engine PWB.	Check if the exposure lamp turns on with YC11-10 on the engine PWB goes low. If not, replace the engine PWB.
(10) The exposure lamp does not turn off.	Defective scanner PWB.	Check if the exposure lamp turns on with YC7-1 and YC7-2 on the scanner PWB goes low. If not, replace the scanner PWB.
	Defective engine PWB.	Check if the exposure lamp turns on with YC11-10 on the engine PWB goes low. If not, replace the engine PWB.
(11) The heater lamp does not turn on.	Broken wire in heater lamp.	Check for continuity across heater lamp. If none, replace the heater lamp.
	Thermal cutout triggered.	Check for continuity across thermal cutout. If none, remove the cause and replace the thermal cutout.
(12) The heater lamp does not turn off.	Broken heater lamp wire.	Measure the resistance. If it is ∞Ω, replace the thermistor.
	Dirty sensor part of the thermistor.	Check visually and clean the thermistor sensor parts.

TONER
www.tonerplus.com.ua

Problem	Causes	Check procedures/corrective measures
(13) Main charging is not performed.	Broken main charger wire.	See page 1-5-16.
	Leaking main charger housing.	
	Poor contact in the high voltage PWB connector terminals.	
	Defective engine PWB.	
	Defective high voltage PWB.	
(14) Transfer charging is not performed.	Poor contact in the high voltage PWB connector terminals.	See page 1-5-16.
	Defective engine PWB.	
	Defective high voltage PWB.	
(15) A paper jam in the paper feed or exit section is indicated when the power switch is turned on.	A piece of paper torn from paper is caught around registration sensor or exit sensor.	Check and remove if any.
	Defective registration sensor.	Check if YC8-7 on the engine PWB remains low when the registration sensor is turned on and off. If it does, replace the registration sensor.
	Defective exit sensor.	Check if YC7-7 on the engine PWB remains low when the exit sensor is turned on and off. If it does, replace the exit sensor.
(16) The message requesting cover to be closed is displayed when the front cover is closed.	Poor contact in the connector terminals of interlock switch.	Reinsert the connector. Also check for continuity within the connector cable. If none, remedy or replace the cable.
	Defective interlock switch.	Check for continuity across switch. If there is no continuity when the switch is on, replace it.
(17) Others.	Wiring is broken, shorted or makes poor contact.	Check for continuity. If none, repair.
	Noise.	Locate the source of noise and remove.

TONER
www.tonerplus.com.ua

1-5-5 Mechanical problems

Problem	Causes/check procedures	Corrective measures
(1) No primary paper feed.	Check if the surfaces of the feed roller and MP feed roller are dirty with paper powder.	Clean with isopropyl alcohol.
	Check if the feed roller and MP feed roller are deformed.	Check visually and replace any deformed rollers (see pages 1-6-5, 6).
	Electrical problem with the feed clutch and MP feed clutch.	See pages 1-5-22, 23.
(2) No secondary paper feed.	Check if the surfaces of the upper and lower registration rollers are dirty with paper powder.	Clean with isopropyl alcohol.
	Electrical problem with the registration clutch.	See page 1-5-23.
(3) Skewed paper feed.	Deformed width guide in a cassette.	Repair or replace if necessary .
(4) The scanner does not travel.	The scanner motor malfunctions.	See page 1-5-22.
(5) Multiple sheets of paper are fed at one time.	Deformed cassette claw.	Check the cassette claw visually and correct or replace if necessary.
(6) Paper jams.	Check if the paper is curled.	Change the paper.
	Deformed guides along the paper conveying path.	Check visually and replace any deformed guides.
	Check if the contact between the upper and lower registration rollers is correct.	Check visually and remedy if necessary.
	Check if the press roller is extremely dirty or deformed.	Clean or replace the press roller.
	Check if the contact between the heat roller and its separation claws is correct.	Repair if any springs are off the separation claws.
(7) Abnormal noise is heard.	Check if the rollers and gears operate smoothly.	Grease the bearings and gears.
	Check if the following electromagnetic clutches are installed correctly: feed clutch, MP feed clutch and registration clutch.	Correct.

TONER
www.tonerplus.com.ua

1-6-1 Precautions for assembly and disassembly

(1) Precautions

- Be sure to turn the power switch off and disconnect the power plug before starting disassembly.
- When handling PWBs, do not touch connectors with bare hands or damage the board.
- Do not touch any PWB containing ICs with bare hands or any object prone to static charge.
- Use only the specified parts to replace the fuser unit thermostat. Never substitute electric wires, as the machine may be seriously damaged.
- Do not perform aging without the waste toner tank installed during maintenance service.
- Prepare the following as test originals:
  1. NTC (new test chart)
  2. NPTC (newspaper test chart)

TONER+
www.tonerplus.com.ua

1-6-2 Removing the process unit

1. Open the front top cover.
2. Open the front cover.
3. Lift the process unit together with the toner container out of the machine.

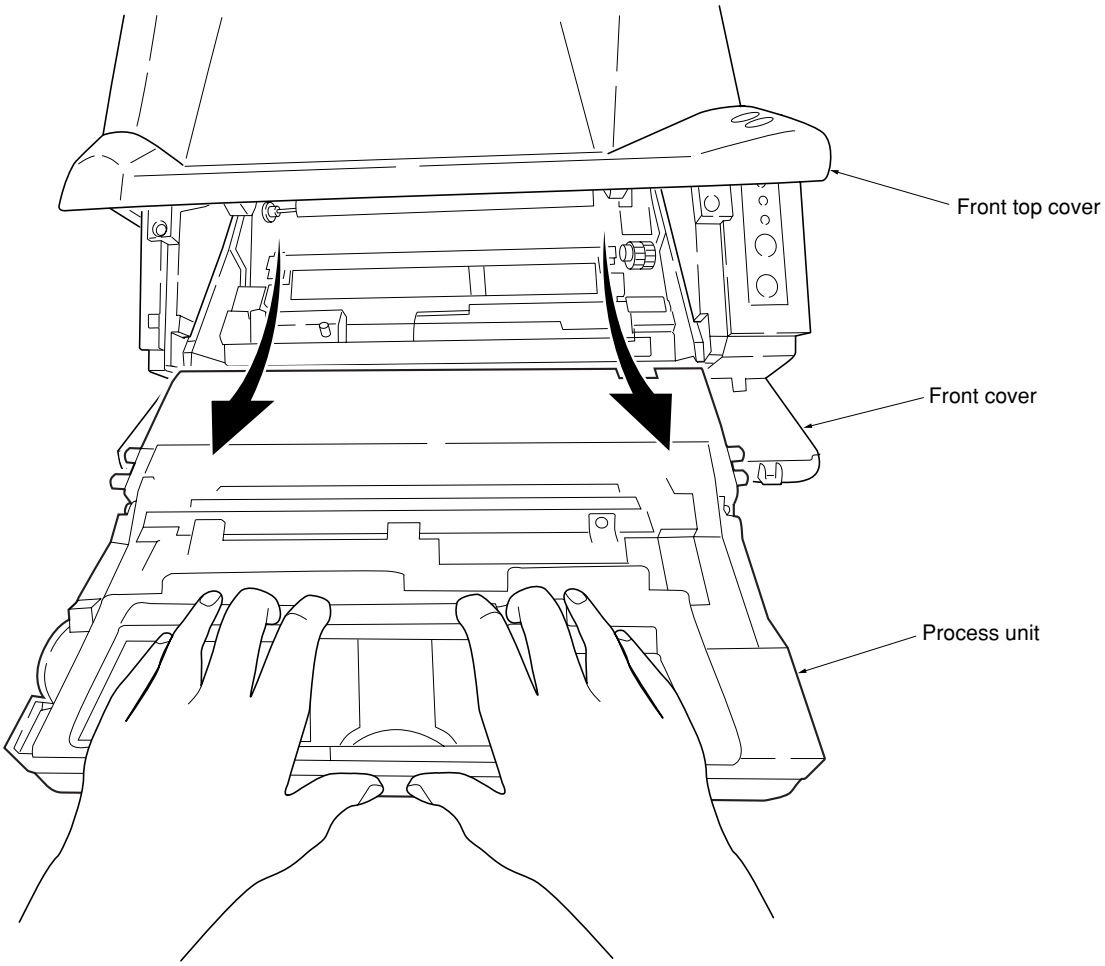

Figure 1-6-1 Removing the process unit

CAUTIONS

- After removing the process unit, seal it in the protective bag and place it on flat surface. Do not place the process unit in a dusty area.
- Do not give impact to the process unit.
- Do not place floppy disks near the process unit.
- If the process unit is replaced for some reason, the toner installation mode must be run.
  1. Run maintenance mode U157 to clear the developing drive time.
  2. Run maintenance mode U130 to turn the setting ON.
  3. Turn the power switch off and then on again.

  The toner installation mode starts to add toner to the developing section of the process unit (approximately 15 minutes).

  * Run the toner installation mode only when you have replaced the process unit with a new one. (Do not run it when toner remains in the process unit.)

TONER
www.tonerplus.com.ua

1-6-3 Removing the principal outer covers

(1) Removing the front top cover/face-down output tray

1. Remove the screw and then remove the memory cover.
2. Remove the screw and then remove the rear cover.

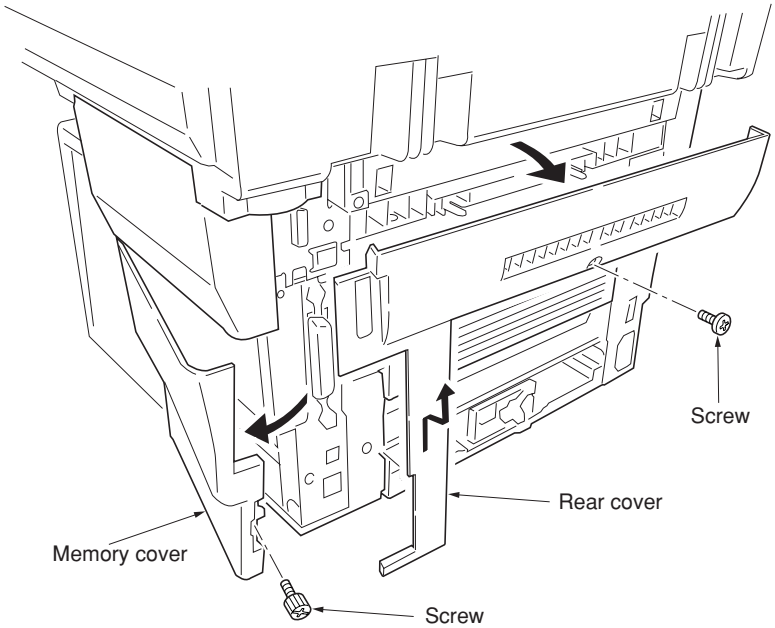

Figure 1-6-2 Removing the memory cover and rear cover

3. While unlatching the two latches and then remove the front top cover/face-down output tray.

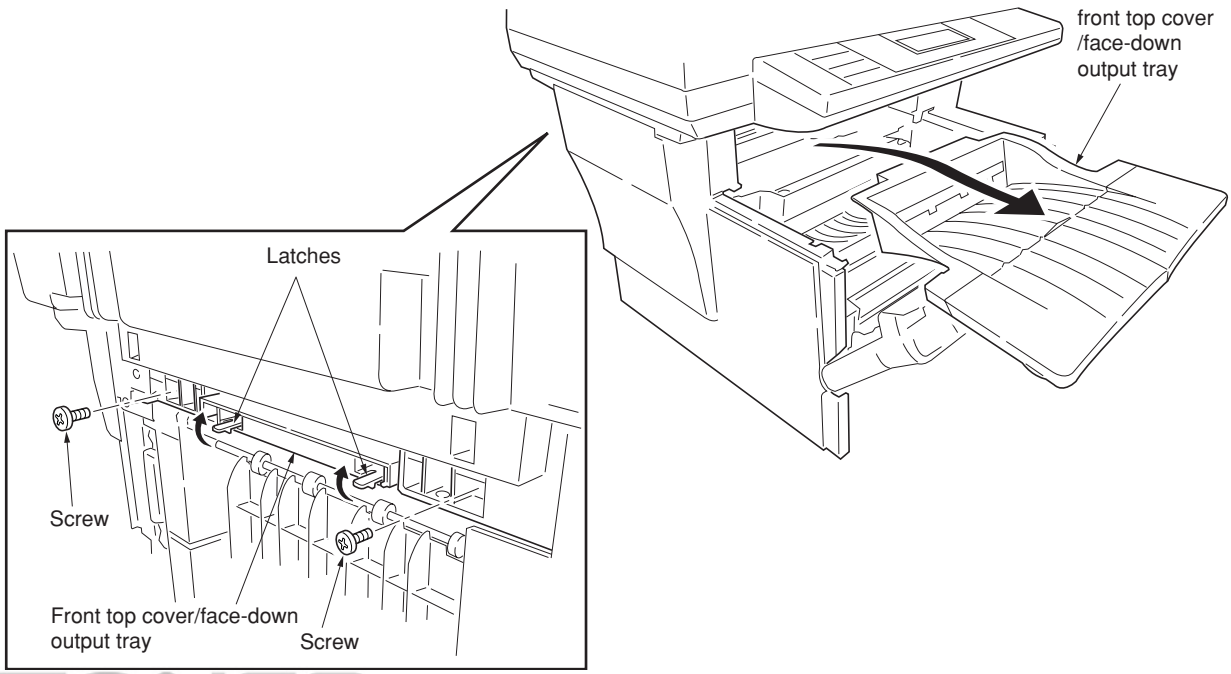

Figure 1-6-3 Removing the front top cover/face-down output tray

TONER
www.tonerplus.com.ua

(2) Removing the right cover

1. Remove the front top cover/face-down output tray (see page1-6-3).
2. Remove the memory cover (see page 1-6-3).
3. Unlatch the snaps and hook, remove the right cover.

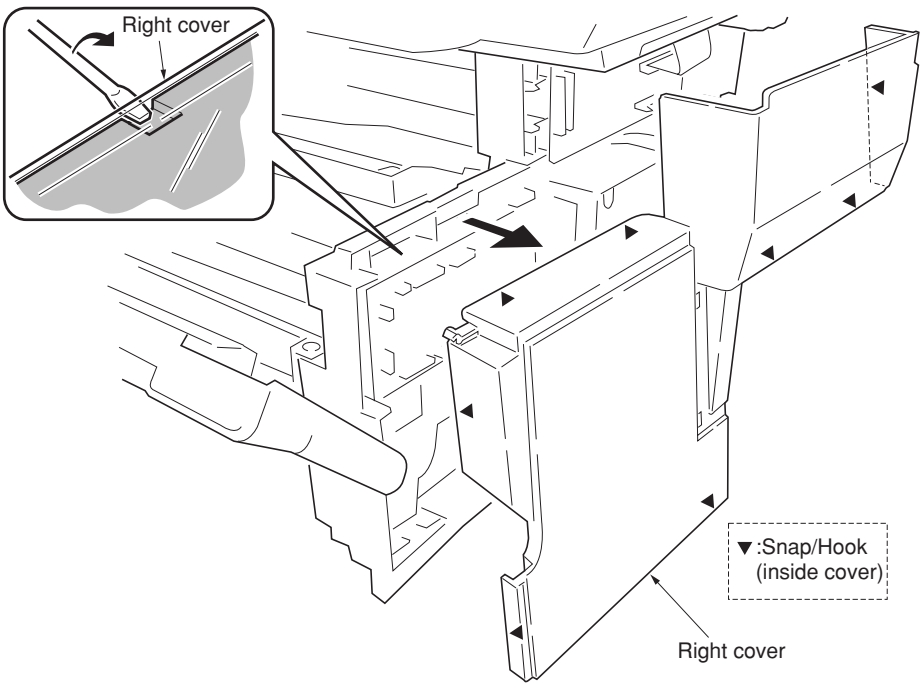

Figure 1-6-4 Removing the right cover

(3) Removing the left cover

1. Remove the front top cover/face-down output tray (see page1-6-3).
2. Unlatch the snaps and hooks, remove the left cover.

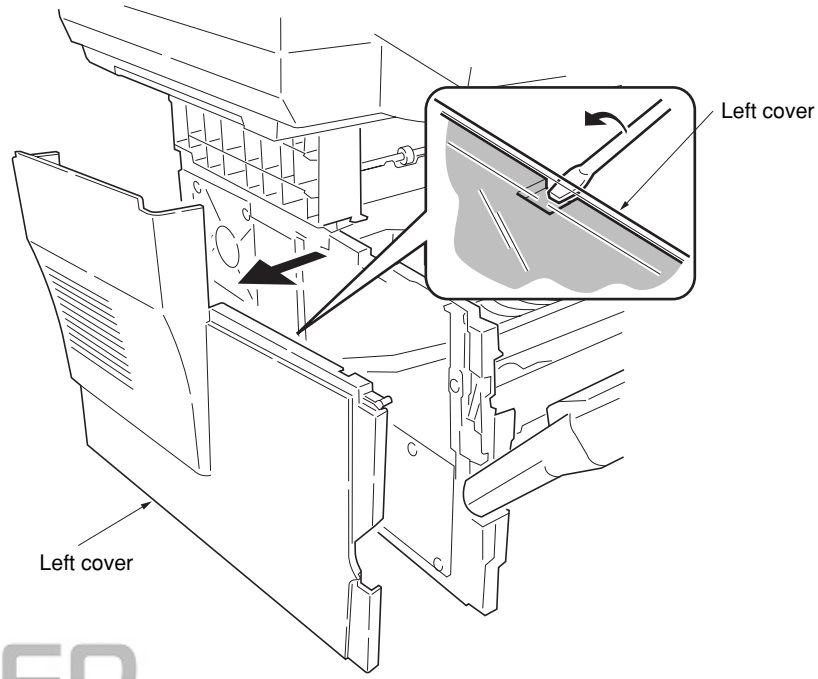

TONER
www.tonerplus.com.ua

Figure 1-6-5 Removing the left cover

1-6-4 Removing the feed roller

CAUTION
When refit the feed roller, fit the D-cut shaft into the D-shape hole of the feed roller.

1. Remove the cassette and the process unit (see page 1-6-2).
2. Stand the machine the front side up.
3. Move the feed roller in the direction Ⓐ, and remove the feed roller.

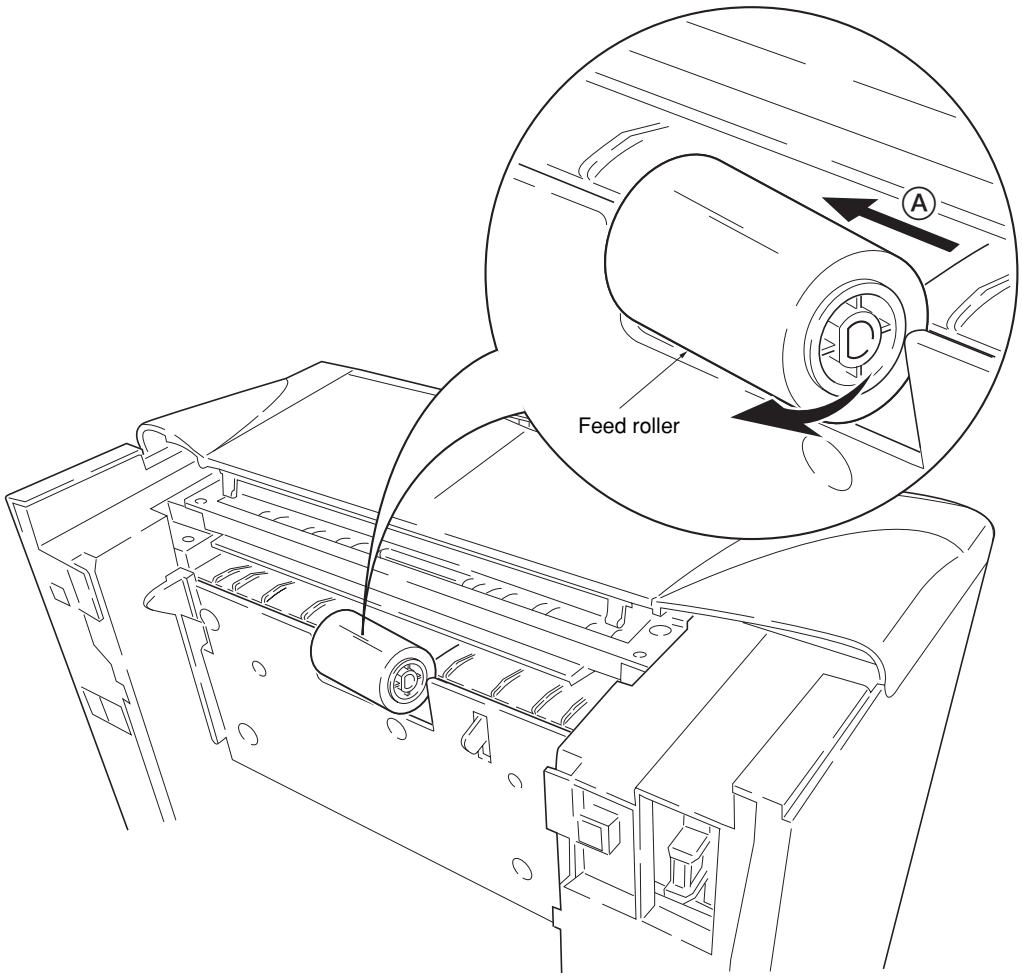

Figure 1-6-6 Removing the feed roller

TONER
www.tonerplus.com.ua

1-6-5 Removing the MP feed roller

1. Remove the engine PWB (see page 1-6-9).
2. Remove the screw.
3. Remove the grounding plate.
4. Remove the stop ring .
5. Remove the MP feed clutch.

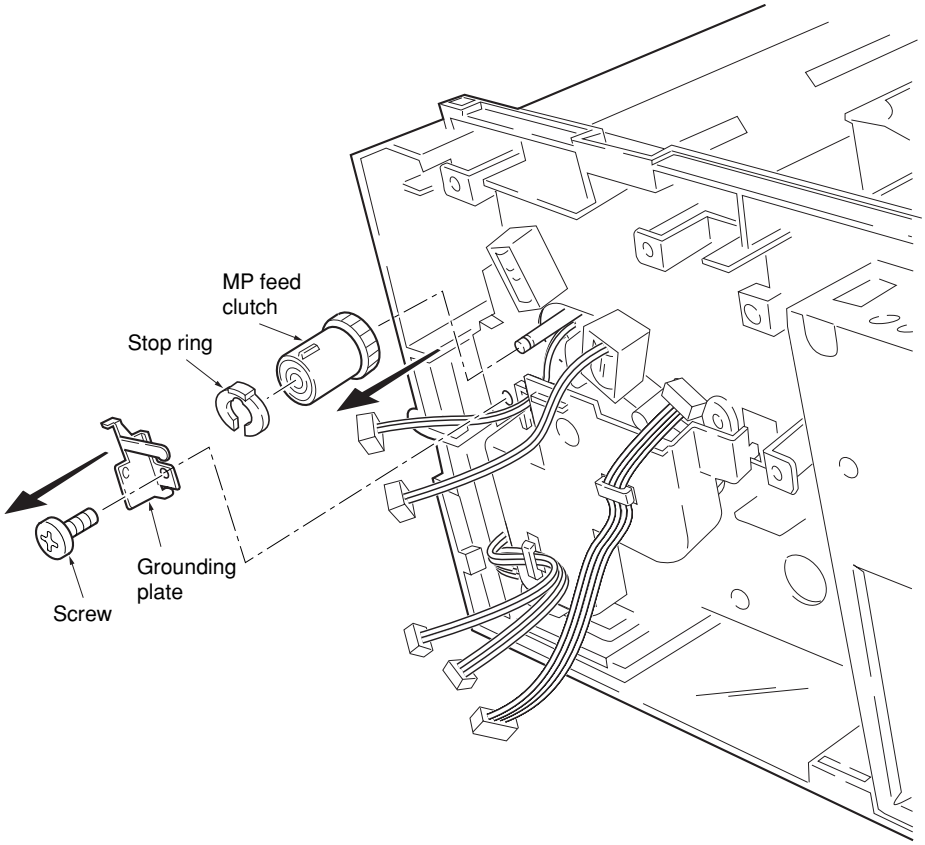

Figure 1-6-7 Removing the MP feed clutch

TONER
www.tonerplus.com.ua

6. Remove the screw.
7. Remove the toner sensor and spring.
8. Remove two screws.
9. While pressing the latch by using the driver and then remove the MP feed unit.

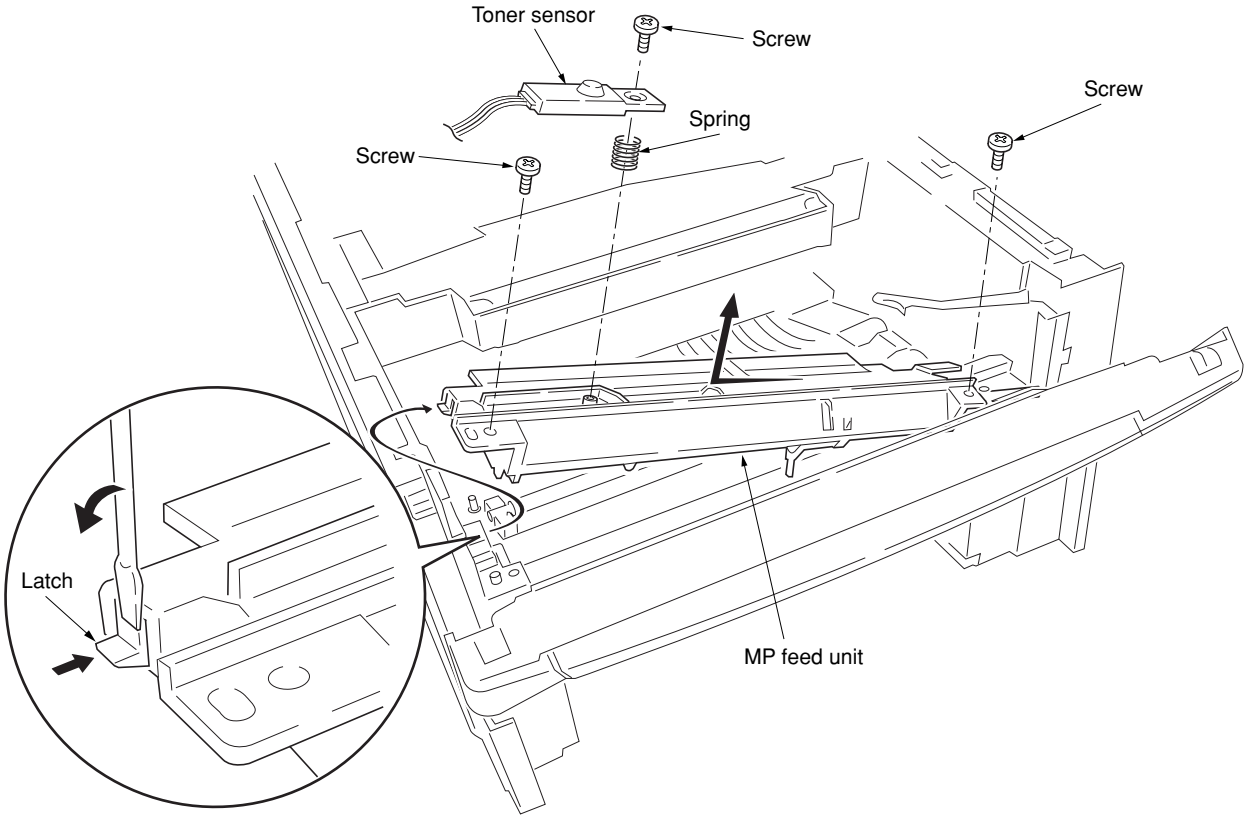

Figure 1-6-8 Removing the MP feed unit

10. Remove the stop ring and then remove the MP feed roller.

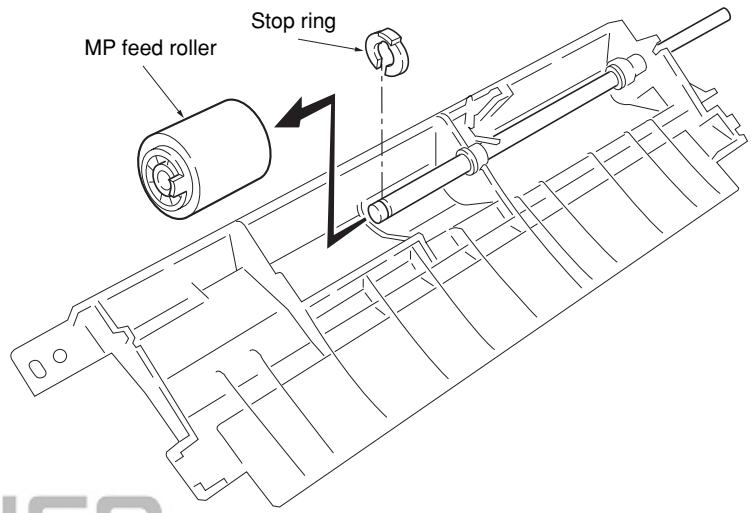

TONER
www.tonerplus.com.ua

Figure 1-6-9 Removing the MP feed roller

1-6-6 Removing the transfer roller

CAUTION
Do not touch the transfer roller (sponge) surface. Oil and dust (particles of paper, etc.) on the transfer roller can significantly deteriorate the print quality (white spots, etc.).

When refitting the bushes and springs, make sure to refit the black colored bush and spring on the left side. Also, observe the correct direction to which the bush is fit in reference to the paper passing direction.

1. Remove the process unit (see page 1-6-2).
2. Remove the transfer roller from the both bushes.

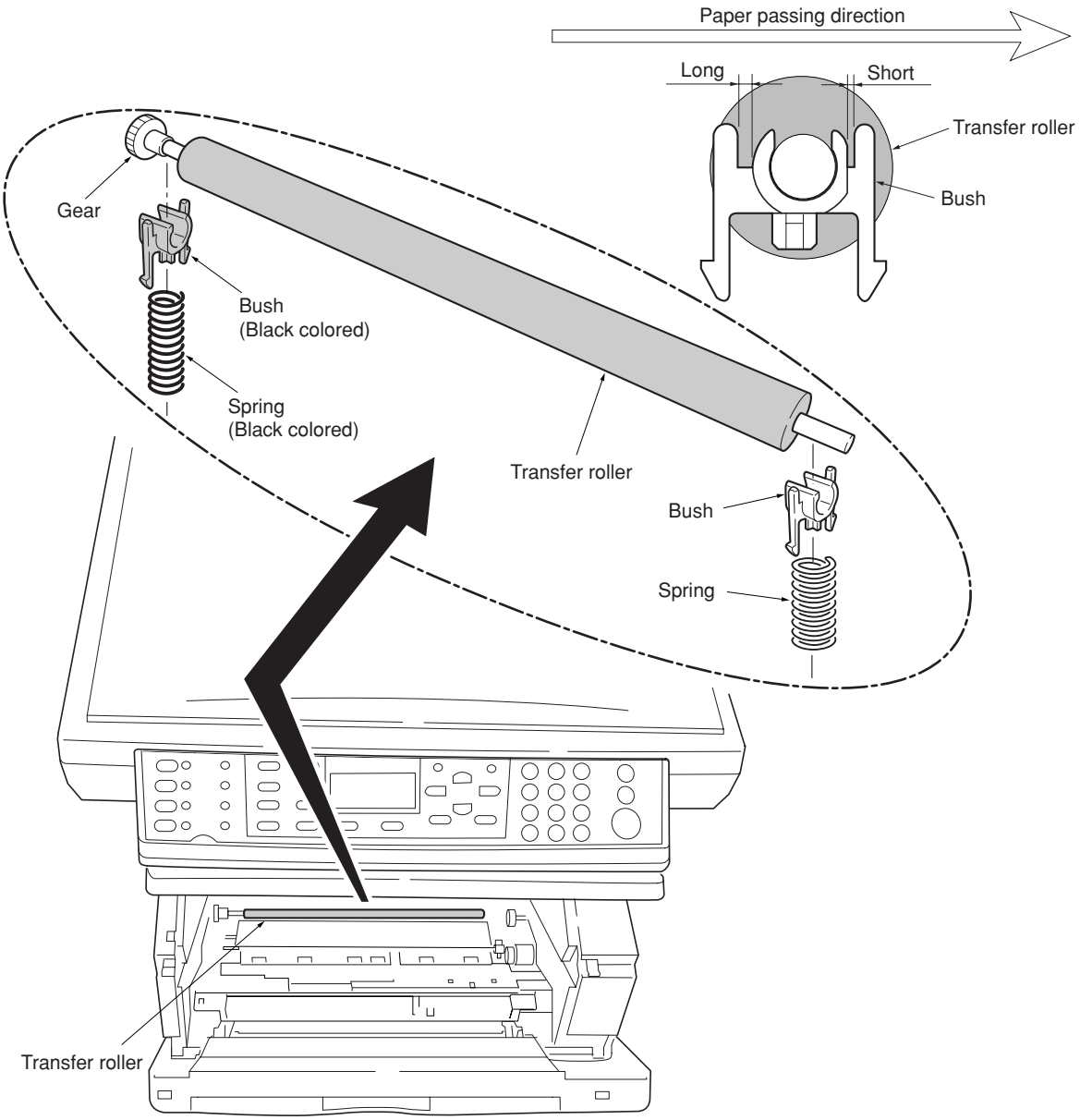

Figure 1-6-10 Removing the transfer roller

TONER
www.tonerplus.com.ua

1-6-7 Removing the primary circuit PWBs

(1) Removing the engine PWB

1. Remove the right cover (see page 1-6-4).
2. Remove all (twelve) connectors from the engine PWB.
3. Remove three screws.
4. Remove the engine PWB.

* When replacing the PWB with a new PWB, remove the EEPROM from the old PWB and mount it to the new PWB.

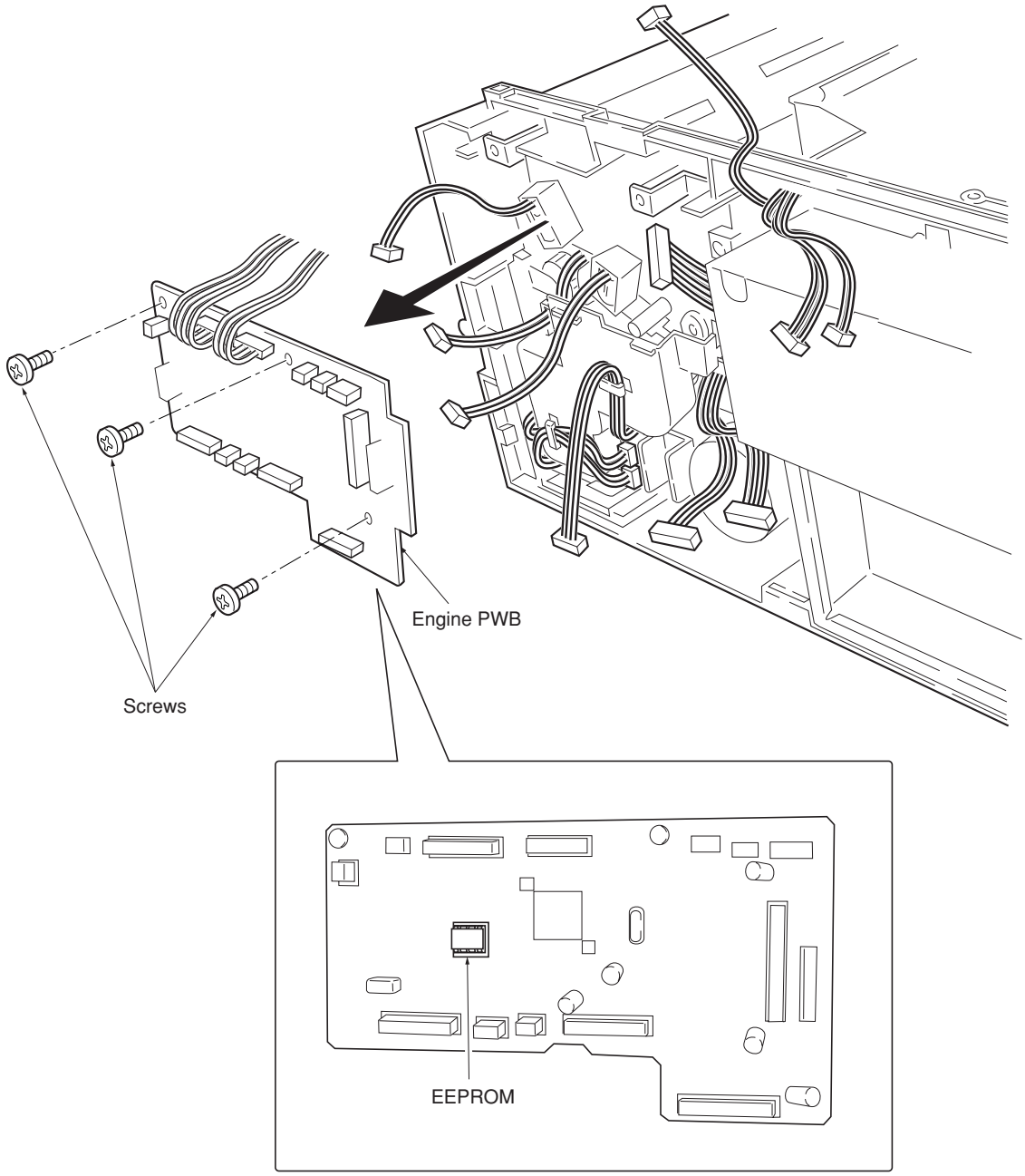

Figure 1-6-11 Removing the engine PWB

TONER
www.tonerplus.com.ua

(2) Removing the main PWB

1. Remove the right cover (see page 1-6-4).
2. Remove the connector.
3. Remove the screw and then remove the speaker.

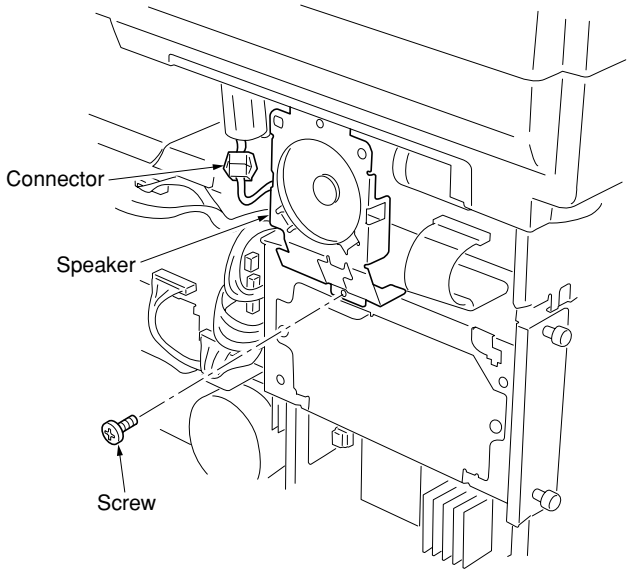

Figure 1-6-12 Removing the speaker

4. Remove three connectors.
5. Remove the flexible flat cable.
6. Remove seven screws and then remove the main controller shield (with main PWB).

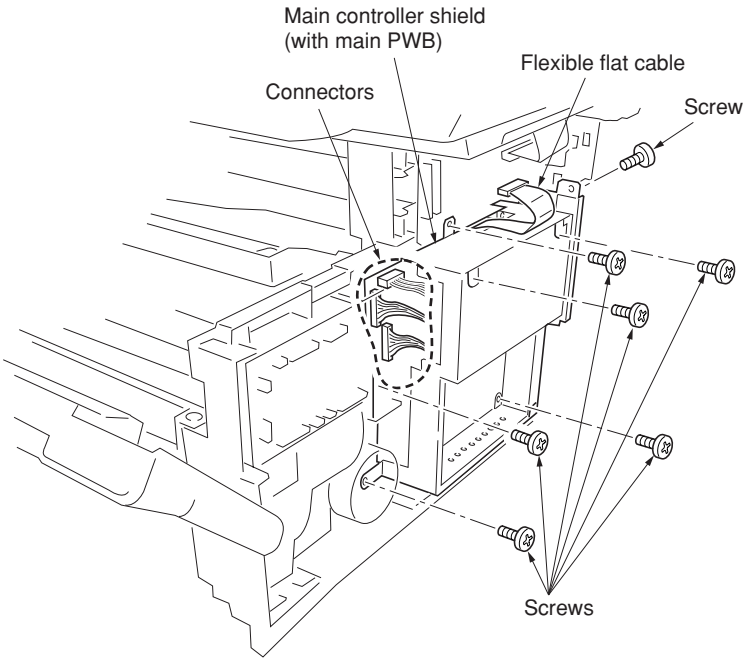

Figure 1-6-13 Removing the main controller shield (with main PWB)

TONER
www.tonerplus.com.ua

7. Remove two screws at the back of the main PWB.
 * When replacing the PWB with a new PWB, remove the EEPROM from the old PWB and mount it to the new PWB.

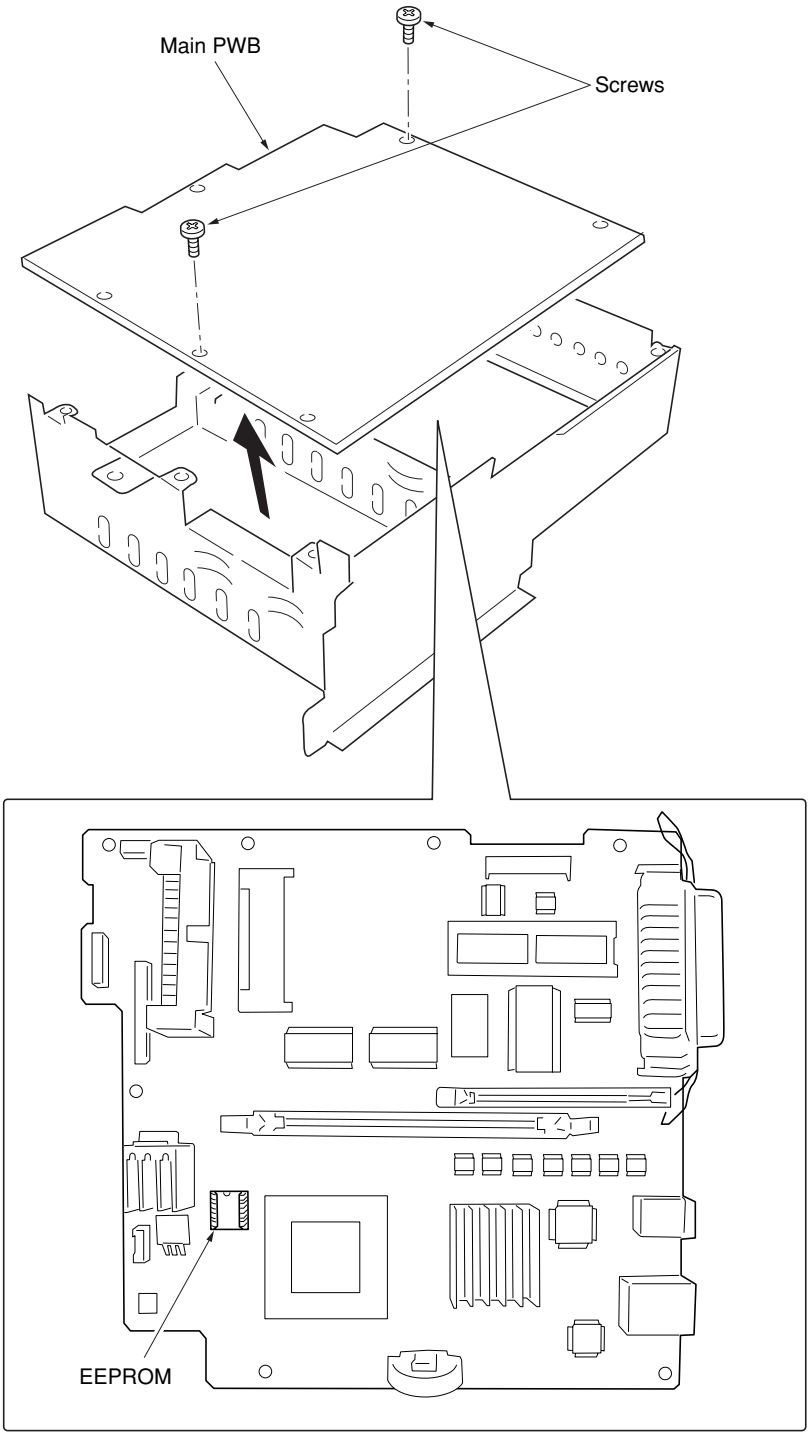

Figure 1-6-14 Removing the main PWB

TONER
www.tonerplus.com.ua

(3) Removing the power supply PWB and high voltage PWB

1. Remove the process unit (see page 1-6-2).
2. Remove the left cover (see page 1-6-4).
3. Remove three connectors from the power supply PWB.
4. Remove eight screws.
5. Remove the power supply PWB and high voltage PWB. (Note: The high voltage PWB is directly connected to the bias PWB.)
6. Separate the high voltage PWB from the power supply PWB.

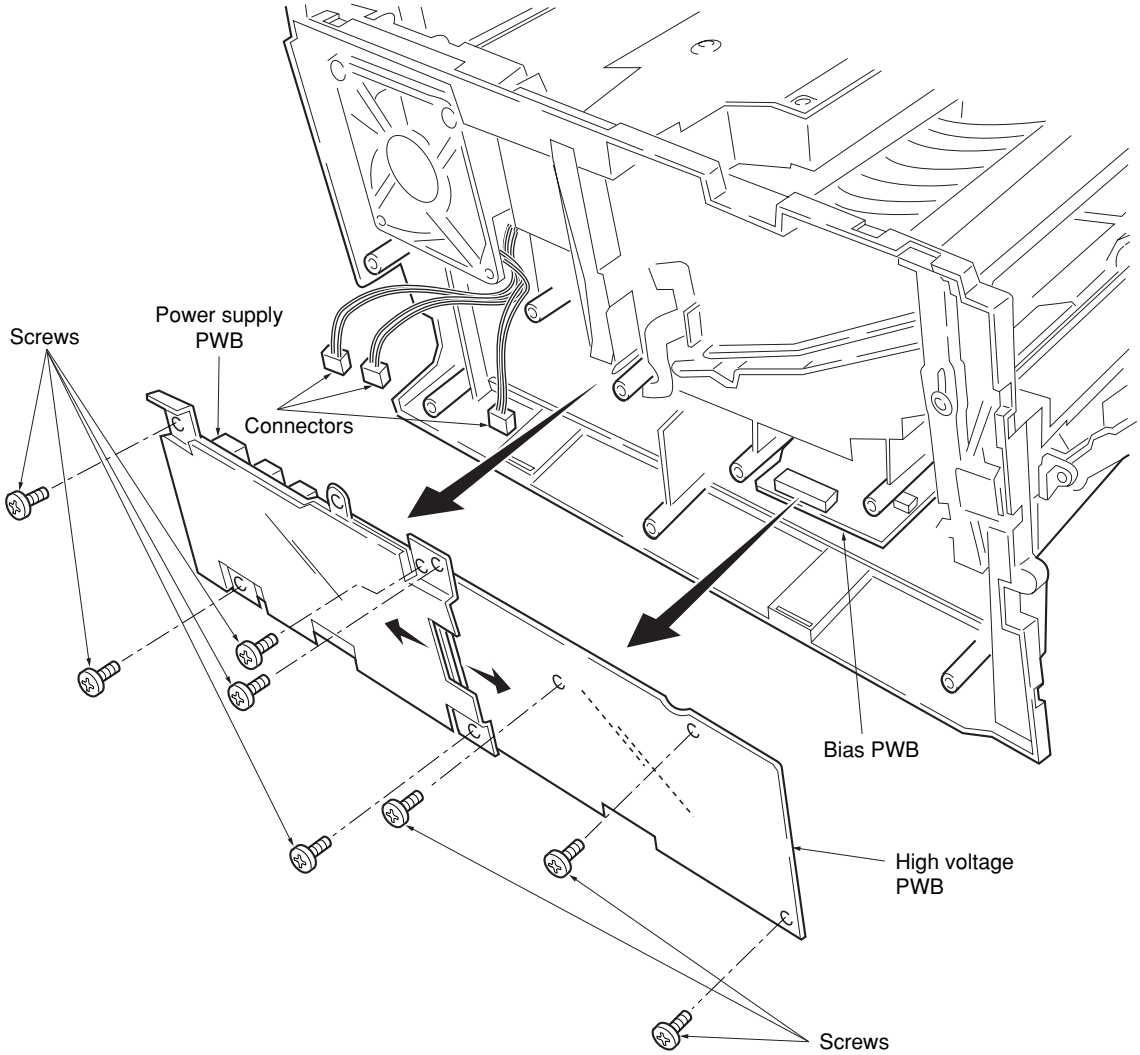

Figure 1-6-15 Removing the power supply PWB and high voltage PWB

TONER
www.tonerplus.com.ua

(4) Removing the bias PWB

1. Remove the cassette and process unit (see page 1-6-2).
2. Remove the left cover (see page 1-6-4).
3. Remove the power supply PWB and high voltage PWB (see page 1-6-12).
4. Stand the machine with the front side up.
5. Remove the connector from the bias PWB.
6. Remove five screws.
7. Remove the bottom cover.
8. Remove two connectors from the bias PWB.
9. Remove the bias PWB.

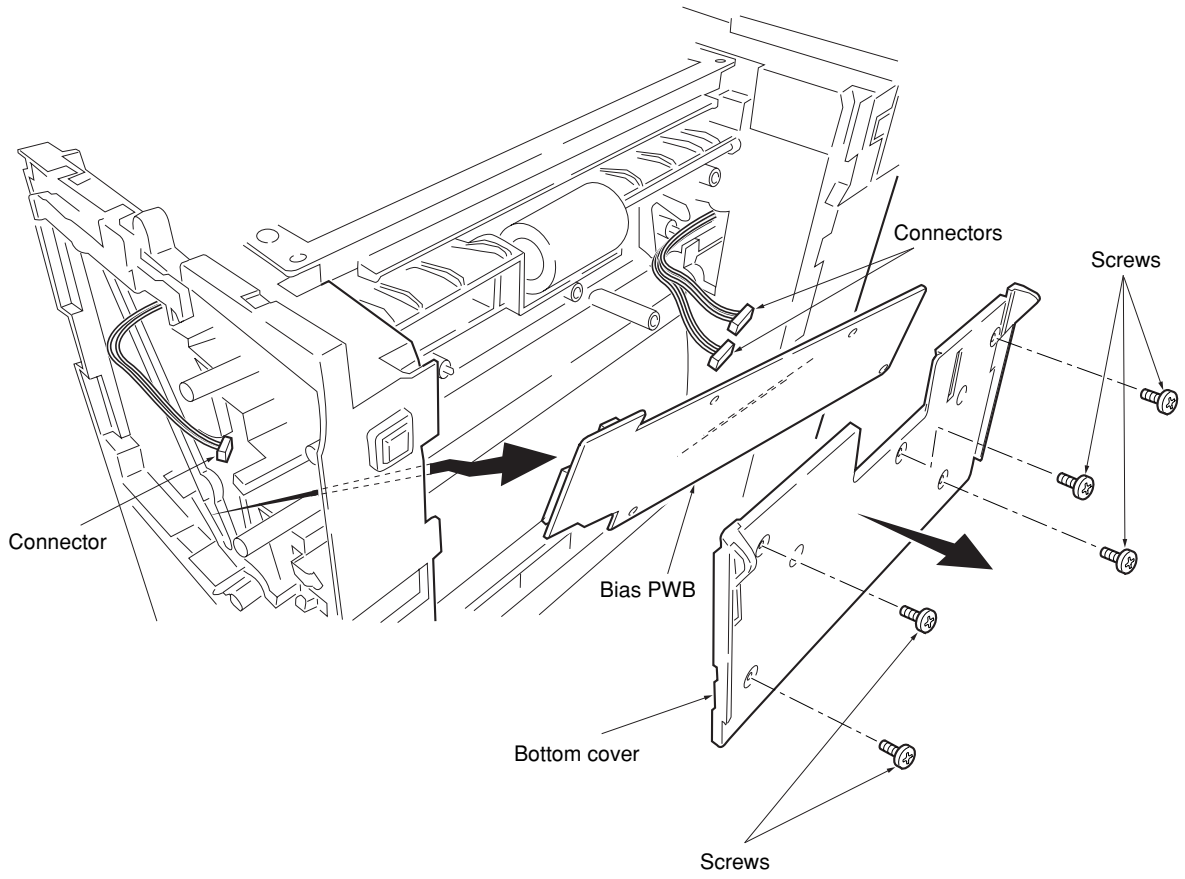

Figure 1-6-16 Removing the bias PWB

TONER
www.tonerplus.com.ua

1-6-8 Removing the main motor and drive unit

1. Remove the cassette and process unit (see page 1-6-2).
2. Remove the right cover (see page 1-6-4).
3. Remove three connectors from the main motor.
4. Remove four screws.
5. Remove main motor.

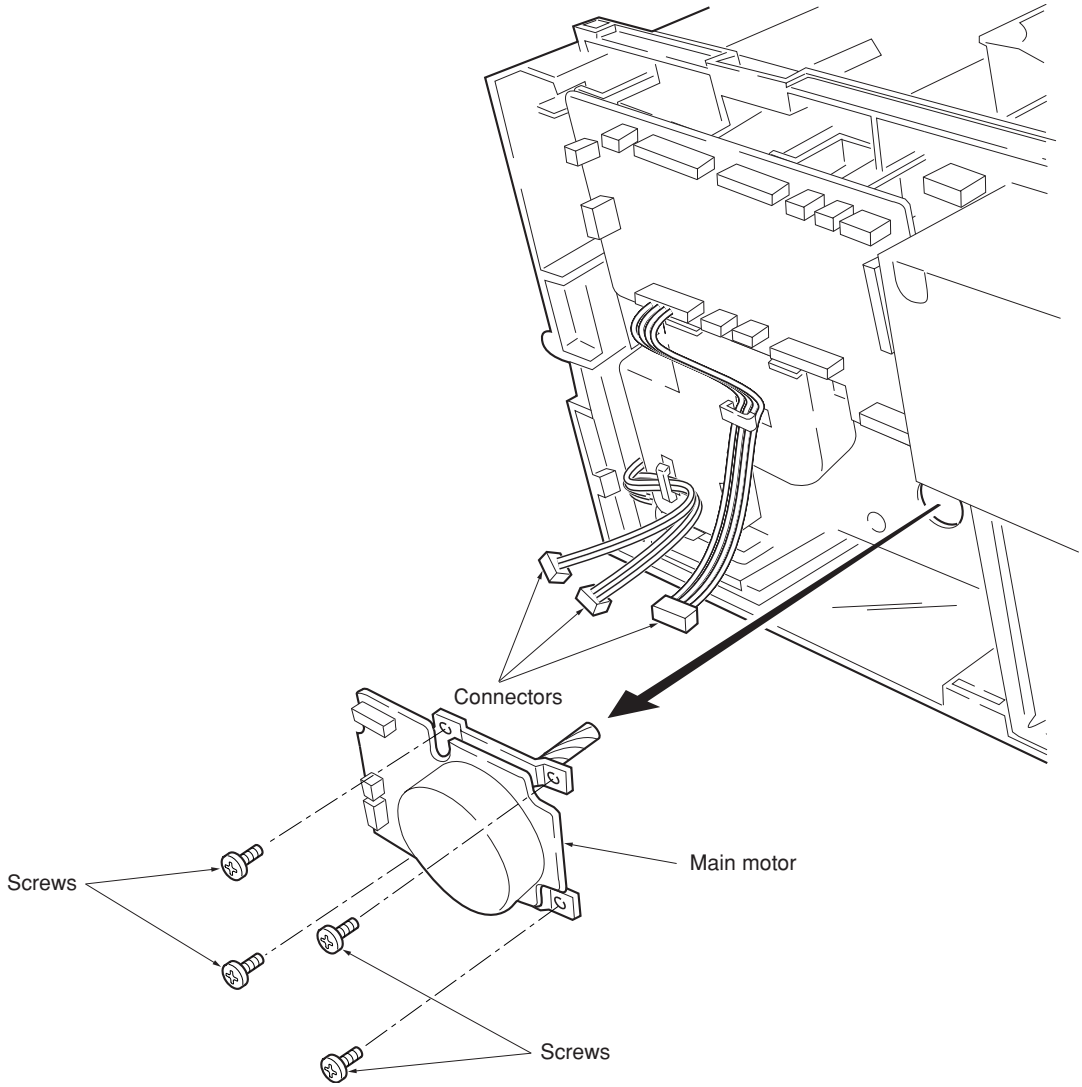

Figure 1-6-17 Removing the main motor

TONER
www.tonerplus.com.ua

6. Remove the engine PWB (see page 1-6-9).
7. Remove wires from wire saddles on the cord cover.
8. Remove the screw.
9. Remove the cord cover.

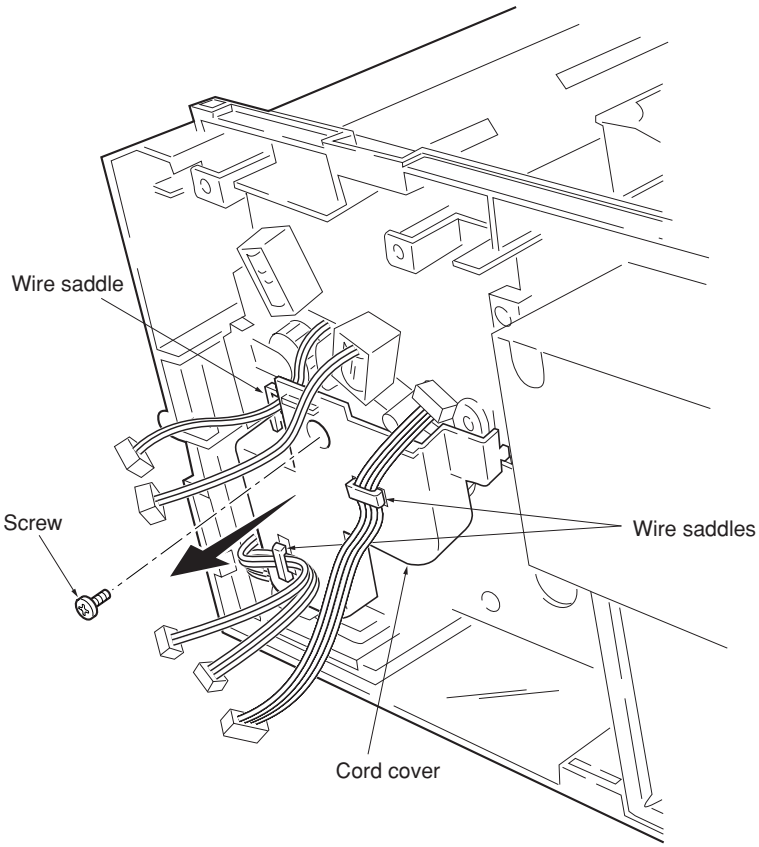

Figure 1-6-18 Removing the cord cover

TONER
www.tonerplus.com.ua

10. Remove the main PWB (see page 1-6-10).
11. Remove the screw and then remove the grounding plate.
12. Remove the screw and then remove the feed clutch.
13. Remove three stop rings.
14. Remove MP feed clutch (gear), feed clutch (gear), and registration clutch (gear).

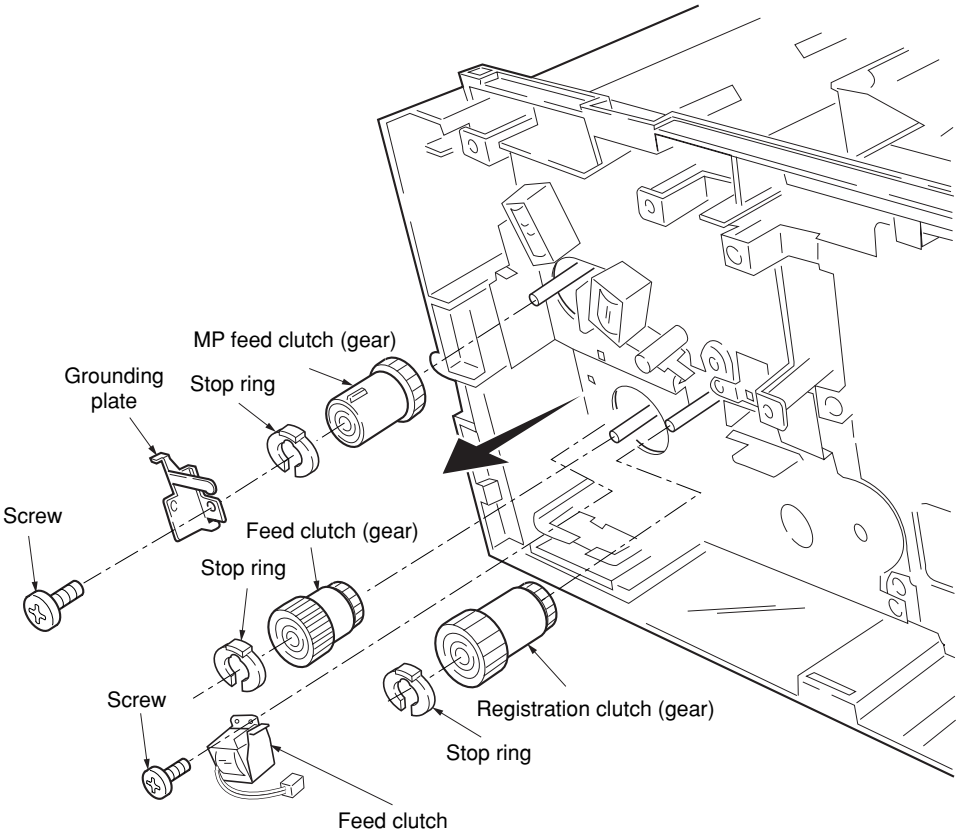

Figure 1-6-19 Removing the clutches

TONER
www.tonerplus.com.ua

15. Remove four screws.
16. Remove the drive unit.

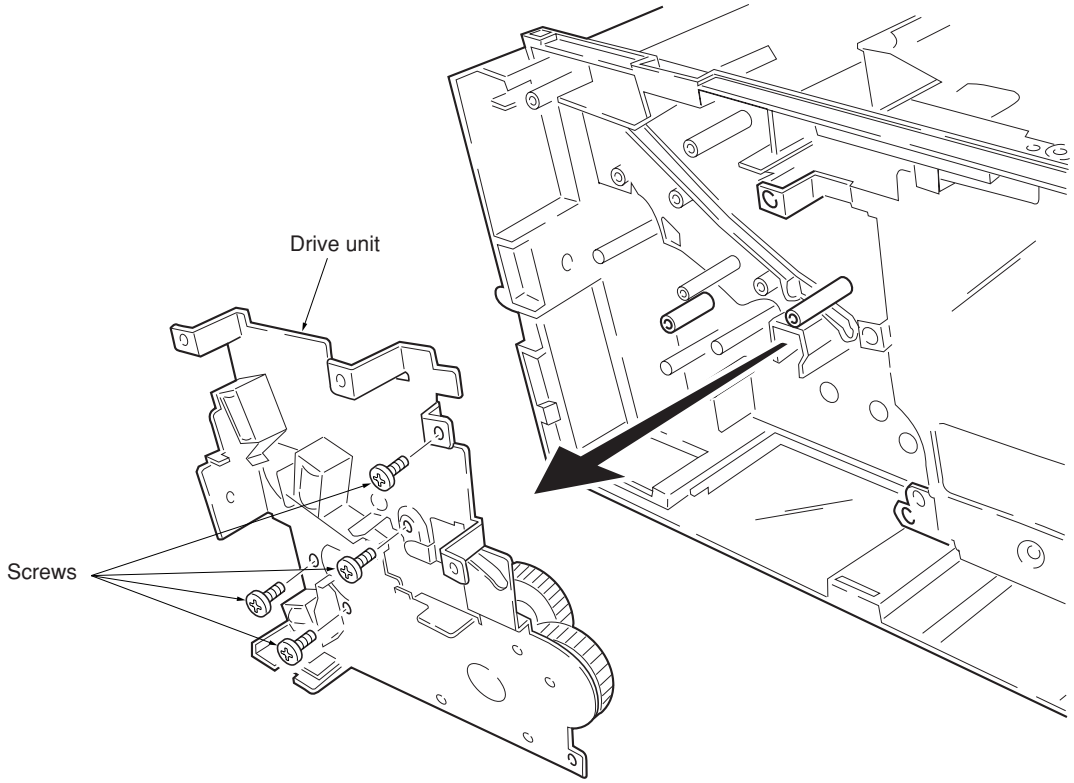

Figure 1-6-20 Removing the drive unit

TONER
www.tonerplus.com.ua

1-6-9 Removing and splitting the fuser unit

WARNING

• The fuser unit is hot after the machine was running. Wait until it cools down.

CAUTION

• When refitting the fuser unit, make sure the fuser unit gear and the machine's drive gear are properly meshed with each other. For this, rotate the main motor several turns before fusing screws.

1. Remove the rear cover (see page 1-6-3).
2. Remove the right and left cover (see page 1-6-4).
3. Remove two connectors.
4. Remove two screws.
5. Remove the fuser unit.

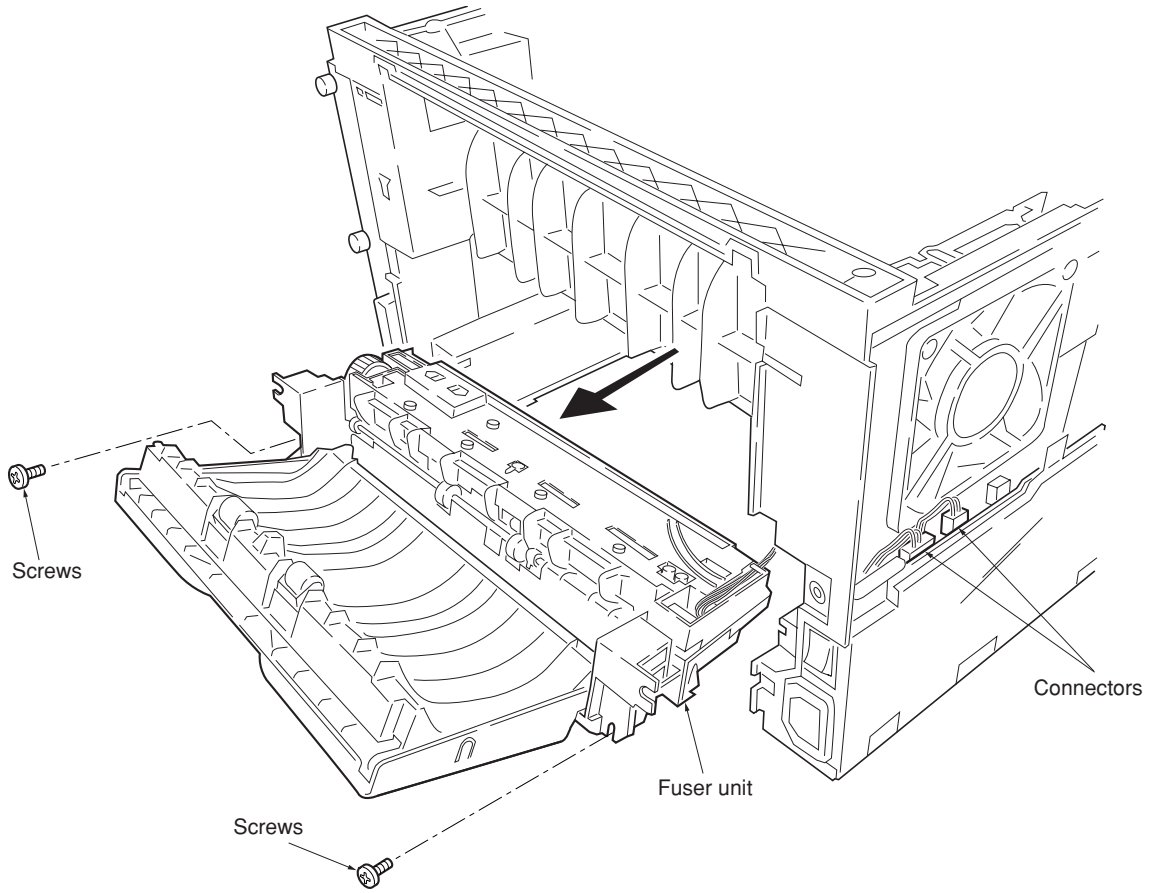

Figure 1-6-21 Removing the fuser unit

TONER
www.tonerplus.com.ua

6. Remove two screws.
7. Open and split the fuser unit.

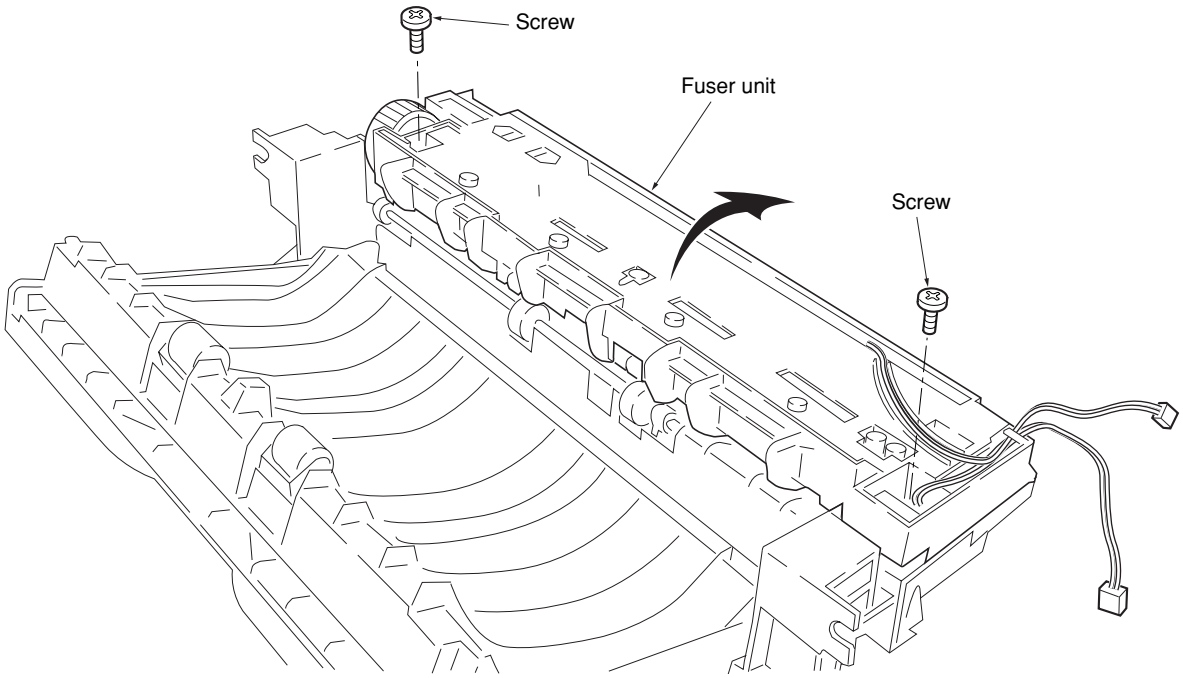

Figure 1-6-22 Splitting the fuser unit

TONER
www.tonerplus.com.ua

(1) Removing the separation claws

WARNING
The separation claws are extremely hot immediately after the copier was running. Allow substantial period of time until it cools down.

1. Remove and split the fuser unit (see page 1-6-18).
2. Loosen the stopper screws.
3. Hold the separation claw upright, and remove the separation claw and separation claw springs.

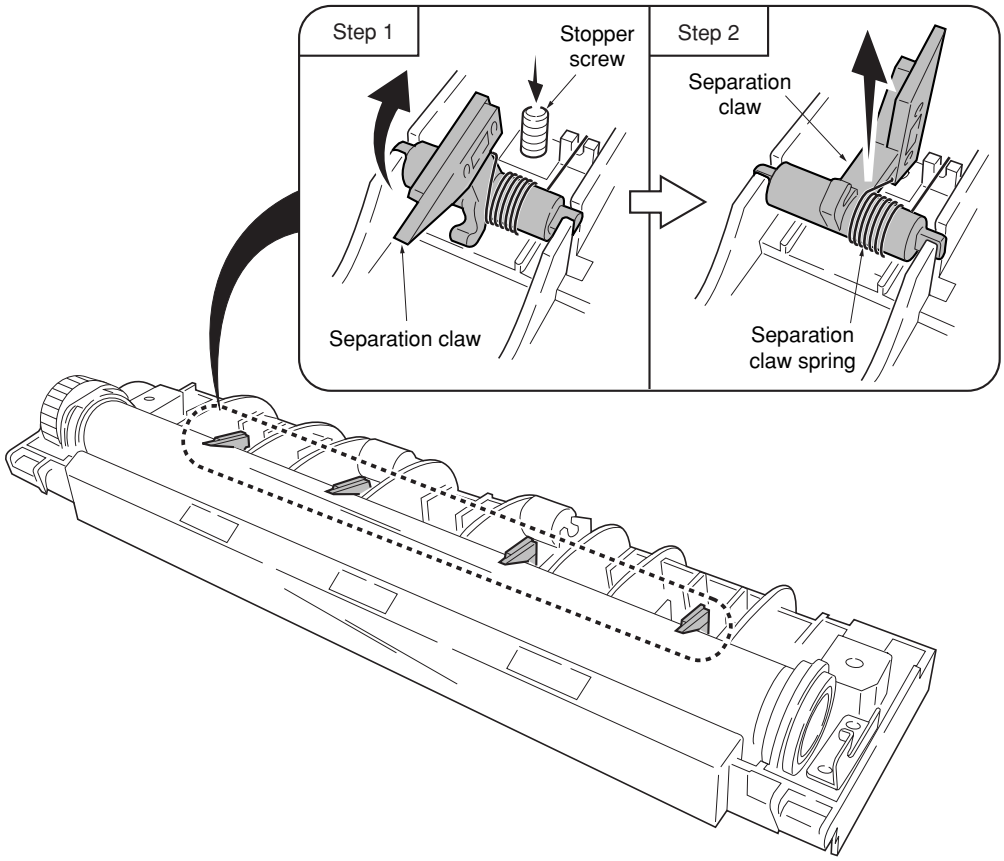

Figure 1-6-23 Removing the separation claws

TONER
www.tonerplus.com.ua

(2) Removing the heater lamp

WARNING
- The heater lamp is extremely hot immediately after the machine was running.
- Allow substantial period of time until it cools down. Also, the heater lamp is fragile: Handle it with great care.

CAUTION
- The heater lamps are fragile. Use extreme care when handling not to drop or break.
- Do not directly touch on the heater lamp. Finger prints on the heater lamp's outer surface can prevent proper fusing of toner on paper.
- When refitting the heater lamp, direct the short distance side from the projection in the middle of the lamp facing the machine's left side.

1. Remove and split the fuser unit (see page 1-6-18).
2. Remove all (four) separation claws (see page 1-6-20).
3. Remove the screw, release the tension of the lamp A holder.
4. Remove the heater lamp form the lamp B holder.
5. Remove the heater lamp from the heat roller.

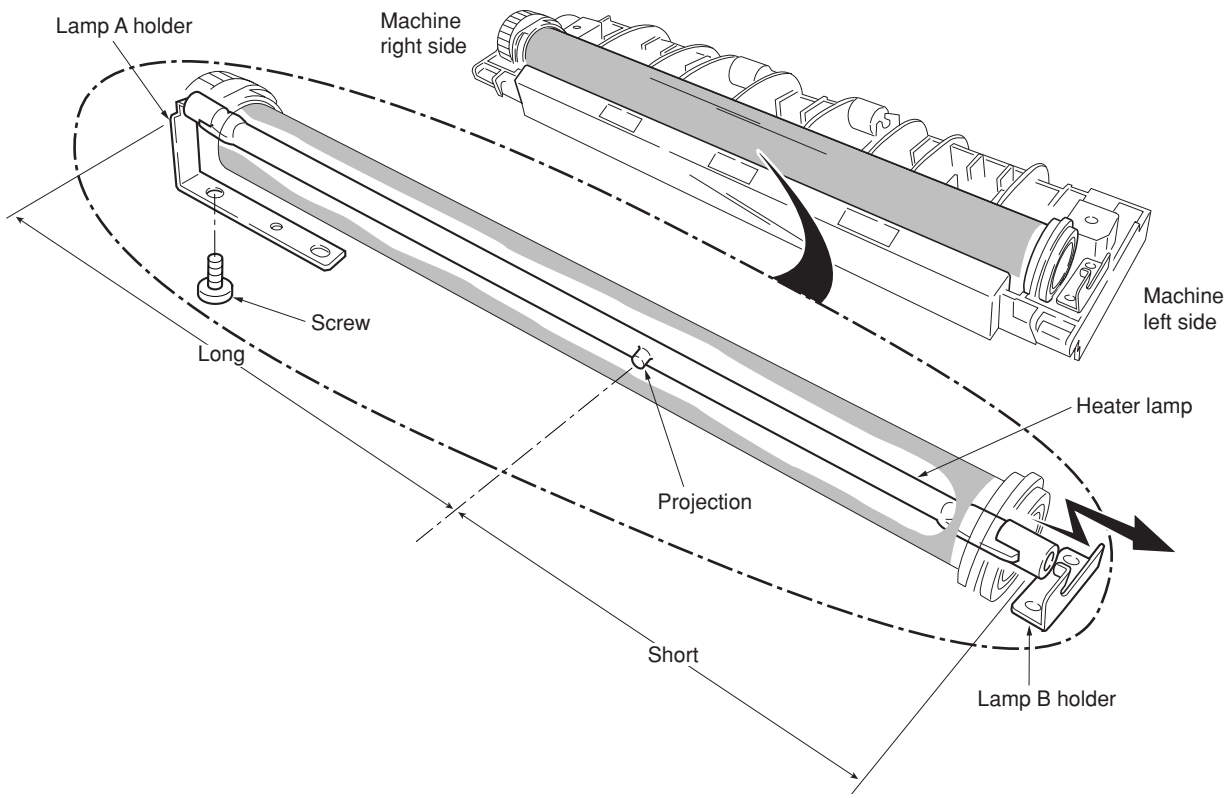

Figure 1-6-24 Removing the heater lamp

TONER
www.tonerplus.com.ua

(3) Removing the heat roller

WARNING

- The heat roller is extremely hot immediately after the machine was running. Allow substantial period of time until it cools down.

1. Remove and split the fuser unit (see page 1-6-18).
2. Remove the heater lamp (see page 1-6-22).
3. Press the lamp A holder away from the heat roller. Pull up both heat R bush and heat L bush at the same time.

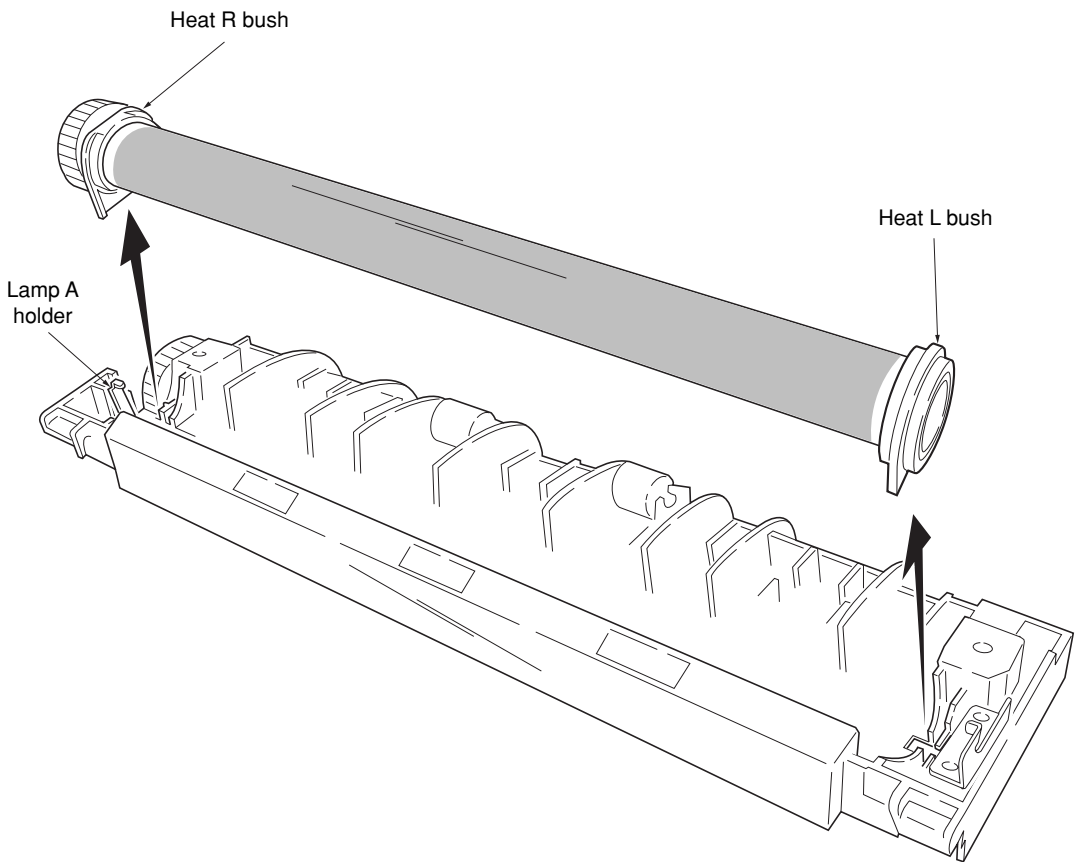

Figure 1-6-25 Removing the heat R bush and heat L bush

TONER
www.tonerplus.com.ua

4. Remove the heat gear Z33, heat R bush, and heat L bush from the heat roller.

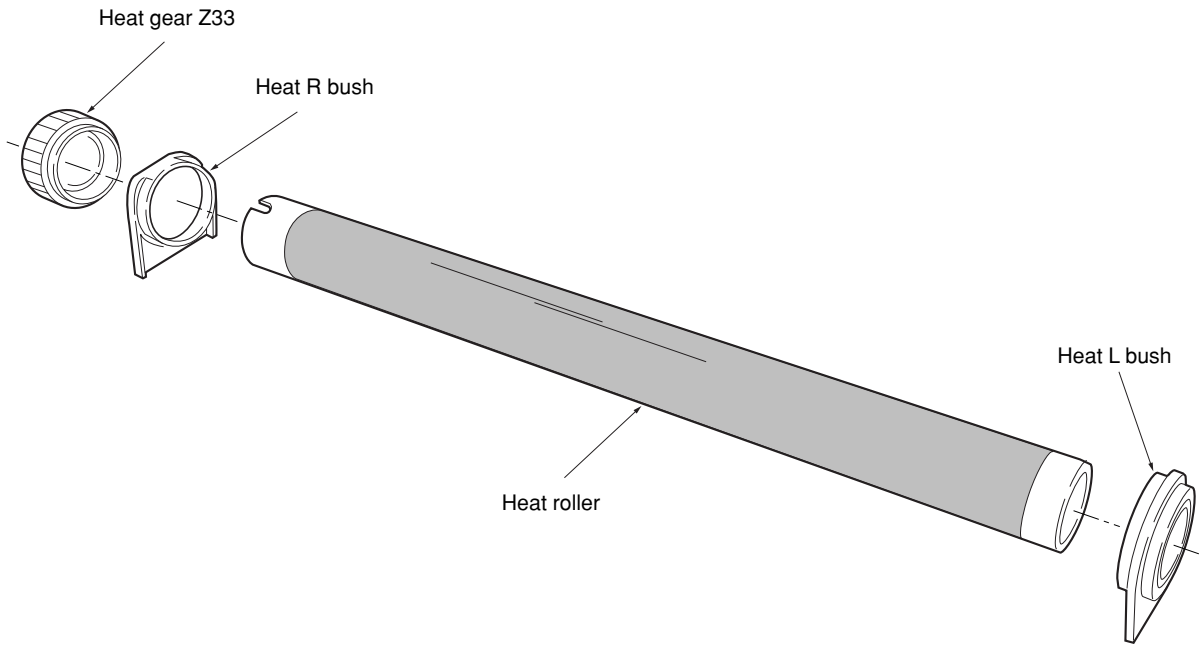

Figure 1-6-26 Removing the heat roller

TONER
www.tonerplus.com.ua

(4) Removing the thermistor

1. Remove and split the fuser unit (see page 1-6-18).
2. Remove the heater lamp (see page 1-6-21).
3. Remove the heat roller (see page 1-6-22).
4. Remove the screw.
5. Remove the thermistor.

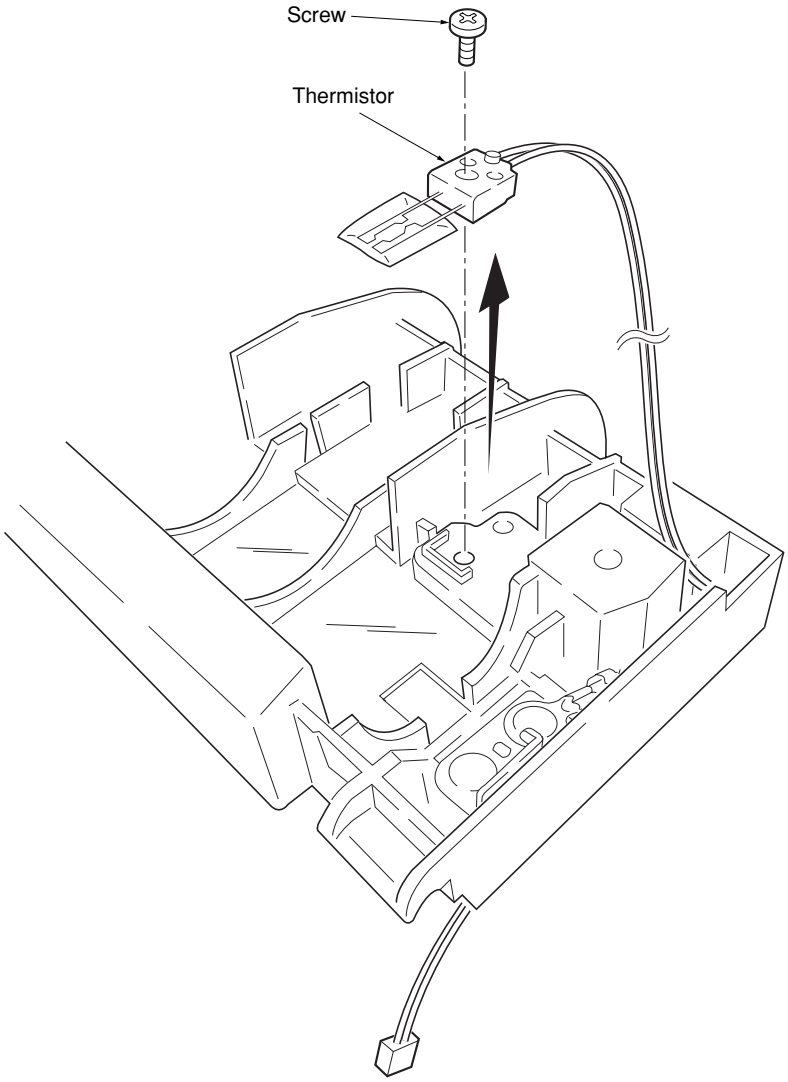

Figure 1-6-27 Removing the thermistor

TONER
www.tonerplus.com.ua

(5) Removing the thermal cutout

CAUTION
• Do not bend the terminals of the thermal cutout.

1. Remove and split the fuser unit (see page 1-6-18).
2. Remove the heater lamp (see page 1-6-21).
3. Remove the heat roller (see page 1-6-22).
4. Remove two screws.
5. Remove the thermal cutout.

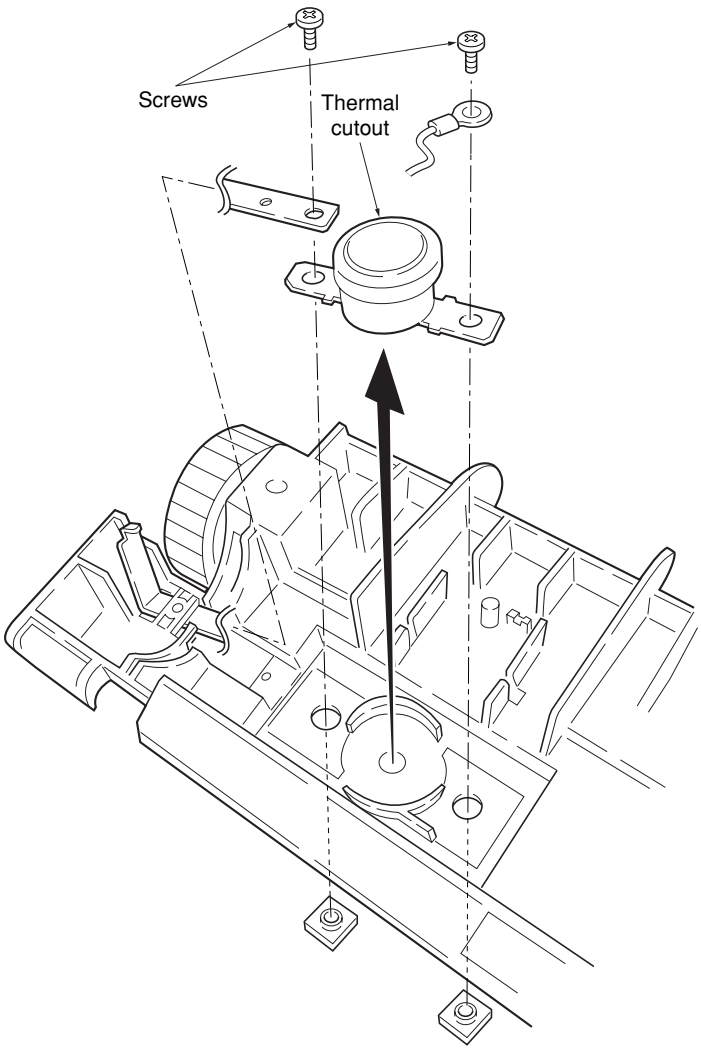

Figure 1-6-28 Removing the thermal cutout

TONER
www.tonerplus.com.ua

(6) Removing the press roller

WARNING

- The press roller is extremely hot immediately after the machine was running. Allow substantial period of time until it cools down.

1. Remove and split the fuser unit (see page 1-6-18).
2. Remove the press roller from the fuser unit.

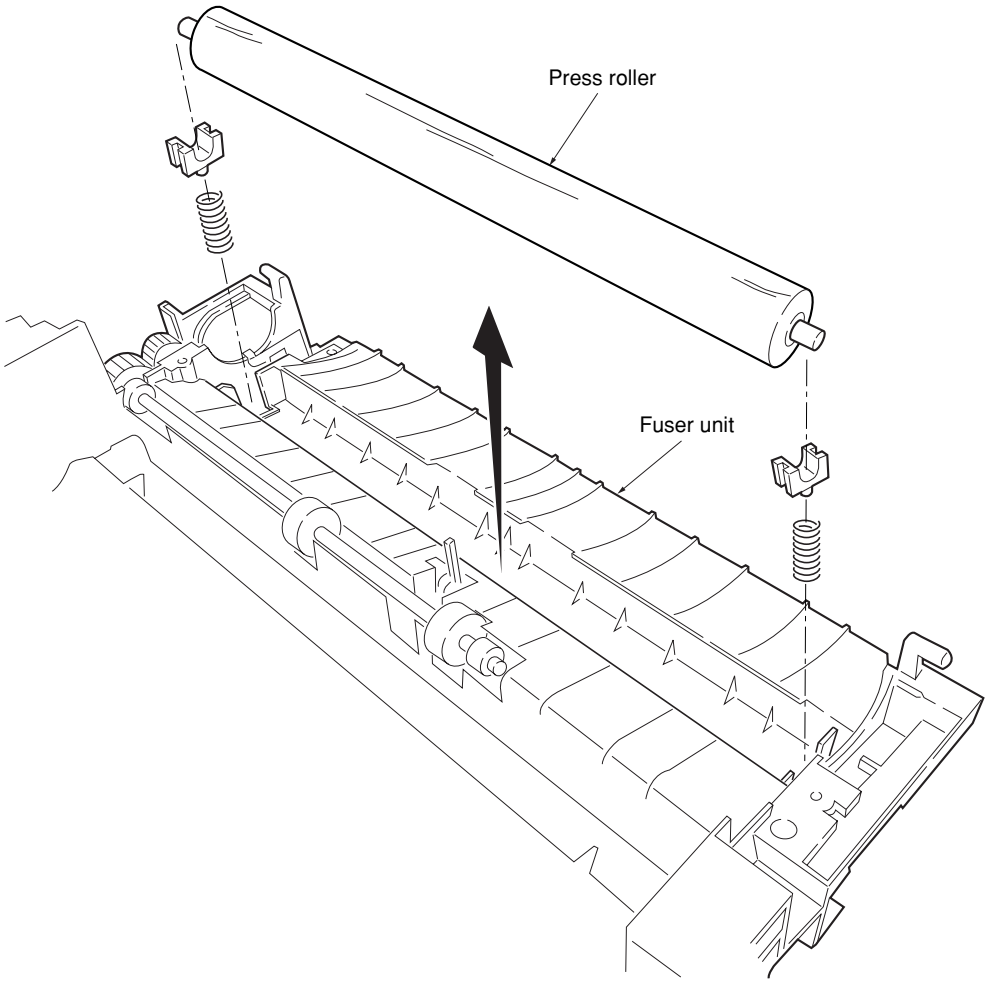

Figure 1-6-29 Removing the press roller

TONER
www.tonerplus.com.ua

1-6-10 Removing the scanner unit

1. Remove the right and left cover (see page 1-6-4).
2. Remove the speaker (see page 1-6-10).
3. Remove five connectors and two flexible flat cables from the scanner PWB.
4. Remove five screws and then remove the scanner PWB.

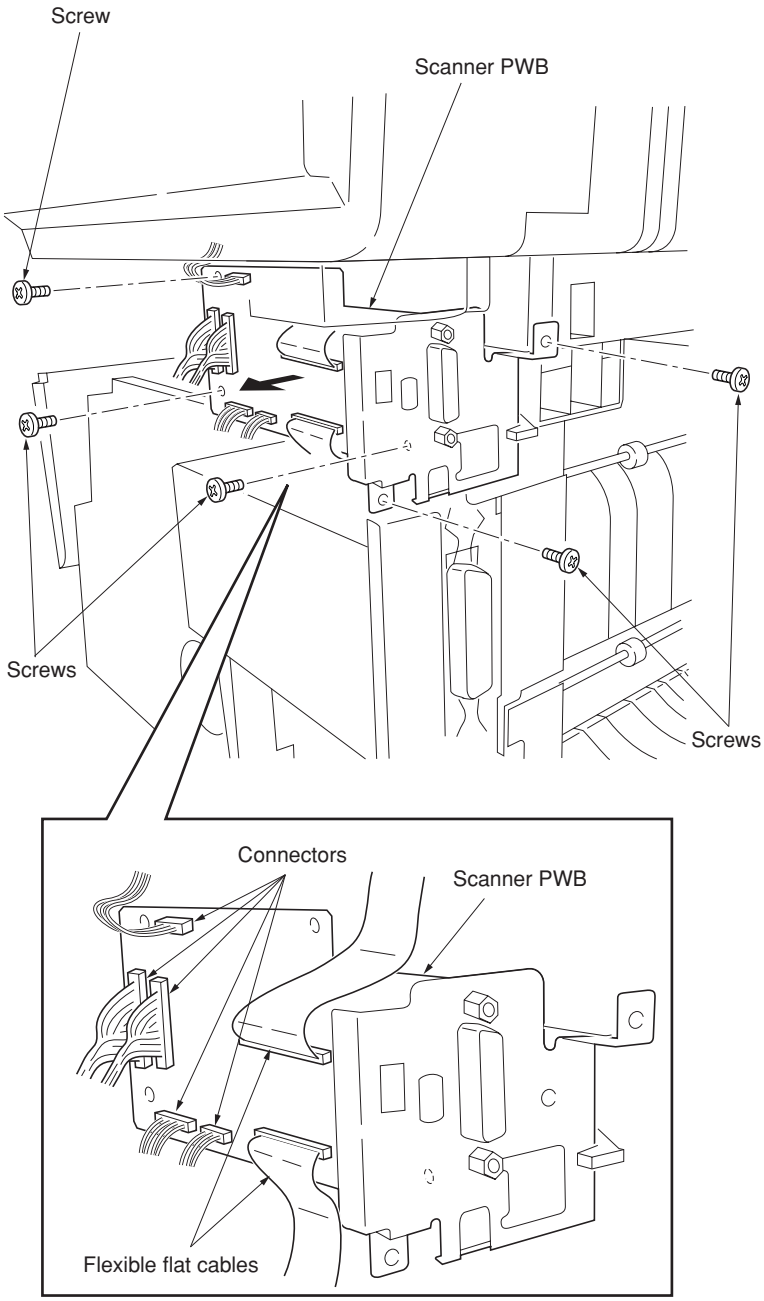

Figure 1-6-30 Removing the scanner PWB

TONER
www.tonerplus.com.ua

4. Remove two screws.
5. Slide the scanner unit and then remove the scanner unit.

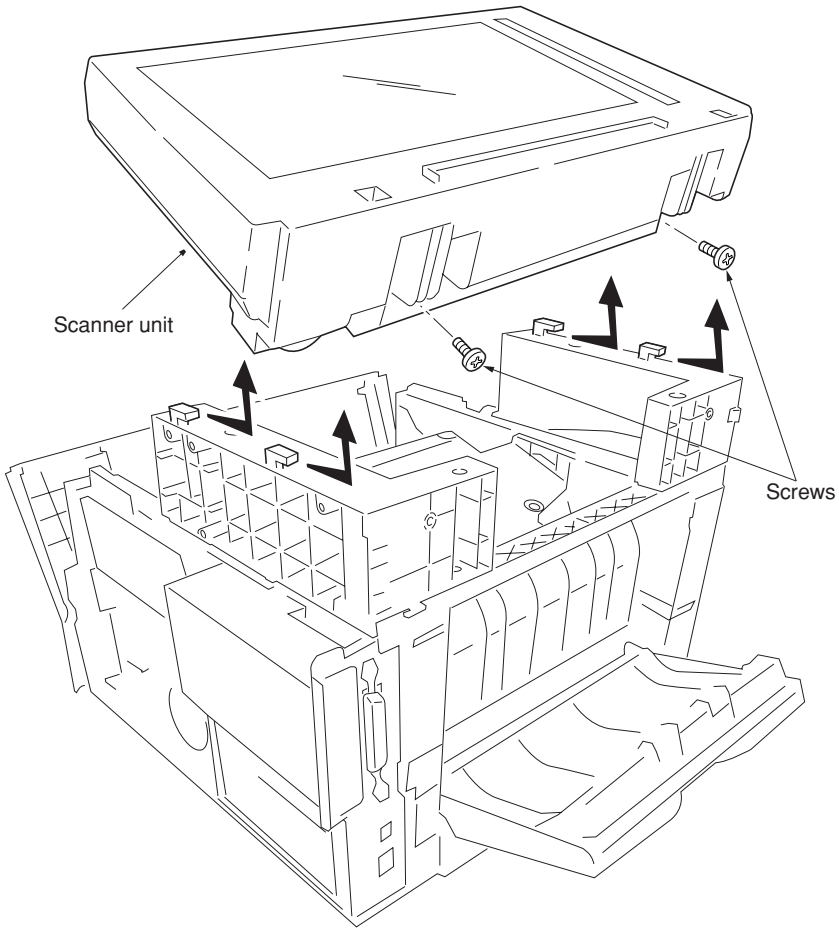

Figure 1-6-31 Removing the scanner unit

TONER
www.tonerplus.com.ua

1-6-11 Removing the laser scanner unit and the eraser lamp

1. Remove the scanner unit (see page 1-6-27).
2. Remove two screws and then remove grounding plate.
3. Remove each two screws and then remove the right and left scanner stays.

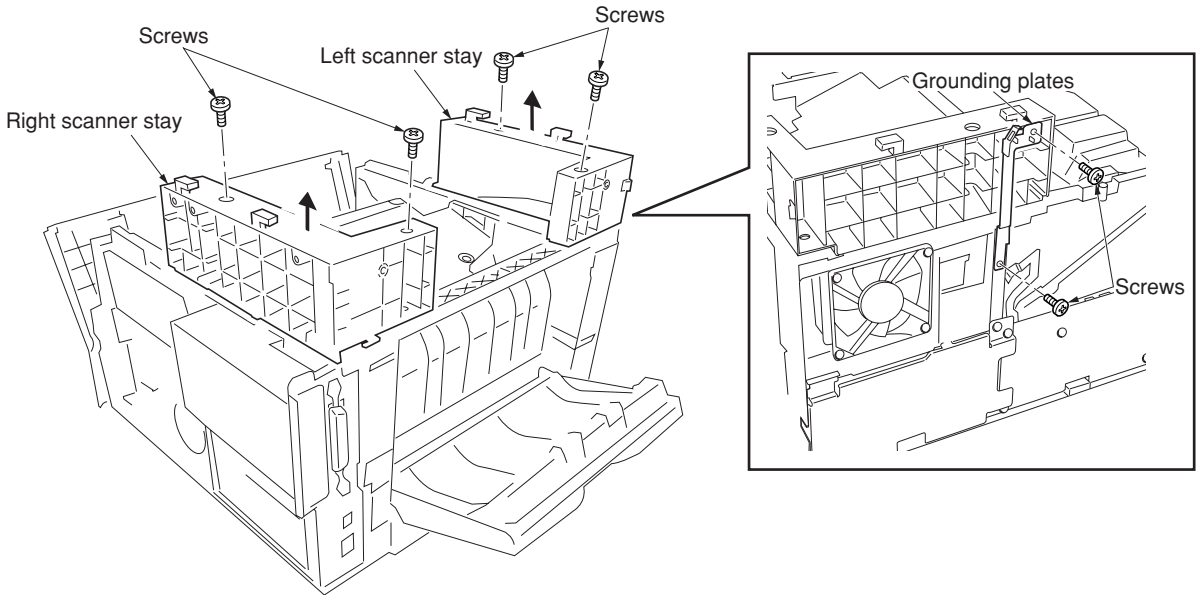

Figure 1-6-32 Removing the right and left stays

4. Remove four connectors.
5. Remove six screws and then remove the LSU shield.
   * When refitting the LSU shield, tighten a screw in order of ④ from ①.

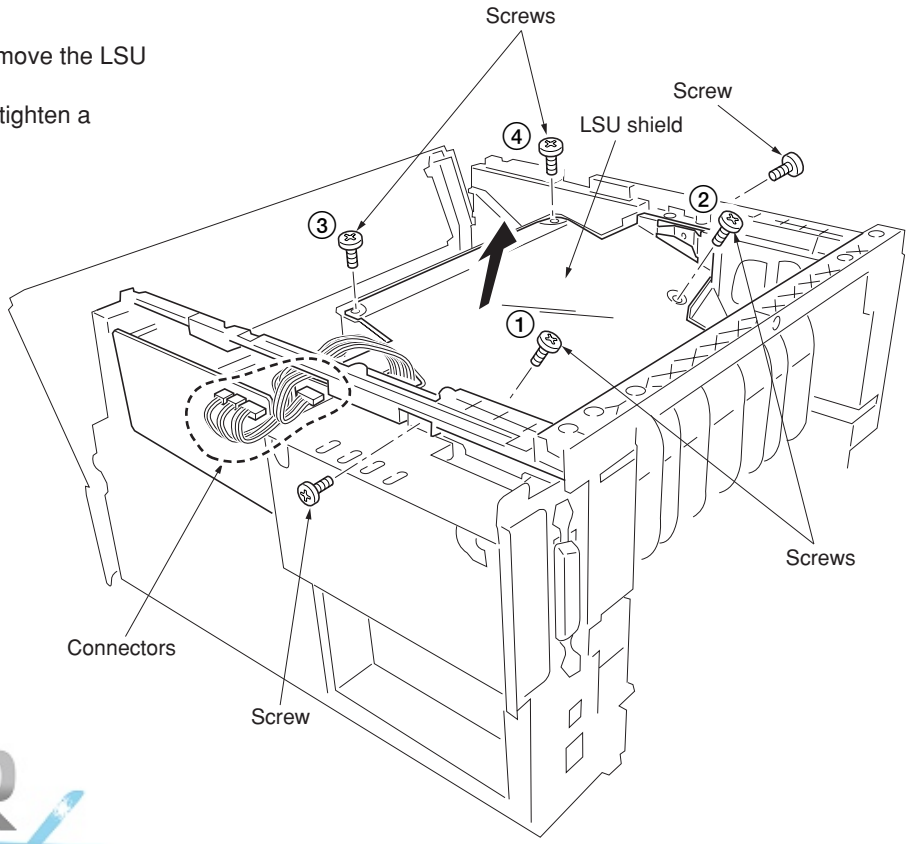

Figure 1-6-33 Removing the LSU shield

TONER
www.tonerplus.com.ua

6. Remove three screws.
7. Remove two connectors from the laser scanner unit.
8. Remove the laser scanner unit.
   * When refitting the laser scanner unit, tighten a screw in order of ③ from ①.

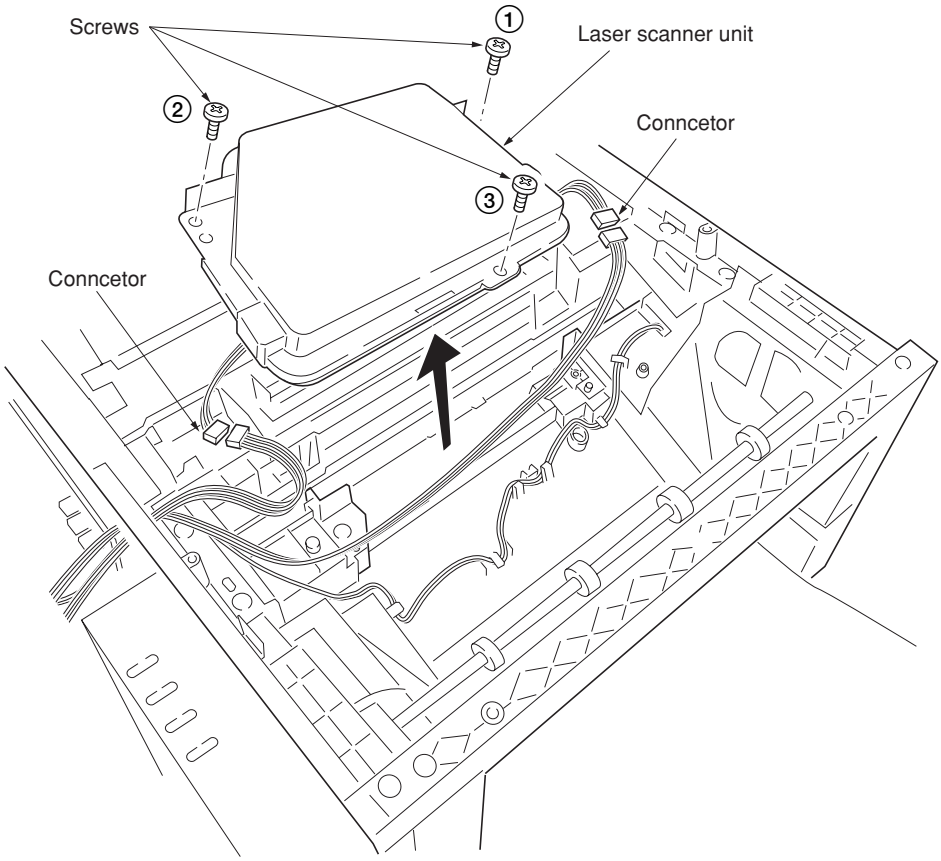

Figure 1-6-34 Removing the laser scanner unit

TONER
www.tonerplus.com.ua

9. Remove the eraser lamp.

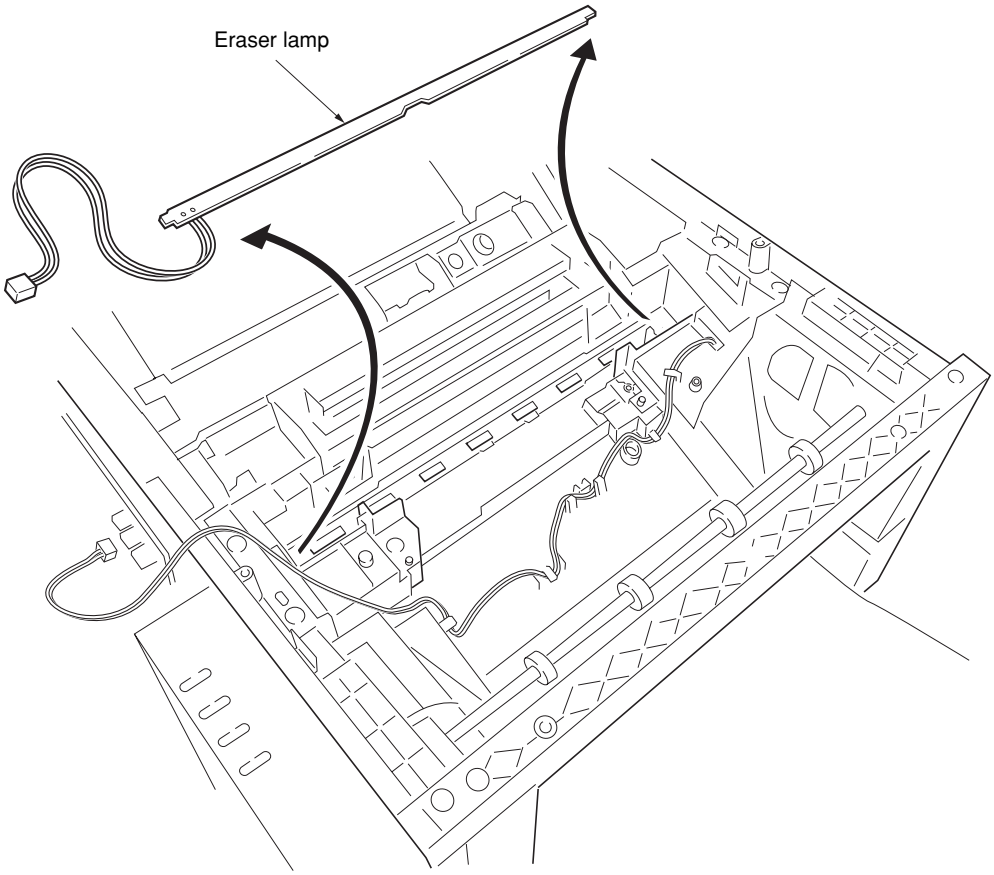

Figure 1-6-35 Removing the eraser lamp

TONER
www.tonerplus.com.ua

1-6-12 Removing the ISU unit

1. Unhook two hooks by using screw driver through the holes and then remove the operation unit.

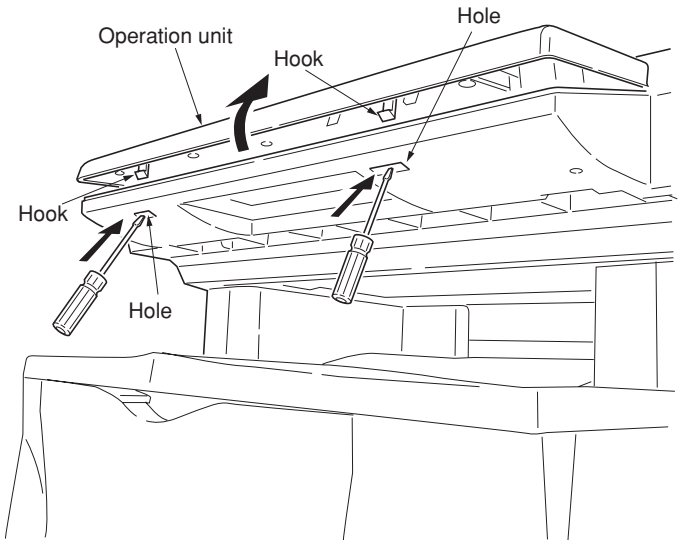

Figure 1-6-36 Removing the operation unit

2. Remove two screws and then remove the original holder cover.

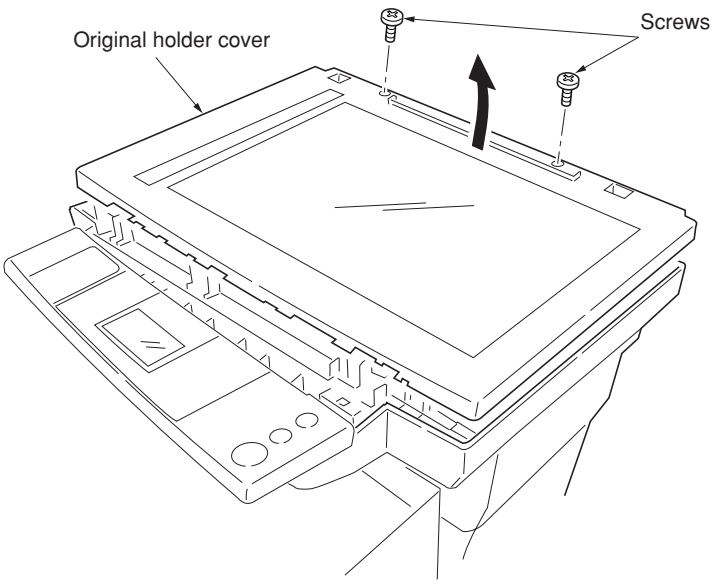

Figure 1-6-37 Removing the original holder cover

TONER
www.tonerplus.com.ua

3. Remove two screws and then remove two grounding plates.
4. Remove the stopper ring and then detach the scanner shaft.
   * Detach the shaft taking care to tilt it as little as possible.

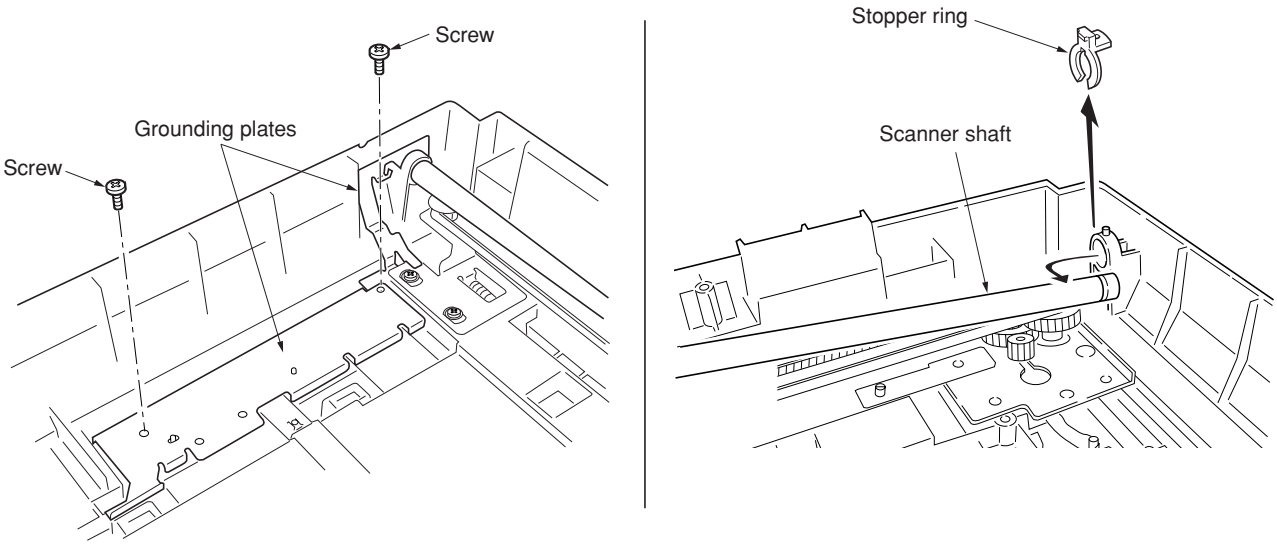

Figure 1-6-38 Detaching the scanner shaft

5. Remove the flexible flat cable from the ISU PWB's connector.
6. Remove the scanner belt from the belt hook of scanner unit.
7. Remove the ISU unit from the scanner shaft.
   * Remove the ISU unit taking care not to lose the M4 nut located in the ISU unit.

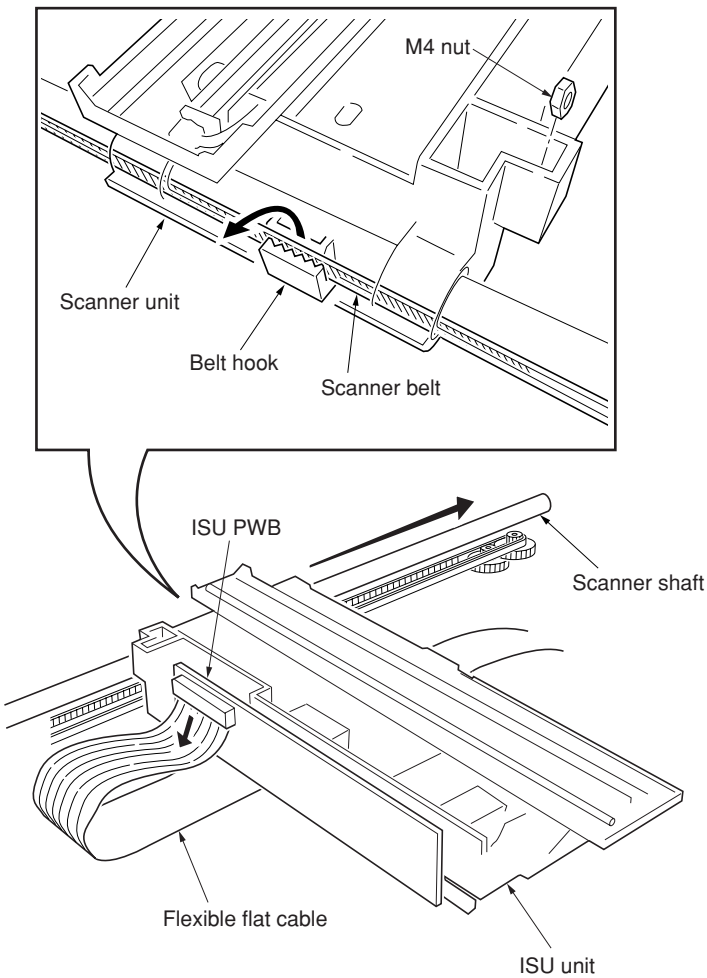

Figure 1-6-39 Removing the ISU unit

TONER
www.tonerplus.com.ua

1-6-13 Removing the exposure lamp

1. Remove the ISU unit (see page 1-6-32).
2. Remove two connectors from the inverter PWB.
3. Remove the screw and then remove the inverter PWB.

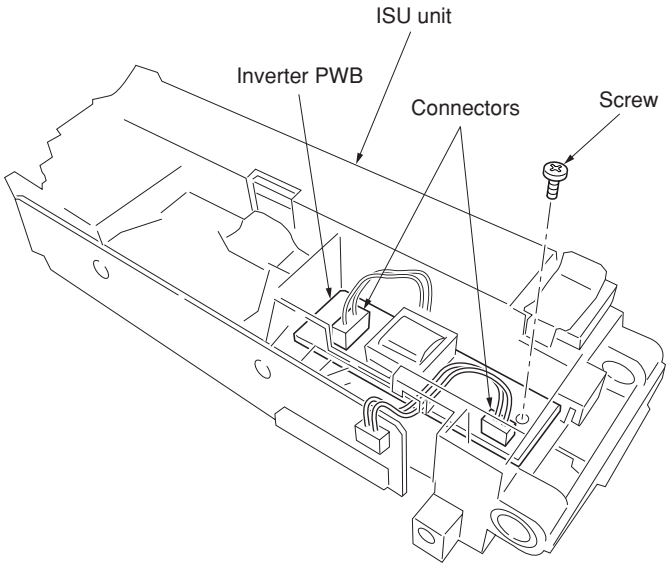

Figure 1-6-40 Removing the inverter PWB

4. While unhooking the hook and then slide the exposure lamp mount.

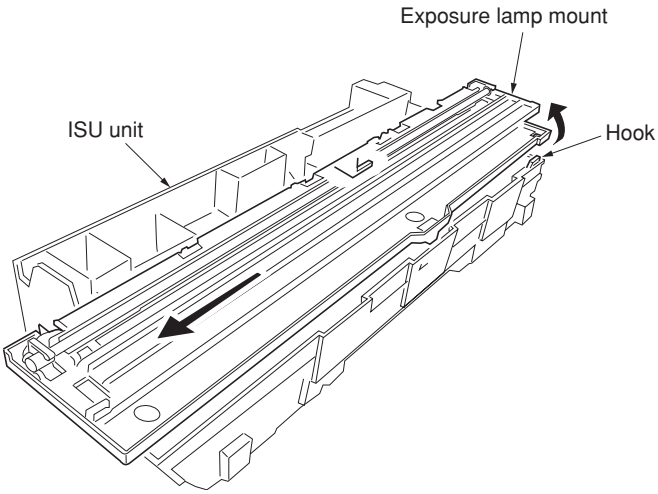

Figure 1-6-41 Removing the exposure lamp mount

TONER
www.tonerplus.com.ua

5. Remove the exposure lamp and cables from the exposure lamp mount.
   - Do not touch the glass surfaces of the exposure lamp with bare hands.

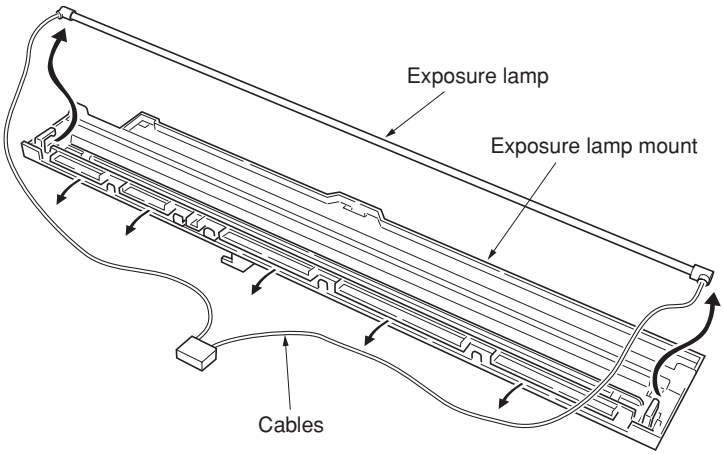

Figure 1-6-42 Removing the exposure lamp

TONER
www.tonerplus.com.ua

1-6-14 Removing the scanner mirror A

1. Remove the ISU unit (see page 1-6-32).
2. Remove the exposure lamp (see page 1-6-34).
3. Unhook two mirror A holders and then remove the scanner mirror A.

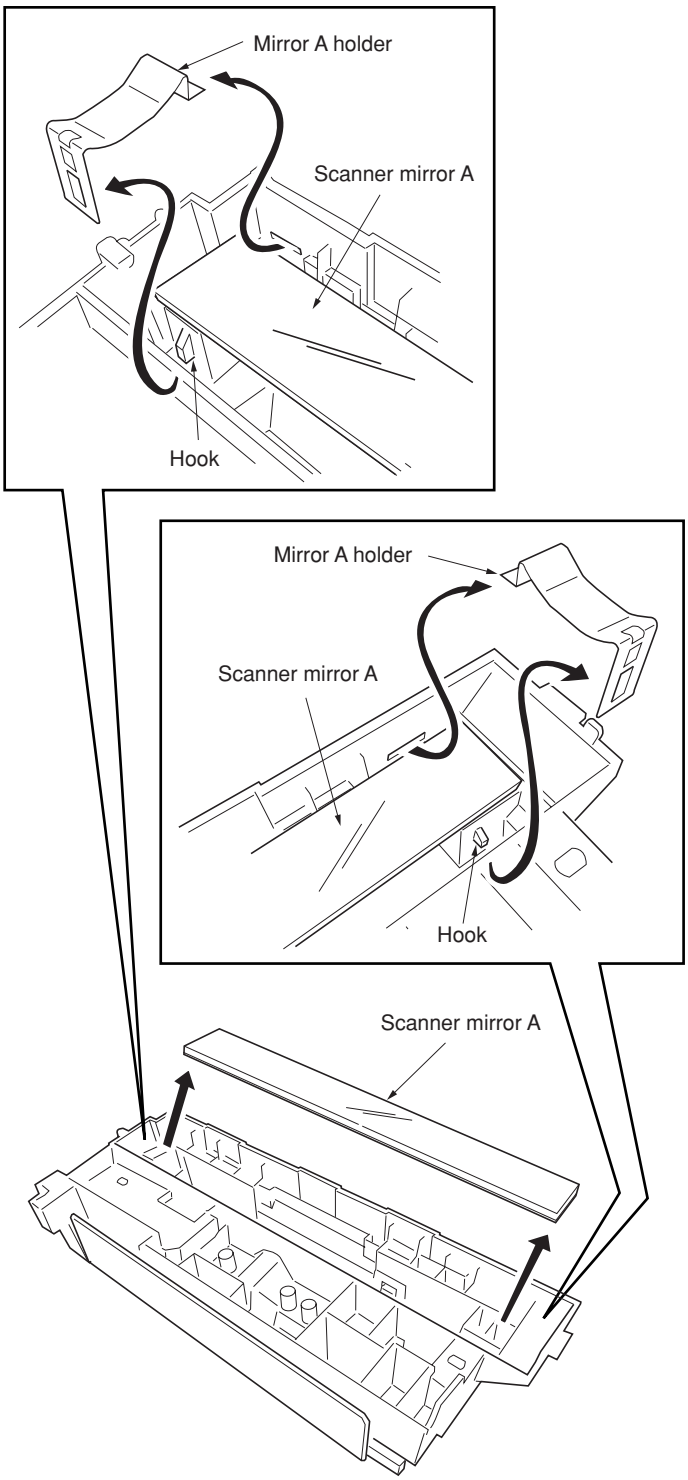

Figure 1-6-43 Removing the scanner mirror A

TONER
www.tonerplus.com.ua

1-6-15 Removing the scanner motor

1. Remove the original holder cover (see page 1-6-32).
2. Remove the right cover (see page 1-6-4).
3. Remove the speaker (see page 1-6-10).
4. Remove the connector from the scanner PWB.

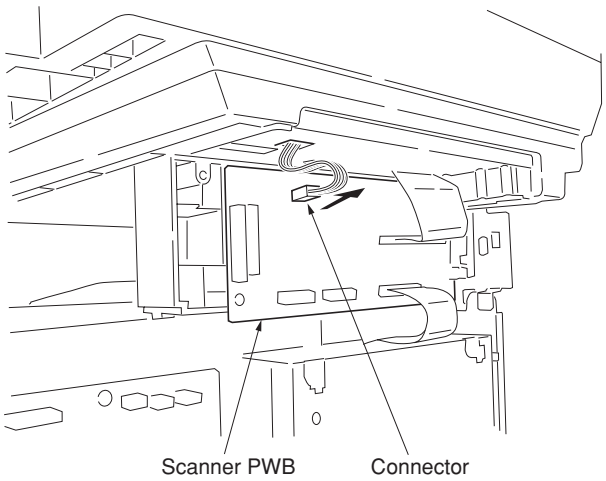

Figure 1-6-44 Removing the scanner motor (1)

5. Remove two screws and then remove two grounding plates.

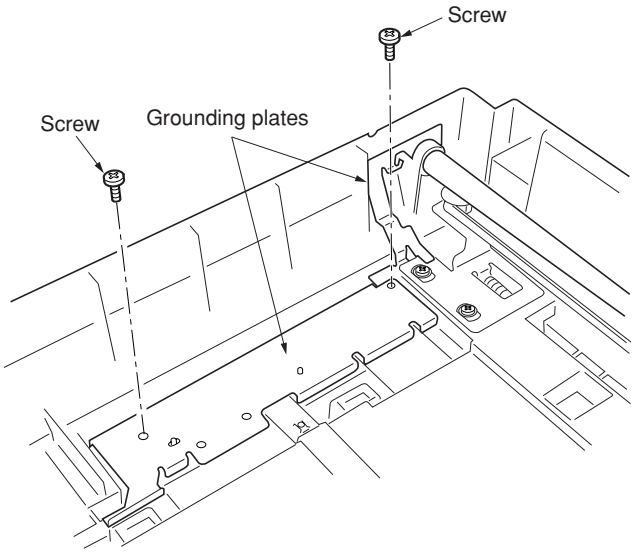

Figure 1-6-45 Removing the scanner motor (2)

6. Loosen two screws and then release the tension of a scanner belt.
7. Remove the scanner belt.

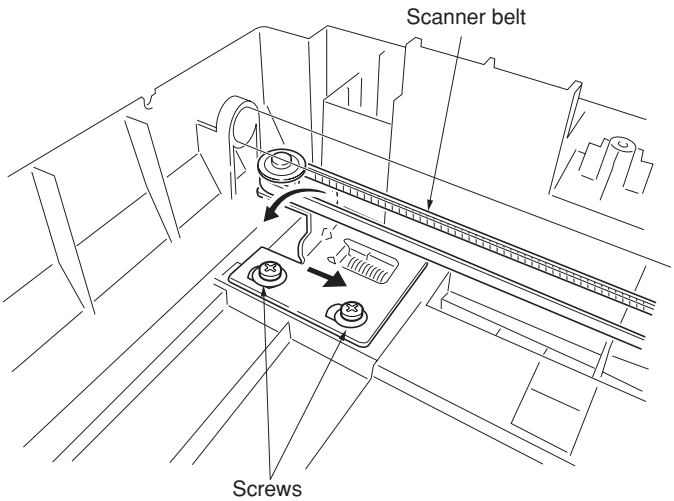

Figure 1-6-46 Removing the scanner motor (3)

TONER
www.tonerplus.com.ua

8. Remove three screws and then remove the grounding plate.

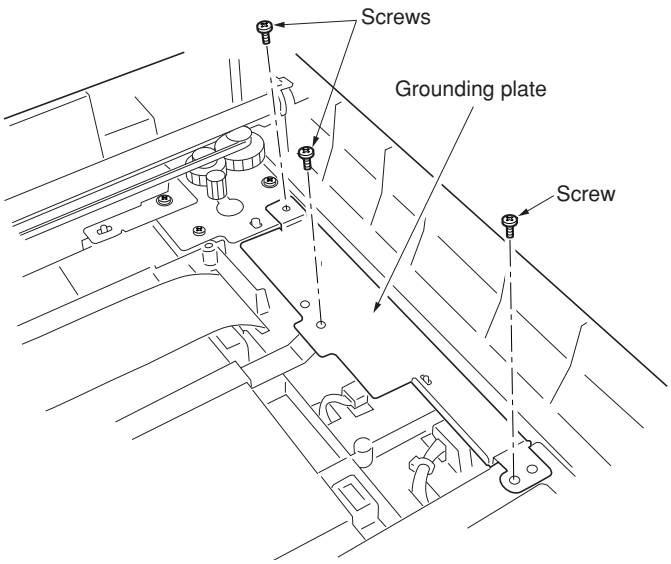

Figure 1-6-47 Removing the scanner motor (4)

9. Remove the stopper ring and then detach the scanner shaft.
   * Detach the shaft taking care to tilt it as little as possible.

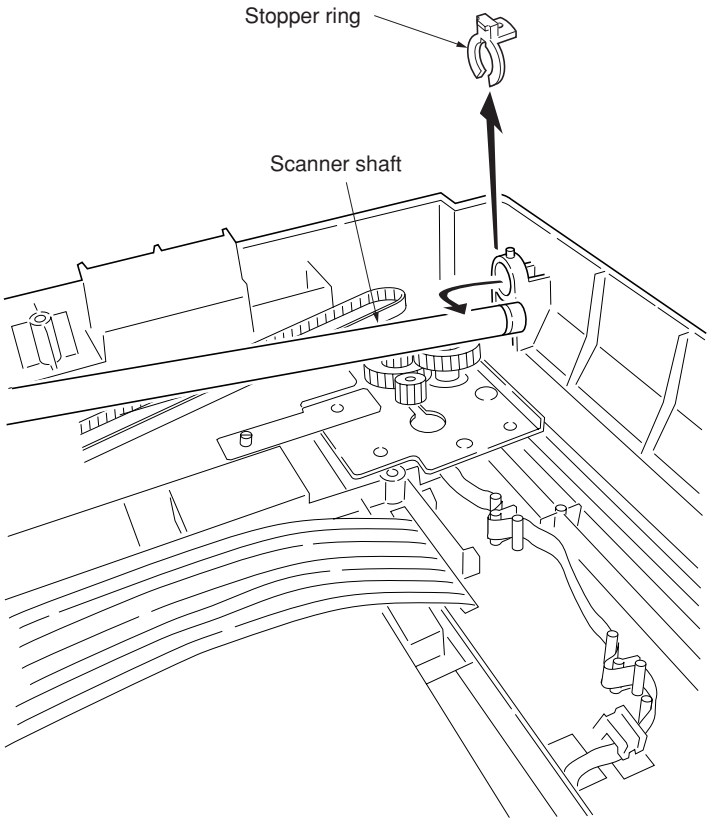

Figure 1-6-48 Removing the scanner motor (5)

TONER
www.tonerplus.com.ua

10. Remove the cable from the cable clamps.
11. Remove four screws and then remove the scanner motor mount with scanner motor.

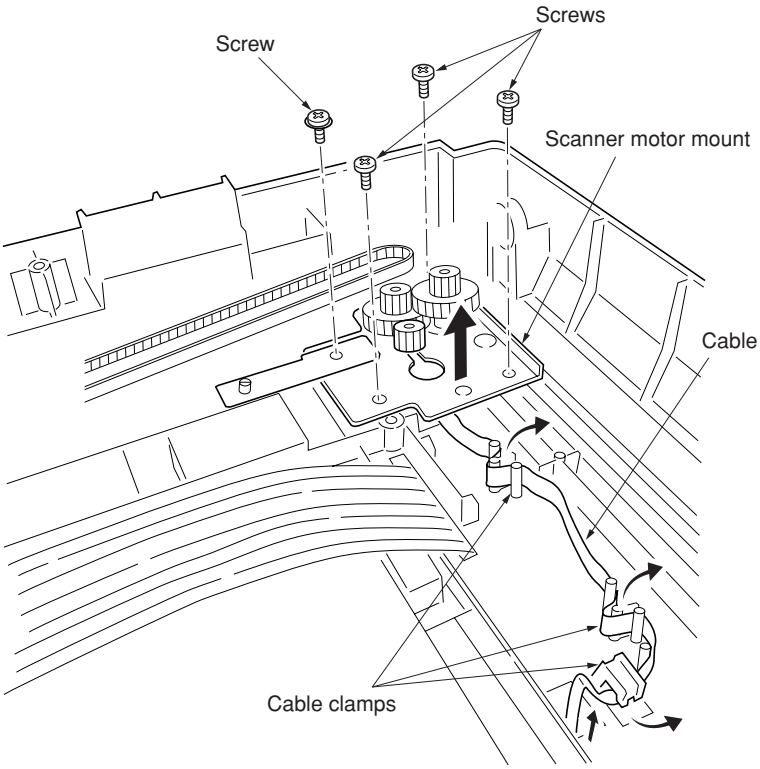

Figure 1-6-49 Removing the scanner motor (6)

12. Remove the screw and then remove the scanner motor.

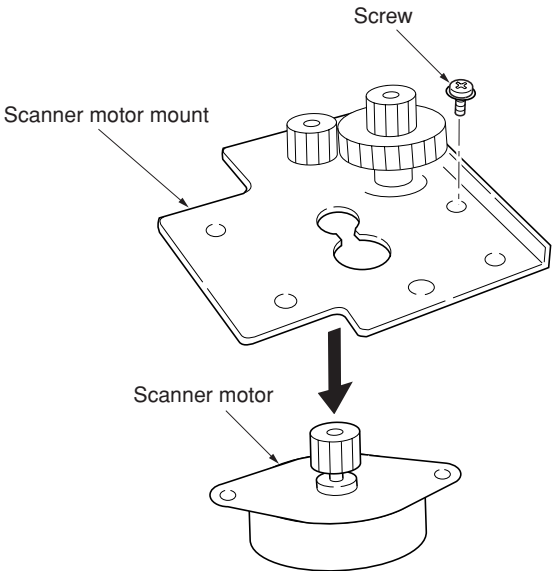

Figure 1-6-50 Removing the scanner motor (7)

TONER
www.tonerplus.com.ua

1-6-16 Removing the main charger unit

1. Remove the process unit from the machine (see page 1-6-2).
2. Unlatch three snaps, and remove the main charger cap.
3. Draw the main charger unit in the direction of arrow Ⓐ, then pull it out in the direction of arrow Ⓑ.

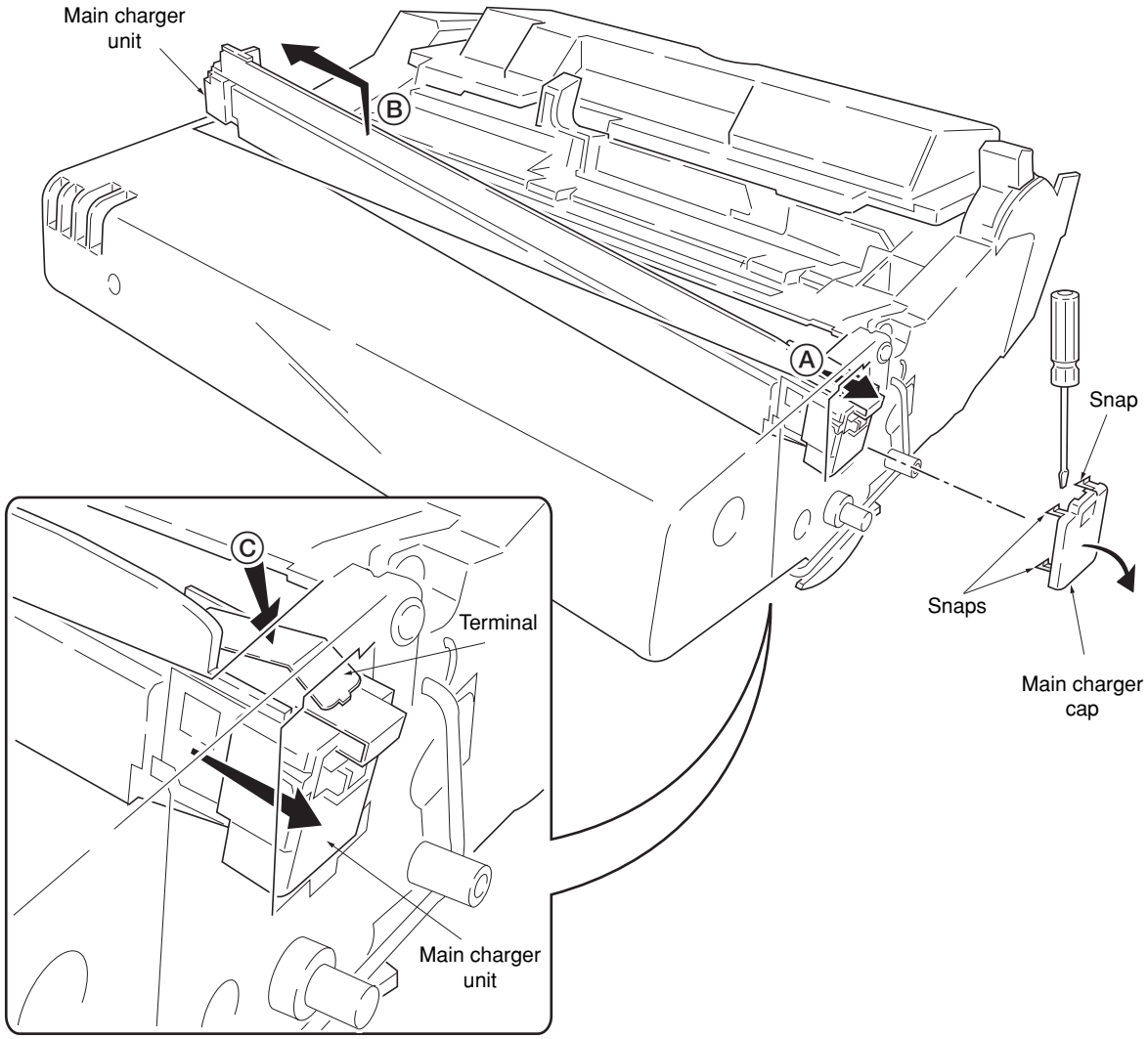

Figure 1-6-51 Removing the main charger unit

CAUTION

• When refitting the main charger unit, hold terminal down Ⓒ, then push frontwards. Use care not to deform the terminal.

TONER
www.tonerplus.com.ua

1-6-17 Adjustment the maintenance mode

(1) Adjusting the leading edge registration of image printing

Make the following adjustment if there is a regular error between the leading edges of the copy image and original.

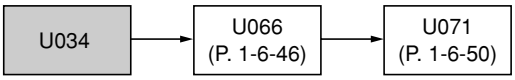

Caution:

Check the copy image after the adjustment. If the image is still incorrect, perform the above adjustments in maintenance mode.

Procedure

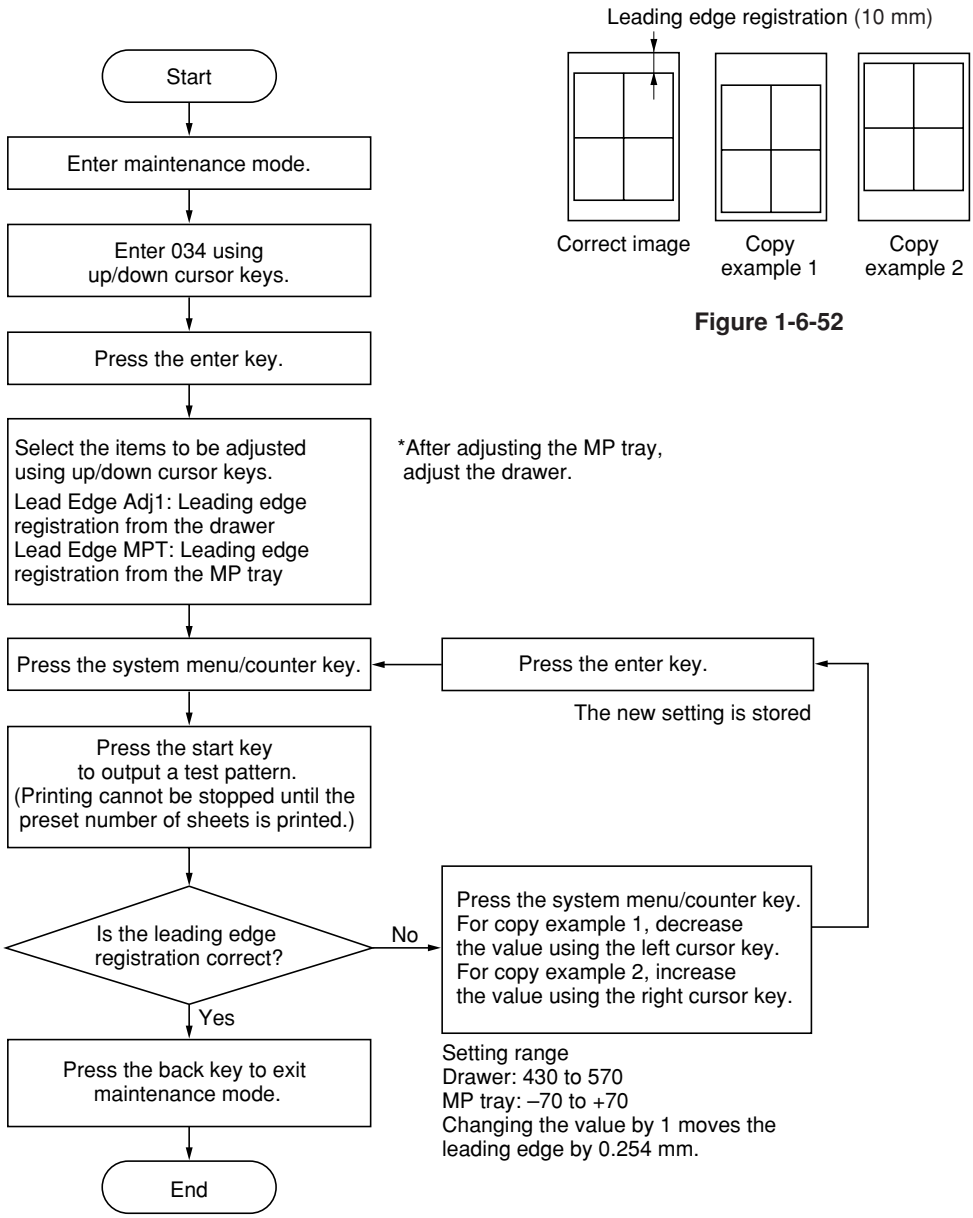

Figure 1-6-52

TONER
www.tonerplus.com.ua

(2) Adjusting the center line of image printing

Make the following adjustment if there is a regular error between the center lines of the copy image and original when paper is fed from the cassette.

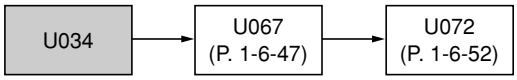

Caution:

Check the copy image after the adjustment. If the image is still incorrect, perform the above adjustments in maintenance mode.

Procedure

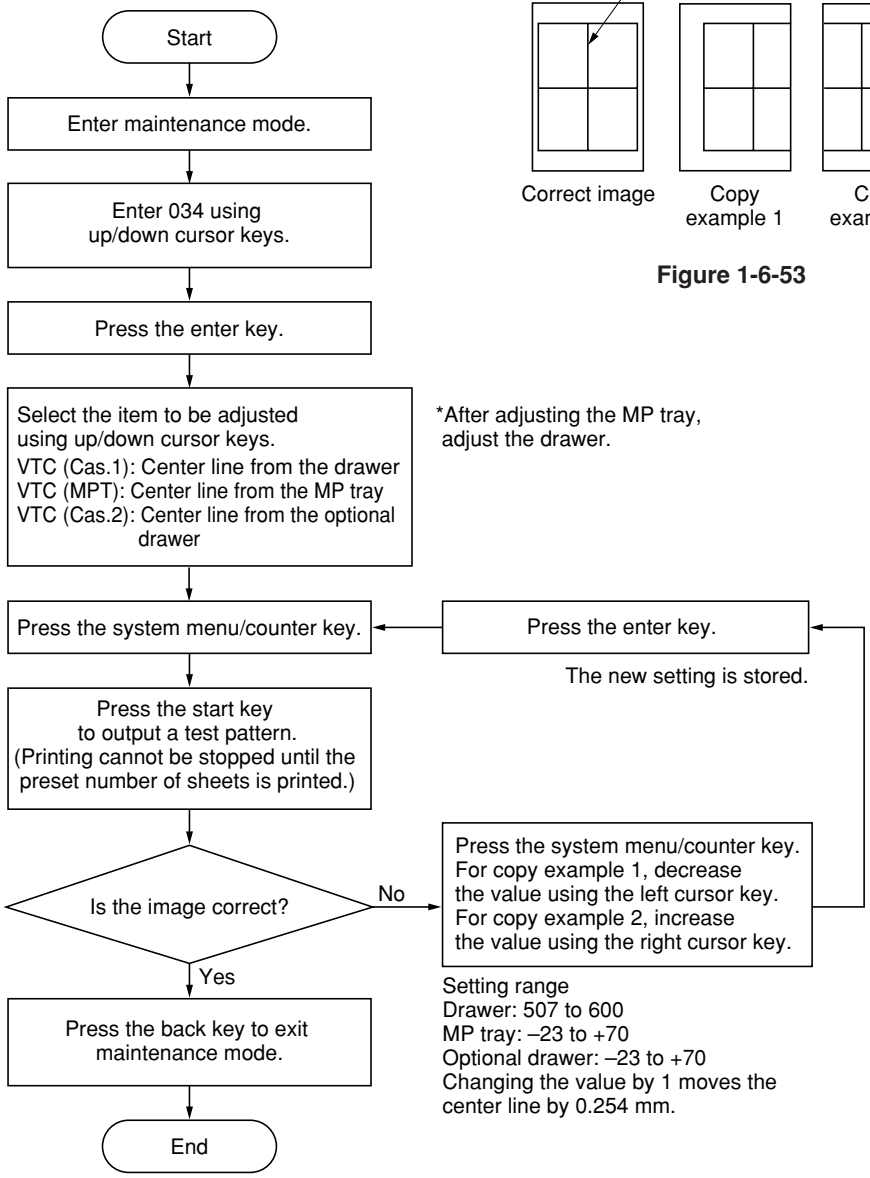

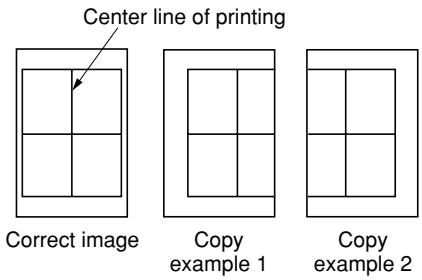

Figure 1-6-53

TONER
www.tonerplus.com.ua

(3) Adjusting the amount of slack in the paper

Make the following adjustment if the leading edge of the copy image is missing or varies randomly, or if the copy paper is Z-folded.

Procedure

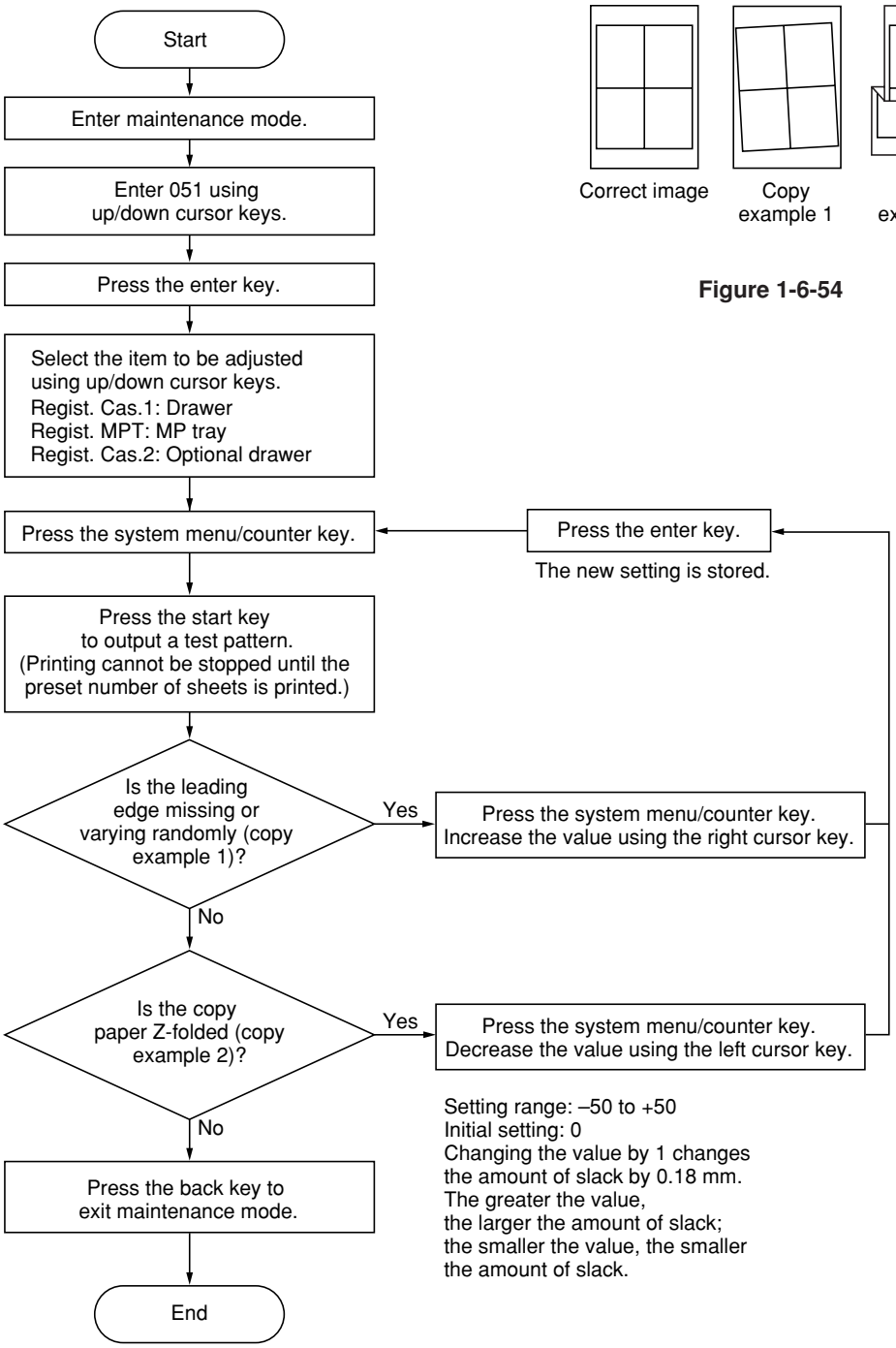

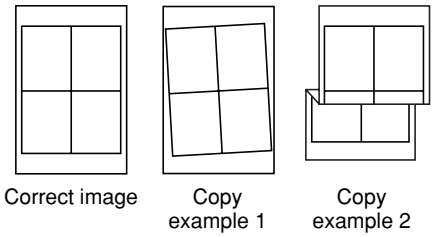

Figure 1-6-54

TONER
www.tonerplus.com.ua

(4) Adjusting magnification of the scanner in the main scanning direction

Perform the following adjustment if the magnification in the main scanning direction is not correct.

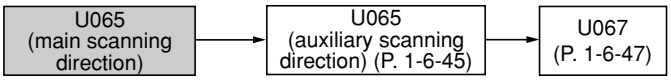

Caution:

Before making the following adjustment, ensure that the above adjustments have been made in maintenance mode. Also, perform "(5) Adjusting magnification of the scanner in the auxiliary scanning direction" (page 1-6-45) and "(7) Adjusting the scanner center line" (page 1-6-47) after this adjustment.

Procedure

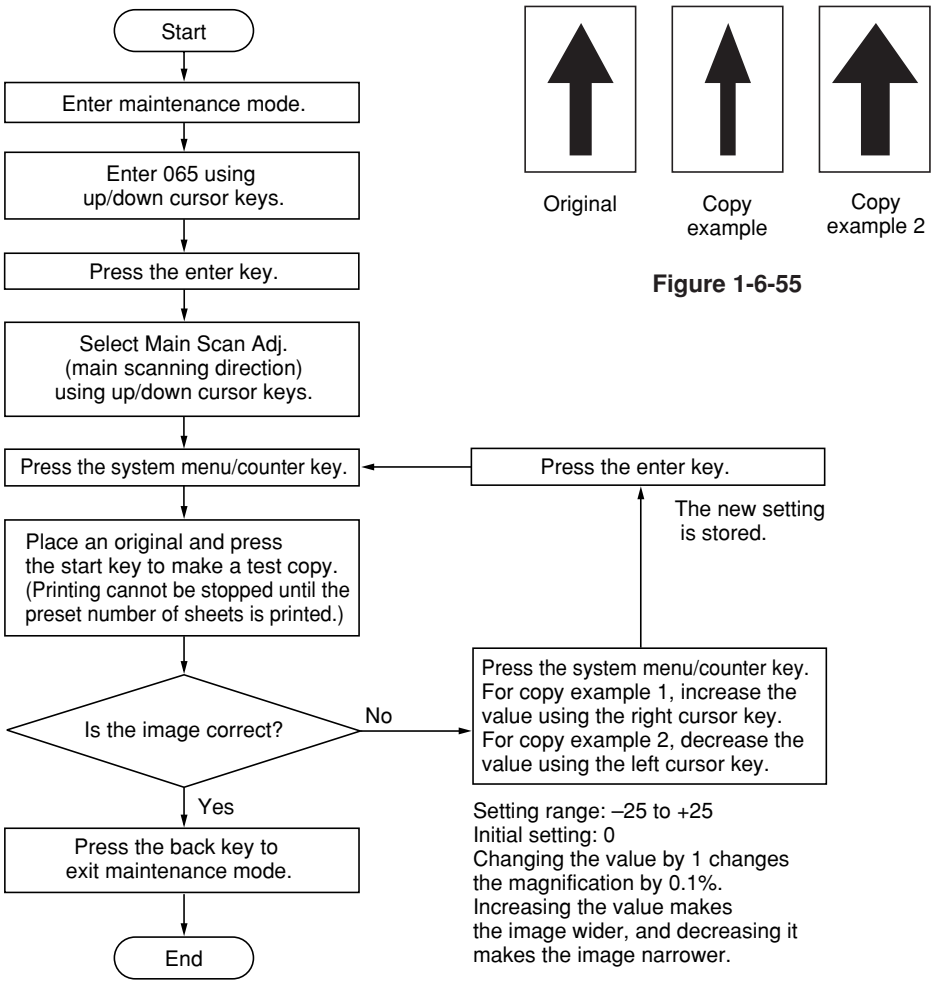

Figure 1-6-55

TONER
www.tonerplus.com.ua

(5) Adjusting magnification of the scanner in the auxiliary scanning direction

Perform the following adjustment if the magnification in the auxiliary scanning direction is not correct.

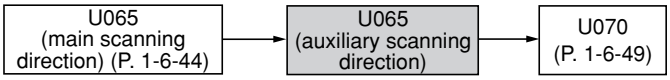

Caution:

Before making the following adjustment, ensure that the above adjustments have been made in maintenance mode.

Procedure

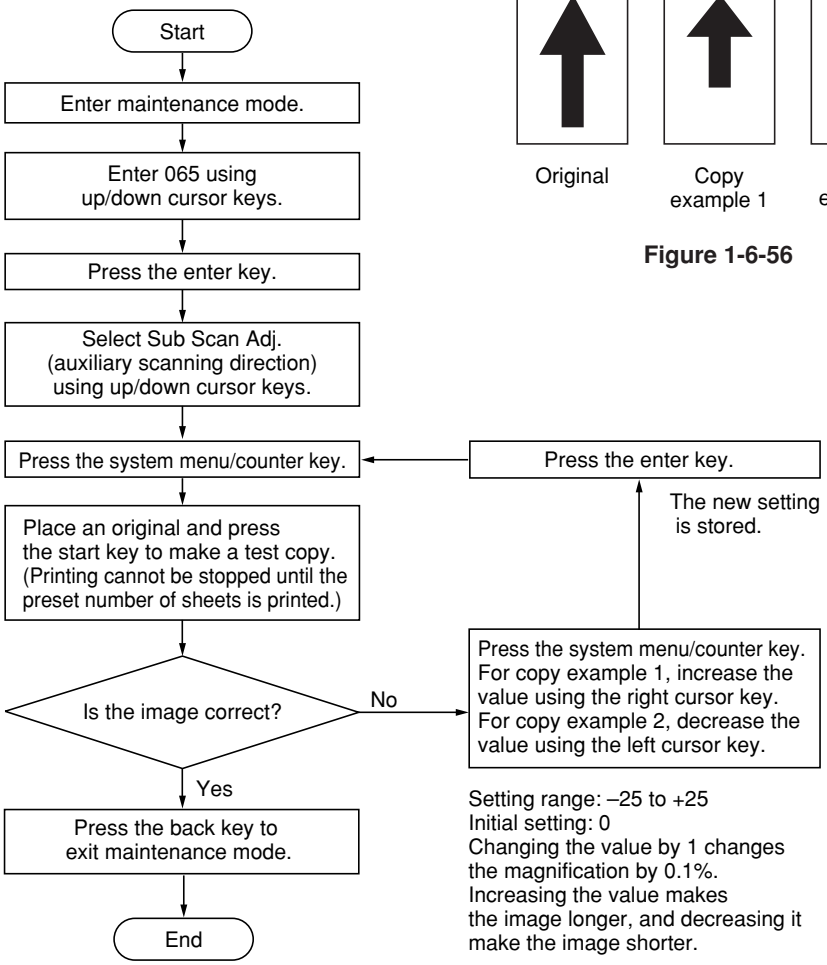

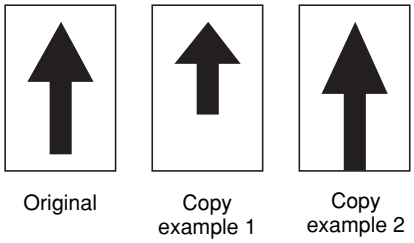

Figure 1-6-56

TONER
www.tonerplus.com.ua

(6) Adjusting the scanner leading edge registration

Perform the following adjustment if there is regular error between the leading edges of the copy image and original.

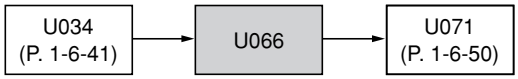

Caution:

Before making the following adjustment, ensure that the above adjustments have been made in maintenance mode.

Procedure

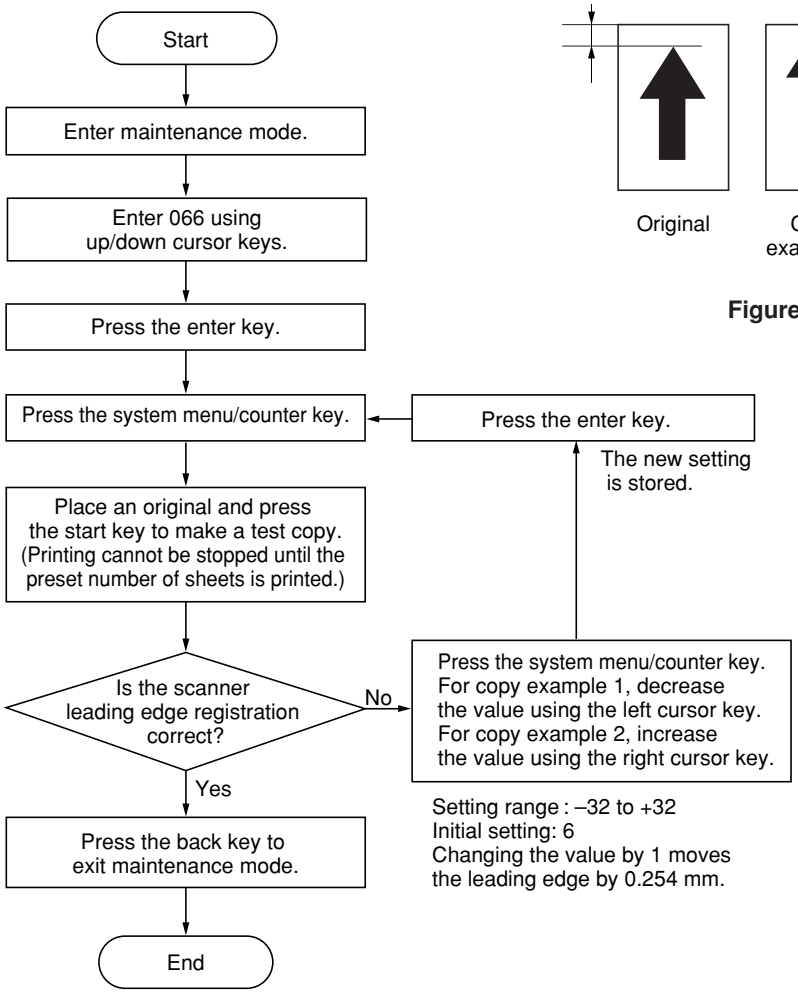

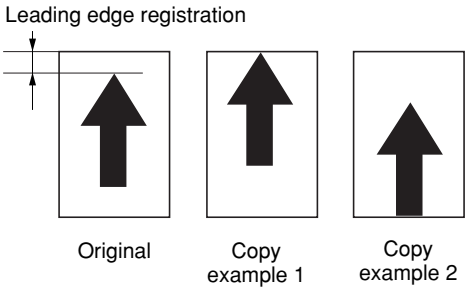

Figure 1-6-57

TONER
www.tonerplus.com.ua

(7) Adjusting the scanner center line

Perform the following adjustment if there is a regular error between the center lines of the copy image and original.

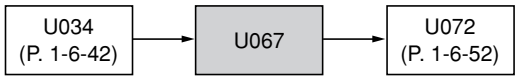

Caution:

Before making the following adjustment, ensure that the above adjustments have been made in maintenance mode.

Procedure

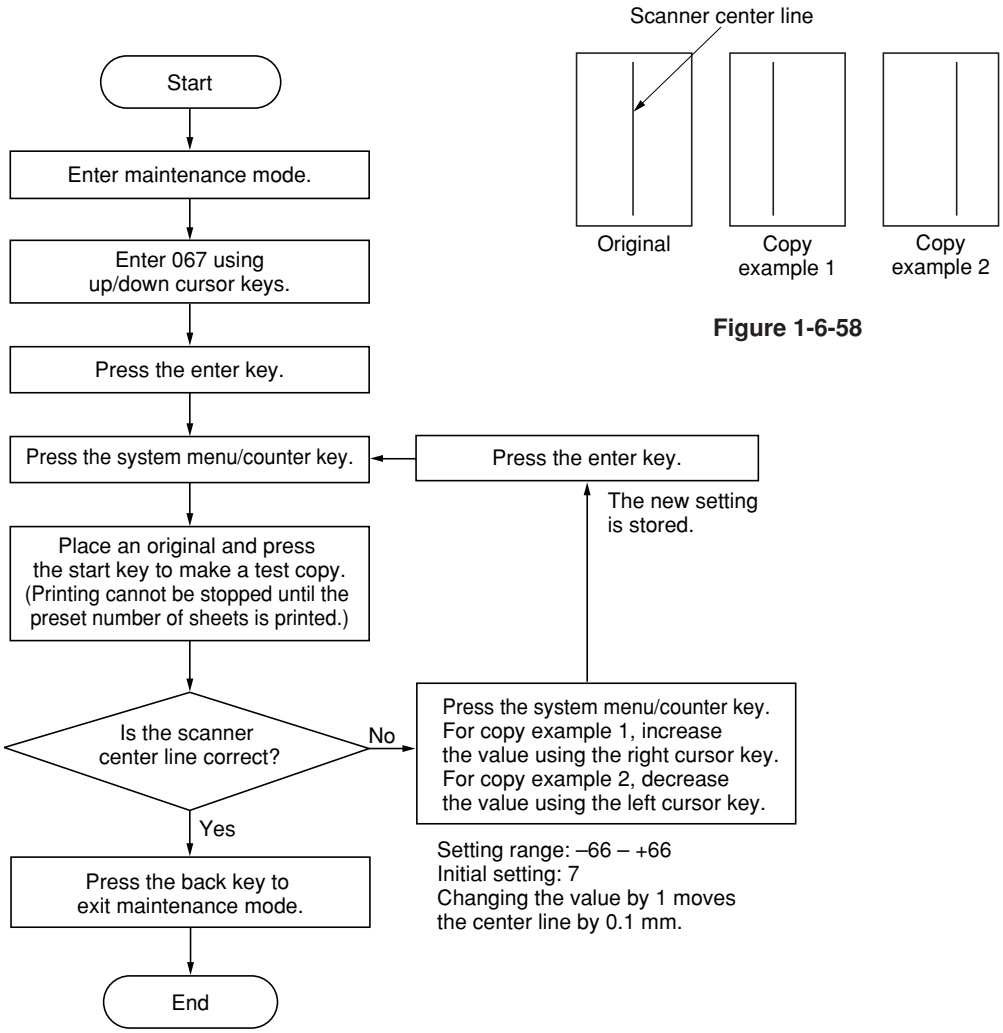

Figure 1-6-58

TONER
www.tonerplus.com.ua

(8) Adjusting the margins for scanning an original on the contact glass

Perform the following adjustment if the margins are not correct.

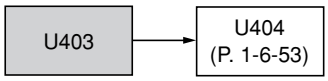

Caution:

Check the copy image after the adjustment. If the image is still incorrect, perform the above adjustments in maintenance mode.

Procedure

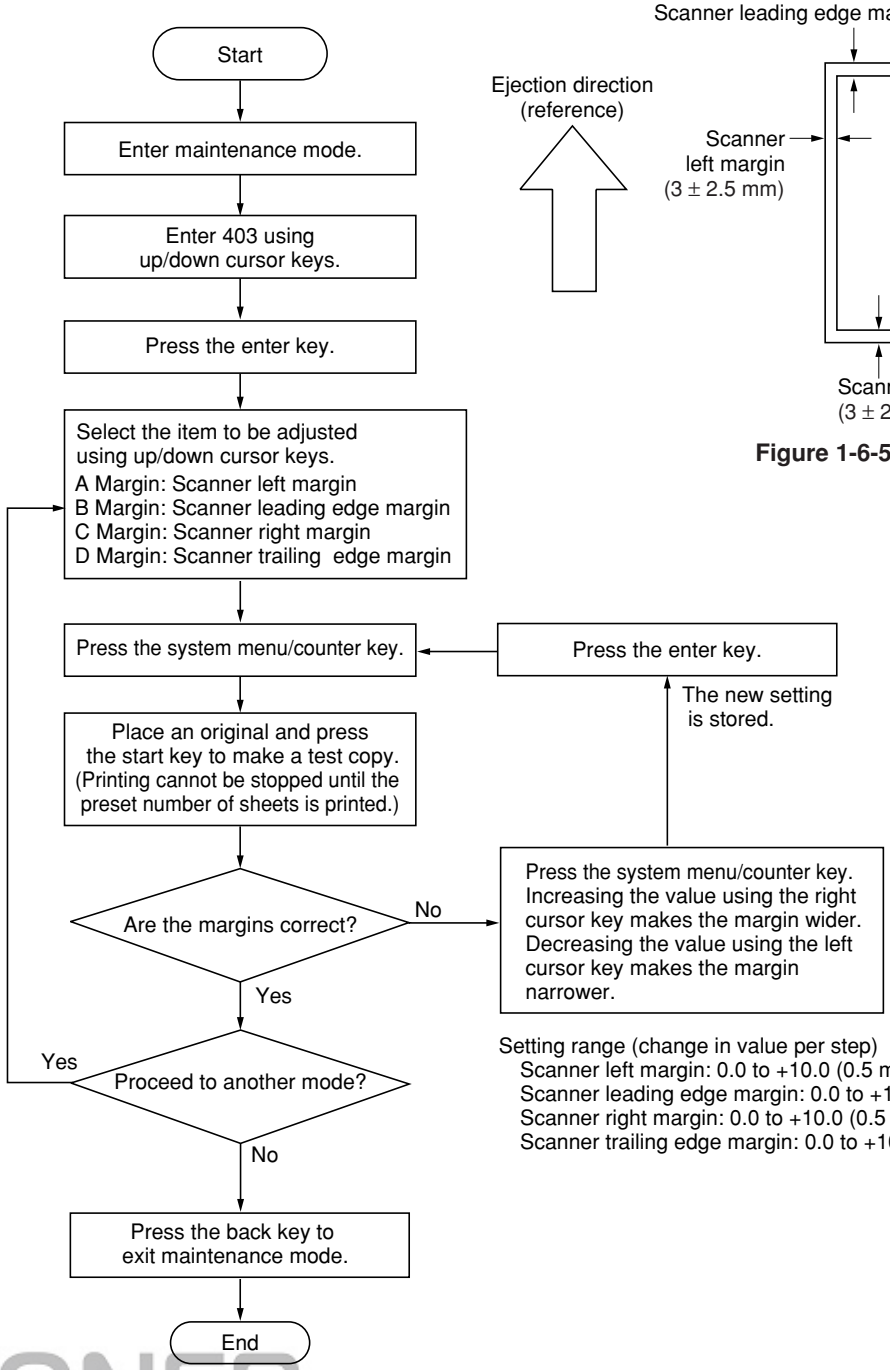

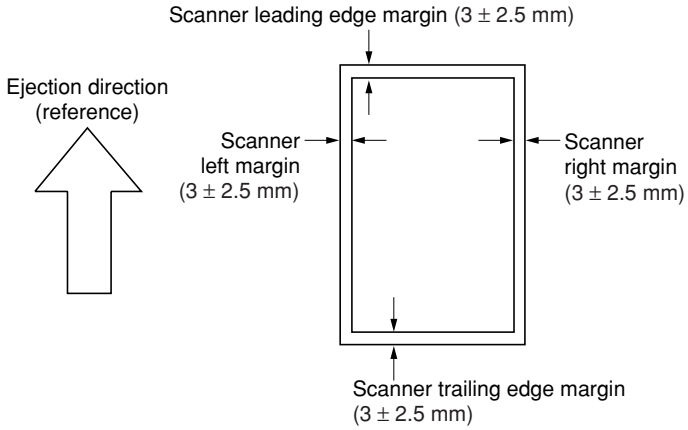

Figure 1-6-59

TONER
www.tonerplus.com.ua

(9) Adjusting the DP magnification

Adjust magnification in the auxiliary scanning direction if magnification is incorrect when the DP is used.

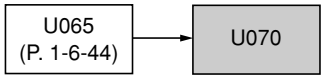

Caution:

Before making the following adjustment, ensure that the above adjustments have been made in maintenance mode.

Procedure

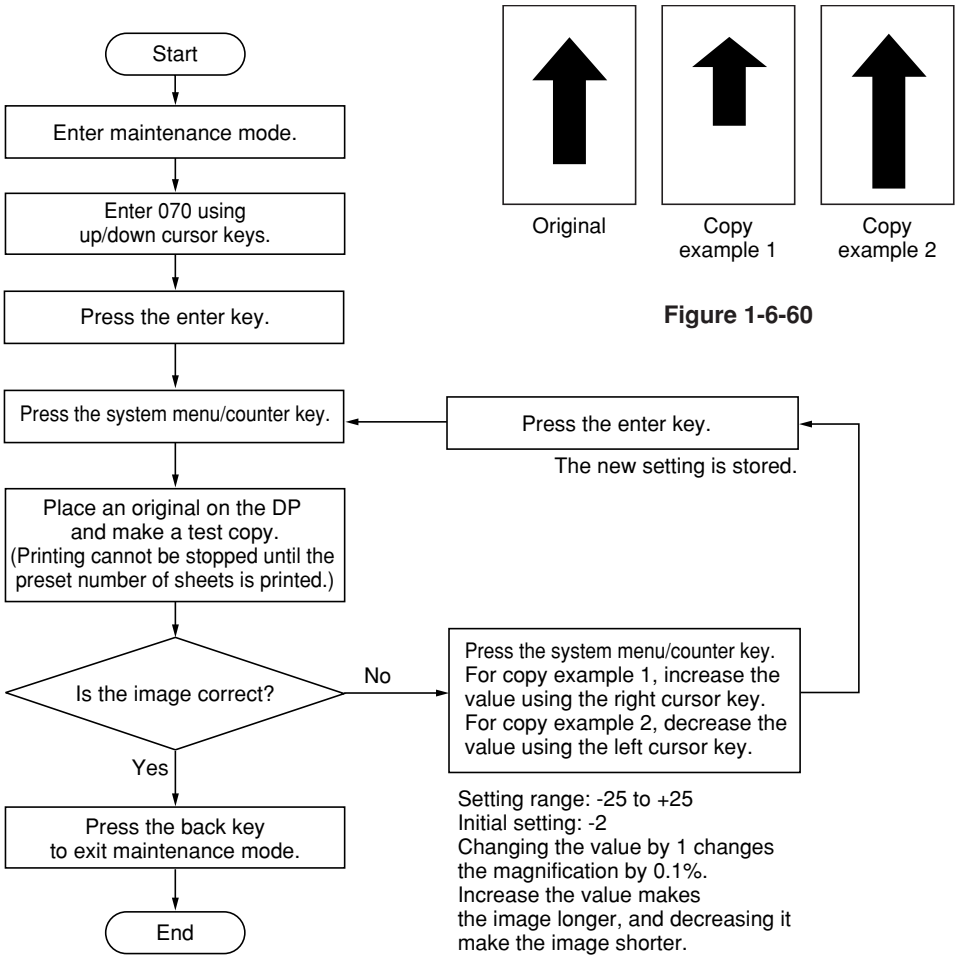

Figure 1-6-60

TONER
www.tonerplus.com.ua

(10) Adjusting the DP leading edge registration

Perform the following adjustment if there is a regular error between the leading edge of the original and the copy image.

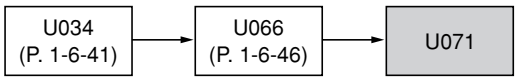

Caution:

Before making the following adjustment, ensure that the above adjustments have been made in maintenance mode.

Procedure

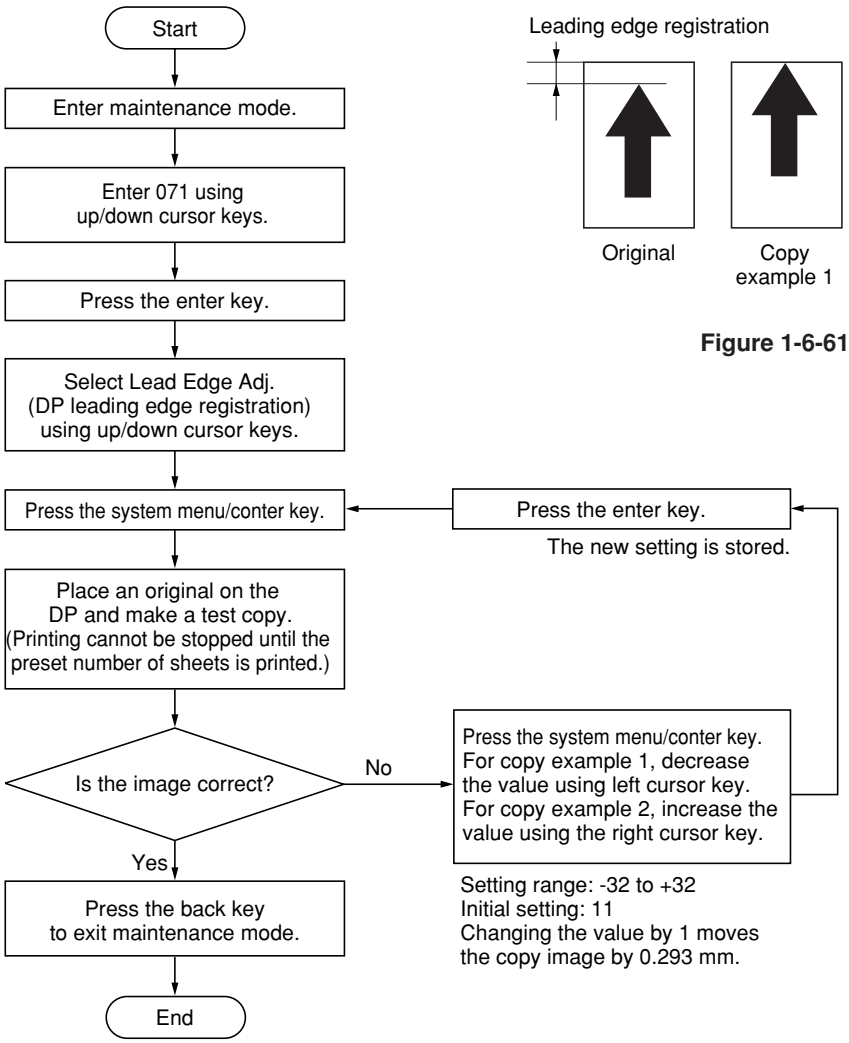

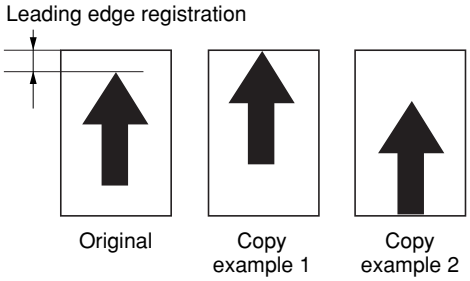

Figure 1-6-61

TONER
www.tonerplus.com.ua

(11) Adjusting the DP trailing edge registration

Perform the following adjustment if the original scanning end position is not correct when the DP is used.

Caution:

If the copy image looks like copy example 2, clean the DP original scanning section.

Procedure

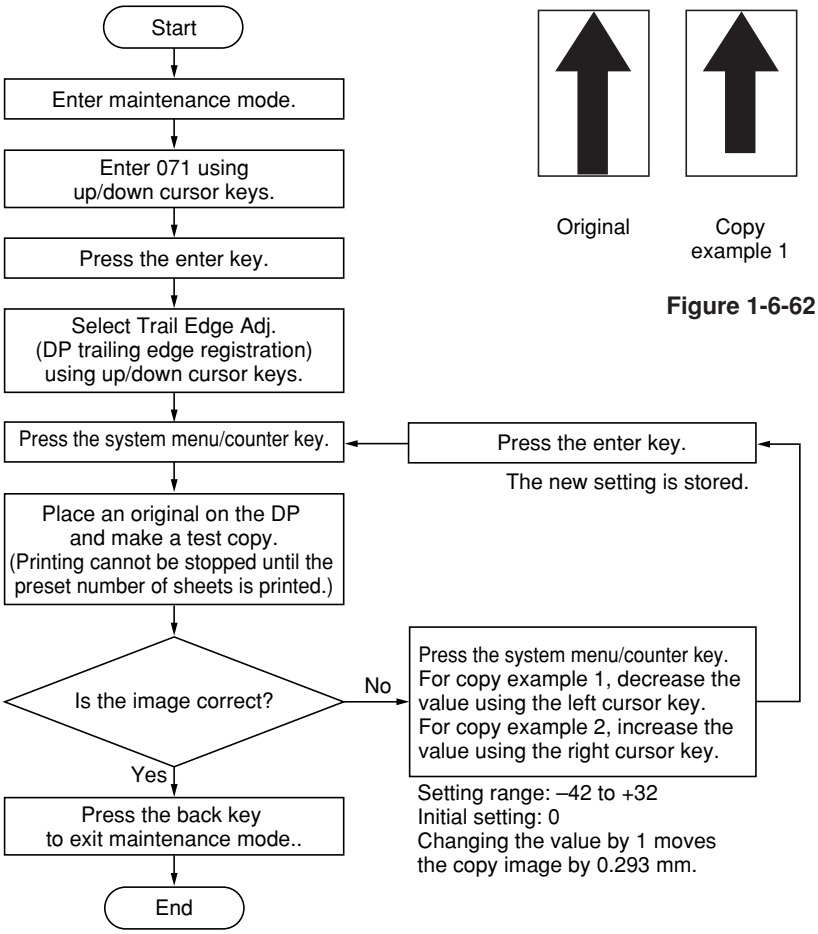

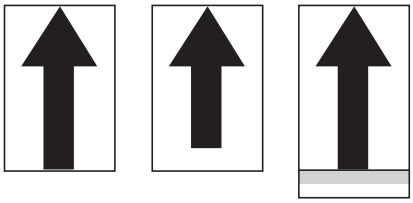

Figure 1-6-62

TONER
www.tonerplus.com.ua

(12) Adjusting the DP center line

Perform the following adjustment if there is a regular error between the centers of the original and the copy image.

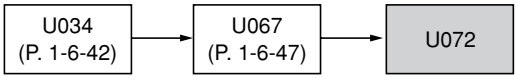

Caution:

Before making the following adjustment, ensure that the above adjustments have been made in maintenance mode.

Procedure

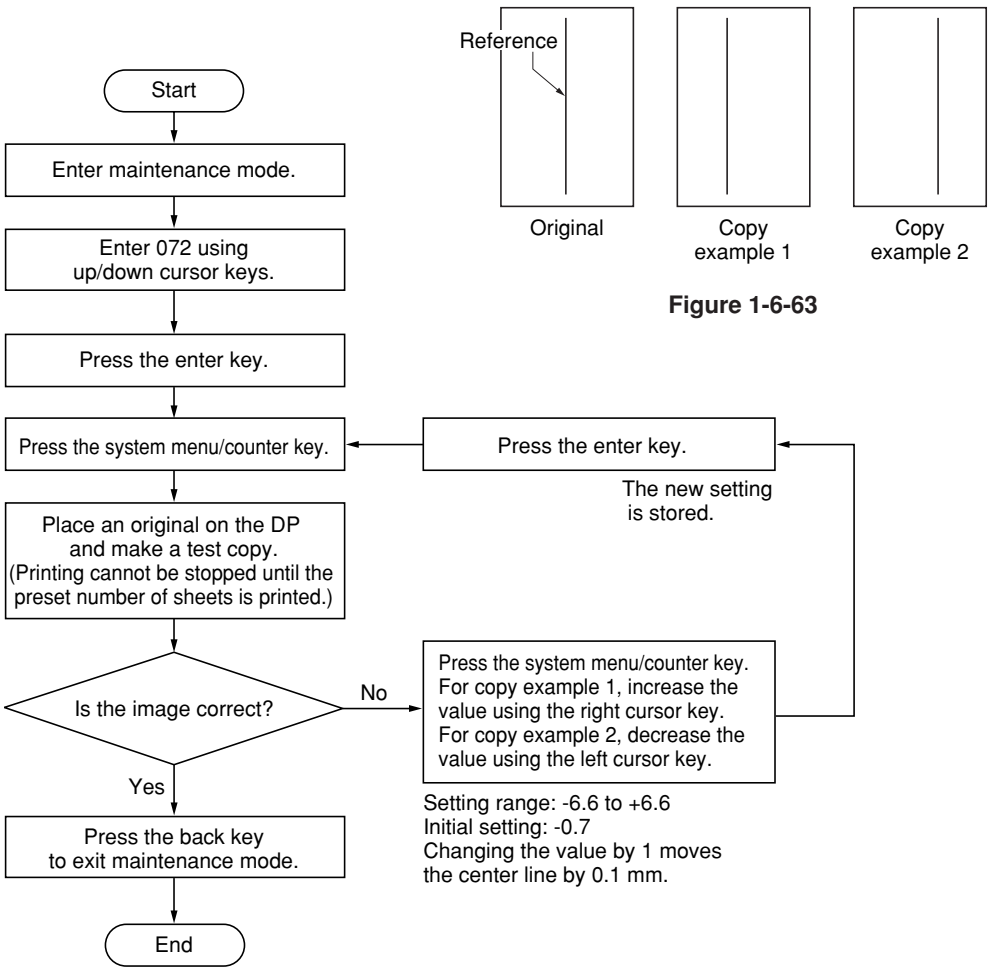

Figure 1-6-63

TONER
www.tonerplus.com.ua

(13) Adjusting the margins for scanning the original from the DP

Perform the following adjustment if margins are not correct.

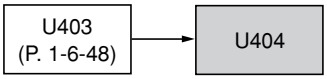

Caution:

Before making the following adjustment, ensure that the above adjustments have been made in maintenance mode.

Procedure

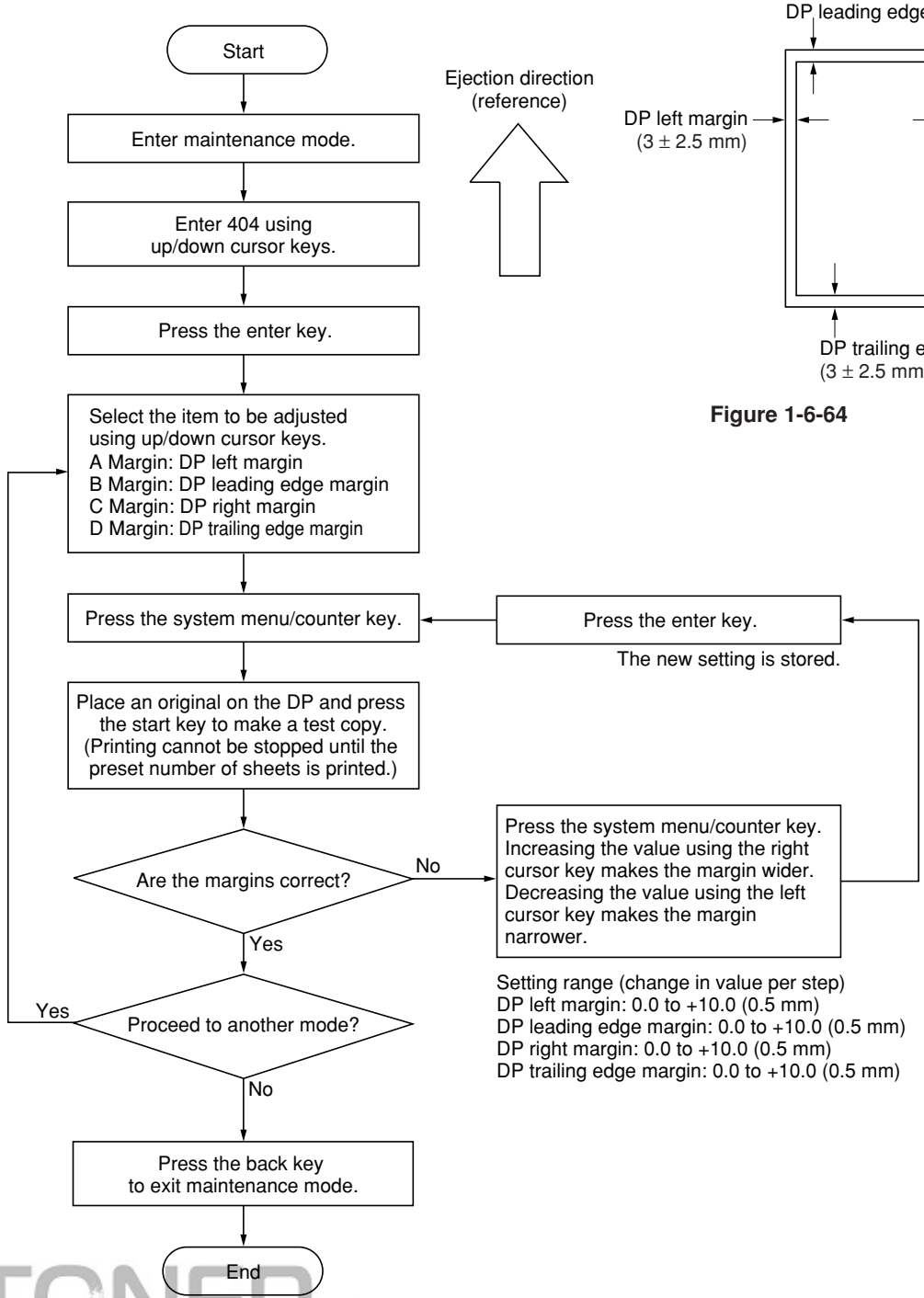

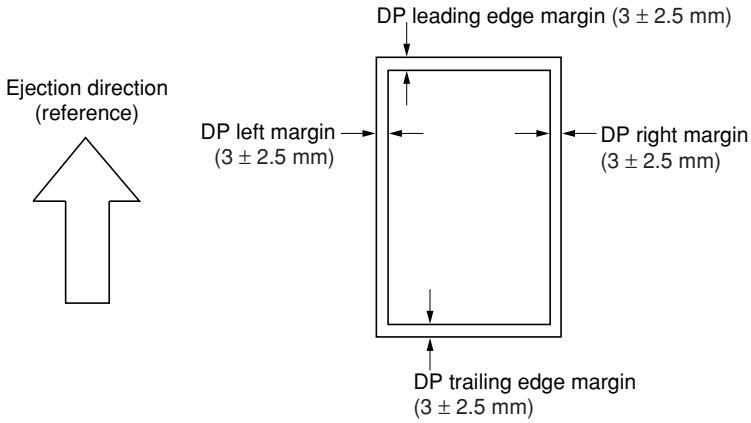

Figure 1-6-64

TONER
www.tonerplus.com.ua

1-7-1 Upgrading the firmware on the main PWB

• When using Compact Flash

Firmware upgrading requires the following tools:
Compact Flash (Products manufactured by SANDISK are recommended.)

NOTE
• When writing data from a computer to a new Compact Flash, be sure to format it from the computer in advance.
• Since the data is supplied with a compressed file, extract the data and then write it to the Compact Flash.
• Do not write data other than the files below to the Compact Flash.
Folder
NANDinstall: NAND side Install command group
NORinstall: NOR side Install command group
File
VERDEF: Configuration file
ppcboot.bin: Boot program
zImage.kmmfp: Kernel program
initrd.bin: Initialization processing file
rootdiskimage.cramfs: Controller program
setupdiskimage.cramfs: Controller program setting file
• Before upgrading the firmware, make sure to quit the web browser displaying COMMAND CENTER.
• After completing the firmware upgrading, restart the web browser to connect to COMMAND CENTER as necessary.

Procedure
1. Turn the power switch off and disconnect the power plug.
2. Remove the pin and then remove the memory cover.
3. Remove two screws and then remove the CF cover.
4. Insert Compact Flash in a CF slot on the main PWB.
   * Insert it straight all the way into the machine with the front side facing the rear of the machine. If the power switch is turned on when the Compact Flash is not properly inserted, the main PWB may be damaged.
5. Insert the power plug and turn the power switch on.
   * Downloading is displayed on the operation panel and firmware upgrade operation will start (for approximately 2 minutes and 15 seconds).
   Caution:
   Never turn the power switch off during upgrading.
6. Completed is displayed on the operation panel when upgrading is complete.
7. Turn the power switch off and disconnect the power plug.
8. Remove Compact Flash from the main PWB.
9. Refit the CF cover and memory cover.
10. Insert the power plug and turn the power switch on.

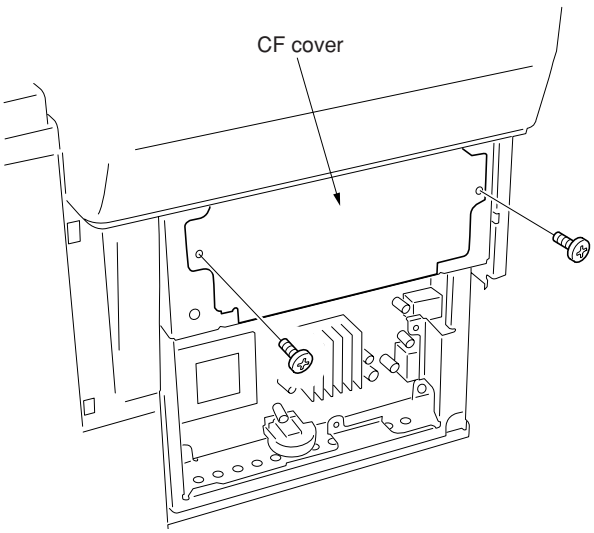

Figure 1-7-1

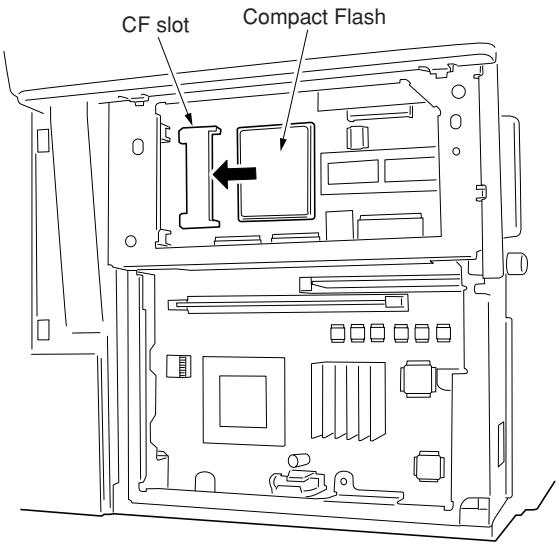

Figure 1-7-2

TONER
www.tonerplus.com.ua

• When replacing DIMM

Firmware upgrading requires the following tools:
DIMM (P/N 2GM01210/302GM01210)

Procedure

1. Turn the power switch off and disconnect the power plug.
2. Remove the pin and then remove the memory cover.
3. Remove the DIMM from the DIMM slot on the main PWB.
4. Insert the new DIMM into the DIMM slot on the main PWB.
   * Insert the DIMM securely all the way into the slot. If the power switch is turned on when the DIMM is not properly inserted, the main PWB may be damaged.
5. Refit the memory cover.
6. Insert the power plug and turn the power switch on.

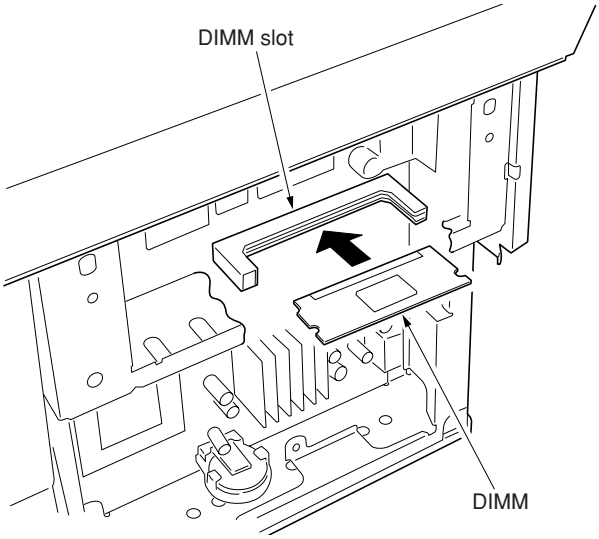

Figure 1-7-3

TONER
www.tonerplus.com.ua

2-1-1 Paper feeding system

The paper feeding system picks up paper from the cassette, MP tray, or if installed, the optional cassette, feeds it in the machine, and delivers in the output tray. Paper is fed at the precise timing in synchronization with data processing. The paper feeding system finally delivers the printed page to either the face-down or face-up tray as manipulated by the user.

The figure below shows the components in the paper feeding system and the paths through which the paper travels. The sensors, clutches, etc., are described in the following pages.

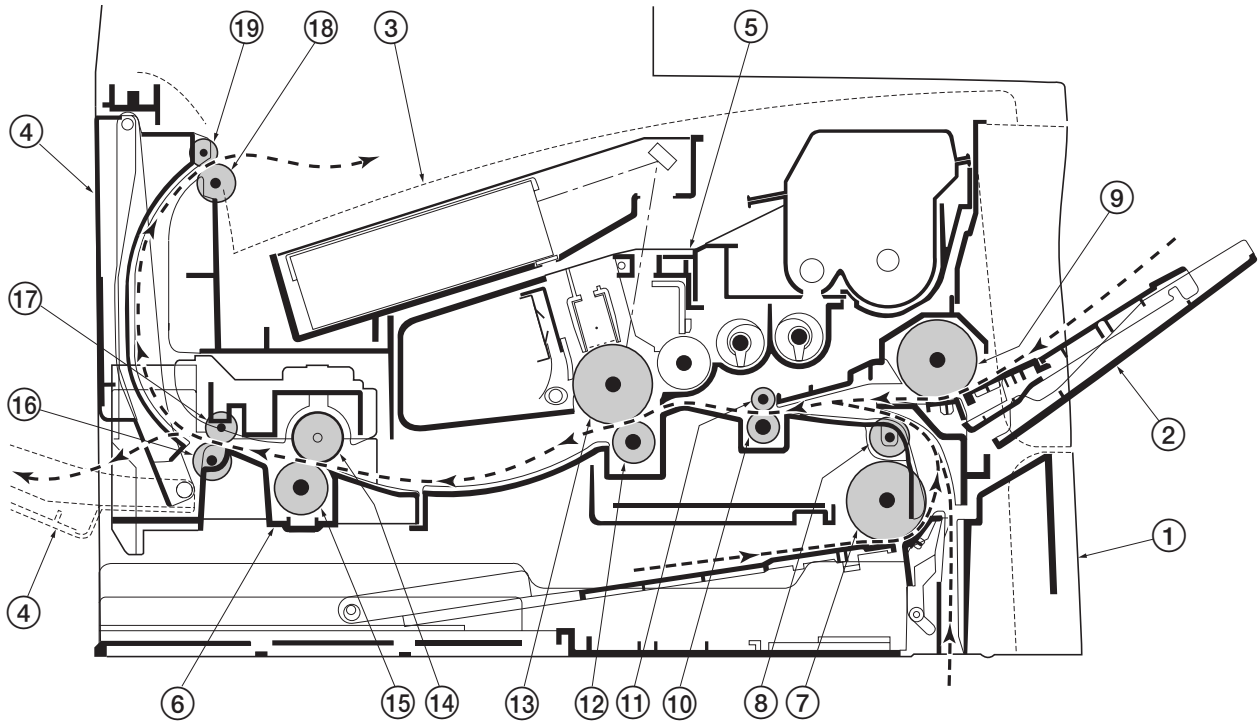

Figure 2-1-1 Paper feeding path

① Cassette
② MP tray
③ Face-down output tray
④ Face-up output tray
⑤ Process unit
⑥ Fuser unit
⑦ Feed roller
⑧ Feed pulley
⑨ MP feed roller
⑩ Lower registration roller
⑪ Upper registration roller
⑫ Transfer roller
⑬ Drum
⑭ Heat roller
⑮ Press roller
⑯ Lower exit roller
⑰ Exit pulley
⑱ Upper exit roller
⑲ Exit pulley

TONER
www.tonerplus.com.ua

(1) Paper feed control

The following diagram shows interconnectivity of the feeding system components including the sensors and rollers. The engine PWB provides the signals in conjunction with the electrophotography process that is driven by the main PWB.

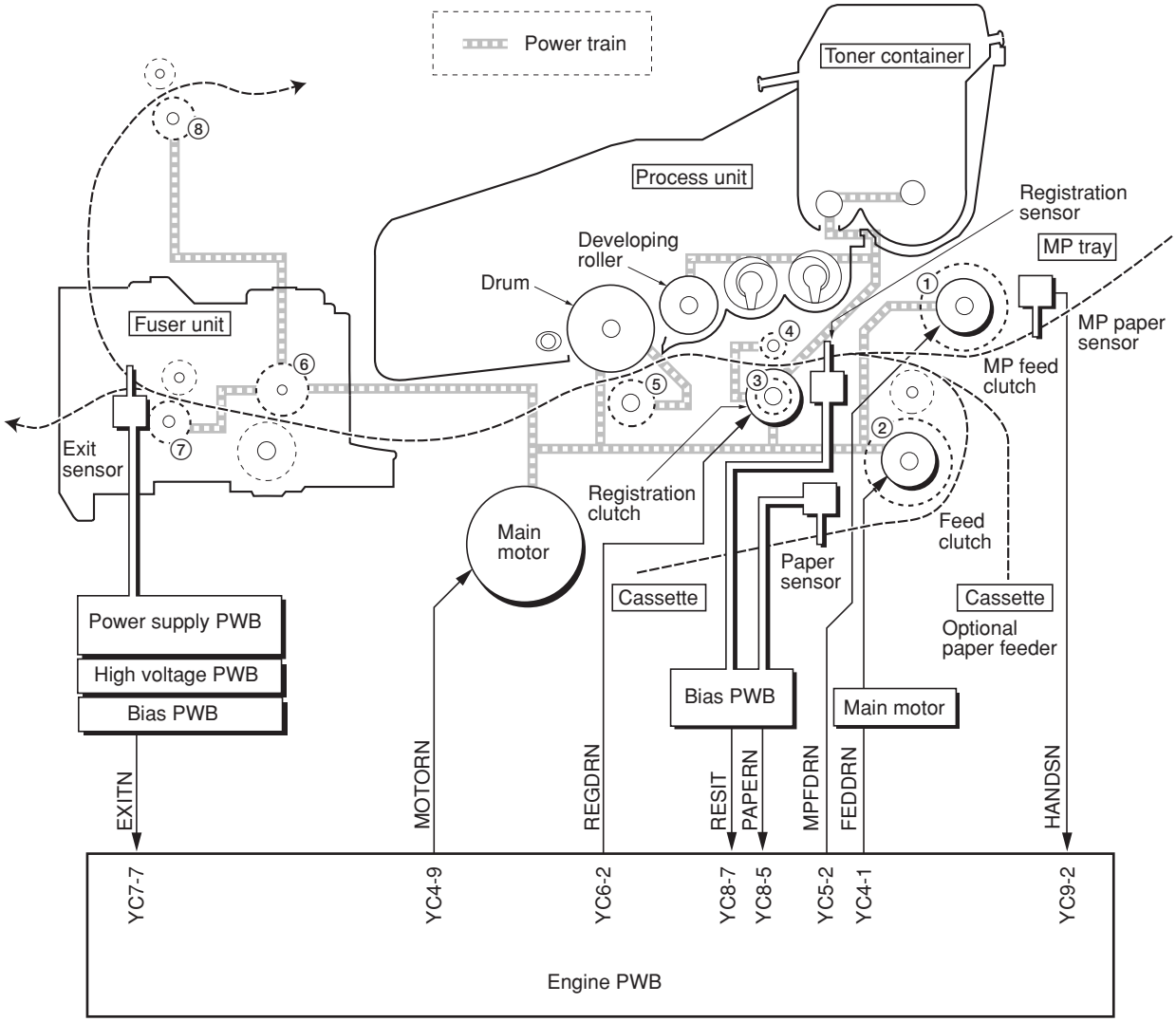

① MP feed roller ② Feed roller ③ Lower registration roller ④ Upper registration roller
⑤ Transfer roller ⑥ Heat roller ⑦ Lower exit roller ⑧ Upper exit roller

Figure 2-1-2 Paper feed control

TONER
www.tonerplus.com.ua

(2) Paper feeding mechanism

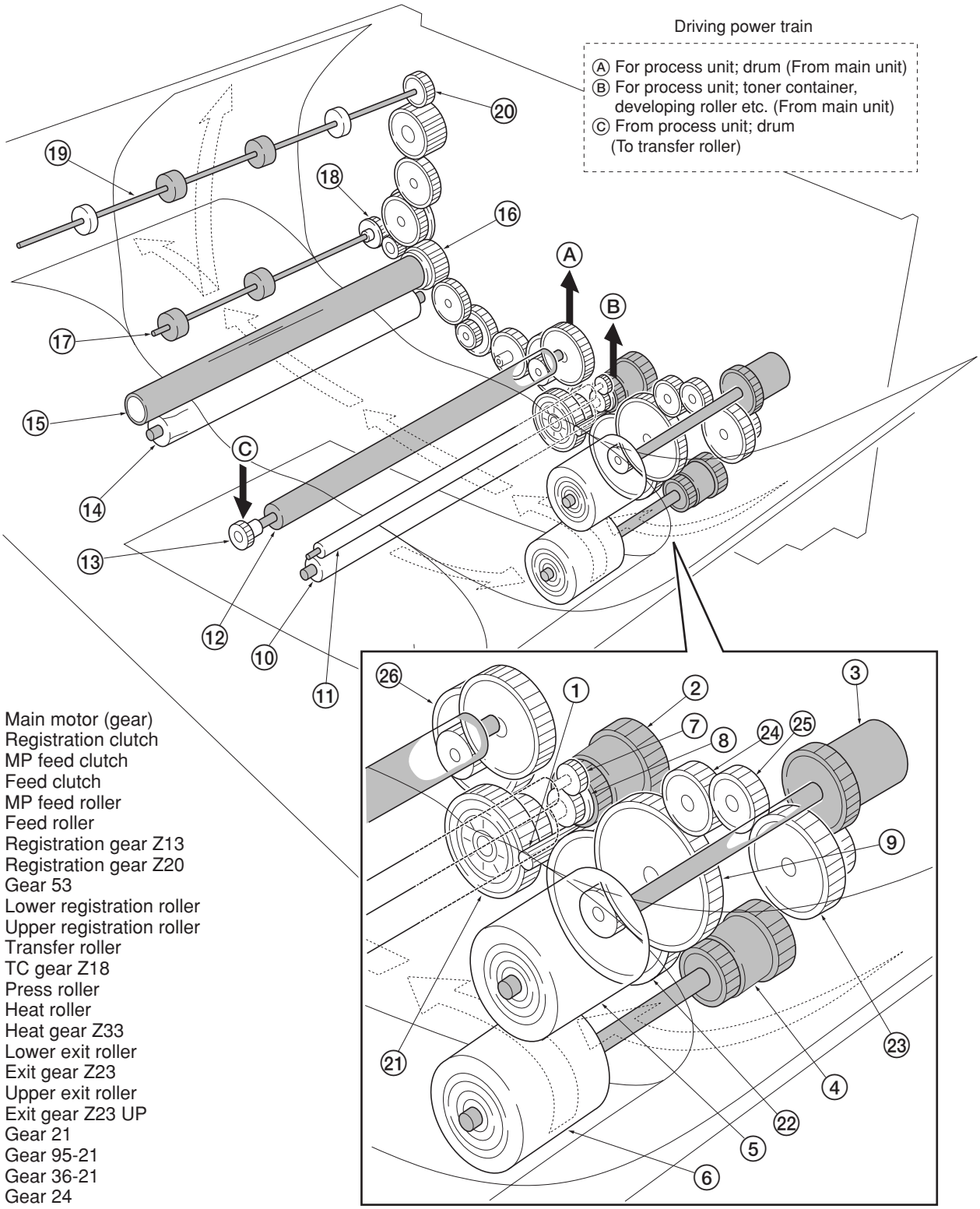

① Main motor (gear)
② Registration clutch
③ MP feed clutch
④ Feed clutch
⑤ MP feed roller
⑥ Feed roller
⑦ Registration gear Z13
⑧ Registration gear Z20
⑨ Gear 53
⑩ Lower registration roller
⑪ Upper registration roller
⑫ Transfer roller
⑬ TC gear Z18
⑭ Press roller
⑮ Heat roller
⑯ Heat gear Z33
⑰ Lower exit roller
⑱ Exit gear Z23
⑲ Upper exit roller
⑳ Exit gear Z23 UP
㉑ Gear 21
㉒ Gear 95-21
㉓ Gear 36-21
㉔ Gear 24
㉕ Gear 21
㉖ Gear 48-21

Figure 2-1-3 Paper feeding mechanism

TONER
www.tonerplus.com.ua

2-1-2 Original scanning system

The scanner unit consists of the image scanning unit (ISU) for main-direction scanning, and drive part for traveling the ISU unit to sub-direction.

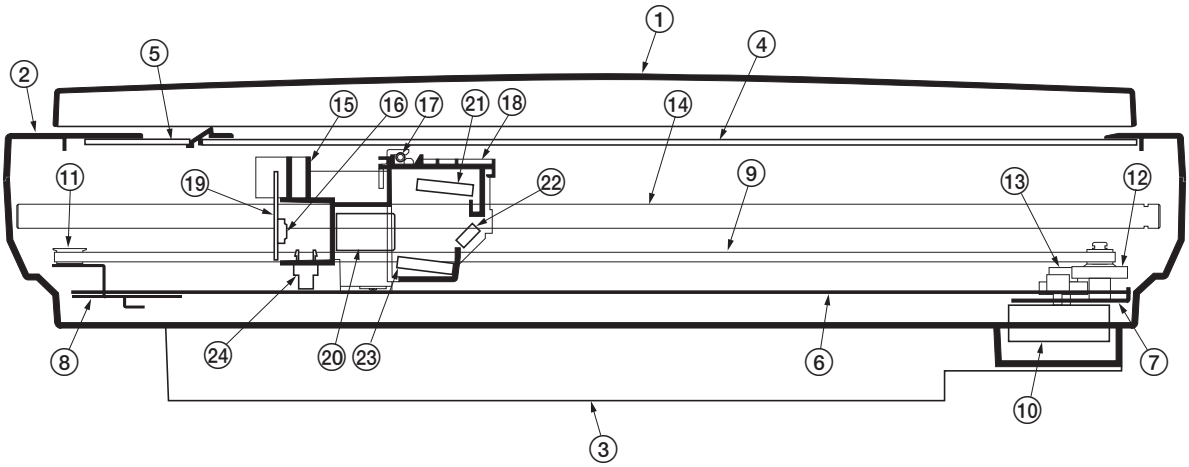

Figure 2-1-4 Scanner unit

① Original holder
② Scanner upper frame
③ Scanner lower frame
④ Contact glass
⑤ DP Contact glass
⑥ Scanner rail
⑦ Scanner motor mount
⑧ Tension pulley mount
⑨ Scanner belt
⑩ Scanner motor
⑪ Tension pulley
⑫ Scanner gear 45/18
⑬ Scanner gear 39/22
⑭ Scanner shaft
⑮ ISU housing
⑯ CCD image sensor
⑰ Exposure lamp
⑱ Exposure lamp mount
⑲ CCD PWB
⑳ ISU lens
㉑ Mirror A
㉒ Mirror B
㉓ Mirror A
㉔ Scanner home position sensor

TONER
www.tonerplus.com.ua

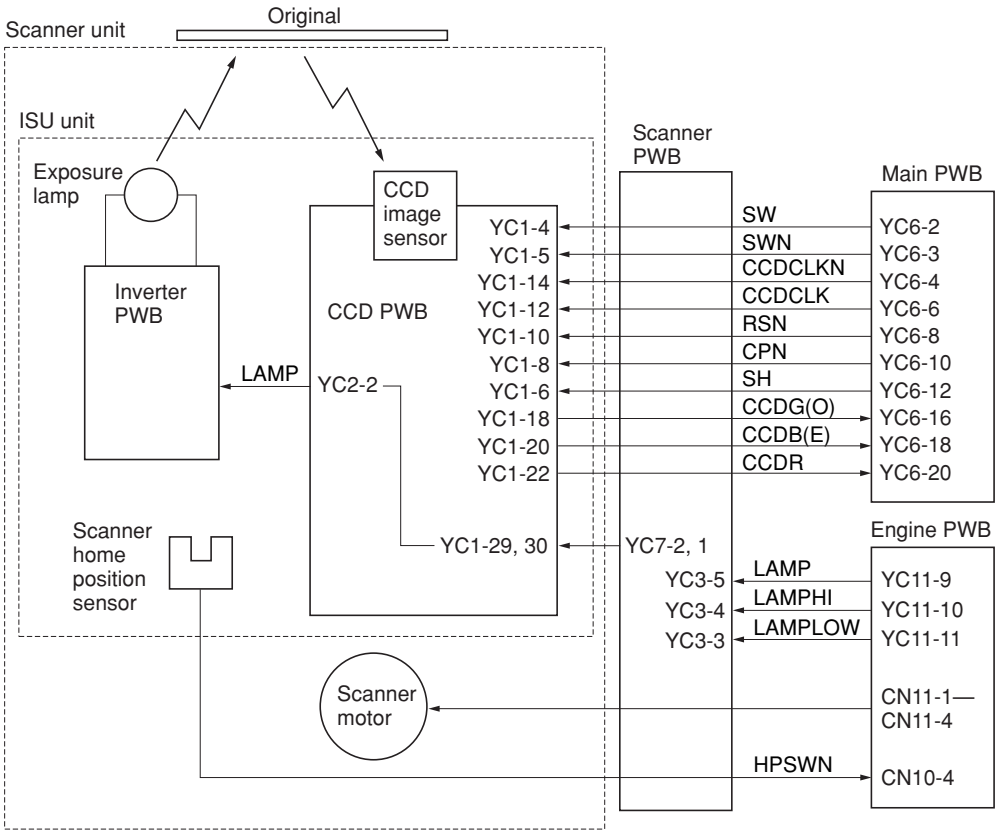

Figure 2-1-5 Scanner control circuit block diagram

TONER
www.tonerplus.com.ua

(1) ISU unit

The ISU unit consists of an exposure lamp, three mirrors, an ISU lens, a CCD PWB, and so on. Also an inverter PWB for driving the exposure lamp and a scanner home position sensor for detecting the home position of the ISU unit are incorporated.

The original on the contact glass is exposed to the light of the exposure lamp that is reflected by the reflector. The image is input through reflection by the three mirrors and through the ISU lens to the CCD image sensor on the CCD PWB. The CCD image sensor scans one row of the image in the main scan direction, converts it to electric signals, and outputs them to the main PWB. Then the ISU unit is moved in the sub scan direction along the scanner shaft, and the CCD image sensor scans the next row of the image in the main scan direction. The operation described above is repeated for scanning the overall image of the original. If an optional DP is used, the ISU unit stops at the position of the DP contact glass and scans sequentially one row of the image on the original in synchronization with the moving timing of the original in the sub scan direction by driving the DP.

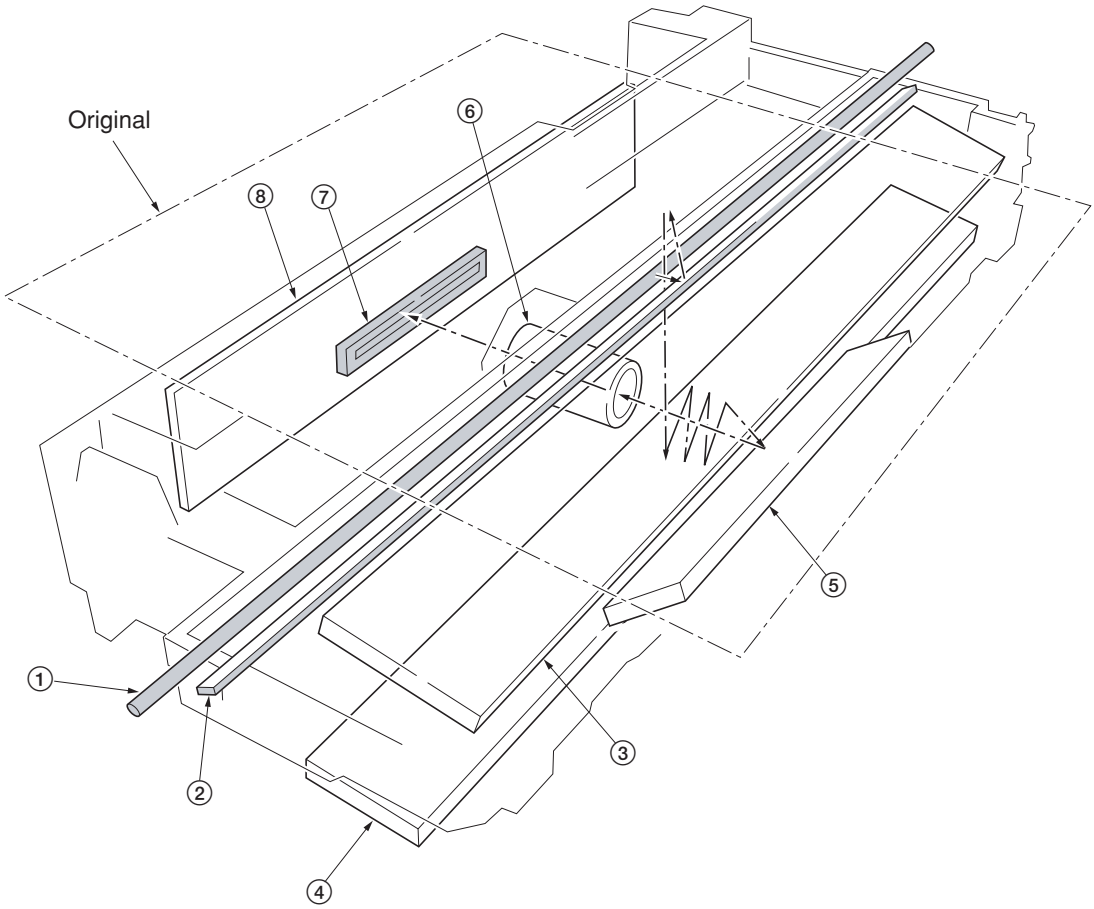

Figure 2-1-6 ISU unit

① Exposure lamp
② Scanner reflector
③ Mirror A
④ Mirror A
⑤ Mirror B
⑥ ISU lens
⑦ CCD image sensor
⑧ CCD PWB

TONER
www.tonerplus.com.ua

2-1-3 Electrophotographic system

Electrophotography is the technology used in laser printing which transfer data representing texts or graphics objects into a visible image which is developed on the photosensitive drum, finally fusing on paper, using light beam generated by a laser diode.

This section provides technical details on the machine's electrophotography system.

(1) Electrophotographic cycle
The electrophotography system of the machine performs a cyclic action made of six steps as follows. Each step is technically explained in the following sections.

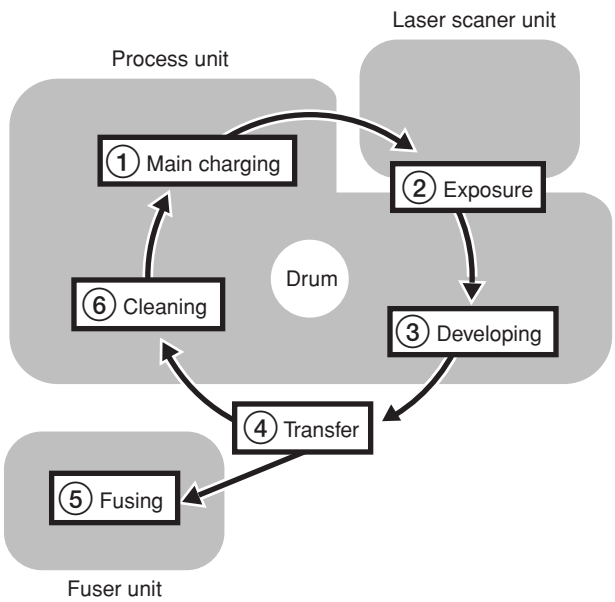

Figure 2-1-7 Electrophotographic cycle

The sections for main charging, exposure (drum), developing, and cleaning are modularized in one Process unit.

TONER
www.tonerplus.com.ua

(1-1) Process unit mechanism

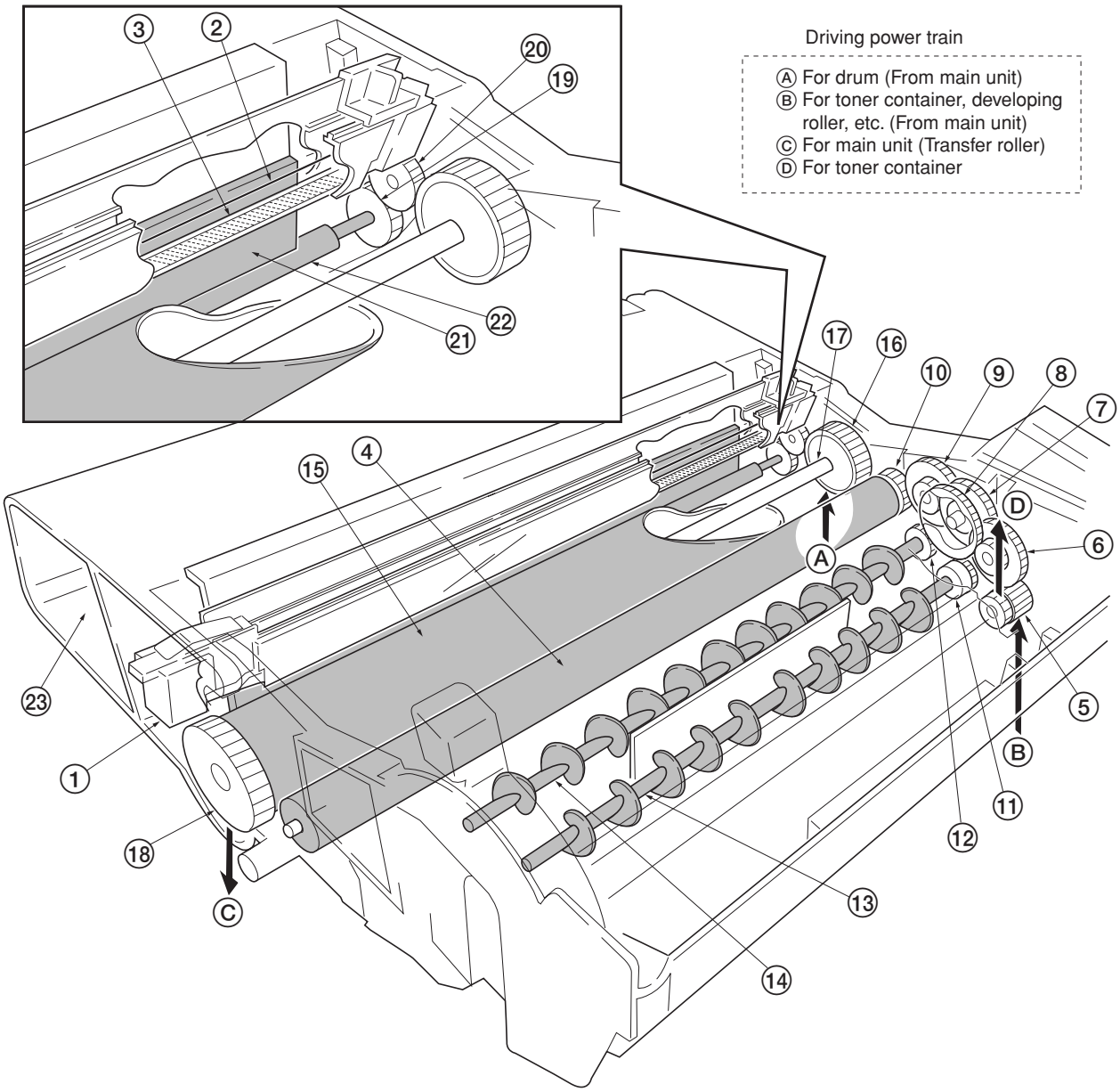

Figure 2-1-8 Process unit mechanism

① Main charger unit
② Charger wire
③ Grid
④ Developing roller
⑤ Gear Z14-Z18
⑥ Gear Z14-Z36
⑦ Gear Z18-Z36
⑧ Free gear Z40
⑨ Gear Z18-Z35H
⑩ MAG gear Z24H
⑪ Mixer gear Z20 B
⑫ Mixer gear Z20 A
⑬ DLP screw B
⑭ DLP screw A
⑮ Drum
⑯ Drum gear Z35H
⑰ Drum shaft
⑱ Drum gear Z36
⑲ Sweep gear Z13
⑳ Idle gear 18H
㉑ Cleaning blade
㉒ Sweep roller
㉓ Waste toner reservoir

TONER
www.tonerplus.com.ua

(2) Main charging

(2-1) Photo conductive drum

The durable layer of organic photoconductor (OPC) is coated over the aluminum cylinder base. The OPC tend to reduce its own electrical conductance when exposed to light. After a cyclic process of charging, exposure, and development, the electrostatic image is constituted over the OPC layer.

Since the OPC is materialized by resin, it is susceptible to damage caused by sharp edges such as a screwdriver, etc., resulting in a print quality problem. Also, finger prints can cause deterioration of the OPC layer, therefore, the drum (in the process unit) must be handled with care. Substances like water, alcohol, organic solvent, etc., should be strictly avoided.

As with all other OPC drums, the exposure to a strong light source for a prolonged period can cause a print quality problem. The limit is approximately 500 lux for less than five minutes. If the drum (process unit) remains removed form the machine, it should be stored in a cool, dark place.

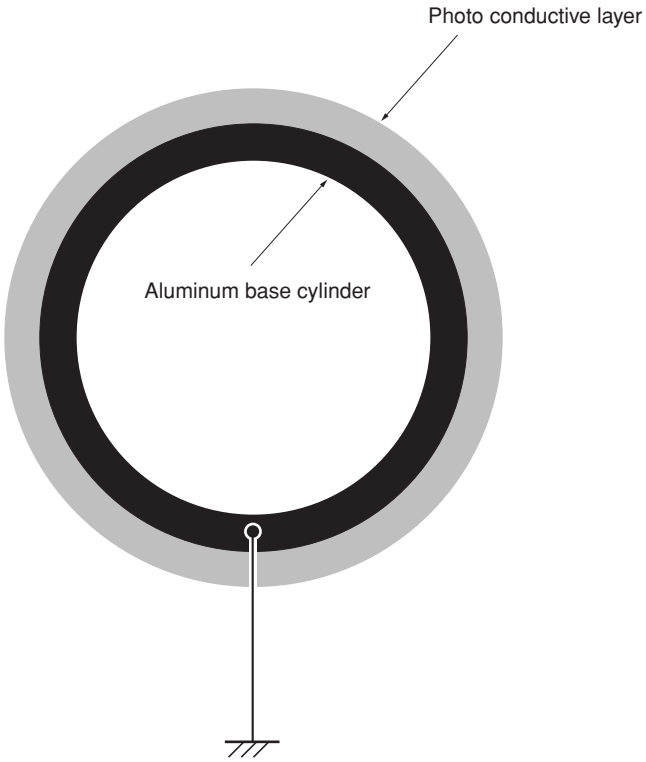

Figure 2-1-9 Photo conductive drum

TONER
www.tonerplus.com.ua

(2-2) Charging the drum
The following shows a simplified diagram of the electrophotographic components in relation to the engine system. Charging the drum is done by the main charger unit.

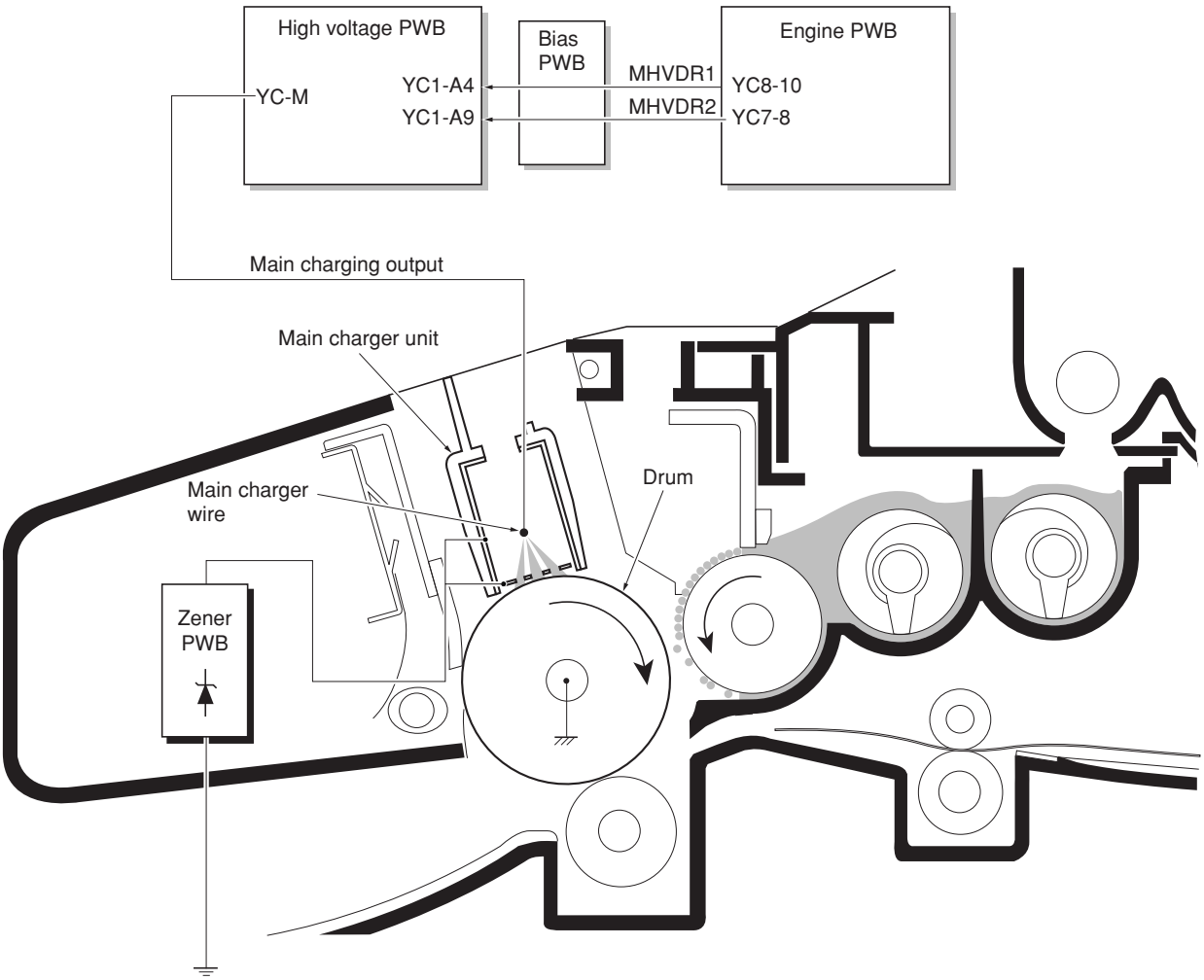

Figure 2-1-10 Charging the drum

As the drum rotates in a clean (neutral) state, its photoconductive layer is given a uniform, positive (+) corona charge dispersed by the main charger wire.

Due to high-voltage scorotron charging, the charging wire can get contaminated by oxidization after a long run. Therefore, it must be cleaned periodically from time to time. Cleaning the charging wire prevents print quality problems such as black streaks.

TONER
www.tonerplus.com.ua

(3) Exposure
The charged surface of the drum is then scanned by the laser beam from the laser scanner unit.

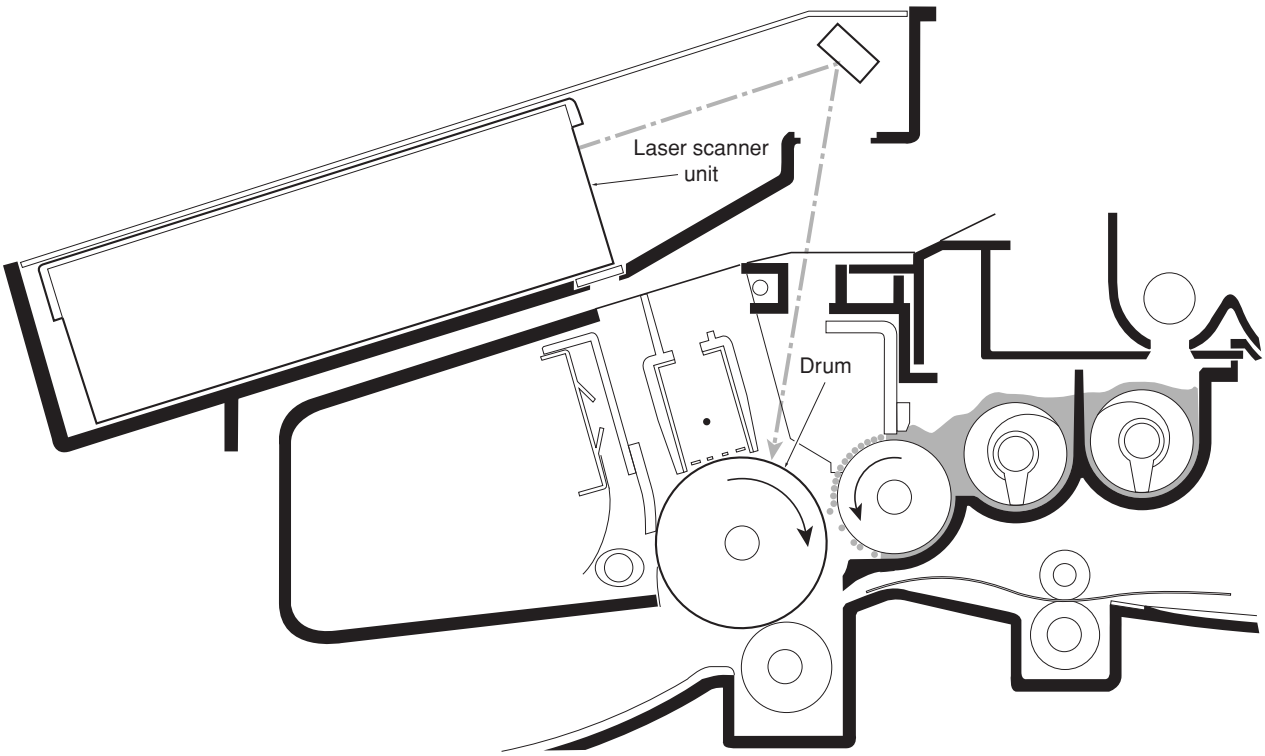

Figure 2-1-11 Exposure

The laser beam (780 nm wavelength) beam is dispersed as the polygon motor (polygon mirrors) revolves to reflect the laser beam over the drum. Various lenses and mirror are housed in the scanner unit, adjust the diameter of the laser beam, and focalize it at the drum surface.

TONER
www.tonerplus.com.ua

(3-1) Laser scanner unit

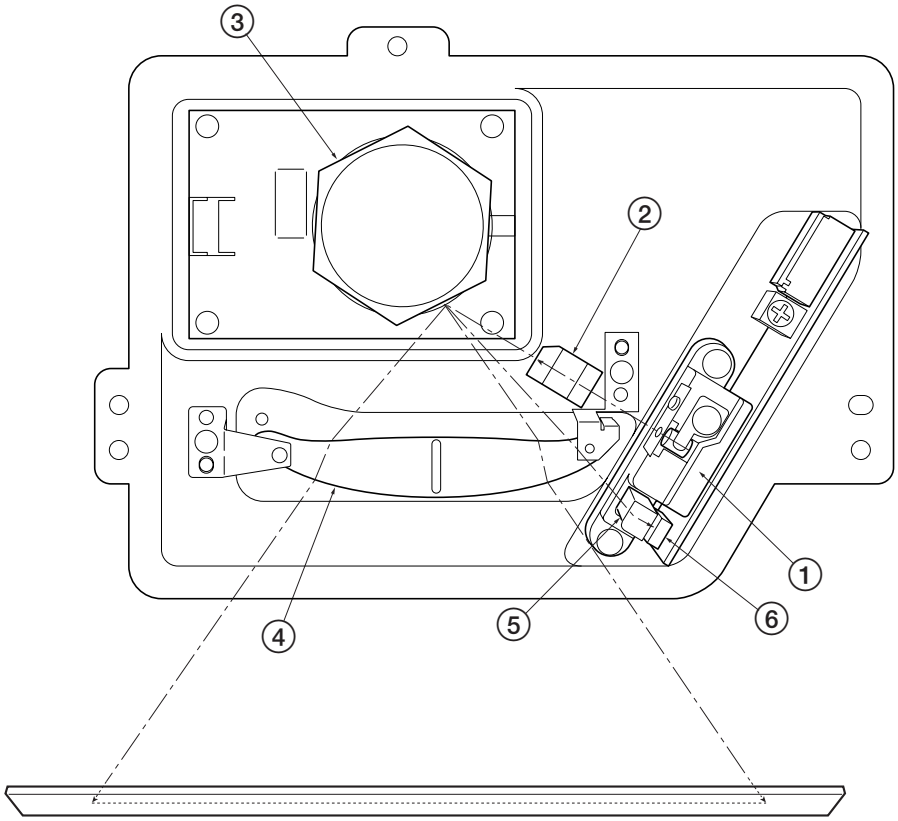

Figure 2-1-12 Laser scanner unit

① Laser diode ..... Emits diffused, visible laser.
② Cylindrical lens ..... Compensates the vertical angle at which the laser beam hits a polygon mirror segment.
③ Polygon mirror (motor) ..... Has six mirror segments around its hexagonal circumference; each mirror corresponding to one scanned line width on the drum when laser beam scans on it.
④ F-theta lens ..... The f-theta lens equalizes focusing distortion on the far ends of the drum.
⑤ Sensor mirror ..... Bends the very first shot of a laser scan towards the beam detection sensor (⑥).
⑥ Pin photo sensor ..... When shone by the sensor mirror above, this photo-sensor generates a trigger signal for the engine controller to start activating the paper feeding system.

TONER
www.tonerplus.com.ua

(3-2) Drum surface potential

The laser beam is continually switched on and off depending on the print data. It is on for a black (exposed) dot and off for a white (blank) dot. Since the drum surface is evenly charged, whenever it is illuminated by the laser beam, the electrical resistance of the photoconductor is reduced and the potential on the photoconductor is also lowered. Resulted on the drum surface is an electrostatic image which represents the data to print. Note that the area to be printed black has the low potential, constituting a positively exposed image.

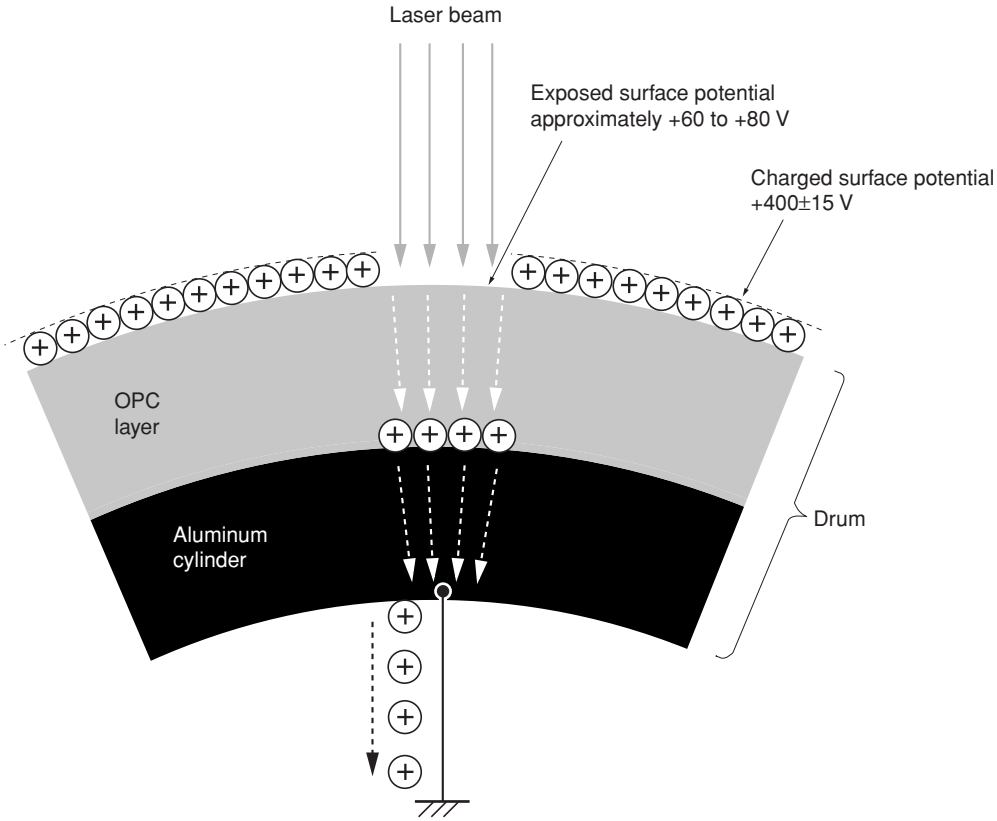

Figure 2-1-13 Drum surface potential

TONER
www.tonerplus.com.ua

(4) Development

The latent image constituted on the drum is developed into a visible image. The developing roller contains a 3-pole (S-N-S) magnet core and an aluminum cylinder rotating around the magnet core. Toner attracts to the developing roller since it is powdery ink made of black resin bound to iron particles. Doctor blade, magnetized by magnet, is positioned approximately 0.3 mm above the developing roller to constitute a smooth layer of toner in accordance with the roller revolution.

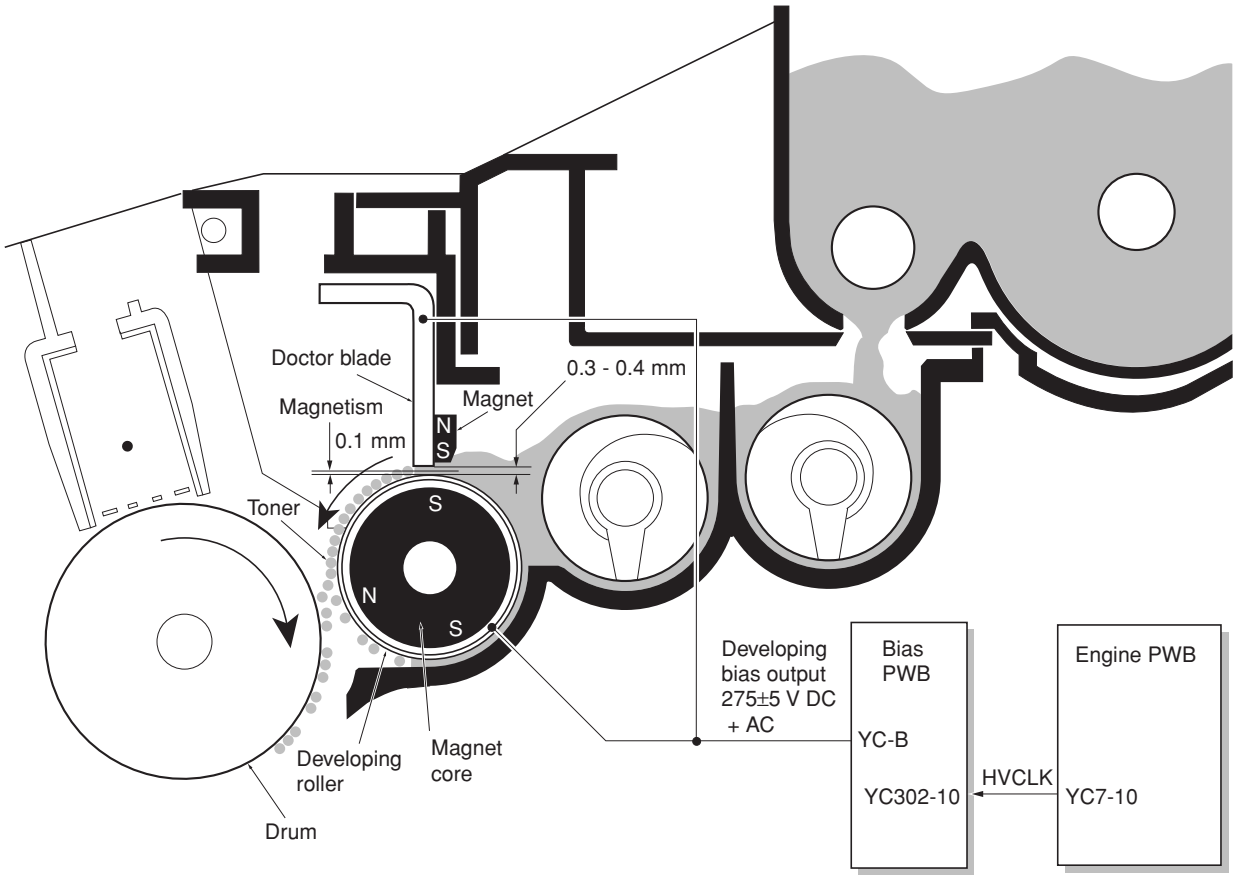

Figure 2-1-14 Development

The developing roller is applied with the AC-weighted, positive DC power source. Toner on the developing roller is given a positive charge. The positively charged toner is then attracted to the areas of the drum which was exposed to the laser light. (The gap between the drum and the developing roller is approximately 0.3 mm.) The non-exposed areas of the drum repel the positively charged toner as these areas maintain the positive charge.
The developing roller is also AC-biased to ensure contrast in yielding by compensating the toner's attraction and repelling action during development.

TONER
www.tonerplus.com.ua

(5) Transfer

The image developed by toner on the drum is transferred onto the paper because of the electrical attraction between the toner itself and the transfer roller. The transfer roller is negatively biased so that the positively charged toner is attracted onto the paper while it is pinched by the drum and the transfer roller.

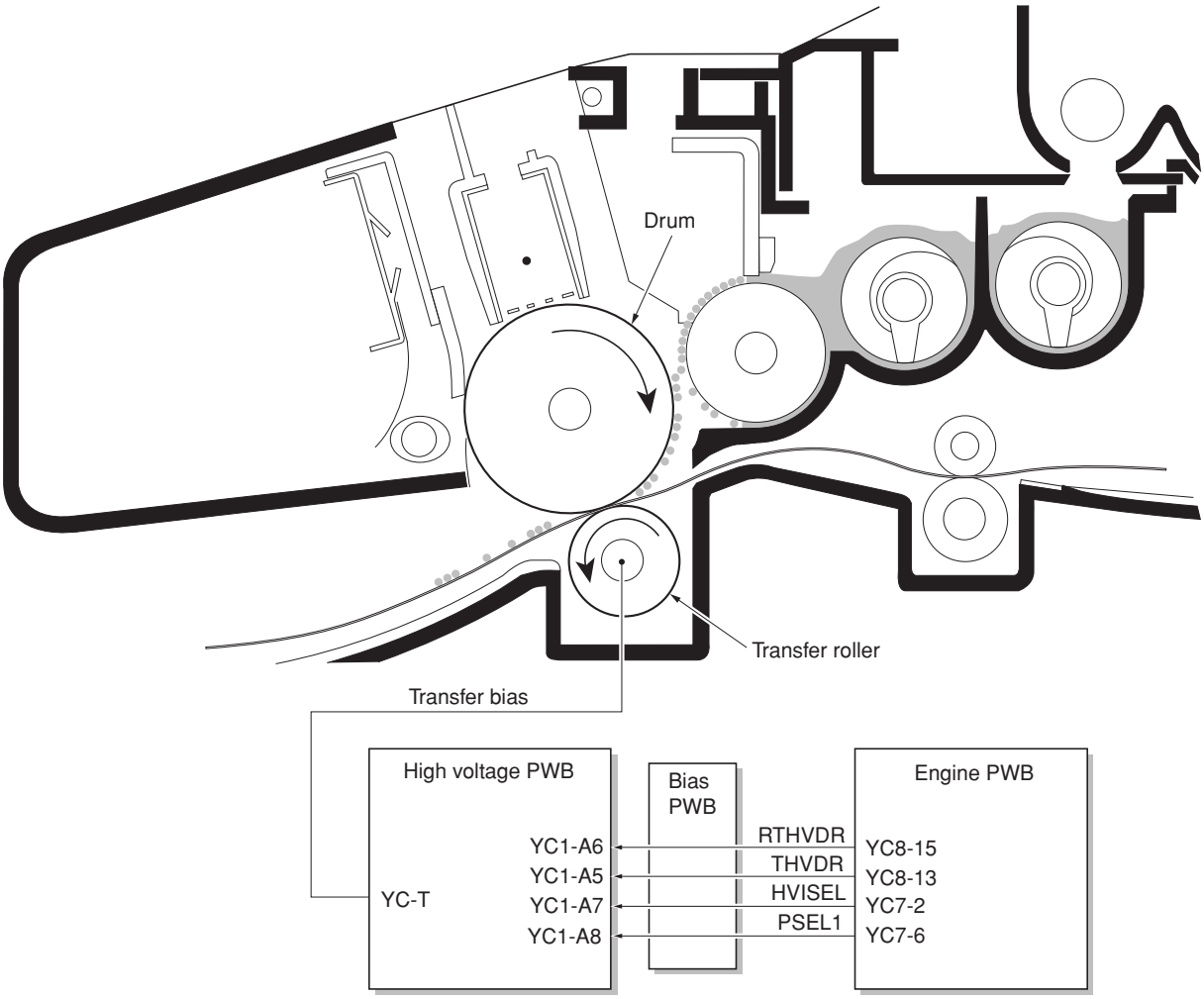

Figure 2-1-15 Transfer

The nominal transfer bias is set to approximately -1.8 kV (limit) with the -6 mA current. Since the ideal potential of the transfer bias depends on the thickness of paper, the bias is raised to approximately -2.5 kV/-6 mA for thicker paper. On the other hand, the bias current is reduced to -1.8 kV/-6 mA for thin paper.

TONER
www.tonerplus.com.ua

(6) Fusing

The toner on the paper is molten and pressed into the paper as it passes between the heat roller and the press roller in the fuser unit.

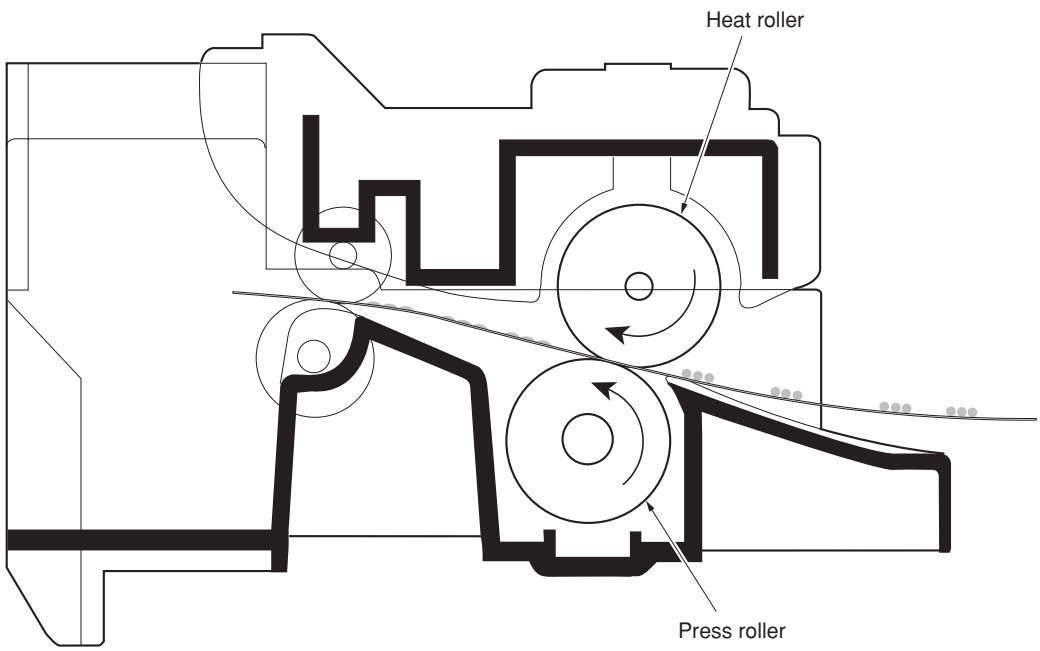

Figure 2-1-16 Fusing

The heat roller has a halogen lamp inside which continuously turns on and off by the thermistor to maintain the constant temperature onto the heat roller surface.
The heat roller is resin coated by florin to prevent toner from accumulating on the roller after a long run. Care must be taken while handling the heat roller not to scratch the roller surface as doing so may result in print problems.
The heat roller has four claws which are continuously in contact with its surface. These claws prevent the paper on which toner has been fused from being wound around the heat roller causing paper jam.

The pressure roller is made of the heat-resistant silicon rubber. This roller is used to strongly press the paper towards the heat roller by means of coil springs.
The temperature of the heat roller is constantly monitored by the engine PWB using the thermistor and triac. Should the temperature of the heat roller exceed the predetermined value, the thermal cutout is activated to effectively disconnect the heater (halogen) lamp from power.

TONER
www.tonerplus.com.ua

(6-1) Fuser unit mechanism

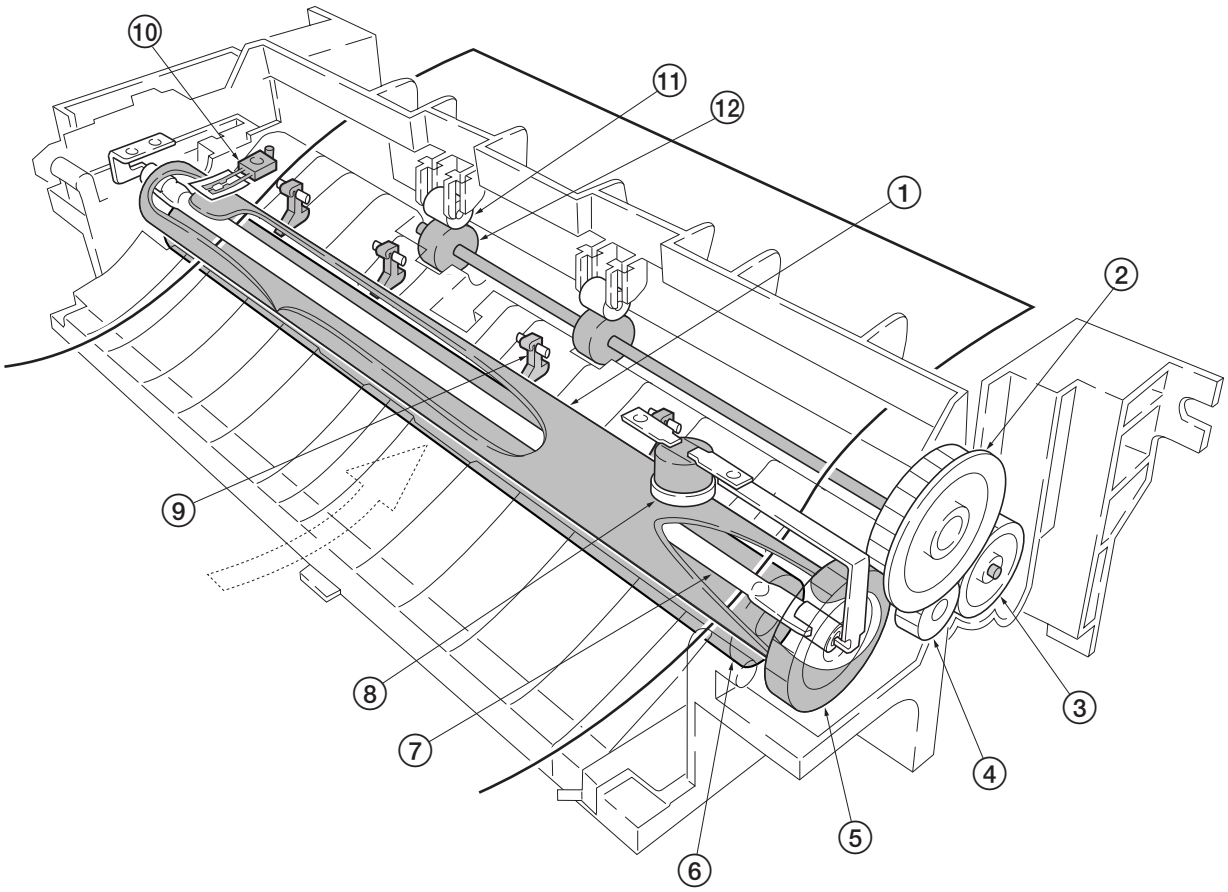

Figure 2-1-17 Fuser unit mechanism

① Heat roller
② Idle gear Z34
③ Exit gear Z23
④ Idle gear Z18
⑤ Heat gear Z33
⑥ Press roller
⑦ Heater lamp
⑧ Thermal cutout
⑨ Separator(s)
⑩ Thermistor
⑪ Exit pulley(s)
⑫ Lower exit roller

TONER
www.tonerplus.com.ua

(7) Cleaning
After the transferring process, the drum needs to be physically cleaned of toner which is residual after the development process. The cleaning blade is constantly pressed against the drum and scrapes the residual toner off to the sweep roller. The waste toner is collected at the output end of the sweep roller and sent back to the toner container, into the waste toner reservoir.

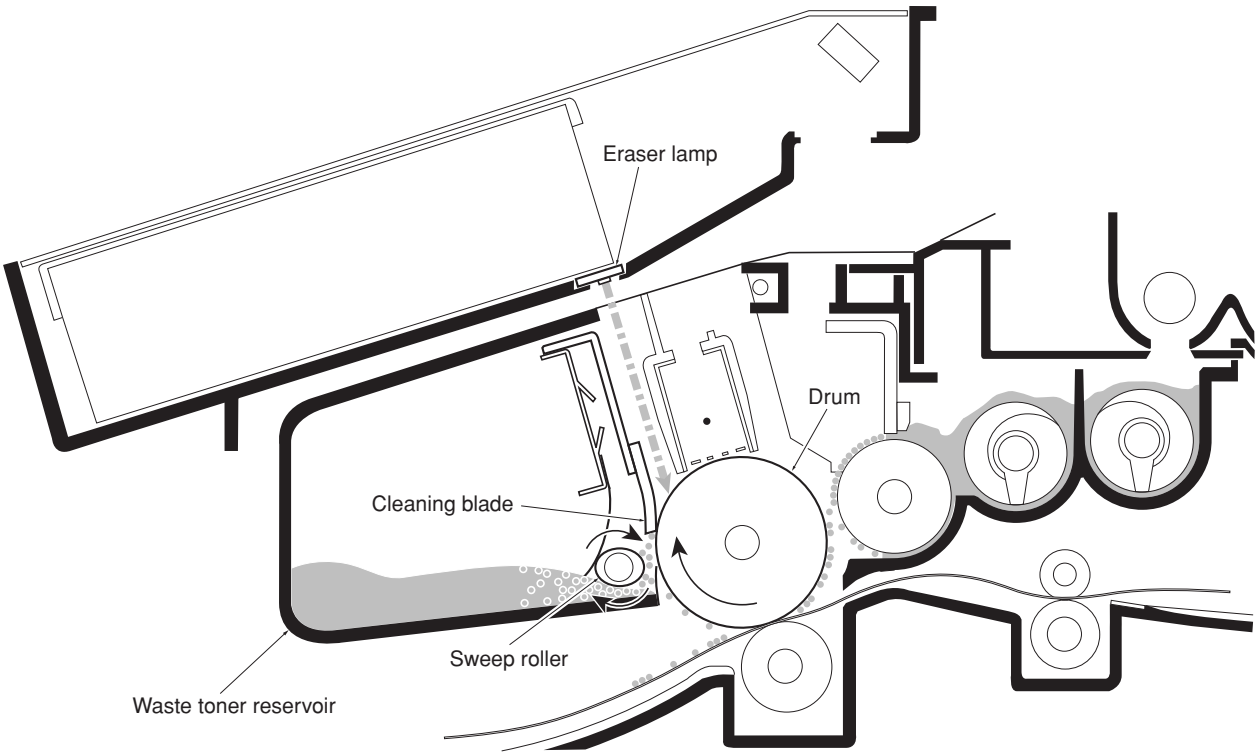

Figure 2-1-18 Drum cleaning and erasing static charge

After the drum is physically cleaned, it then must be cleaned to the electrically neutral state. This is necessary to erase any residual positive charge, ready to accept the uniform charge for the next print process. The residual charge is canceled by exposing the drum to the light emitted from the eraser lamp. This lowers the electrical conductivity of the drum surface making the residual charge on the drum surface escape to the ground.

TONER
www.tonerplus.com.ua

2-2-1 Electrical parts layout

(1) Main unit

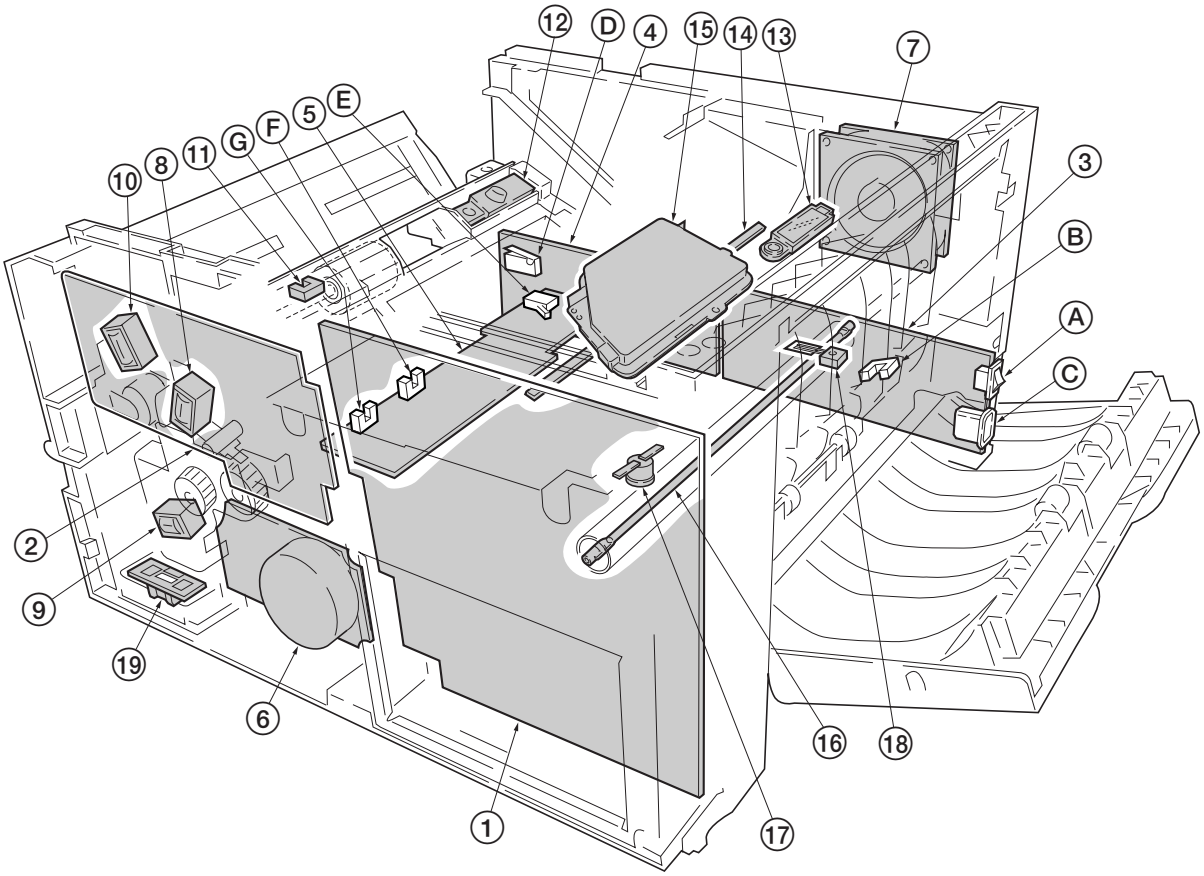

Figure 2-2-1 Main unit

① Main PWB
② Engine PWB
③ Power supply PWB
  Ⓐ Power switch
  Ⓑ Exit sensor
  Ⓒ AC Inlet
④ High voltage PWB
  Ⓓ Interlock switch
⑤ Bias PWB
  Ⓔ Cassette switch
  Ⓕ Registration sensor
  Ⓖ Paper sensor
⑥ Main motor
⑦ Cooling fan
⑧ Registration clutch
⑨ Feed clutch
⑩ MP feed clutch
⑪ MP paper sensor
⑫ Toner sensor [PWB]
⑬ Waste toner sensor [PWB]
⑭ Eraser lamp [PWB]
⑮ Laser scanner unit
⑯ Heater lamp
⑰ Thermal cutout
⑱ Thermistor
⑲ Paper feeder interface connector

TONER
www.tonerplus.com.ua

(2) Scanner unit

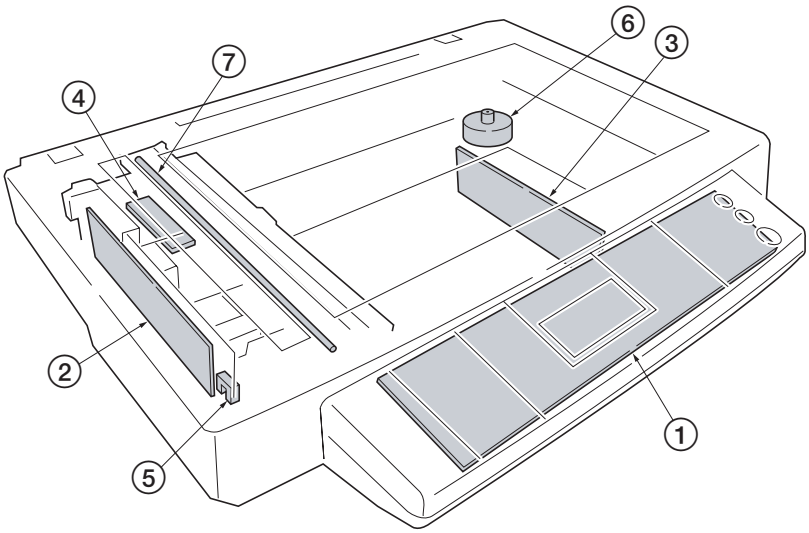

Figure 2-2-2 Scanner unit

① Operation PWB
② CCD PWB
③ Scanner PWB
④ Inverter PWB
⑤ Scanner home position sensor
⑥ Scanner motor
⑦ Exposure lamp

TONER
www.tonerplus.com.ua

2-3-1 Main PWB

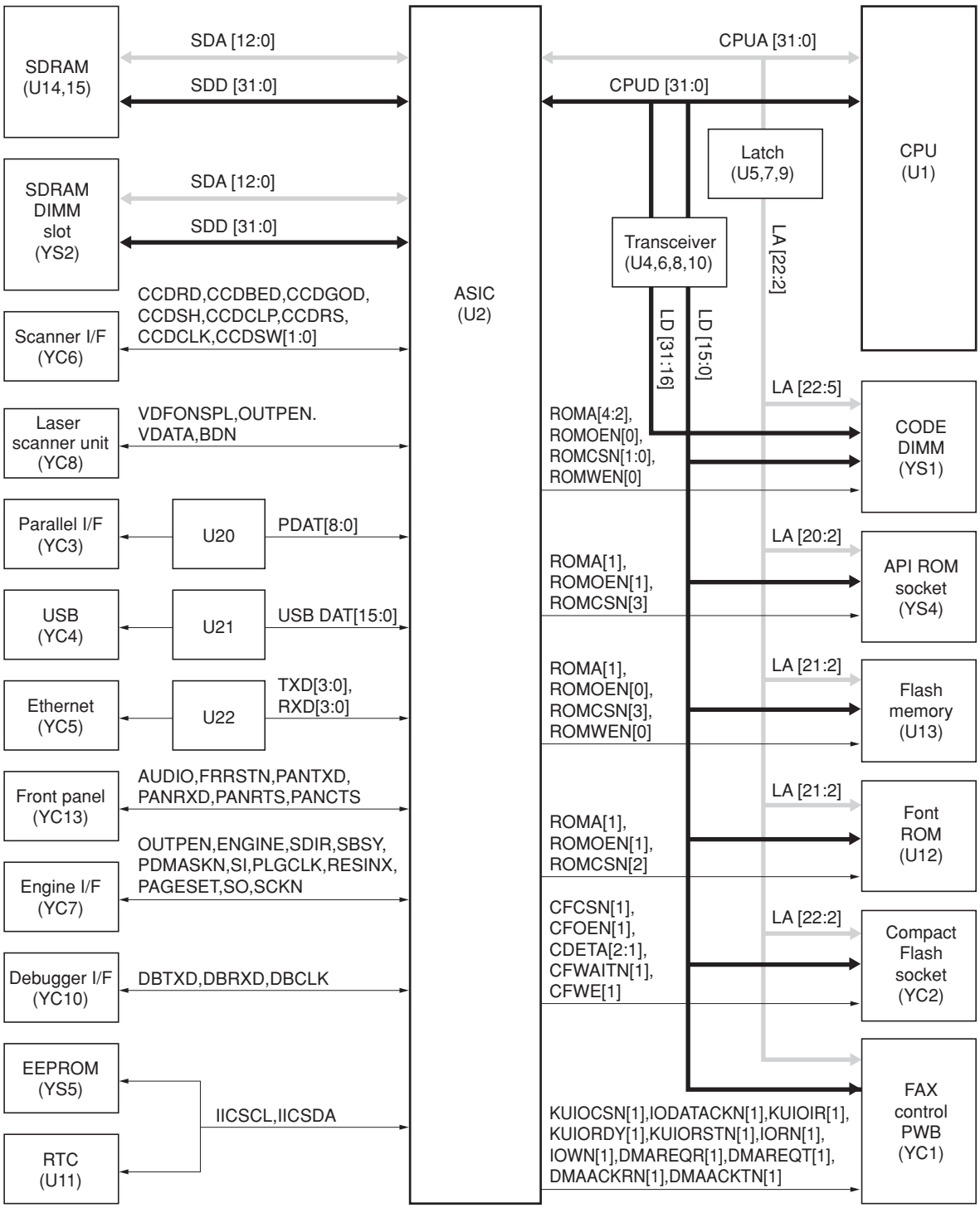

Figure 2-3-1 Main PWB circuit block diagram

TONER
www.tonerplus.com.ua

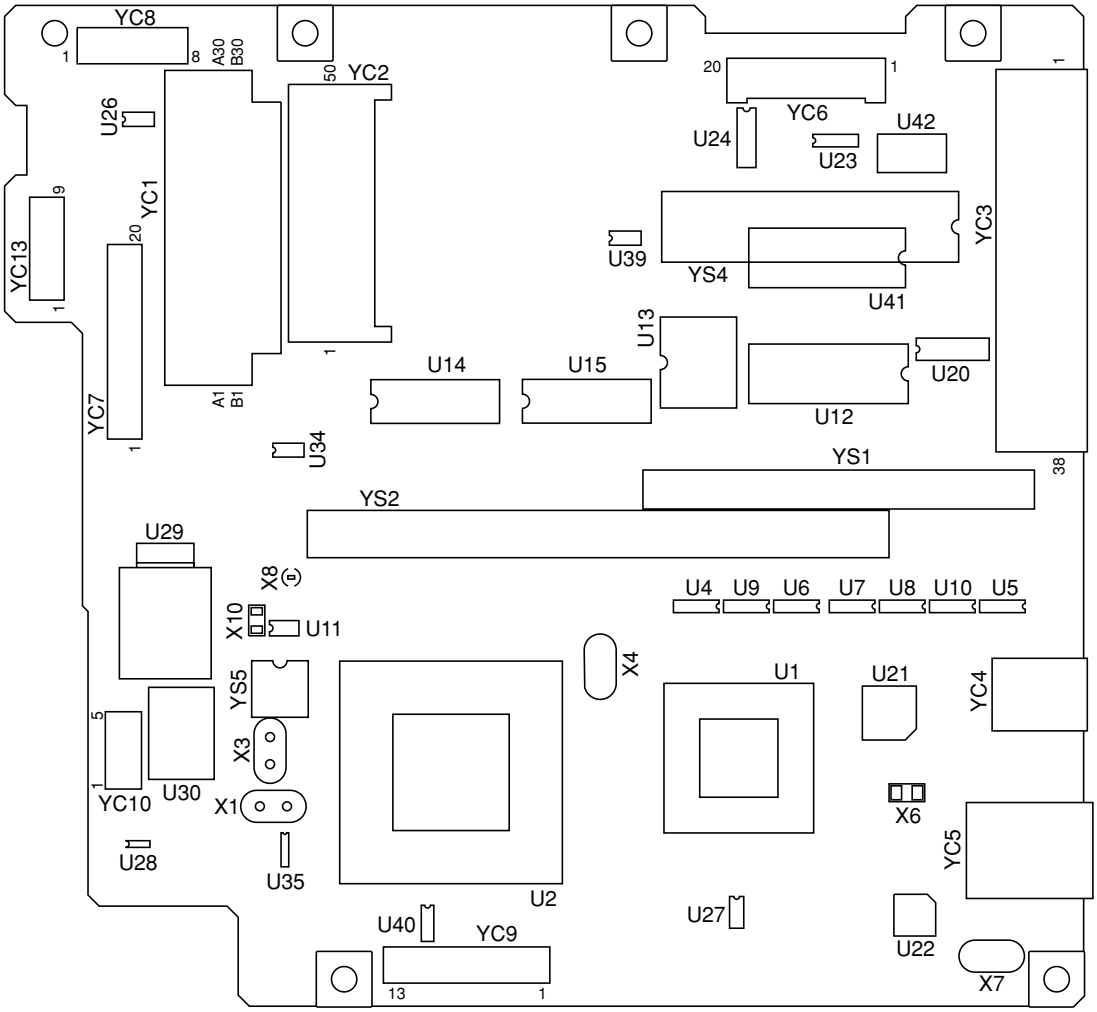

Figure 2-3-2 Main PWB silk-screen diagram

TONER
www.tonerplus.com.ua

Connector	Pin No.	Signal	I/O	Description
YC1	A1	NC	-	Not used
Connected to the FAX control PWB	A2	NC	-	Not used
	A3	AUDIO	I	AUDIO signal
	A4	+3.3 V	O	3.3 V DC power supply
	A5	GND	-	Ground
	A6	A13	O	Address bus A13
	A7	A11	O	Address bus A11
	A8	A9	O	Address bus A9
	A9	GND	-	Ground
	A10	A6	O	Address bus A6
	A11	A4	O	Address bus A4
	A12	A2	O	Address bus A2
	A13	GND	-	Ground
	A14	OP2IFn	O	OP2IF signal
	A15	OP2IRn	I	OP2IR signal
	A16	RDY	O	Ready signal
	A17	GND	-	Ground
	A18	IORn	O	IOR signal
	A19	RESETn	O	Reset signal
	A20	D15	O	Data bus D15
	A21	GND	-	Ground
	A22	D12	O	Data bus D12
	A23	D10	O	Data bus D10
	A24	D8	O	Data bus D8
	A25	GND	-	Ground
	A26	D5	O	Data bus D5
	A27	D3	O	Data bus D3
	A28	D1	O	Data bus D1
	A29	GND	-	Ground
	A30	NC	-	Not used
	B1	NC	-	Not used
	B2	TXDREQ	I	TXDREQ signal
	B3	+3.3 V	O	3.3 V DC power supply
	B4	A15	O	Address bus A15
	B5	A14	O	Address bus A14
	B6	A12	O	Address bus A12
	B7	A10	O	Address bus A10
	B8	A8	O	Address bus A8
	B9	A7	O	Address bus A7
	B10	A5	O	Address bus A5
	B11	A3	O	Address bus A3
	B12	A1	O	Address bus A1
	B13	+3.3 V	O	3.3 V DC power supply
	B14	OP2ACKn	I	OP2ACK signal
	B15	+5 V	O	5 V DC power supply
	B16	RXDREQ	I	RXDREQ signal
	B17	RXDMACKn	O	RXDMACK signal
	B18	IOWn	O	IOW signal
	B19	TXDMACKn	O	TXDMACK signal
	B20	D14	O	Data bus D14
	B21	D13	O	Data bus D13
	B22	D11	O	Data bus D11
	B23	D9	O	Data bus D9
	B24	D7	O	Data bus D7
	B25	D6	O	Data bus D6
	B26	D4	O	Data bus D4
	B27	D2	O	Data bus D2
	B28	D0	O	Data bus D0
	B29	NC	-	Not used
	B30	NC	-	Not used

TONER
www.tonerplus.com.ua

Connector	Pin No.	Signal	I/O	Description
YC2	1	GND	-	Ground
Connected to the compact flash socket	2	D3	O	Data bus D3
	3	D4	O	Data bus D4
	4	D5	O	Data bus D5
	5	D6	O	Data bus D6
	6	D7	O	Data bus D7
	7	CE1n	O	CE1 signal
	8	A10	O	Address bus A10
	9	OEn	O	OE signal
	10	A9	O	Address bus A9
	11	A8	O	Address bus A8
	12	A7	O	Address bus A7
	13	VCC	O	3.3 V DC power supply
	14	A6	O	Address bus A6
	15	A5	O	Address bus A5
	16	A4	O	Address bus A4
	17	A3	O	Address bus A3
	18	A2	O	Address bus A2
	19	A1	O	Address bus A1
	20	A0	O	Address bus A0
	21	D0	O	Data bus D0
	22	D1	O	Data bus D1
	23	D2	O	Data bus D2
	24	WP	-	Not used
	25	CD2n	I	CD2 signal
	26	CD1n	I	CD1 signal
	27	D11	O	Data bus D11
	28	D12	O	Data bus D12
	29	D13	O	Data bus D13
	30	D14	O	Data bus D14
	31	D15	O	Data bus D15
	32	CE2n	O	CE2 signal
	33	VS1n	O	VS1 signal
	34	IORDn	O	IORD signal
	35	IOWRn	O	IOWR signal
	36	WEn	O	WE signal
	37	RDY/BSYn	-	Not used
	38	VCC	O	3.3 V DC power supply
	39	CSELn	O	CSEL signal
	40	VS2n	-	Not used
	41	RESET	O	Reset signal
	42	WAITn	I	WAIT signal
	43	INPACKn	-	Not used
	44	REGn	O	REG signal
	45	BVD2n	-	Not used
	46	BVD1n	-	Not used
	47	D8	O	Data bus D8
	48	D9	O	Data bus D9
	49	D10	O	Data bus D10
	50	GND	-	Ground
YC3	1	STB	I	STB signal
Connected to the parallel I/F	2	DATA1	I	DATA1 signal
	3	DATA2	I	DATA2 signal
	4	DATA3	I	DATA3 signal
	5	DATA4	I	DATA4 signal
	6	DATA5	I	DATA5 signal
	7	DATA6	I	DATA6 signal
	8	DATA7	I	DATA7 signal
	9	DATA8	I	DATA8 signal
	10	ACK	O	ACK signal
	11	BUSY	O	BUSY signal

TONER
www.tonerparts.com

Connector	Pin No.	Signal	I/O	Description
YC3	12	PE	O	Paper empty signal
Connected to the parallel I/F	13	SEL	O	Select signal
	14	CAN	I	CAN signal
	15	RMR	-	Not used
	16	SG	-	Ground
	17	FG	-	Ground
	18	INIT	O	5 V DC power supply
	19	GND	-	Ground
	20	GND	-	Ground
	21	GND	-	Ground
	22	GND	-	Ground
	23	GND	-	Ground
	24	GND	-	Ground
	25	GND	-	Ground
	26	GND	-	Ground
	27	GND	-	Ground
	28	GND	-	Ground
	29	GND	-	Ground
	30	ARARM	-	Ground
	31	ASFON	-	Not used
	32	FAULT	O	FAULT signal
	33	HSTI	-	Not used
	34	EXPRM	-	Not used
	35	PRDY	O	Power ready signal
	36	SELI	-	Not used
YC4	1	VBUS	I	VBUS signal
Connected to the USB	2	DATA-	O	DATA- signal
	3	DATA+	O	DATA+ signal
	4	GND	-	Ground
YC5	1	TXOP	O	TXOP signal
Connected to the Ethernet	2	+3.3 V	O	3.3 V DC power supply
	3	TXON	O	TXON signal
	4	RXIP	I	RXIP signal
	5	+3.3 V	O	3.3 V DC power supply
	6	RXIN	I	RXIN signal
	7	NC	-	Not used
	8	GND	-	Ground
	9	+3.3 V	O	3.3 V DC power supply
	10	/LEDL	I	LEDL signal
	11	+3.3 V	O	3.3 V DC power supply
	12	LEDN	I	LEDN signal
YC6	1	SHRGB	O	RGB shift signal
Connected to the scanner PWB	2	SW	O	Color/monochro control signal
	3	SWN	O	Color/monochro control signal
	4	CCDCLKN	O	CCD clock signal
	5	GND	-	Ground
	6	CCDCLK	O	CCD clock signal
	7	GND	-	Ground
	8	RSN	O	CCD RS signal
	9	GND	-	Ground
	10	CPN	O	CCD CP signal
	11	GND	-	Ground
	12	SH	O	CCD shift signal
	13	GND	-	Ground
	14	GND	-	Ground
	15	GND	-	Ground
	16	CCDG(O)	I	Image data G (green) signal (analog)
	17	GND	-	Ground
	18	CCDB(E)	I	Image data B (blue) signal (analog)

TONER
www.tonerplus.com

Connector	Pin No.	Signal	I/O	Description
YC6	19	GND	-	Ground
Connected to the scanner PWB	20	CCDR	I	Image data R (red) signal (analog)
YC7	1	SGND	-	Ground
Connected to the engine PWB	2	SGND	-	Ground
	3	+3.3 V	I	3.3 V DC power supply
	4	+3.3 V	I	3.3 V DC power supply
	5	+5 V	I	5 V DC power supply
	6	OUTPEN	I	OUTPEN signal
	7	SGND	-	Ground
	8	PLGCLK	O	PLGCLK signal
	9	EGSO	I	EGSO signal
	10	SCKN	O	SCKN signal
	11	EGSI	O	EGSI signal
	12	PDMASKN	I	PDMASKN signal
	13	SBSY	I	SBSY signal
	14	SDIR	I	SDIR signal
	15	EGRN	I	EGRN signal
	16	SGND	-	Ground
	17	RSTN	I	RSTN signal
	18	SGND	-	Ground
	19	OVSYNC	I	OVSYNC signal
	20	SGND	-	Ground
YC8	1	SGND	-	Ground
Connected to the laser scanner unit	2	SAMPLEN	O	SAMPLEN signal
	3	VDATA	O	VDATA signal
	4	OUTPEN	O	OUTPEN signal
	5	SGND	-	Ground
	6	+5 V	O	5 V DC power supply
	7	SGND	-	Ground
	8	PDN	I	Horizontal synchronization signal
YC10	1	+5 V	O	5 V DC power supply
Connected to the debugger I/F	2	DBTXD	O	DBTXD signal
	3	DBRXD	I	DBRXD signal
	4	DBCLK	I	DBCLK signal
	5	GND	-	Ground
YC13	1	SGND	-	Ground
Connected to the scanner PWB	2	AUDIO	O	AUDIO signal
	3	+5 V	O	5 V DC power supply
	4	FPRSTN	O	FPRSTN signal
	5	PANTXD	O	PANTXD signal
	6	PANRXD	I	PANRXD signal
	7	PANRTS	O	PANRTS signal
	8	PANCTS	I	PANCTS signal
	9	+3.3 V	O	3.3 V DC power supply

TONER
www.tonerplus.com.ua

2-3-2 Engine PWB

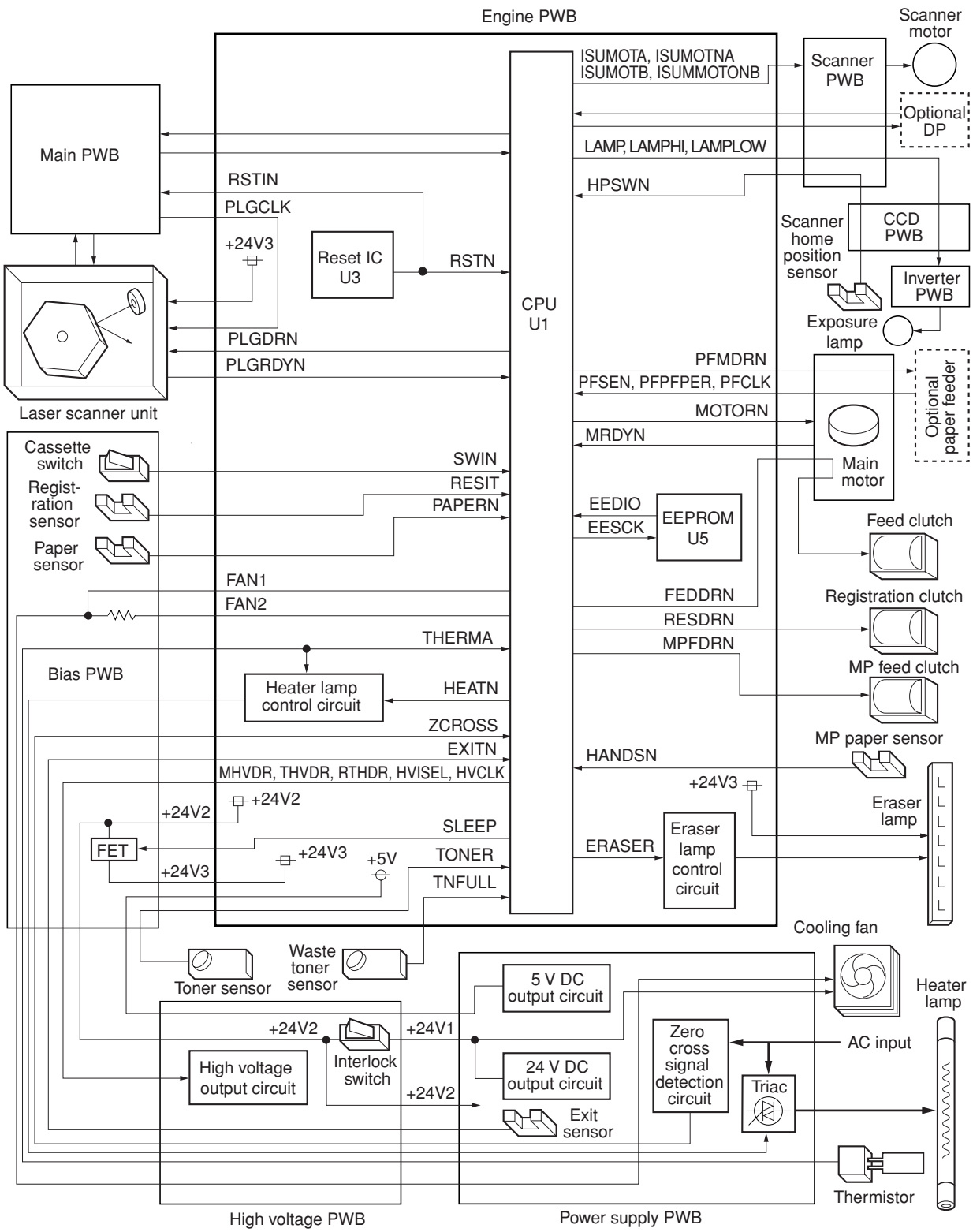

Figure 2-3-3 Engine PWB circuit block diagram

TONER
www.tonerplus.com.ua

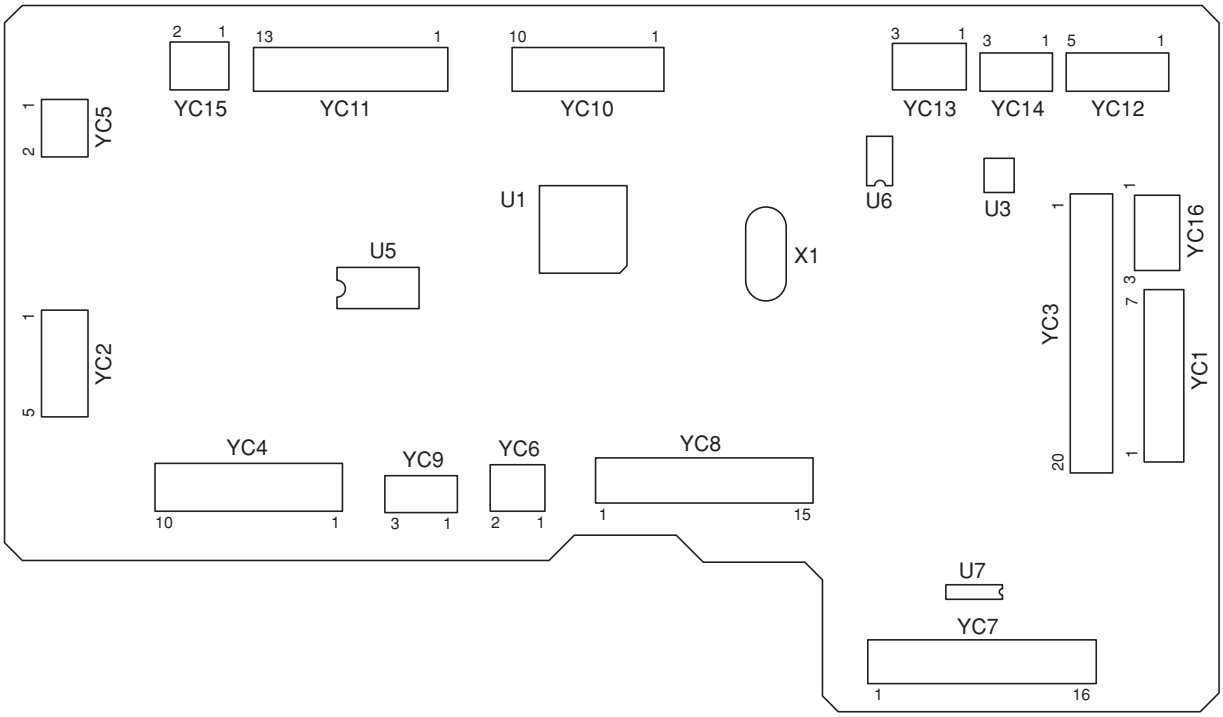

Figure 2-3-4 Engine PWB silk-screen diagram

TONER
www.tonerplus.com.ua

(1) Eraser lamp control circuit

The CPU (U1) turns pin #86 (ERASER) of U1 to H level, transistors (Q18) turns on consequently, and the 24 V DC given at pin #1 of connector YC14 applies to the eraser lamps. The eraser lamps thus illuminate as the current flows through the eraser lamp, the pin #2 of connector YC14, resistors (R109, R110, and R111), transistor Q18 and the ground.

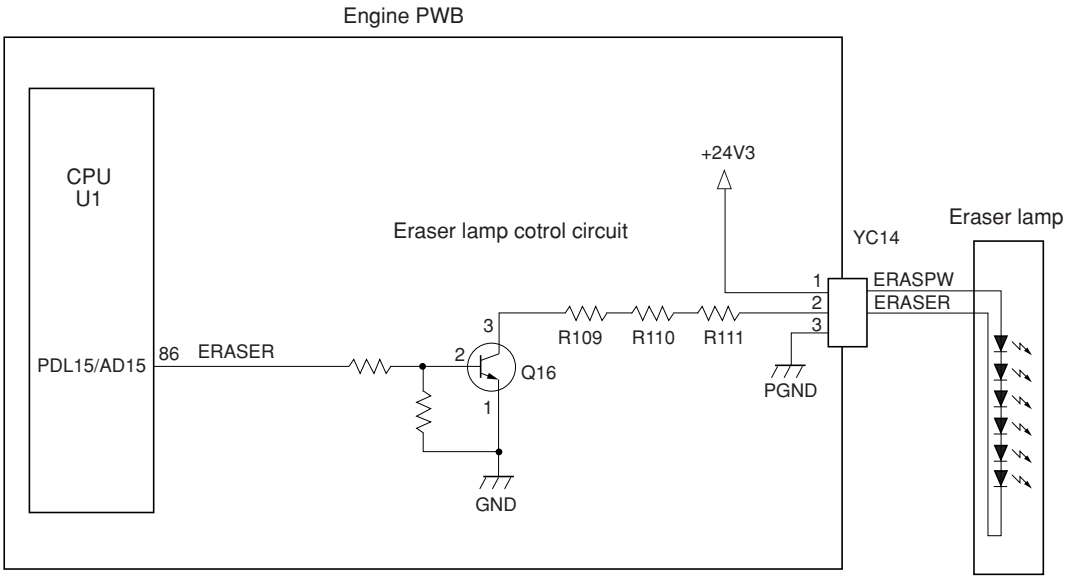

Figure 2-3-5 Eraser lamp control circuit

TONER
www.tonerplus.com.ua

(2) Heater lamp control circuit

Activation of the heater lamp is dominated by the HEAT signal which is derived by the engine CPU (U1) at its pin #74. When its level is high, transistor Q8 turns on, photo-triac PC2 and triac TRC1 turn on simultaneously, and the heater lamp is applied with the primary AC voltage in turn.

Switching of triac TRC1, as affected by the HEAT signal is made in synchronization with the zero-cross signal ZCROSS which is generated by the power supply unit. The zero-cross signal detector watches the transition of alternating plus and negative current and detects the zero crosses. This detector derives the resultant ZCROSS signal at its pin #20 of the engine CPU (U1). Since abrupt change in the current flow can be significantly avoided by synchronizing triac TRC1 with the zero-cross signal, the possibility of noise due to the primary AC supply is greatly reduced.

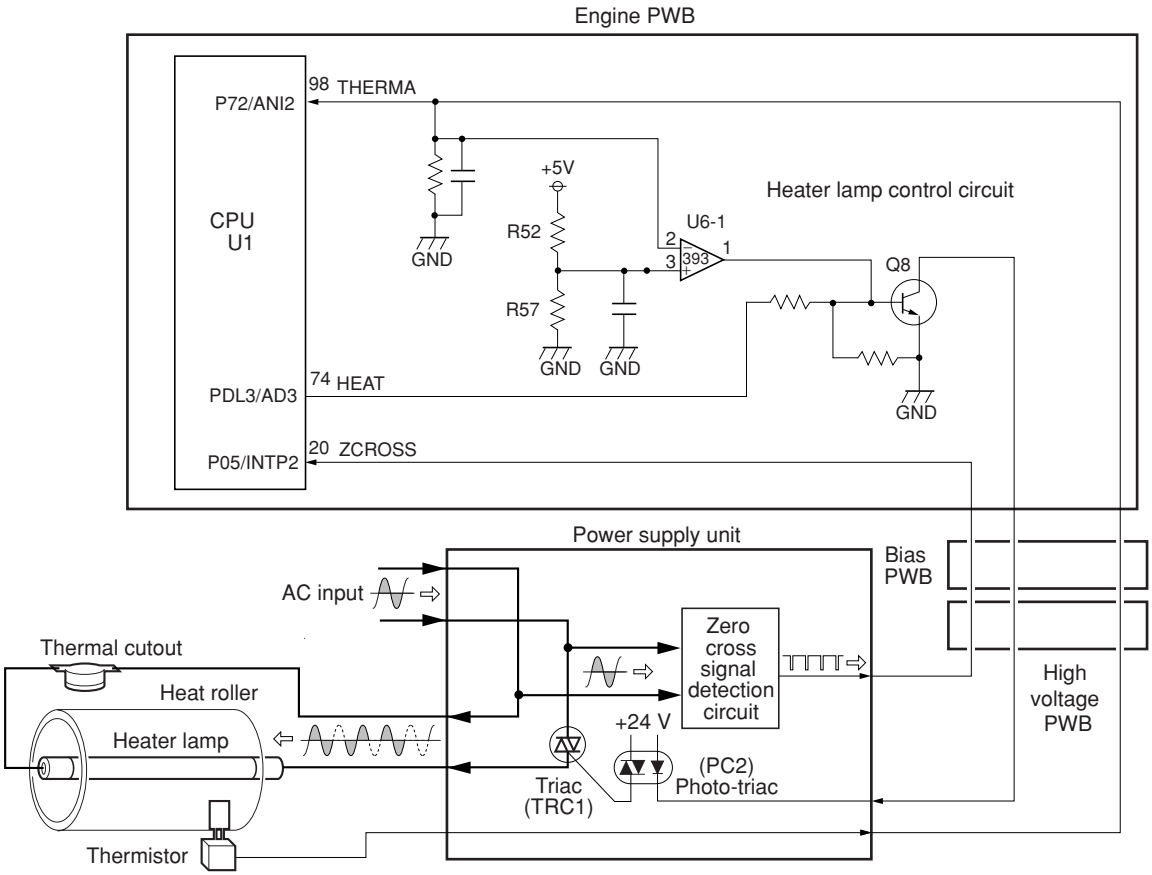

Figure 2-3-6 Heater lamp control circuit

TONER
www.tonerplus.com.ua

The AC power for the heater is applied in one of the five variations of the zero cross switchings as shown in Figure 2-3-7. Each variation is constituted with the unit of ten positive and negative envelops in five cycles, as obtained by varying the duration during which TRC1 turns on. The heater lamp is energized while TRC1 is kept on; the heater lamp is turned off while TRC1 is kept off. For example, the duty cycle (the period of a cycle during which the heater lamp is turned on) is maximum for variation No.1 as the heater lamp is energized for the whole envelops. The duty cycle is 60 % for variation No.3 as the heater lamp is energized for the 6 positive and negative envelops out of 10. The duty cycle is 0 since the heater lamp is kept turned off for the whole envelops.

CPU (U1) selectively switches among those variations for applying voltages to the heater lamp according to the THERMA signal which appears at pin #98 as feedback.

A fraction of THERMA is applied to pin #2 of comparator U6-1. The comparator maintains comparison of the potential at pin #2 and pin #3 which gives a reference for the possible anomaly in the heater temperature (bred by resistors R52 and R57). Should the voltage at pin #2 exceed that at pin #98, the level at pin #1 becomes low. Since pin #1 is wired to the output line for the HEAT signal, the HEAT signal is enforced to be low regardless the behavior of CPU (U1), thus preventing possible heat overrun.

TONER
www.tonerplus.com.ua

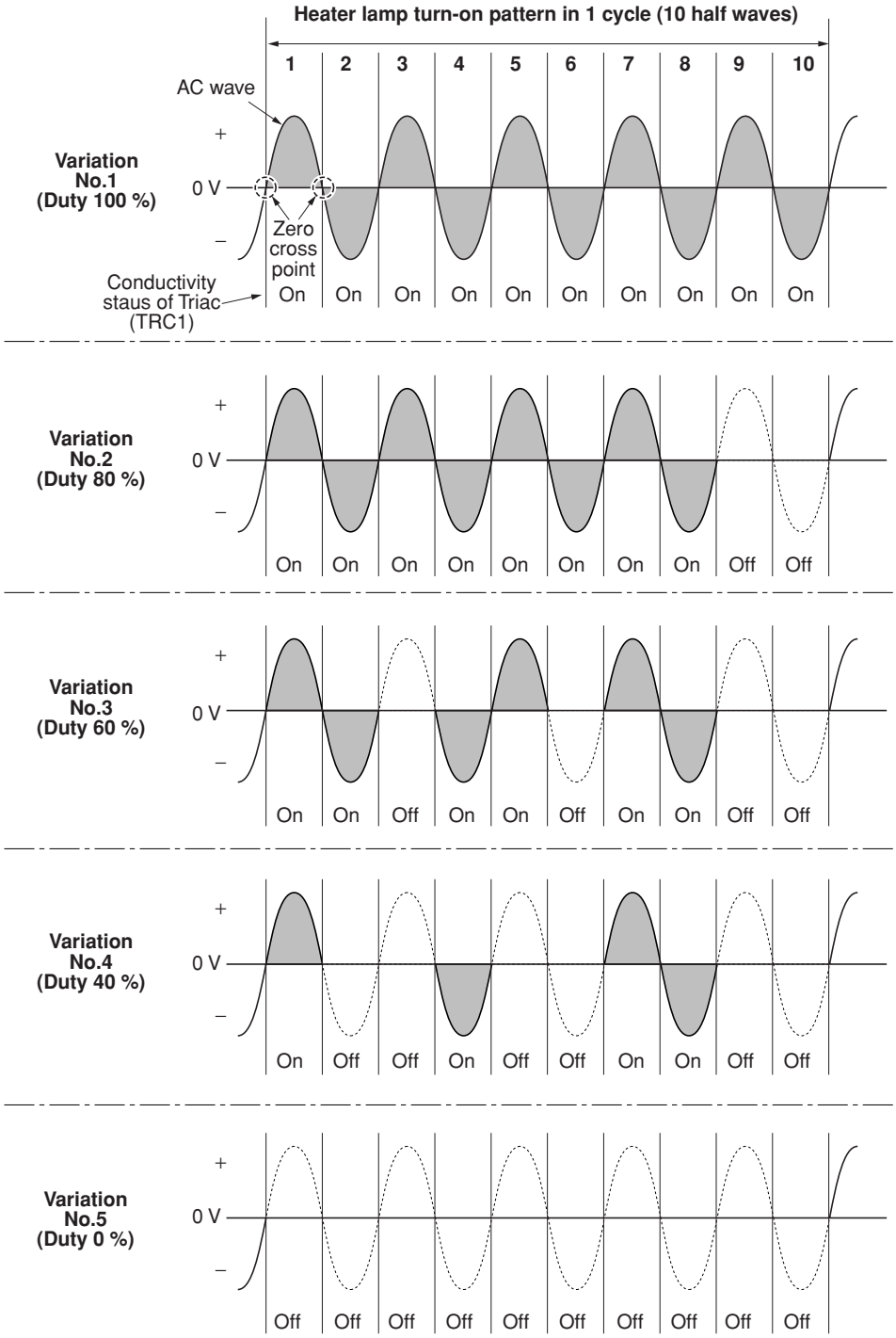

Figure 2-3-7 Heater lamp turn-on variations

TONER
www.tonerplus.com.ua

(3) Polygon motor control circuit

The main controller PWB supplies the 2598.4 Hz clock pulse (PLGCLK) via the engine PWB to the PLL control IC (IC1) for the polygon motor. To begin printing, the engine CPU U1 turns PLGDR to H level, the PLL control IC (IC1) starts to revolve the polygon motor so that the revolution is 25,984 rpm which depends on the PLGCLK clock pulse. When PLL control IC (IC1) finds that the polygon motor is revolving at the rated speed, turns PLGDRN to L level to acknowledge the engine CPU that the rated speed has been achieved.

On the contrary, if PLGRDYN does not turn to L level within 8 seconds since PLGDRN has been L level.

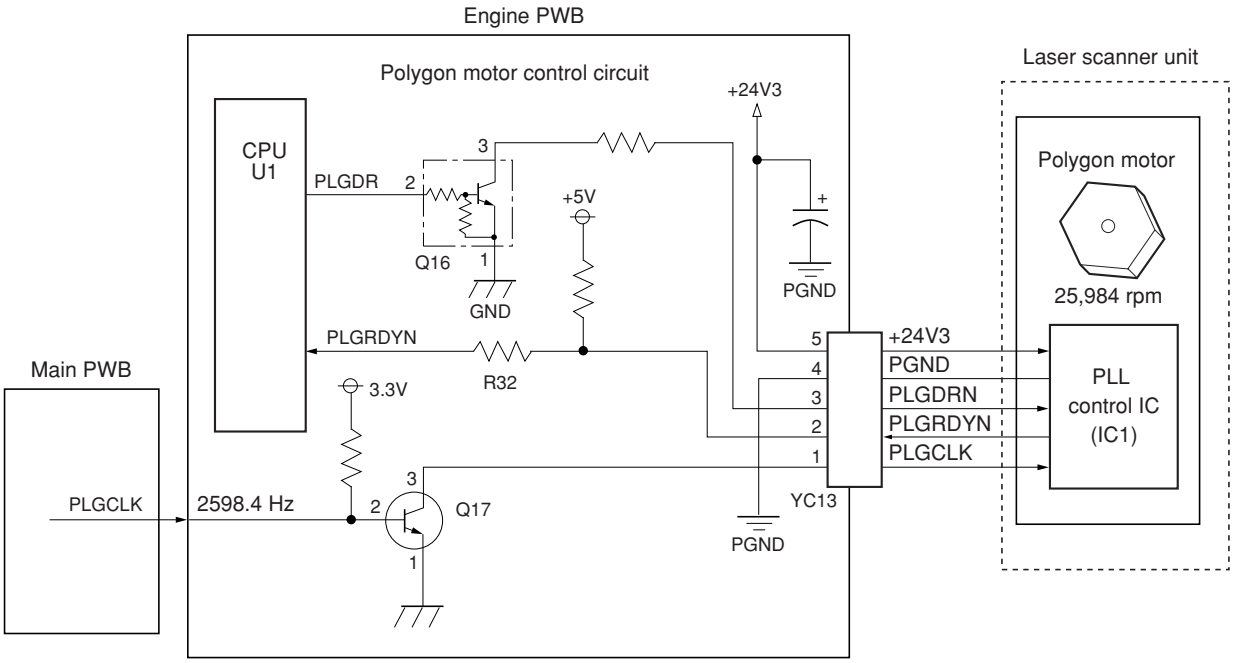

Figure 2-3-8 Polygon motor control circuit

TONER
www.tonerplus.com.ua

Connector	Pin No.	Signal	I/O	Description
YC3	1	SGND	-	Ground
Connected to the main PWB	2	OVSYNK	O	OVSYNK signal
	3	SGND	-	Ground
	4	RSTN	O	RSTN signal
	5	SGND	-	Ground
	6	EGRN	O	EGRN signal
	7	SDIR	O	SDIR signal
	8	SBSY	O	SBSY signal
	9	PDMASKN	O	PDMASKN signal
	10	EGSI	I	EGSI signal
	11	SCKN	I	SCKN signal
	12	EGSO	O	EGSO signal
	13	PLGCLK	I	PLGCLK signal
	14	SGND	-	Ground
	15	OUTPEN	O	OUTPEN signal
	16	+5 V	O	5 V DC power supply
	17	+3.3 V	O	3.3 V DC power supply
	18	+3.3 V	O	3.3 V DC power supply
	19	SGND	-	Ground
	20	SGND	-	Ground
YC4	1	FEDDRN	O	Feed clutch: On/Off
Connected to the main motor	2	PFSEN	I	Paper feeder control signal
	3	PFPER	I	Paper feeder control signal
	4	PFCLK	O	Paper feeder control signal
	5	PFMDRN	O	Paper feeder control signal
	6	PGND	-	Ground
	7	+5 V	O	5 V DC power supply
	8	MRDYN	I	Main motor ready signal
	9	MOTORN	O	Main motor: On/Off
	10	+24 V3	O	24 V DC power supply
YC5	1	+24 V3	O	24 V DC power supply
Connected to the MP feed clutch	2	MPFDRN	O	MP feed clutch: On/Off
YC6	1	+24 V3	O	24 V DC power supply
Connected to the registration clutch	2	REGDRN	O	Registration clutch: On/Off
YC7	1	HEATN	O	Heater lamp: On/Off
Connected to the bias PWB	2	HVISEL	O	HVISEL signal
	3	+5 V	O	5 V DC power supply
	4	SLEEPS	O	Sleep mode signal: On/Off
	5	SLEEP24	O	Sleep mode signal: On/Off
	6	PSEL1	O	PSEL1 signal
	7	EXITN	I	Exit sensor: On/Off
	8	MHVDR2	O	Main charger grid bias voltage
	9	ZCROSS	I	Zero-cross signal
	10	HVCLK	O	HVCLK signal
	11	+5 V	O	5 V DC power supply
	12	+5 V	O	5 V DC power supply
	13	+5 V	O	5 V DC power supply
	14	SGND	-	Ground
	15	SGND	-	Ground
	16	SGND	-	Ground

TONER
www.tonerplus.com.ua

Connector	Pin No.	Signal	I/O	Description
YC8	1	+24 V3	O	24 V DC power supply
Connected to the bias PWB	2	+24 V3	O	24 V DC power supply
	3	PGND	-	Ground
	4	PGND	-	Ground
	5	PAPERN	I	Paper sensor: On/Off
	6	SWIN	I	Cassette switch: On/Off
	7	RESIT	I	Registration sensor: On/Off
	8	TONEREPY	I	Toner sensor: On/Off
	9	+24 V2	O	24 V DC power supply
	10	MHVDR1	O	Main charger grid bias voltage
	11	FAN2	O	Cooling fan: On/Off
	12	FAN1	O	Cooling fan: On/Off
	13	THVDR	O	Transfer roller bias voltage
	14	THERM	I	Thermistor detection voltage
	15	RTHVDR	O	Separation charger bias voltage
YC9	1	+5 V	O	5 V DC power supply
Connected to the MP paper sensor	2	HANDSN	I	MP paper sensor: On/Off
	3	SGND	-	Ground
YC10	1	TEMP	I	Temperature detection data
Connected to the scanner PWB	2	+5 V	O	5 V DC power supply
	3	SGND	-	Ground
	4	HPSWN	I	Scanner home position sensor: On/Off
	5	DPDETN	I	Optonal DP status: Installed/Not installed
	6	DPTIMSWN	I	DPTSW: On/Off
	7	DPORGSWN	I	OSLSW: On/Off
	8	DPCOVSWIN	I	DPSSW1: On/Off
	9	OPSWIN	I	DPSSW2: On/Off
	10	CCDSLEPN	O	CCD sleep signal
YC11	1	MOTA	O	OCM drive control signal
Connected to the scanner PWB	2	MOTNA	O	OCM drive control signal
	3	MOTB	O	OCM drive control signal
	4	MOTNB	O	OCM drive control signal
	5	DPMOT0	O	OFM drive control signal
	6	DPMOT1	O	OFM drive control signal
	7	SCANMOT0	O	Scanner motor drive control signal
	8	SCANMOT1	O	Scanner motor drive control signal
	9	LAMP	O	Exposure lamp: On/Off
	10	LAMPHI	O	Exposure lamp control signal
	11	LAMPLOW	O	Exposure lamp control signal
	12	PGND	-	Ground
	13	+24 V3	O	24 V DC power supply
YC12	1	+5 V	O	5 V DC power supply
Connected to the waste toner sensor	2	TNFULL	I	Waste toner sensor: On/Off
	3	SGND	-	Ground
YC13	1	PLGCLK	O	Polygon motor rotation clock
Connected to the laser scanner unit	2	PLGRDYN	I	Polygon motor rotation status
	3	PLGDRN	O	Polygon motor: On/Off
	4	PGND	-	Ground
	5	+24 V3	O	24 V DC power supply

TONER
www.tonerplus.com.ua

Connector	Pin No.	Signal	I/O	Description
YC14	1	ERASPW	O	24 V DC power supply
Connected to the eraser lamp	2	ERASERN	O	Eraser lamp: On/Off
	3	PGND	-	Ground

TONER
www.tonerplus.com.ua

2-3-3 Power supply PWB

The power supply PWB provides the AC power input and DC power and outputs. The high voltage bias generator circuit is mounted on a separate PWB. A simplified schematic diagram is shown below.

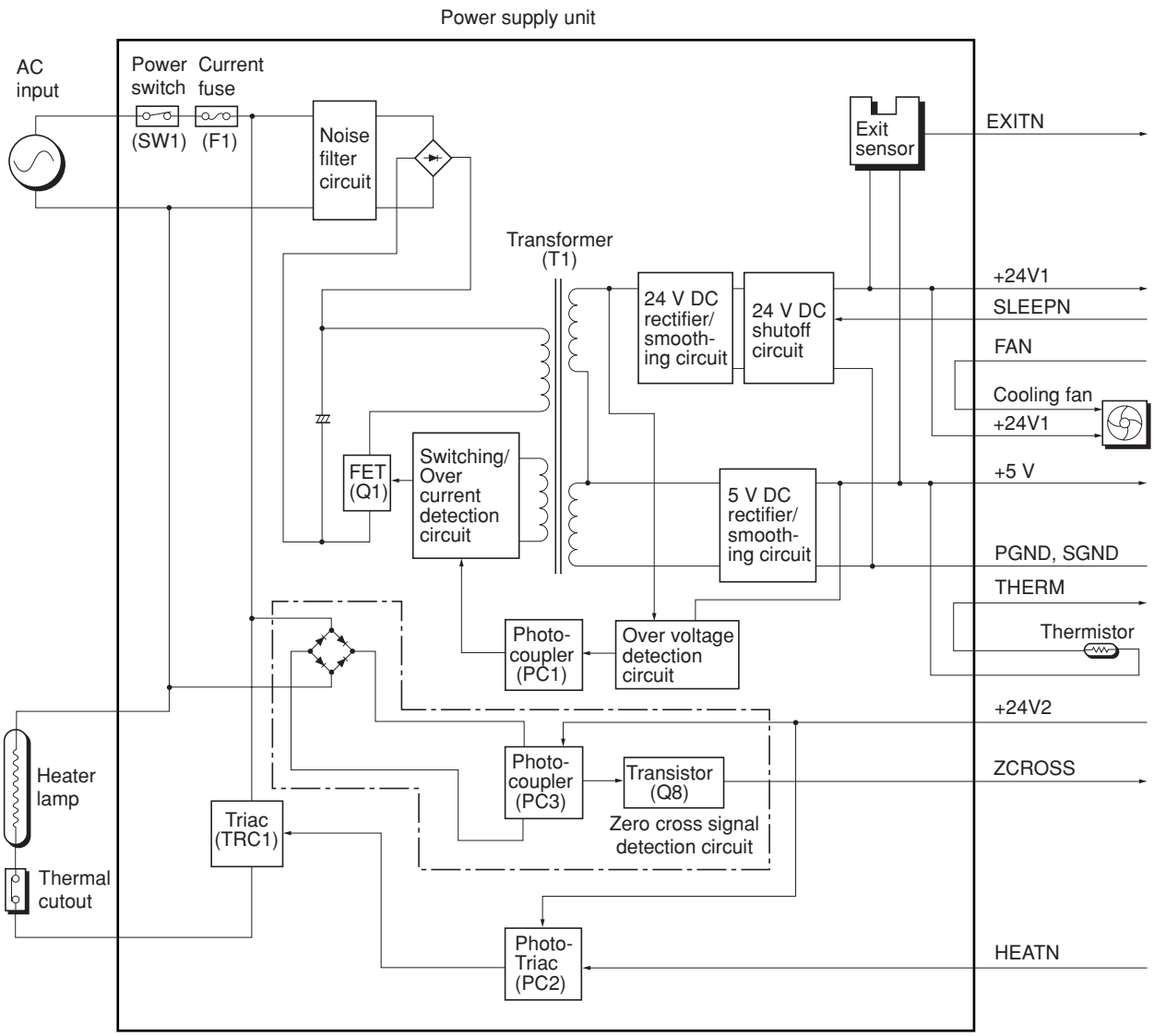

Figure 2-3-9 Power supply PWB circuit block diagram

TONER
www.tonerplus.com.ua

• **100 V**

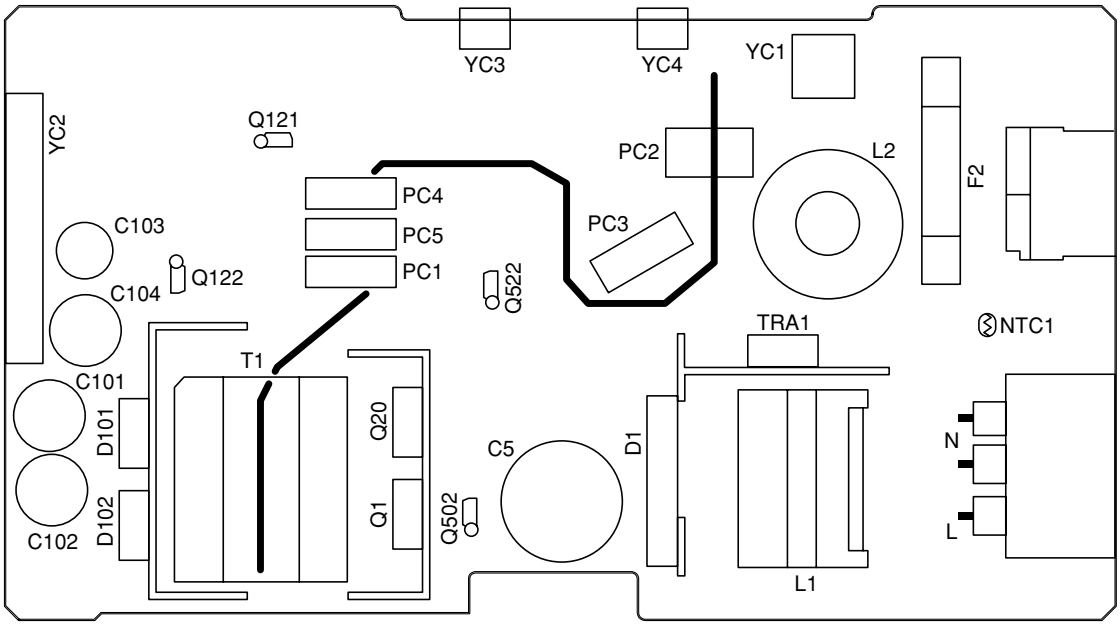

• **200 V**

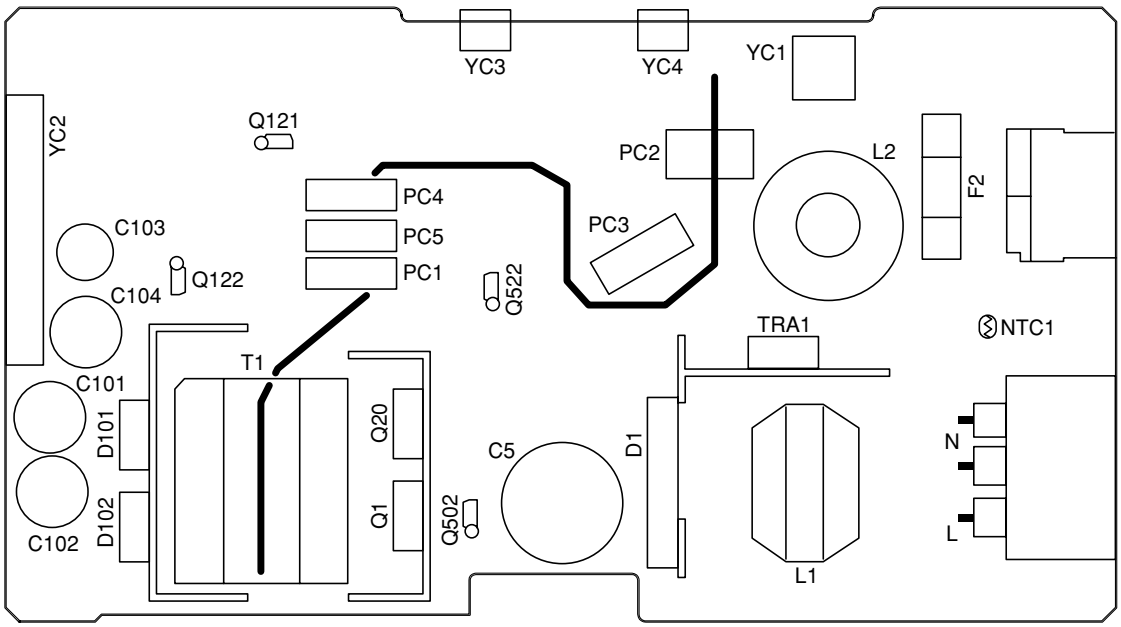

Figure 2-3-10 Power supply PWB silk-screen diagram

TONER
www.tonerplus.com.ua

2-3-4 Bias PWB

The bias PWB contains the developing bias output circuit, registration sensor, paper empty sensor, and the cassette switch. It also provides a liaison connection to the high voltage PWB, power supply, and the toner sensor.

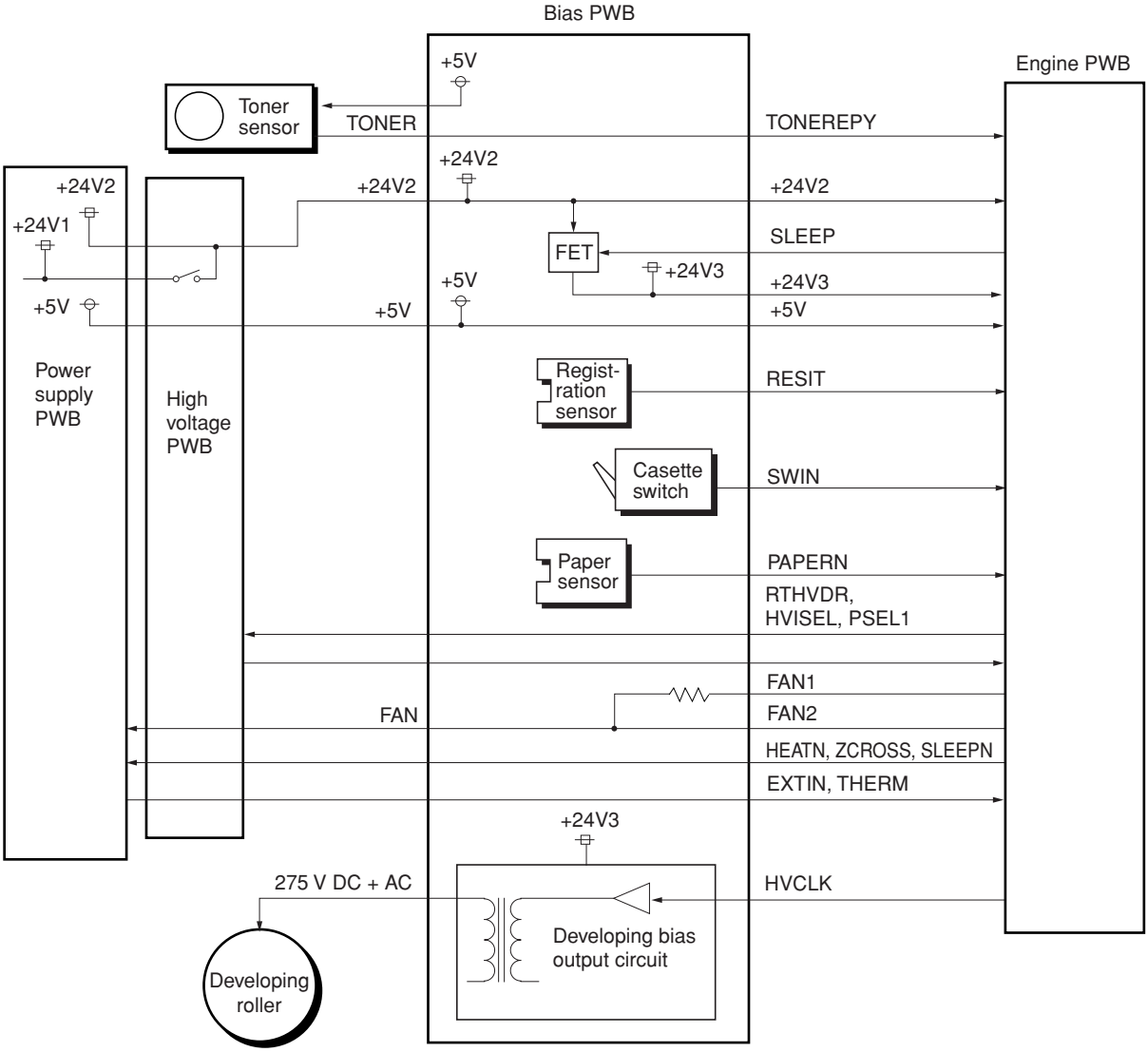

Figure 2-3-11 Bias PWB circuit block diagram

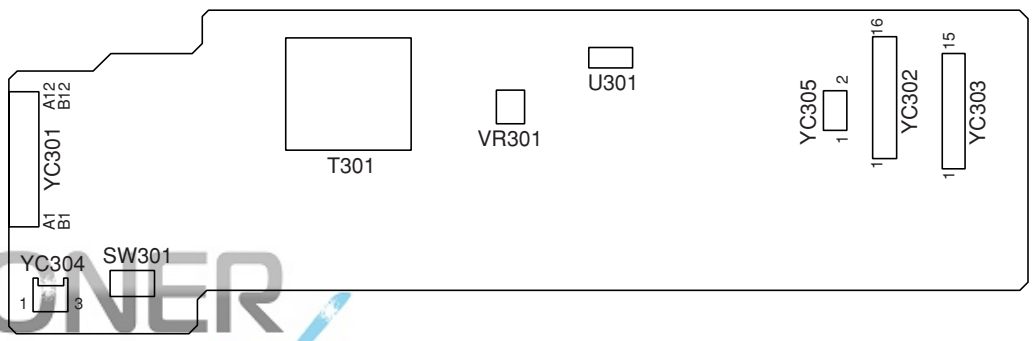

TONER
www.tonerplus.com.ua

Figure 2-3-12 Bias PWB silk-screen diagram

2-3-5 High voltage PWB

The high voltage PWB contains the high voltage output circuit, interlock switch circuit as well as providing a liaison connection with the power supply PWB, bias PWB, and the engine PWB.

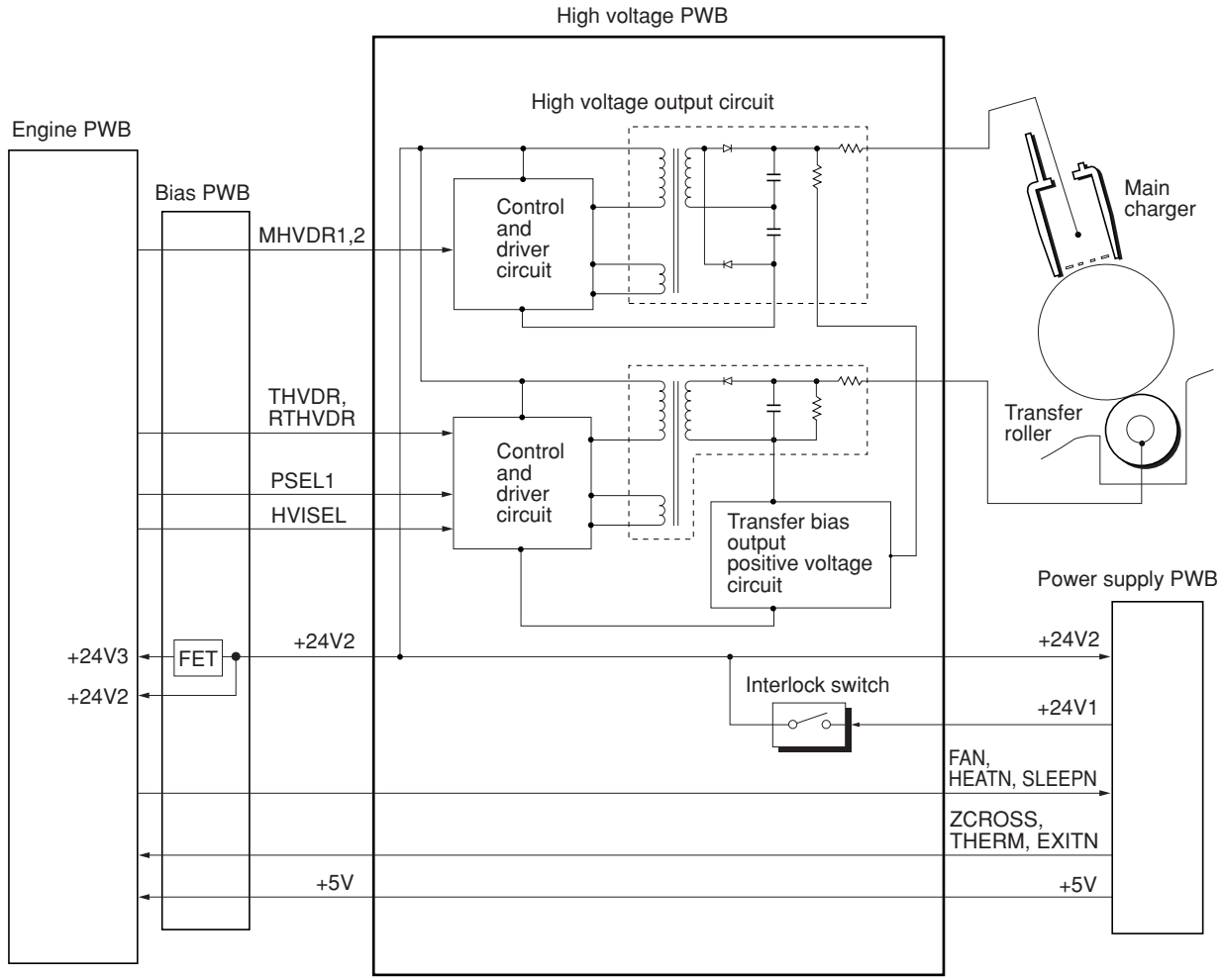

Figure 2-3-13 High voltage PWB circuit block diagram

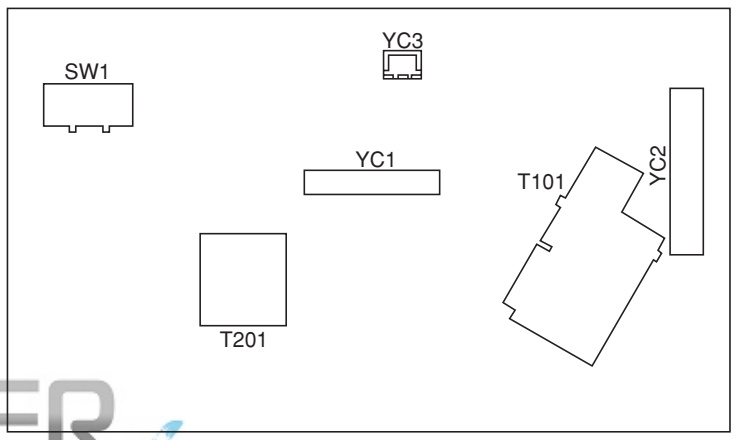

TONER
www.tonerplus.com.ua

Figure 2-3-14 High voltage PWB silk-screen diagram

(1) Interlock switch

The interlock switch is located on the high voltage PWB and opened and closed in conjunction with the front cover or the front top cover via the interlock lever. This switch connects and disconnects the +24 V DC power supply line. If the front cover or the front top cover is open, the interlock switch is open, and the +24 V DC to the high voltage output circuit, bias PWB, engine PWB, and the power supply PWB is disconnected, deactivating the high voltage output, laser output, main motor output for safety. The cooling fan is an exception: Since the cooling fan is directly fed with +24 V DC from the power supply unit at the primary side (+24V1) of the interlock switch, the cooling fan is not deactivated even the cover is open.

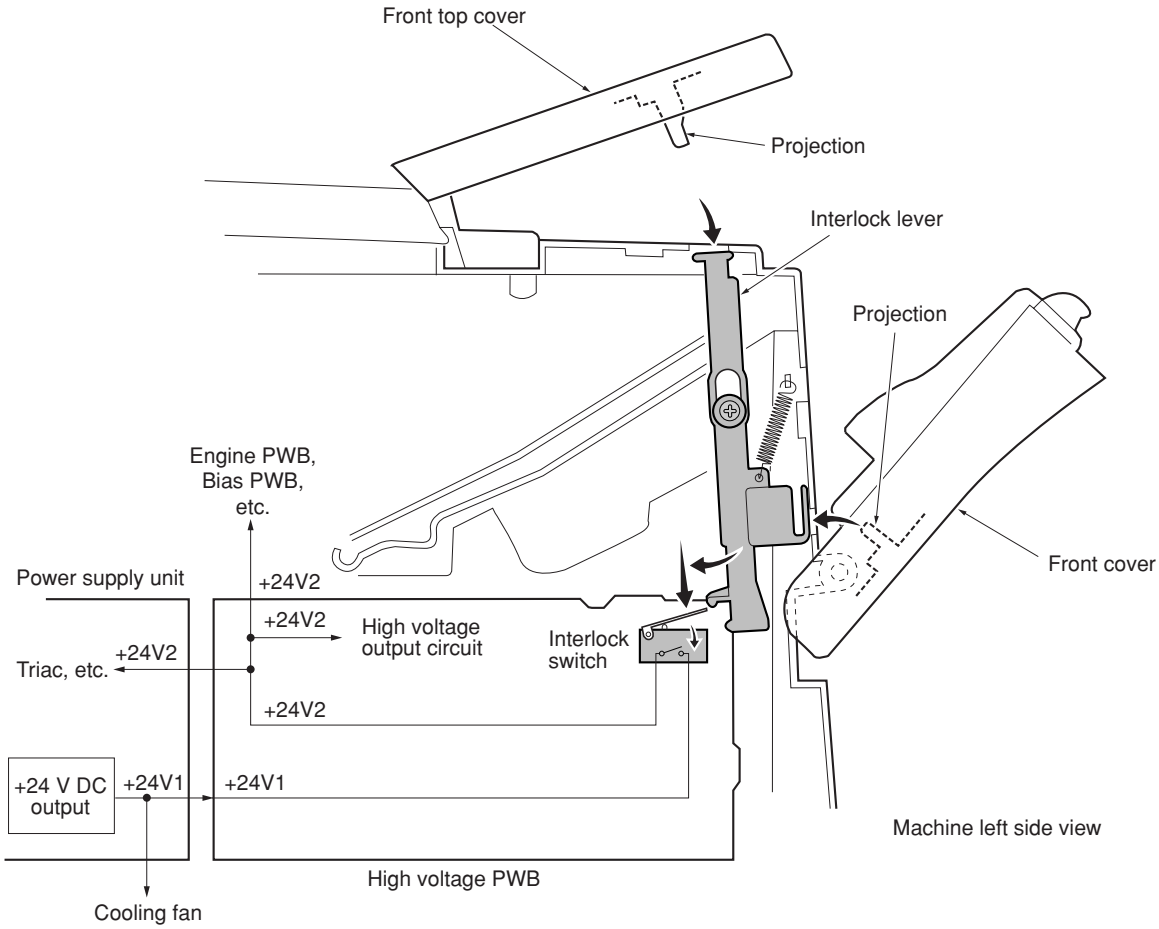

Figure 2-3-15 Interlock switch

TONER
www.tonerplus.com.ua

2-3-6 CCD PWB

The CCD PWB consists mainly of a CCD sensor (U4) that scans an original. The CCD sensor (U4) is driven to scan an original by the CCD sensor control signals (CCDCLKN, SH_BW, SH_RGB, SW, SWN, CPN, and RSN) based on the clock for driving the CCD sensor (CCDCLK) supplied from the main PWB through the scanner PWB.
The image signals obtained from scanning of an original are divided into three analog signals (CCDR2, CCDG2, and CCDB2) for output. These signals are current-amplified by the amplification circuit that consists of operational amplifiers (U6 and U7), and so on and transmitted to the analog signal processing circuit on the main PWB through the scanner PWB. Also the CCD PWB relays signal lines of the scanner home position sensor and the exposure lamp.

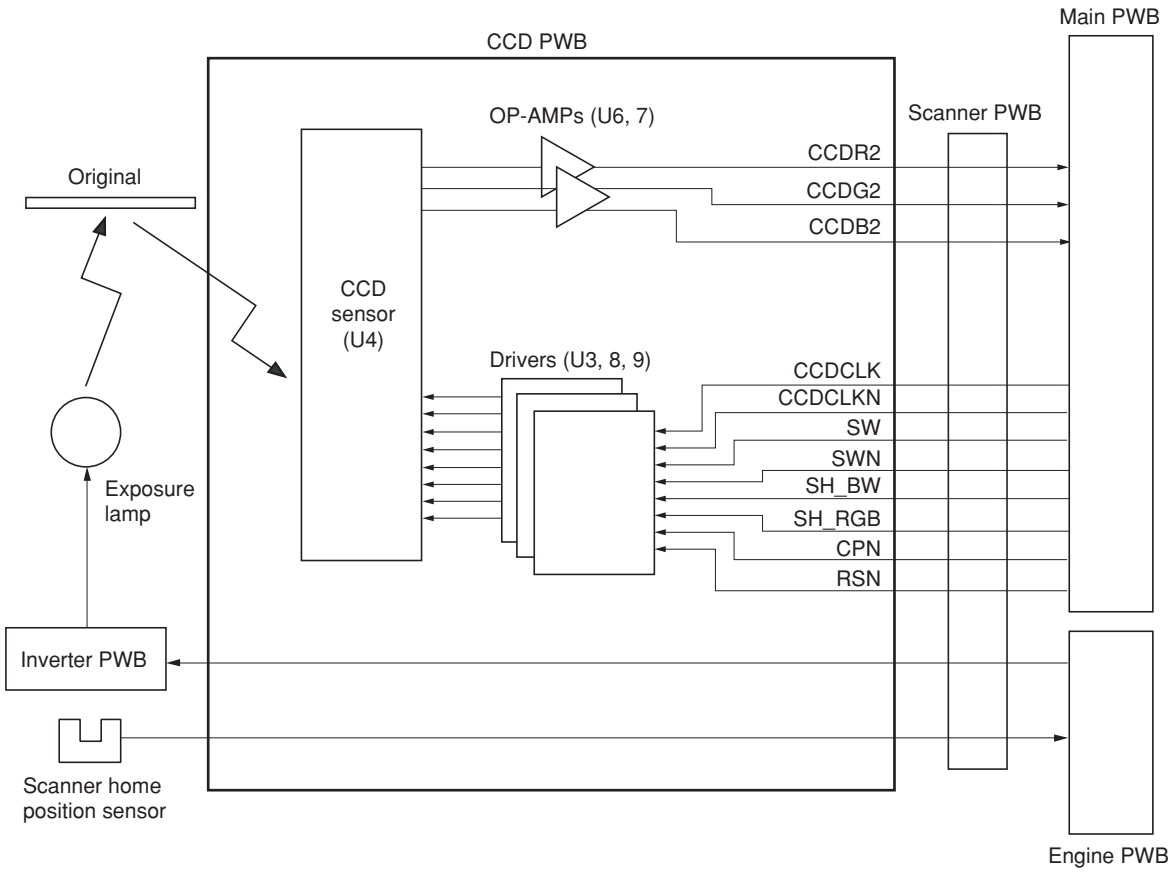

Figure 2-3-16 CCD PWB circuit block diagram

TONER
www.tonerplus.com.ua

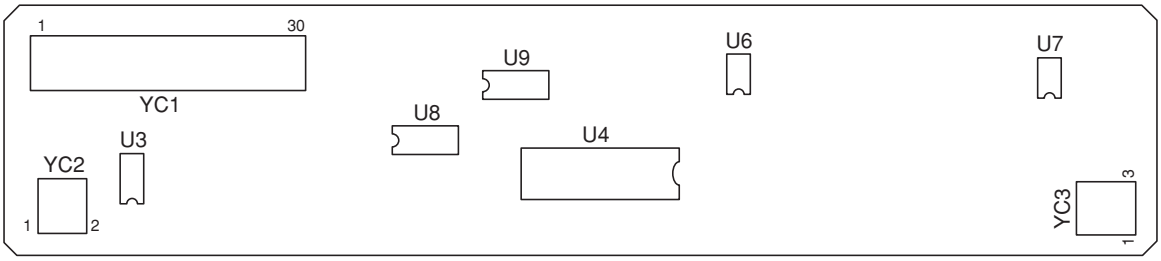

Figure 2-3-17 CCD PWB silk-screen diagram

Connector	Pin No.	Signal	I/O	Description
YC1	1	GND	-	Ground
Connected to the scanner PWB	2	GND	-	Ground
	3	GND	-	Ground
	4	SW	I	Color/monochro control signal
	5	SWN	I	Color/monochro control signal
	6	SH	I	CCD shift signal
	7	GND	-	Ground
	8	CPN	I	CCD CP signal
	9	GND	-	Ground
	10	RSN	I	CCD RS signal
	11	GND	-	Ground
	12	CCDCLK	I	CCD clock signal
	13	GND	-	Ground
	14	CCDCLKN	I	CCD clock signal
	15	GND	-	Ground
	16	GND	-	Ground
	17	GND	-	Ground
	18	CCDG(O)	O	Image data G (green) signal (analog)
	19	GND	-	Ground
	20	CCDB(E)	O	Image data B (blue) signal (analog)
	21	GND	-	Ground
	22	CCDR	O	Image data R (red) signal (analog)
	23	+12 V	I	12 V DC power supply
	24	+5 V	I	5 V DC power supply
	25	+5 V	I	5 V DC power supply
	26	HPSWN	O	Scanner home position sensor: On/Off
	27	PGND	-	Ground
	28	PGND	-	Ground
	29	LAMP	I	Exposure lamp: On/Off
	30	LAMP	I	Exposure lamp: On/Off
YC2	1	LAMP	O	Exposure lamp: On/Off
Connected to the inverter PWB	2	PGND	-	Ground
YC3	1	GND	-	Ground
Connected to the scanner home position sensor	2	HPSWN	I	Scanner home position sensor: On/Off
	3	+5 V	O	5 V DC power supply

TONER
www.tonerplus.com.ua

2-3-7 Operation PWB

The operation PWB consists of key switches and LEDs. The lighting of LEDs is determined by scan signals (SCAN0 to SCAN7) and LED lighting selection signals (LED0 to LED3) from the main PWB. The key switches operated are identified by the scan signals (SCAN0 to SCAN7) and the return signals (KEYIN0 to KEYIN7).
As an example, to light LEDG9, the LED lighting selection signal (LED3) should be driven low in synchronization with a low level on the scan signal (SCAN0). LEDs can be lit dynamically by repeating such operations.
As another example, if K9 is pressed, the corresponding key switch is turned on feeding the low level of the scan signal (SCAN6) back to the main PWB via the return signal (KEYIN7). The main PWB locates the position where the line outputting the scan signal and the line inputting the return signal cross, and thereby determines which key switch was operated.

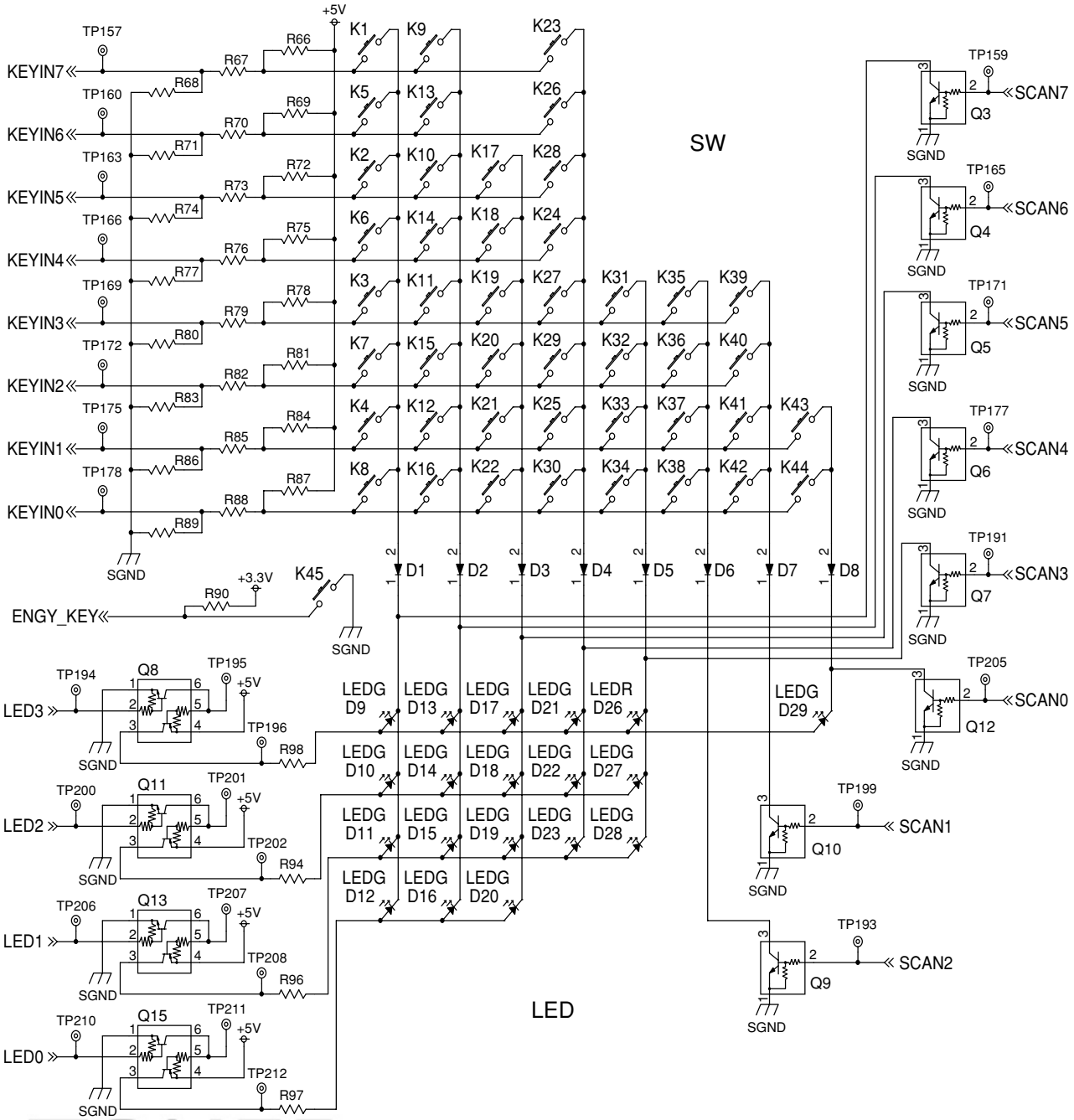

Figure 2-3-18 Operator PWB circuit block diagram

TONER
www.tonerplus.com.ua

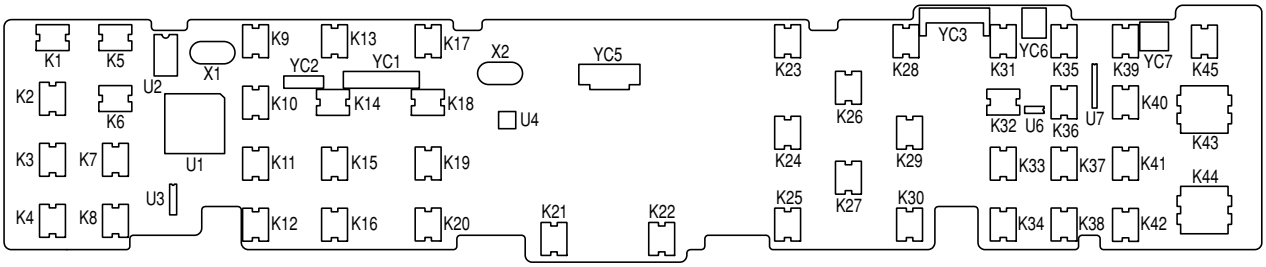

Figure 2-3-19 Operator PWB silk-screen diagram

Connector	Pin No.	Signal	I/O	Description
YC3 Connected to the main PWB	1	SGND	-	Ground
	2	AUDIO	I	AUDIO signal
	3	+5 V	I	5 V DC power supply
	4	FPRST	I	FPRST signal
	5	PANTXD	I	PANTXD signal
	6	PANRXD	O	PANRXD signal
	7	PANRTS	I	PANRTS signal
	8	PANCTS	O	PANCTS signal
	9	+3.3 V	I	3.3 V DC power supply
	10	CHECK	I	CHECK signal
	11	TEMP	O	Temperature detection data
YC5 Connected to the LCD	1	SGND	-	Ground
	2	V5	O	V5 signal
	3	V4	O	V4 signal
	4	V3	O	V3 signal
	5	V2	O	V2 signal
	6	V1	O	V1 signal
	7	CAP2+	O	CAP2+ signal
	8	CAP2-	O	CAP2- signal
	9	CAP1-	O	CAP1- signal
	10	CAP1+	O	CAP1+ signal
	11	CAP3-	O	CAP3- signal
	12	Vout	-	Ground
	13	Vss	-	Ground
	14	Vdd	O	3.3 V DC power supply
	15	SI	O	SI signal
	16	SCL	O	SCL signal
	17	A0	O	A0 signal
	18	/RES	O	/RES signal
	19	/CS1	O	/CS1 signal
	20	SGND	-	Ground
YC6 Connected to the speaker	1	OUT-	O	OUT- signal
	2	OUT+	O	OUT+ signal

TONER
www.tonerplus.com.ua

2-3-8 Scanner PWB

The scanner PWB consists of scanner driver circuit Q1 to Q5 and exposure lamp driver circuit U1, relays signals from engine PWB, main PWB, operation PWB, CCD PWB and optional document processor.

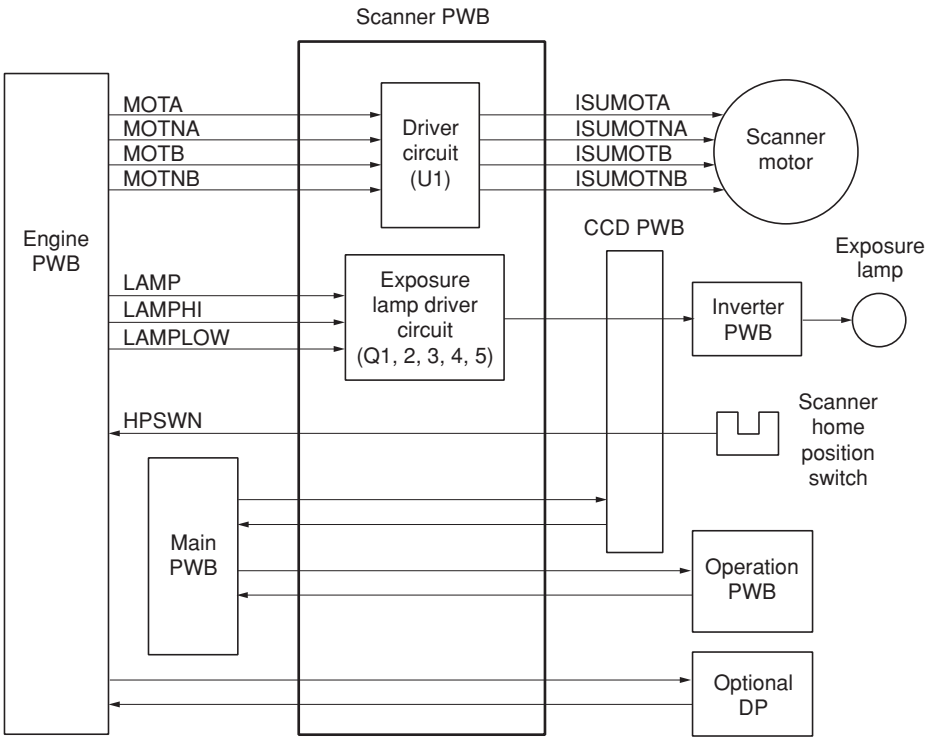

Figure 2-3-20 Scanner PWB circuit block diagram

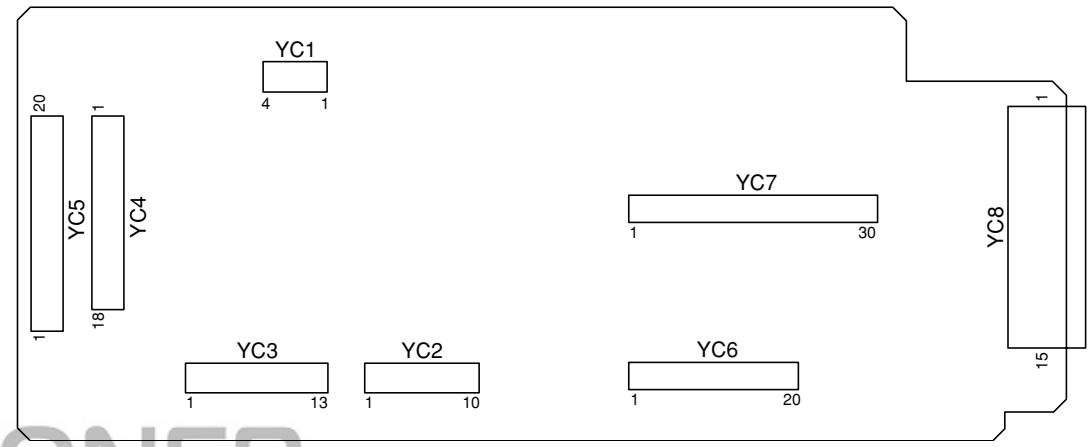

TONER
www.tonerplus.com.ua

Figure 2-3-21 Scanner PWB silk-screen diagram

Timing chart No. 1 Continuous copying of an A4R/8½" × 11" original onto two sheets of A4R/8½" × 11"R copy paper

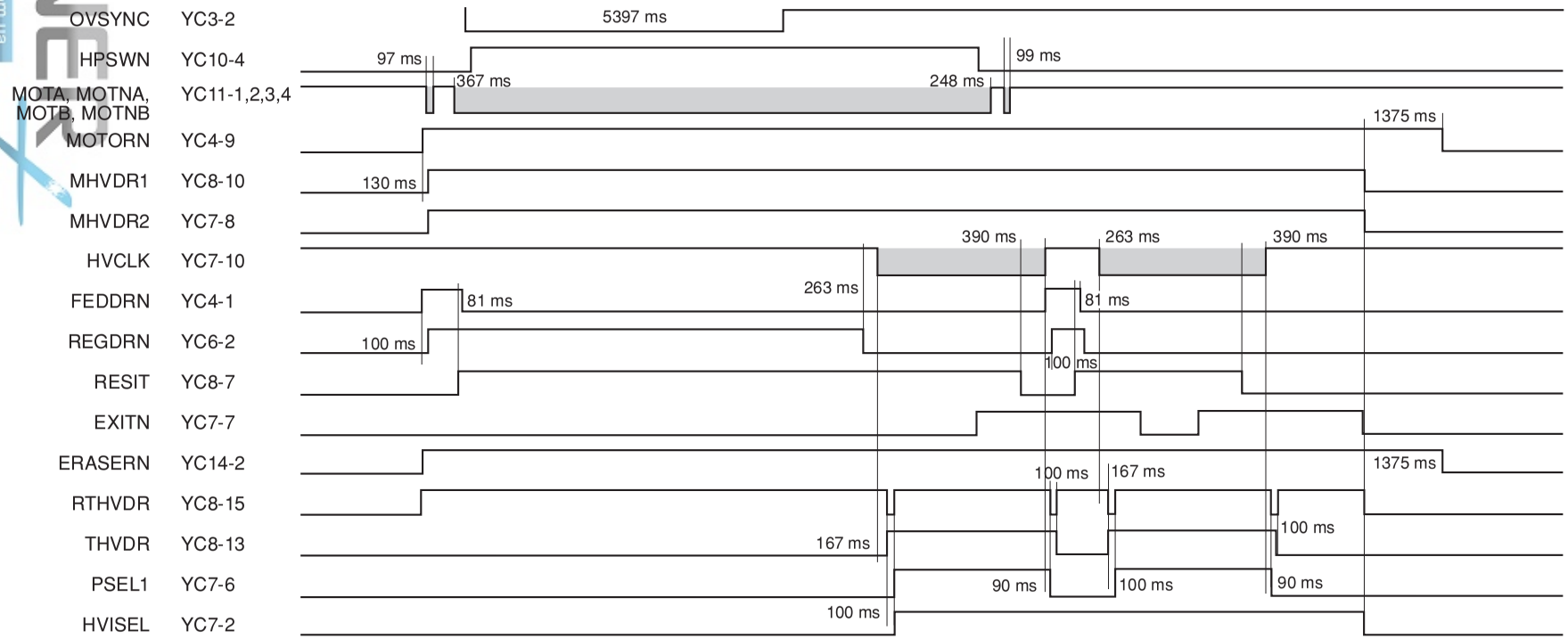

TONER X
www.tonerplus.com.ua

Timing chart No. 2 Continuous copying of an A5R/5$^1/_2$"×8$^1/_2$" original onto two sheets of A5R/5$^1/_2$"×8$^1/_2$" copy paper

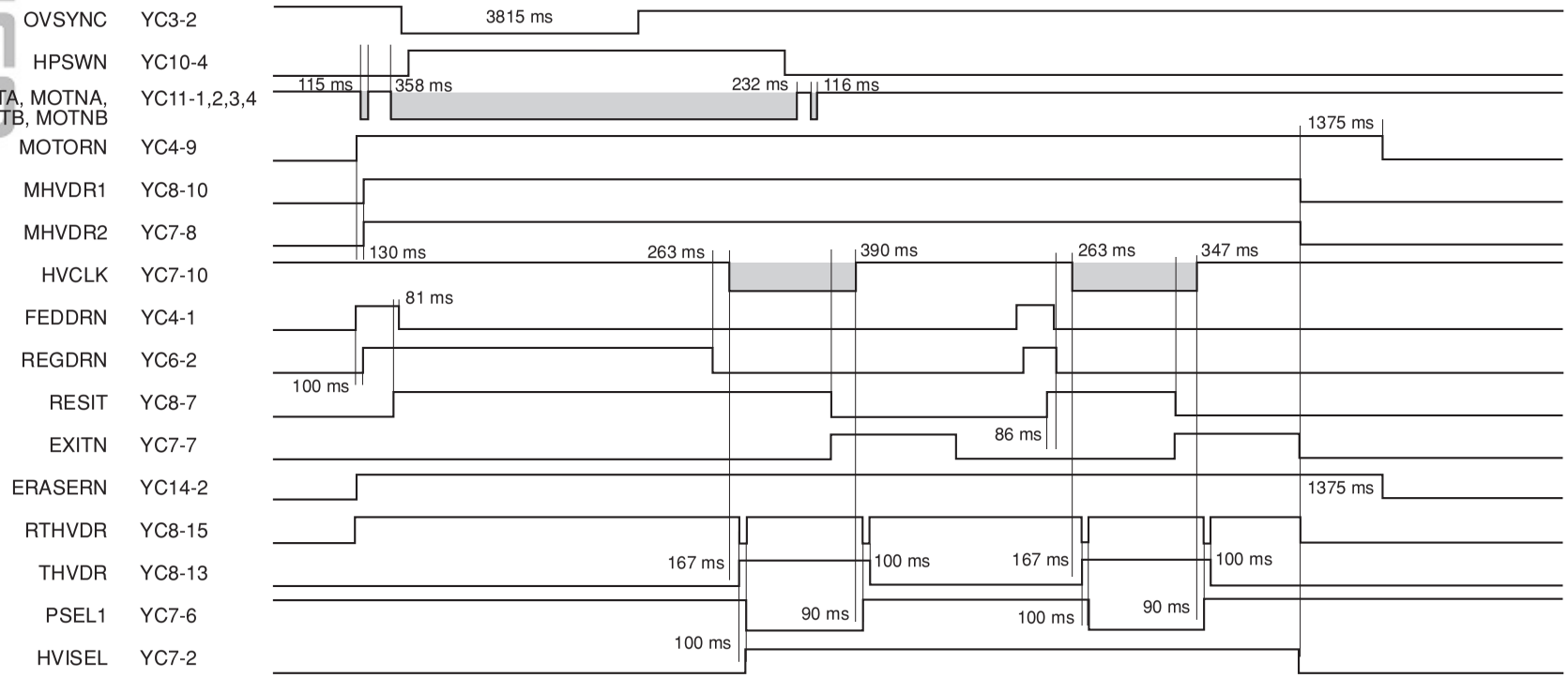

TONER
www.tonerplus.com.ua

Timing chart No. 3 Continuous copying of an B5R original onto two sheets of B5R copy paper

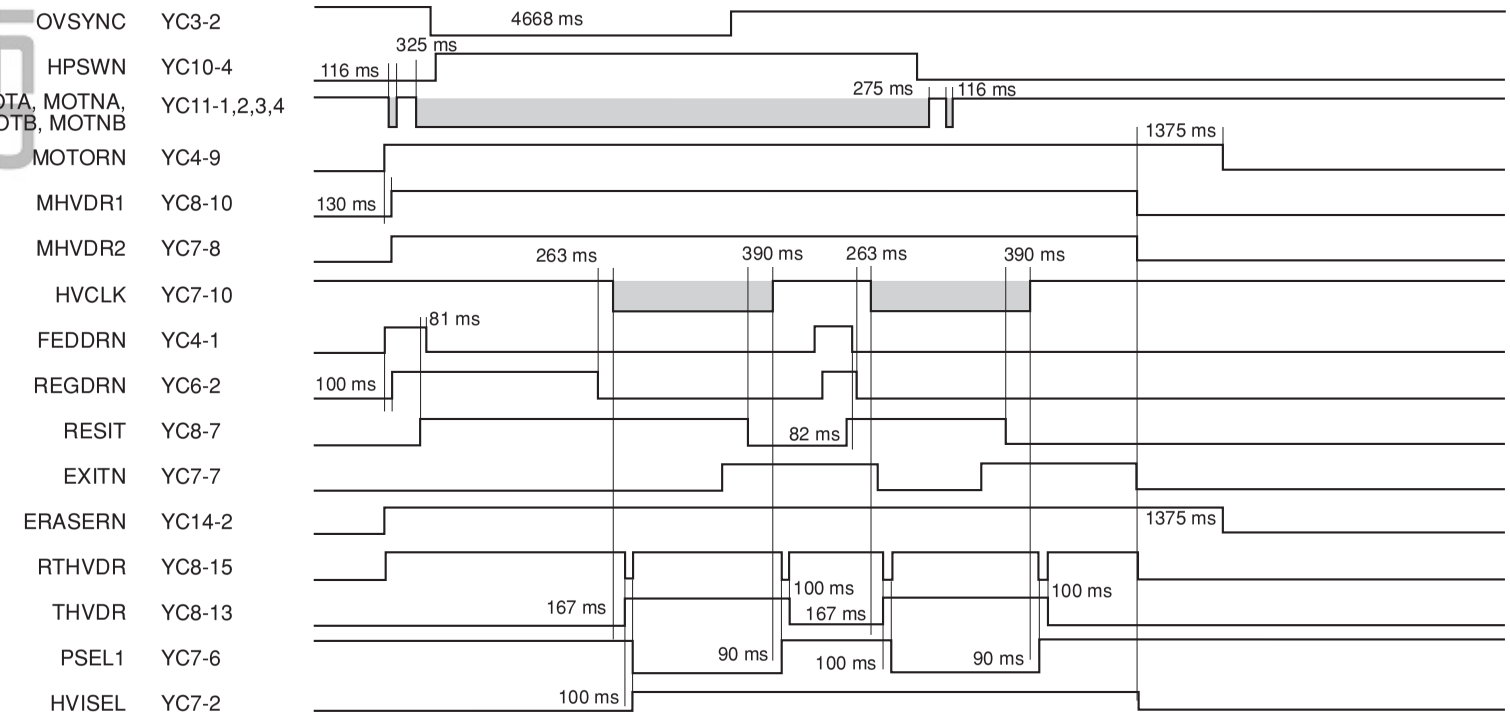

TONER
www.tonerplus.com.ua

Wiring diagram

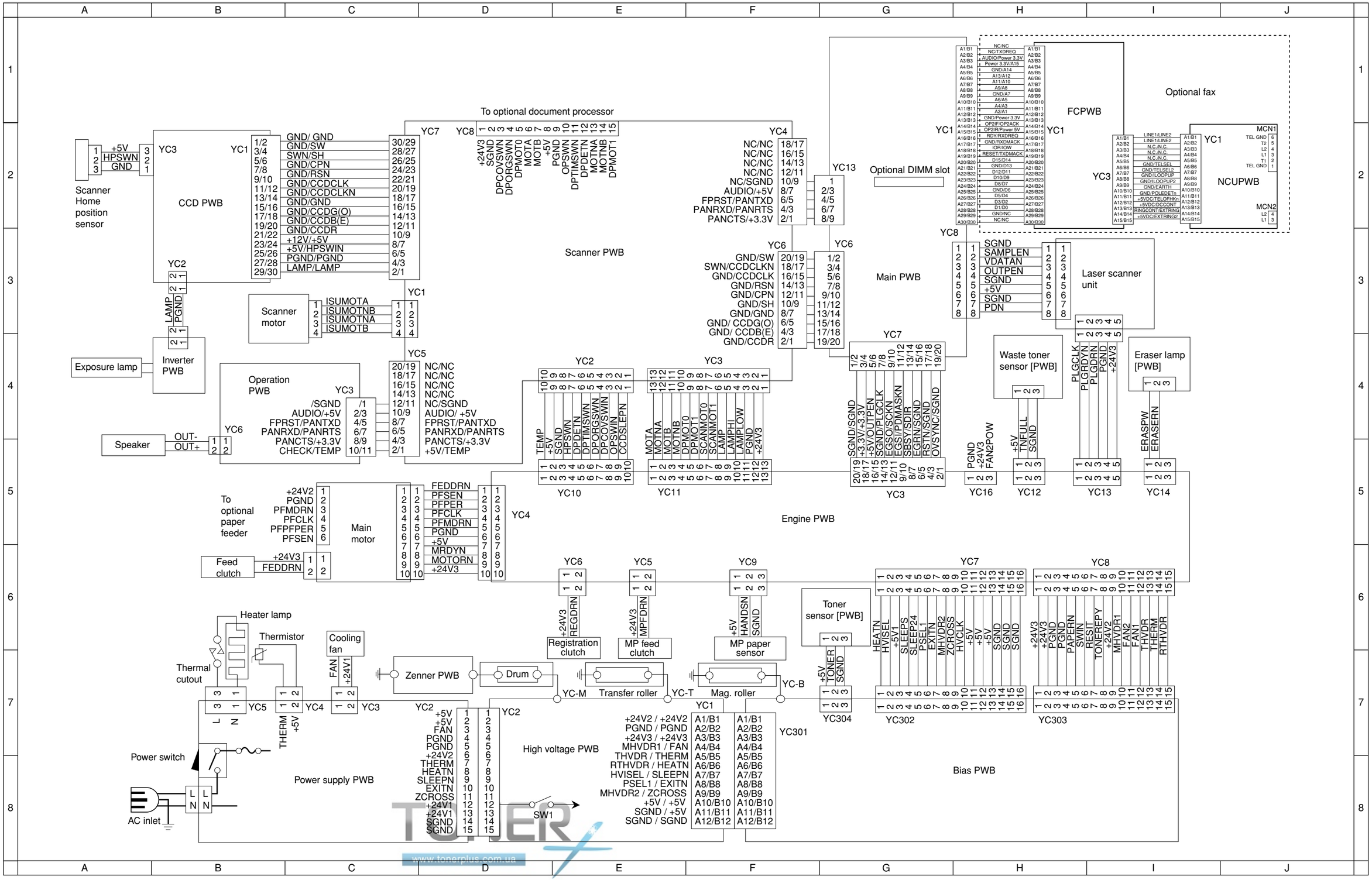

KYOCERA MITA EUROPE B.V.

Hoeksteen 40, 2132 MS Hoofddorp,
The Netherlands
Phone: +31.(0)20.654.0000
Home page: http://www.kyoceramita-europe.com
Email: info@kyoceramita-europe.com

KYOCERA MITA NEDERLAND B.V.

Hoeksteen 40 2132 MS Hoofddorp,
The Netherlands
Phone: +31.(0)20.587.7200

KYOCERA MITA (UK) LTD.

8 Beacontree Plaza
Gillette Way, Reading Berks RG2 0BS,
UK
Phone: +44.(0)118.931.1500

KYOCERA MITA ITALIA S.P.A.

Via Verdi 89 / 91 20063 Cernusco sul Naviglio,
(Milano), Italy
Phone: +39.02.92179.1

S.A. KYOCERA MITA BELGIUM N.V.

Hermesstraat 8A 1930 Zaventem,
Belgium
Phone: +32.(0)2.720.9270

KYOCERA MITA FRANCE S.A.

Parc Les Algorlthmes, Saint Aubin
91194 GIF-SUR-YVETTE,
France
Phone: +33.(0)1.6985.2600

KYOCERA MITA ESPAÑA S.A.

Edificio Kyocera, Avda de Manacor N. 2,
Urb. Parque Rozas 28290 Las Rozas, Madrid,
Spain
Phone: +34.(0)91.631.8392

KYOCERA MITA FINLAND OY

Kirvesmiehenkatu 4 00810 Helsinki,
Finland
Phone: +358.(0)9.4780.5200

KYOCERA MITA (SCHWEIZ) AG

Industriestrasse 28, 8604 Volketswil,
Switzerland
Phone: +41.(0)1.908.4949

KYOCERA MITA DEUTSCHLAND GMBH

Mollsfeld 12-40670 Meerbusch,
Germany
Phone: +49.(0)2159.918.0

KYOCERA MITA GMBH AUSTRIA

Eduard-Kittenberger Gasse 95
A-1230 Wien,
Austria
Phone: +43.(0)1.86338.401

KYOCERA MITA SVENSKA AB

Vretenragen 2, 6tr 171 54 Solna,
Sweden
Phone: +46.(0)8.546.550.00

KYOCERA MITA NORGE

Postboks 150 Oppsal, NO 0619 Oslo
Olaf Helsetsvei 6, NO 0694 Oslo,
Norway
Phone: +47.(0)22.62.73.00

KYOCERA MITA DANMARK A/S

Slotsmarken 11, 2 DK-2970 Hørsholm,
Denmark
Phone: +45.7022.3880

KYOCERA MITA PORTUGAL LDA.

Rua do Centro Cultural, no 41 1700-106 Lisbon,
Portugal
Phone: +351.(0)21.843.6780

KYOCERA MITA SOUTH AFRICA (PTY) LTD.

527 Kyalami Boulevard,
Kyalami Business Park Midrand,
South Africa
Phone: +27.(0)11.540.2600

KYOCERA MITA AMERICA, INC.

Headquarters:
225 Sand Road,
Fairfield, New Jersey 07004-0008,
U.S.A.
Phone: (973) 808-8444

KYOCERA MITA AUSTRALIA PTY. LTD.

Level 3, 6-10 Talavera Road, North Ryde,
N.S.W. 2113 Australia
Phone: (02) 9888-9999

KYOCERA MITA NEW ZEALAND LTD.

1-3 Parkhead Place, Albany
P.O. Box 302 125 NHPC, Auckland,
New Zealand
Phone: (09) 415-4517

KYOCERA MITA (THAILAND) CORP., LTD.

9/209 Ratchada-Prachachem Road,
Bang Sue, Bangkok 10800, Thailand
Phone: (02) 586-0320

KYOCERA MITA SINGAPORE PTE LTD.

121 Genting Lane, 3rd Level,
Singapore 349572
Phone: 67418733

KYOCERA MITA HONG KONG LIMITED

11/F., Mita Centre,
552-566, Castle Peak Road,
Tsuen Wan, New Territories,
Hong Kong
Phone: 24297422

KYOCERA MITA TAIWAN Corporation.

7F-1~2, No.41, Lane 221, Gangchi Rd.
Neihu District, Taipei, Taiwan, 114. R.O.C.
Phone: (02) 87511560

KYOCERA MITA Corporation

2-28, 1-chome, Tamatsukuri, Chuo-ku
Osaka 540-8585, Japan
Phone: (06) 6764-3555
http://www.kyoceramita.com

TONER+
www.tonerplus.com.ua

©2005 KYOCERA MITA Corporation
KYOCERA is a trademark of Kyocera Corporation

Printed in Holland