KYOCERA

FS-2000D
FS-3900DN
FS-4000DN

SERVICE MANUAL

TONER
www.tonerplus.com.ua

Published in January 2007
842GA115
2GASM065
Rev.5

CAUTION

RISK OF EXPLOSION IF BATTERY IS REPLACED BY AN INCORRECT TYPE. DISPOSE OF USED BATTERIES ACCORDING TO THE INSTRUCTIONS.

It may be illegal to dispose of this battery into the municipal waste stream. Check with your local solid waste officials for details in your area for proper disposal.

ATTENTION

IL Y A UN RISQUE D'EXPLOSION SI LA BATTERIE EST REMPLACEE PAR UN MODELE DE TYPE INCORRECT. METTRE AU REBUT LES BATTERIES UTILISEES SELON LES INSTRUCTIONS DONNEES.

Il peut être illégal de jeter les batteries dans des eaux d'égout municipales. Vérifiez avec les fonctionnaires municipaux de votre région pour les détails concernant des déchets solides et une mise au rebut appropriée.

TONER
www.tonerplus.com.ua

Revision history

Revision	Date	Replaced pages	Remarks
1	February 22, 2006	1-1-1, 1-1-2, 1-1-3, 1-1-4, 1-1-5, 1-1-6, 1-2-1, 1-2-7, 1-2-15, 1-3-2, 1-3-3, 1-3-5, 1-3-7, 1-3-8, 1-3-10, 1-3-15, 1-3-18, 1-4-1, 1-4-2, 1-4-3, 1-4-5, 1-4-11, 1-5-4, 1-5-5, 1-5-16, 1-5-17, 1-5-19, 1-5-20, 1-5-21, 1-5-23, 1-5-26, 1-5-27, 1-5-32, 1-6-1, 1-6-2, 1-6-4, 1-6-5, 2-1-1, 2-1-5, 2-1-6, 2-1-10, 1-2-11, 2-1-12, 2-1-13, 2-1-14, 2-2-1, 2-2-2, 2-2-3, 2-3-3, 2-3-4, 2-3-6, 2-3-7, 2-3-9, 2-3-10, 2-4-1, 2-4-2, 2-4-3, 2-4-4	
2	August 4, 2006	1-1-1, 1-2-2, 1-2-3, 1-2-4, 1-2-10, 1-3-4, 1-3-5, 1-3-9, 1-3-10, 1-3-12, 1-3-14, 1-4-6, 1-4-8, 1-4-9, 1-4-10, 1-4-11, 1-4-12, 1-5-1, 1-5-2, 1-5-26, 1-5-27, 1-5-29, 1-5-30, 1-6-5, 2-2-1, 2-2-2, 2-2-4, 2-3-3, 2-3-4, 2-4-1, 2-4-2, 2-4-3	
3	September 11, 2006	1-3-18, 1-5-12, 1-5-13	
4	November 28, 2006	1-2-1, 1-2-3, 1-3-2, 1-3-3, 1-3-12, 1-3-16, 1-3-17, 1-5-1, 1-5-3, 1-6-3	
5	January 15, 2007	1-4-5, 1-4-6, 1-4-7	

TONER
www.tonerplus.com.ua

This page is intentionally left blank.

TONER
www.tonerplus.com.ua

Safety precautions

This booklet provides safety warnings and precautions for our service personnel to ensure the safety of their customers, their machines as well as themselves during maintenance activities. Service personnel are advised to read this booklet carefully to familiarize themselves with the warnings and precautions described here before engaging in maintenance activities.

TONER
www.tonerplus.com.ua

Safety warnings and precautions

Various symbols are used to protect our service personnel and customers from physical danger and to prevent damage to their property. These symbols are described below:

⚠**DANGER:** High risk of serious bodily injury or death may result from insufficient attention to or incorrect compliance with warning messages using this symbol.

⚠**WARNING:** Serious bodily injury or death may result from insufficient attention to or incorrect compliance with warning messages using this symbol.

⚠**CAUTION:** Bodily injury or damage to property may result from insufficient attention to or incorrect compliance with warning messages using this symbol.

Symbols

The triangle (△) symbol indicates a warning including danger and caution. The specific point of attention is shown inside the symbol.

General warning.

Warning of risk of electric shock.

Warning of high temperature.

⃠ indicates a prohibited action. The specific prohibition is shown inside the symbol.

General prohibited action.

Disassembly prohibited.

● indicates that action is required. The specific action required is shown inside the symbol.

General action required.

Remove the power plug from the wall outlet.

Always ground the copier.

TONER
www.tonerplus.com.ua

1.Installation Precautions

⚠WARNING

- Do not use a power supply with a voltage other than that specified. Avoid multiple connections to one outlet: they may cause fire or electric shock. When using an extension cable, always check that it is adequate for the rated current. .....

- Connect the ground wire to a suitable grounding point. Not grounding the copier may cause fire or electric shock. Connecting the earth wire to an object not approved for the purpose may cause explosion or electric shock. Never connect the ground cable to any of the following: gas pipes, lightning rods, ground cables for telephone lines and water pipes or faucets not approved by the proper authorities. .....

⚠CAUTION:

- Do not place the copier on an infirm or angled surface: the copier may tip over, causing injury. .....

- Do not install the copier in a humid or dusty place. This may cause fire or electric shock. .....

- Do not install the copier near a radiator, heater, other heat source or near flammable material.

  This may cause fire. .....

- Allow sufficient space around the copier to allow the ventilation grills to keep the machine as cool as possible. Insufficient ventilation may cause heat buildup and poor copying performance. .....

- Always handle the machine by the correct locations when moving it. .....

- Always use anti-toppling and locking devices on copiers so equipped. Failure to do this may cause the copier to move unexpectedly or topple, leading to injury. .....

- Avoid inhaling toner or developer excessively. Protect the eyes. If toner or developer is accidentally ingested, drink a lot of water to dilute it in the stomach and obtain medical attention immediately. If it gets into the eyes, rinse immediately with copious amounts of water and obtain medical attention. .....

- Advice customers that they must always follow the safety warnings and precautions in the copier's instruction handbook. .....

TONER
www.tonerplus.com.ua

2.Precautions for Maintenance

⚠WARNING

- Always remove the power plug from the wall outlet before starting machine disassembly. .....

- Always follow the procedures for maintenance described in the service manual and other related brochures. .....

- Under no circumstances attempt to bypass or disable safety features including safety mechanisms and protective circuits. .....

- Always use parts having the correct specifications. .....
- Always use the thermostat or thermal fuse specified in the service manual or other related brochure when replacing them. Using a piece of wire, for example, could lead to fire or other serious accident. .....

- When the service manual or other serious brochure specifies a distance or gap for installation of a part, always use the correct scale and measure carefully. .....

- Always check that the copier is correctly connected to an outlet with a ground connection. .....
- Check that the power cable covering is free of damage. Check that the power plug is dust-free. If it is dirty, clean it to remove the risk of fire or electric shock. .....

- Never attempt to disassemble the optical unit in machines using lasers. Leaking laser light may damage eyesight. .....

- Handle the charger sections with care. They are charged to high potentials and may cause electric shock if handled improperly. .....

⚠CAUTION

- Wear safe clothing. If wearing loose clothing or accessories such as ties, make sure they are safely secured so they will not be caught in rotating sections. .....

- Use utmost caution when working on a powered machine. Keep away from chains and belts. .....

- Handle the fixing section with care to avoid burns as it can be extremely hot. .....
- Check that the fixing unit thermistor, heat and press rollers are clean. Dirt on them can cause abnormally high temperatures. .....

TONER
www.tonerplus.com.ua

- Do not remove the ozone filter, if any, from the copier except for routine replacement. .....

- Do not pull on the AC power cord or connector wires on high-voltage components when removing them; always hold the plug itself. .....

- Do not route the power cable where it may be stood on or trapped. If necessary, protect it with a cable cover or other appropriate item. .....

- Treat the ends of the wire carefully when installing a new charger wire to avoid electric leaks. .....

- Remove toner completely from electronic components. .....

- Run wire harnesses carefully so that wires will not be trapped or damaged. .....

- After maintenance, always check that all the parts, screws, connectors and wires that were removed, have been refitted correctly. Special attention should be paid to any forgotten connector, trapped wire and missing screws. .....

- Check that all the caution labels that should be present on the machine according to the instruction handbook are clean and not peeling. Replace with new ones if necessary. .....

- Handle greases and solvents with care by following the instructions below: .....

  Use only a small amount of solvent at a time, being careful not to spill. Wipe spills off completely.
  Ventilate the room well while using grease or solvents.
  Allow applied solvents to evaporate completely before refitting the covers or turning the power switch on.
  Always wash hands afterwards.

- Never dispose of toner or toner bottles in fire. Toner may cause sparks when exposed directly to fire in a furnace, etc. .....

- Should smoke be seen coming from the copier, remove the power plug from the wall outlet immediately. .....

3.Miscellaneous

⚠WARNING

- Never attempt to heat the drum or expose it to any organic solvents such as alcohol, other than the specified refiner; it may generate toxic gas. .....

TONER+
www.tonerplus.com.ua

This page is intentionally left blank.

TONER
www.tonerplus.com.ua

CONTENTS

1-1 Specifications
1-1-1 Specifications 1-1-1
1-1-2 Parts names 1-1-3
(1) Overall 1-1-3
(2) Operation panel 1-1-4
1-1-3 Machine cross section 1-1-5

1-2 Installation
1-2-1 Installation environment 1-2-1
1-2-2 Unpacking and installation 1-2-2
(1) Installation procedure 1-2-2
1-2-3 Installing the expanding memory (optional) 1-2-12
1-2-4 Installing the memory card or hard disk (optional) 1-2-13
1-2-5 Installing the network interface card (optional) 1-2-14
1-2-6 Installing the network interface card (optional for 30/31 ppm printer [EUR/USA model] only) 1-2-15

1-3 Maintenance Mode
1-3-1 Maintenance mode 1-3-1
(1) Executing a maintenance item 1-3-1

1-4 Troubleshooting
1-4-1 Paper misfeed detection 1-4-1
(1) Paper misfeed indication 1-4-1
(2) Paper misfeed detection 1-4-1
1-4-2 Self-diagnostic function 1-4-2
(1) Self-diagnostic function 1-4-2
(2) Self diagnostic codes 1-4-2
1-4-3 Image formation problems 1-4-8
(1) Completely blank printout. 1-4-8
(2) All-black printout. 1-4-9
(3) Dropouts. 1-4-10
(4) Black dots. 1-4-10
(5) Black horizontal streaks. 1-4-12
(6) Black vertical streaks. 1-4-12
(7) Unsharpness. 1-4-12
(8) Gray background. 1-4-13
(9) Dirt on the top edge or back of the paper. 1-4-13
(10) Undulated printing at the left edge (scanning start position). 1-4-13
1-4-4 Electric problems 1-4-14
1-4-5 Mechanical problems 1-4-16

1-5 Assembly and Disassembly
1-5-1 Precautions for assembly and disassembly 1-5-1
(1) Precautions 1-5-1
(2) Drum 1-5-1
(3) Toner container 1-5-1
1-5-2 Outer covers 1-5-2
(1) Detaching and refitting the top cover 1-5-2
(2) Detaching and refitting the right cover and left cover 1-5-3
1-5-3 Paper feed section 1-5-4
(1) Detaching and refitting the paper feed assembly (paper feed roller and pickup roller) 1-5-4
(2) Detaching and refitting the retard roller 1-5-5
(3) Detaching and refitting the registration upper and lower roller 1-5-6
(4) Detaching and refitting the MP tray paper feed roller 1-5-8
1-5-4 Developer section 1-5-9
(1) Detaching and refitting the developer unit 1-5-9
1-5-5 Drum section 1-5-10
(1) Detaching and refitting the drum unit 1-5-10
(2) Detaching and refitting the main charger unit 1-5-11
1-5-6 Transfer/separation section 1-5-12
(1) Detaching and refitting the transfer roller and separation charger brush unit 1-5-12
1-5-7 Fuser section 1-5-14

TONER www.tonerplus.com.ua

(1) Detaching and refitting the fuser unit....1-5-14
(2) Detaching and refitting the fuser heater lamp....1-5-15
(3) Detaching and refitting the heat roller....1-5-17
(4) Detaching and refitting the press roller....1-5-18
(5) Detaching and refitting the fuser thermistor M, fuser thermistor S, and thermal cutout....1-5-19
1-5-8 PWBs....1-5-22
(1) Detaching and refitting the engine PWB....1-5-22
(2) Detaching and refitting the main PWB....1-5-26
(3) Detaching and refitting the power source unit....1-5-28
1-5-9 Others....1-5-30
(1) Detaching and refitting the paper feed drive unit....1-5-30
(2) Detaching and refitting the main drive unit....1-5-31
(3) Detaching and refitting the laser scanner unit....1-5-32

1-6 Firmware
1-6-1 Downloading firmware....1-6-1
(1) Downloading the firmware from the parallel interface....1-6-2
(2) Downloading the firmware from the memory card....1-6-3
(3) Downloading the firmware from the USB memory....1-6-5

2-1 Mechanical Construction
2-1-1 Paper feed section....2-1-1
(1) Paper cassette paper feed section....2-1-1
(2) MP tray paper feed section....2-1-2
(3) Paper feed conveying section....2-1-3
2-1-2 Drum section....2-1-4
(1) Drum section....2-1-4
2-1-3 Expose section....2-1-5
(1) Laser scanner unit....2-1-5
2-1-4 Developing section....2-1-7
(1) Developing section....2-1-7
2-1-5 Transfer/separation section....2-1-8
(1) Transfer/separation section....2-1-8
2-1-6 Cleaning section....2-1-9
2-1-7 Fuser section....2-1-10
(1) Fuser unit....2-1-10
2-1-8 Paper exit section/rear unit....2-1-12
(1) Paper exit section/rear unit....2-1-12
2-1-9 Duplex conveying section....2-1-14
(1) Duplex conveying section....2-1-14

2-2 Electrical Parts Layout
2-2-1 Electrical parts layout....2-2-1
(1) Electrical parts layout....2-2-1

2-3 Operation of the PWBs
2-3-1 Power source unit....2-3-1
2-3-2 Engine PWB....2-3-3
2-3-3 Main PWB....2-3-9

2-4 Appendixes
(1) Wiring diagram (30/31 ppm printer [EUR/USA model])....2-4-1
(2) Wiring diagram (35/37 ppm printer [EUR/USA model])....2-4-2
(3) Wiring diagram (45/47 ppm printer [EUR/USA model])....2-4-3
(4) Repetitive defects gauge....2-4-4

TONER
www.tonerplus.com.ua

1-1-1 Specifications

Printing method ..... Semiconductor laser and electrophotography

Printing speeds ..... Simplex:

30/31 ppm printer	35/37 ppm printer	45/47 ppm printer
A5: 19 ppm	A6: 21 ppm	A6: 23 ppm
A4: 30 ppm	A5: 21 ppm	A5: 23 ppm
Letter: 31 ppm	A4: 35 ppm	A4: 45 ppm
Legal: 26 ppm	Letter: 37 ppm	Letter: 47 ppm
	Legal: 28 ppm	Legal: 38 ppm

Duplex:

30/31 ppm printer	35/37 ppm printer	45/47 ppm printer
A4: 15.5 ppm	A4: 25 ppm	A4: 33.5 ppm
Letter: 15.5 ppm	Letter: 26 ppm	Letter: 34.5 ppm

Paper sizes ..... Paper cassette:

30/31 ppm printer	35/37 ppm printer	45/47 ppm printer
A4, A5, B5, letter, legal, folio, officio II, custom (148 × 210 to 216 × 356 mm/ 5 13/16 × 8 1/4 to 8 1/2 × 14")	A4, A5, B5, A6, letter, legal, folio, officio II, custom (148 × 210 to 216 × 356 mm) 5 13/16 × 8 1/4 to 8 1/2 × 14")	A4, A5, B5, A6, letter, legal, folio, officio II, custom (148 × 210 to 216 × 356 mm/ 5 13/16 × 8 1/4 to 8 1/2 × 14")

MP tray:

30/31 ppm printer	35/37 ppm printer	45/47 ppm printer
A4, A5, B5, A6, letter, legal, folio, officio II, custom (70 × 148 to 216 × 356 mm/ 2 3/4 × 5 13/16 to 8 1/2 × 14")	A4, A5, B5, A6, letter, legal, folio, officio II, custom (70 × 148 to 216 × 356 mm) 2 3/4 × 5 13/16 to 8 1/2 × 14")	A4, A5, B5, A6, letter, legal, folio, officio II, custom (70 × 148 to 216 × 356 mm) 2 3/4 × 5 13/16 to 8 1/2 × 14")

Paper types ..... Paper cassette:

Plain, preprinted, bond, recycled, rough, letterhead, color, prepunched, high quality, and custom

MP tray:

Plain, transparency, preprinted, labels, bond, recycled, vellum, rough, letterhead, color, prepunched, envelope, cardstock, thick, high quality, and custom

Paper feed source capacity ..... Paper cassette: 500 sheets (80 g/m^2)

MP tray: 100 sheets (80 g/m^2)

Output tray capacity ..... Top tray:

30/31 ppm printer	35/37 ppm printer	45/47 ppm printer
250 sheets (80/m^2)	500 sheets (80/m^2)	500 sheets (80/m^2)

Face up tray (optional):

30/31 ppm printer	35/37 ppm printer	45/47 ppm printer
Not available	PT-310: 250 sheets (80/m^2)	PT-310: 250 sheets (80/m^2)

Photo conductor ..... a-Si (diameter: 30mm/1 3/16")

Charging system ..... Contact charger roller method (positive charging)

Developing system ..... Single component developer

Transfer system ..... Transfer roller

Separation system ..... Separation brush (DC bias)

Fixing system ..... Heat fusing with a heat roller and a press roller

Charge erasing system ..... Light emitted by LED

Cleaning system ..... Counter blade cleaning

Warm-up time (22 °C/71.6 °F, 60%RH) Power on:

30/31 ppm printer	35/37 ppm printer	45/47 ppm printer
13 seconds or less	15 seconds or less	17 seconds or less

Sleep:

30/31 ppm printer	35/37 ppm printer	45/47 ppm printer
10 seconds or less	15 seconds or less	15 seconds or less

TONER
www.tonerplus.com.ua

NOTE: 30/31 ppm printer (EUR/USA model), 35/37 ppm printer (EUR/USA model), 45/47 ppm printer (EUR/USA model)

First print out (A4)	**30/31 ppm printer**	**35/37 ppm printer**	**45/47 ppm printer**
	19 seconds or less	25.5 seconds or less	24 seconds or less
Resolution	Fine 1200, Fast 1200, 600 dpi, 300 dpi		
Monthly duty	Average:		
	30/31 ppm printer	**35/37 ppm printer**	**45/47 ppm printer**
	4,000 pages	8,000 pages	12,000 pages
	Maximum:		
	30/31 ppm printer	**35/37 ppm printer**	**45/47 ppm printer**
	150,000 pages	200,000 pages	250,000 pages
Operating systems	Microsoft Windows 95/98/Me/2000/XP, Microsoft Windows NT4.0, Microsoft Windows Server 2003, Apple Macintosh OS 9, Apple Macintosh OS X		
Controller	**30/31 ppm printer**	**35/37 ppm printer**	**45/47 ppm printer**
	PowerPC 440 400 MHz	PowerPC 750CXr 400 MHz	PowerPC 750CXr 500 MHz
Memory	Standard:		
	30/31 ppm printer	**35/37 ppm printer**	**45/47 ppm printer**
	64 MB	64 MB	128 MB
	Maximum:		
	30/31 ppm printer	**35/37 ppm printer**	**45/47 ppm printer**
	576 MB	576 MB	640 MB
Interface	Standard:		
	30/31 ppm printer	**35/37 ppm printer**	**45/47 ppm printer**
	USB: Hi-Speed USB, Full-Speed USB (USB memory slot) Parallel: IEEE1284 KUIO-LV slot	USB: Hi-Speed USB, Full-Speed USB (USB memory slot) Parallel: IEEE1284 Network: 10BASE-T/100BASE-TX KUIO-LV slot	USB: Hi-Speed USB, Full-Speed USB (USB memory slot) Parallel: IEEE1284 Network: 10BASE-T/100BASE-TX KUIO-LV slot
	Optional:		
	30/31 ppm printer	**35/37 ppm printer**	**45/47 ppm printer**
	IB-11: Serial, IB-21E/IB-30: 10BASE-T/100BASE-TX	IB-11: Serial, IB-21E: 10BASE-T/100BASE-TX	IB-11: Serial, IB-21E: 10BASE-T/100BASE-TX
Operation environment	Temperature: 10 to 32.5°C/50 to 90.5°F Relative humidity: 15 to 80 % Altitude: 2,500 m/8,202 ft maximum Illumination: 1,500 lux maximum		
Dimensions (W × D × H)	**30/31 ppm printer**	**35/37 ppm printer**	**45/47 ppm printer**
	382 × 394 × 285 mm 15 1/16 × 15 1/2 × 11 1/4"	382 × 394 × 320 mm 15 1/16 × 15 1/2 × 12 5/8"	382 × 394 × 320 mm 15 1/16 × 15 1/2 × 12 5/8"
Weight (without toner container)	**30/31 ppm printer**	**35/37 ppm printer**	**45/47 ppm printer**
	15.8 kg 34.83 lbs	16.7 kg 36.82 lbs	16.7 kg 36.82 lbs
Operating noise	During printing		
	30/31 ppm printer	**35/37 ppm printer**	**45/47 ppm printer**
	LpA = 50 dB (A)	LpA = 52 dB (A)	LpA = 56 dB (A)
	During standby:		
	30/31 ppm printer	**35/37 ppm printer**	**45/47 ppm printer**
	LpA = 40 dB (A)	LpA = 40 dB (A)	LpA = 40 dB (A)
	During sleep mode:		
	30/31 ppm printer	**35/37 ppm printer**	**45/47 ppm printer**
	Immeasurably low	Immeasurably low	Immeasurably low
	(In accordance with EN ISO7779 [Bystander position, sound pressure level at the front])		

TONER
www.tonerplus.com.ua

NOTE: 30/31 ppm printer (EUR/USA model), 35/37 ppm printer (EUR/USA model), 45/47 ppm printer (EUR/USA model)

1-1-2 Parts names

(1) Overall

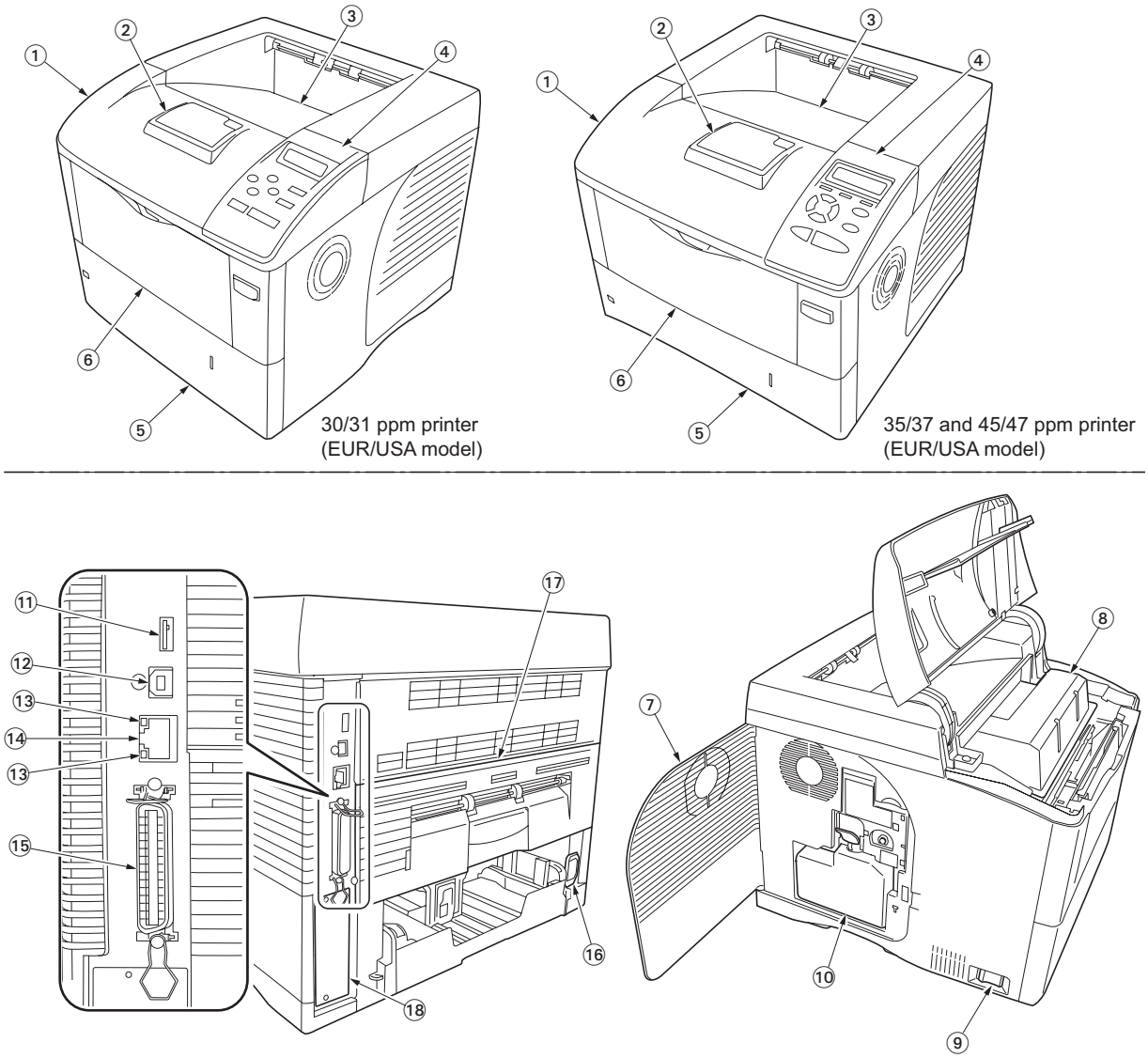

Figure 1-1-1

1. Top cover
2. Paper stopper
3. Top tray
4. Operation panel
5. Paper cassette
6. MP (Multi-Purpose) tray
7. Left side cover
8. Toner container
9. Power switch
10. Waste toner box
11. USB memory slot
12. USB interface connector
13. Network indicators
14. Network interface connector
15. Parallel interface connector
16. AC inlet
17. Rear unit
18. Option interface slot (Network/ Serial/Memory card/Hard disk)

TONER
www.tonerplus.com.ua

(2) Operation panel

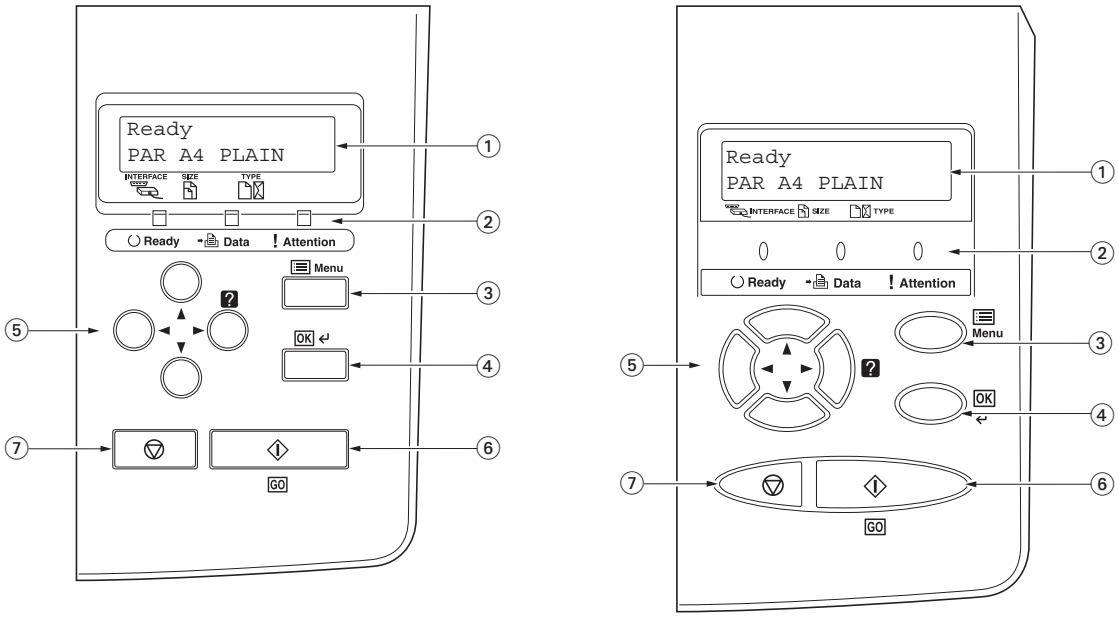

30/31 ppm printer
(EUR/USA model)

35/37 and 45/47 ppm printer
(EUR/USA model)

Figure 1-1-2

1. Message display
2. Indicators
3. Menu key
4. OK key
5. Cursor keys
6. GO key
7. Cancel key

TONER
www.tonerplus.com.ua

1-1-3 Machine cross section

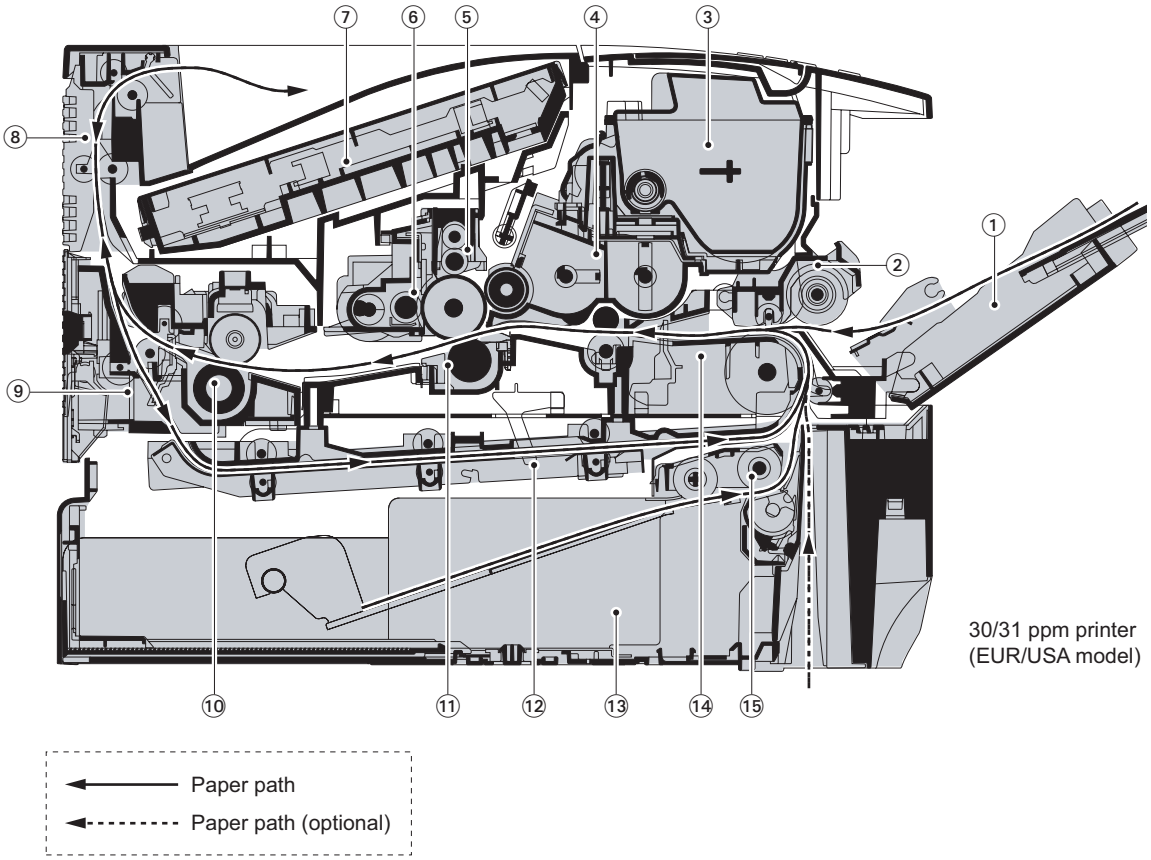

Figure 1-1-3 Machine cross section (30/31 ppm printer [EUR/USA model])

1. MP (Multi-Purpose) tray
2. MP tray paper feed unit
3. Toner container
4. Developer unit
5. Main charger unit
6. Drum unit
7. Laser scanner unit
8. Paper exit section
9. Rear unit
10. Fuser unit
11. Transfer/separation section
12. Duplex paper conveying section
13. Paper cassette
14. Paper conveying section
15. Paper cassette paper feed section

TONER
www.tonerplus.com.ua

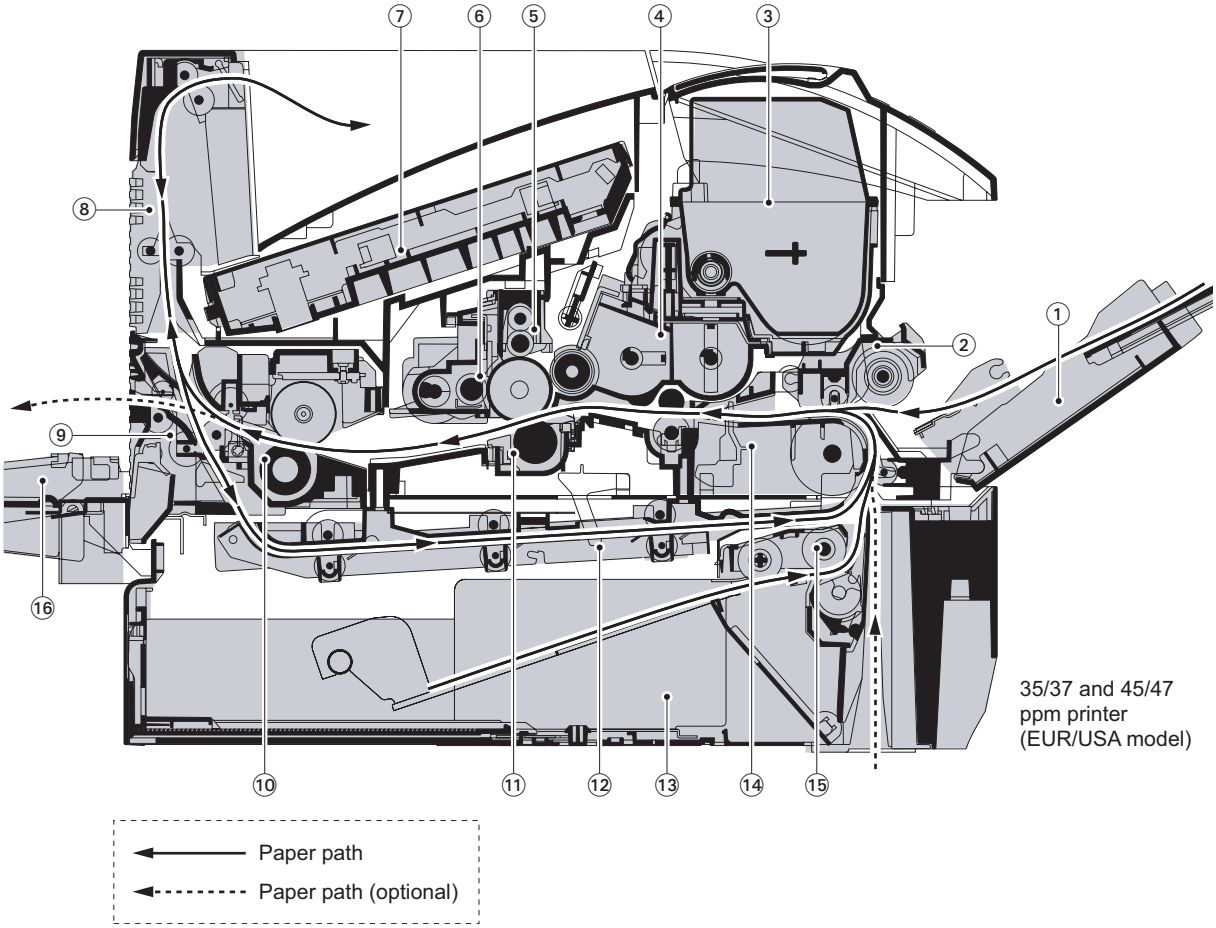

Figure 1-1-4 Machine cross section (35/37 and 45/47 ppm printer [EUR/USA model])

1. MP (Multi-Purpose) tray
2. MP tray paper feed unit
3. Toner container
4. Developer unit
5. Main charger unit
6. Drum unit
7. Laser scanner unit
8. Paper exit section
9. Rear unit
10. Fuser unit
11. Transfer/separation section
12. Duplex paper conveying section
13. Paper cassette
14. Paper conveying section
15. Paper cassette paper feed section
16. Face-up tray (optional)

TONER
www.tonerplus.com.ua

1-2-1 Installation environment

1. Temperature: 10 to 32.5°C/50 to 90.5°F
2. Humidity: 15 to 80%RH
3. Power supply: 120 V AC, 9.0 A
   220 - 240 V AC, 5.0 A (Average)
4. Power source frequency: 50 Hz ±0.3%/60 Hz ±0.3%
5. Installation location
   Avoid direct sunlight or bright lighting. Ensure that the photoconductor will not be exposed to direct sunlight or other strong light when removing paper jams.
   Avoid extremes of temperature and humidity, abrupt ambient temperature changes, and hot or cold air directed onto the machine.
   Avoid dust and vibration.
   Choose a surface capable of supporting the weight of the machine.
   Place the machine on a level surface (maximum allowance inclination: 1°).
   Avoid air-borne substances that may adversely affect the machine or degrade the photoconductor, such as mercury, acidic of alkaline vapors, inorganic gasses, NOx, SOx gases and chlorine-based organic solvents.
   Select a room with good ventilation.
6. Allow sufficient access for proper operation and maintenance of the machine.
   Machine front: 600 mm/23 5/8"
   Machine rear: 200 mm/7 7/8"
   Machine right: 100 mm/3 15/16"
   Machine left: 300 mm/11 13/16"
   Machine top: 750 mm/29 1/2"

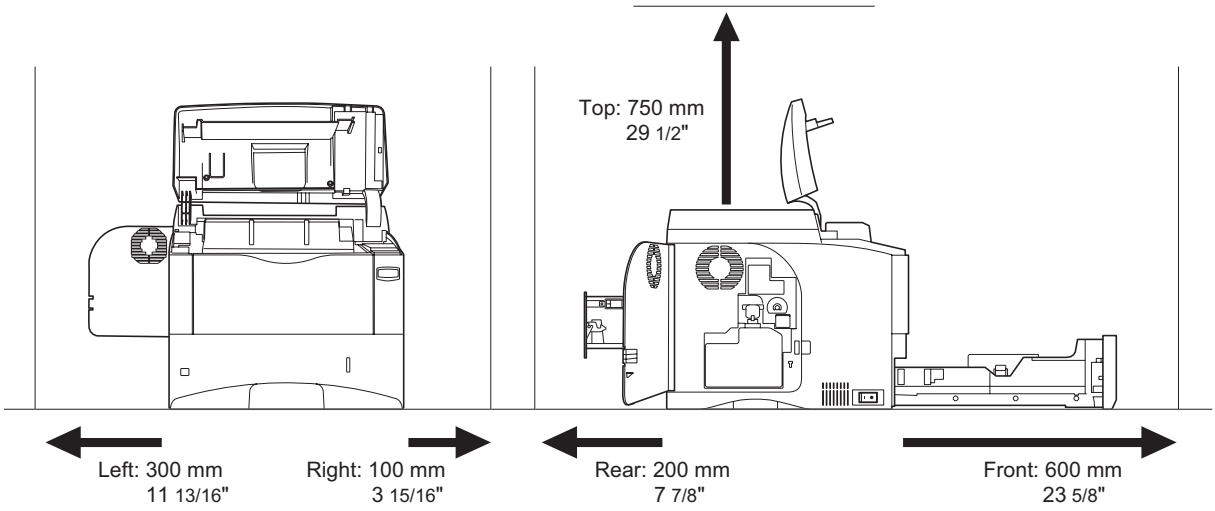

Figure 1-2-1

TONER+
www.tonerplus.com.ua

1-2-2 Unpacking and installation

(1) Installation procedure

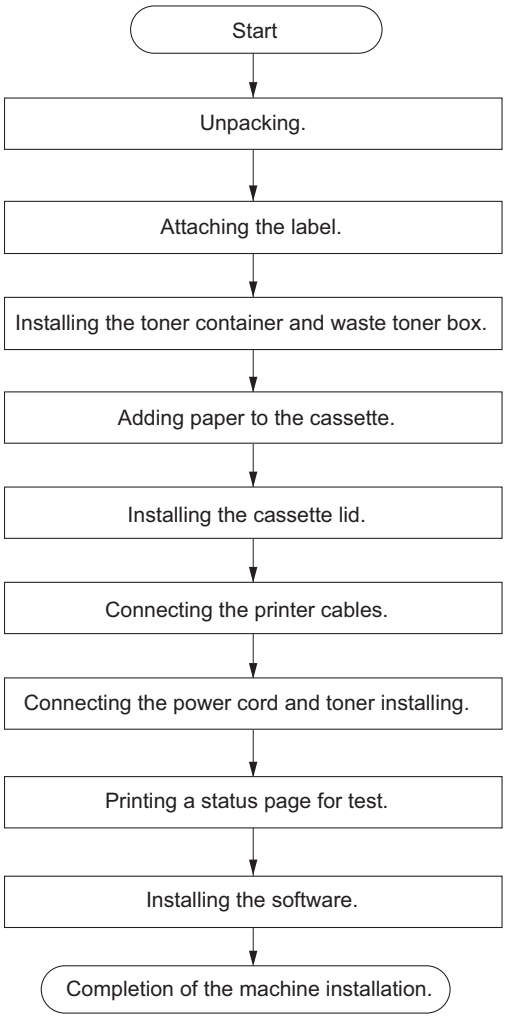

TONER
www.tonerplus.com.ua

Unpacking.

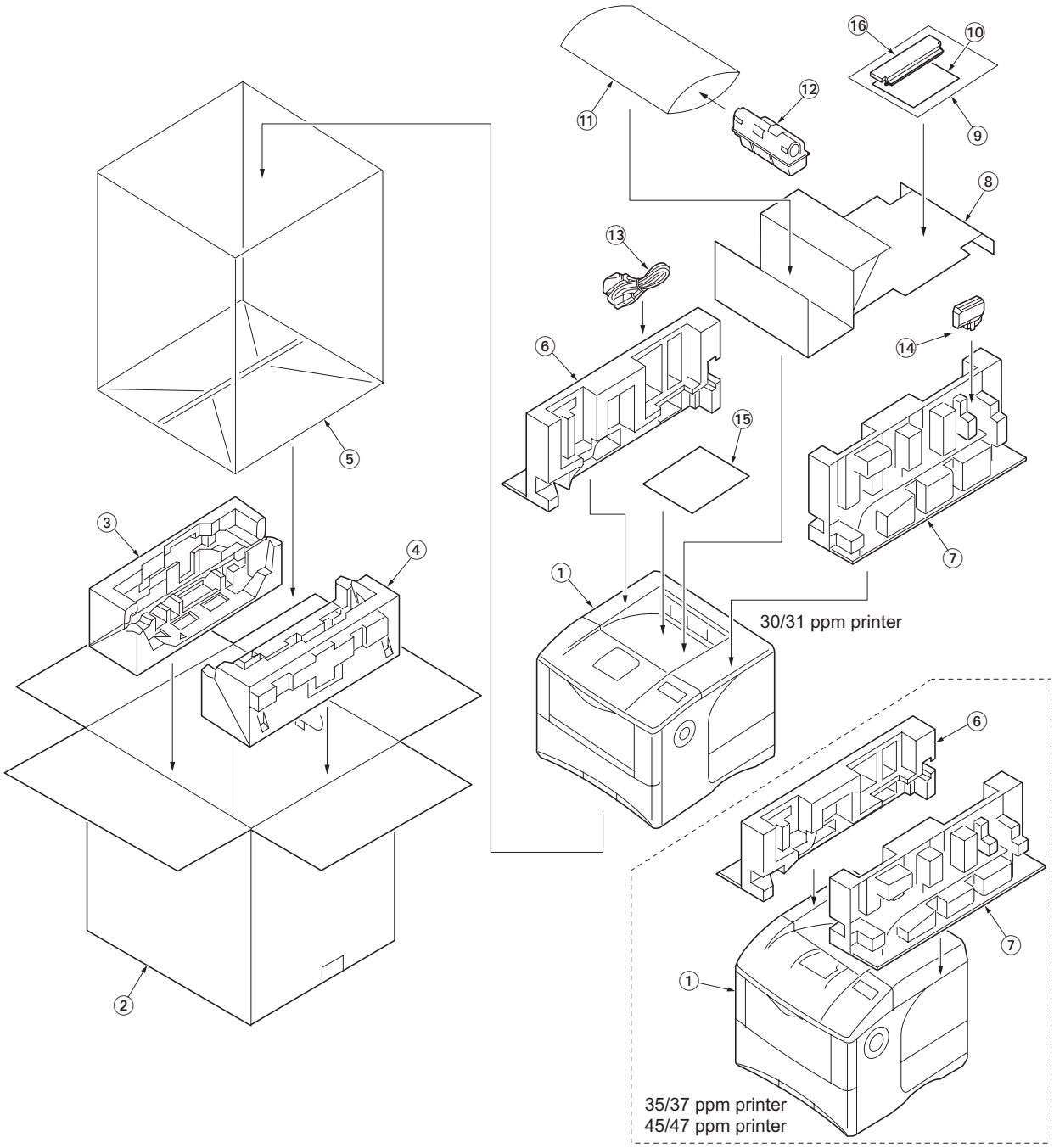

Figure 1-2-2 Unpacking

1. Printer
2. Outer case
3. Bottom pad L
4. Bottom pad R
5. Machine cover
6. Top pad L
7. Top pad R
8. Accessory spacer
9. Plastic bag
10. Installation guide etc.
11. Plastic bag
12. Toner container
13. Power cord
14. Waste toner box
15. Leaflet
    (30/35/45 ppm printer [EUR model] only)
16. Cassette lid

TONER
www.tonerplus.com.ua

Attaching the label.

1. Attach the included language label sheet on the indicator as shown in the figure.

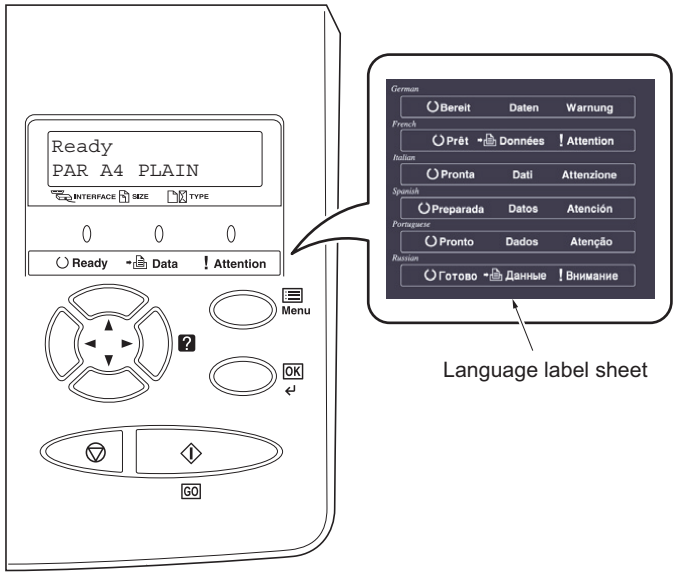

Figure 1-2-3

TONER
www.tonerplus.com.ua

Installing the toner container and waste toner box.

1. Open the top cover.
2. Remove the tape.

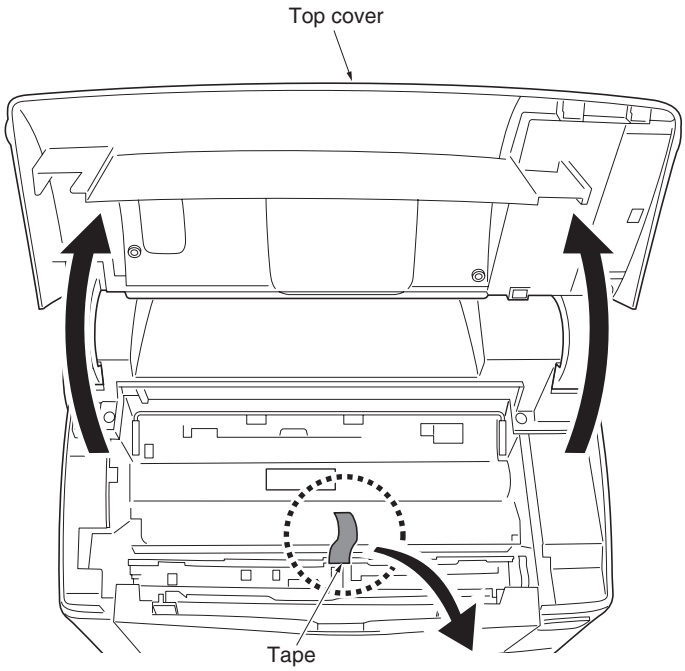

Figure 1-2-4

TONER
www.tonerplus.com.ua

3. Shake the new toner container at least 10 times as shown in the figure in order to distribute the toner evenly inside the container.
4. Carefully remove the protective seal (orange colored).

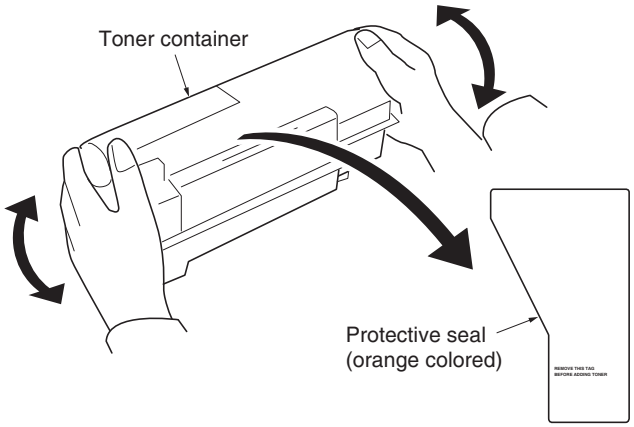

Figure 1-2-5

5. Install the toner container into the printer.
6. Push on the PUSH HERE marks on the toner container until the container clicks into place.
7. Close the top cover.

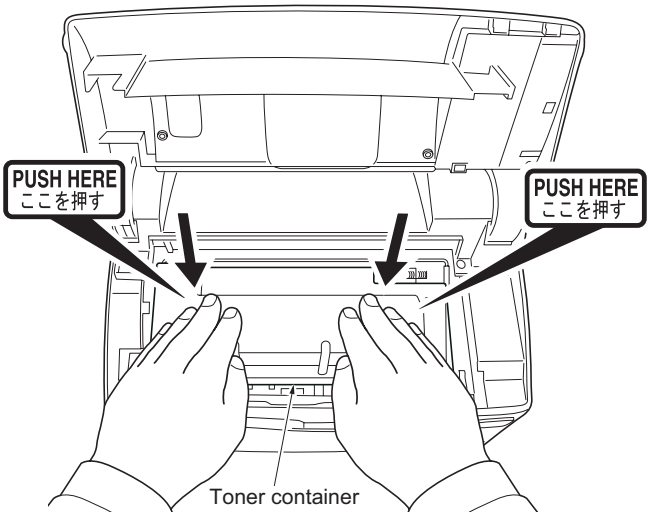

Figure 1-2-6

8. Open the cap of the waste toner box.
9. Open the left side cover.
10. Insert the new waste toner box as shown in the figure. When the box is set correctly, it will snap into place.
11. Close the left side cover.

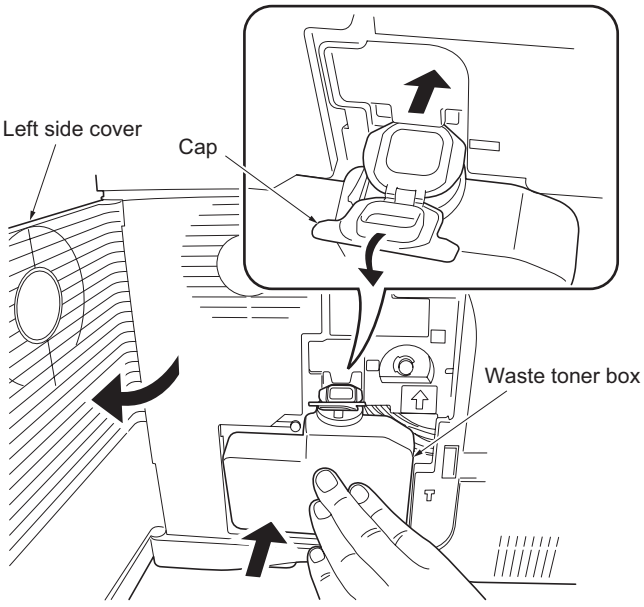

Figure 1-2-7

TONER
www.tonerplus.com.ua

Adding paper to the paper cassette.

1. Pull out the paper cassette.
2. Push the bottom plate down until it locks (30/31 ppm printer [EUR/USA model] only).

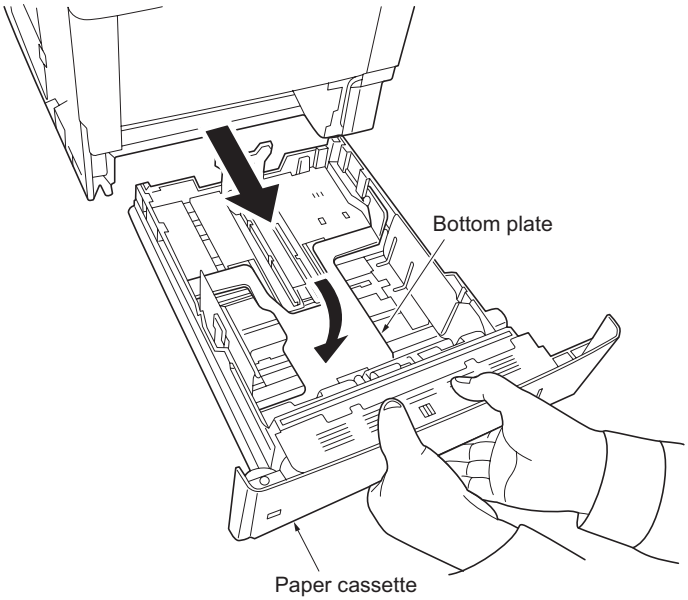

Figure 1-2-8

3. Turn the paper size dial so that the size of the paper you are going to use appears in the paper size window.

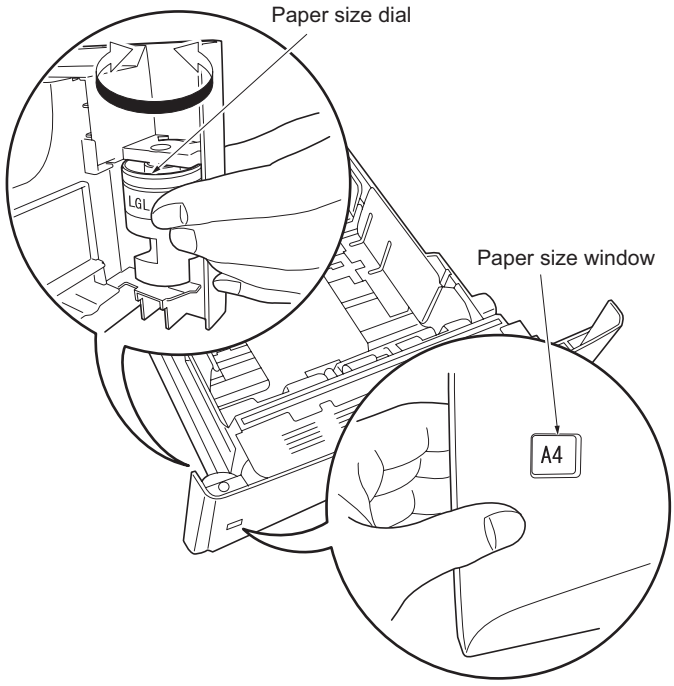

Figure 1-2-9

TONER
www.tonerplus.com.ua

4. Pull the release lever on the left side guide and slide to the desired paper size.

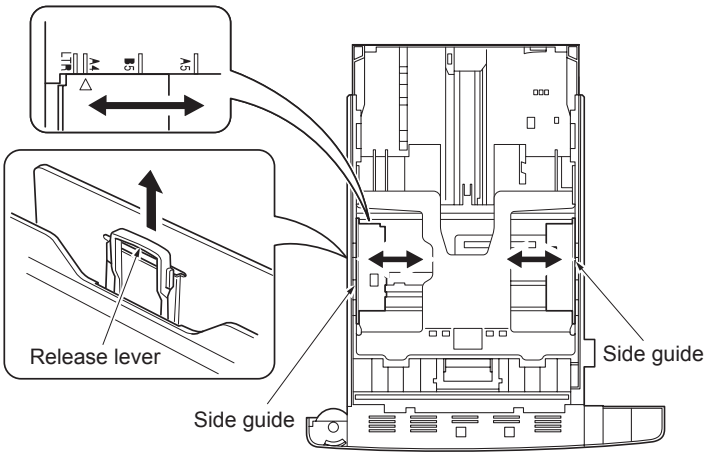

Figure 1-2-10

5. Pull the release lever and slide the paper stopper to the desired paper size.
   When using non-standard size paper, move the paper guides and paper stopper all the way out, insert the paper, then adjust the paper guides and paper stopper to the size of the paper. Adjust them so that they are in light contact with the paper.
6. Insert the paper cassette into the slot in the printer. Push it straight in as far as it will go.

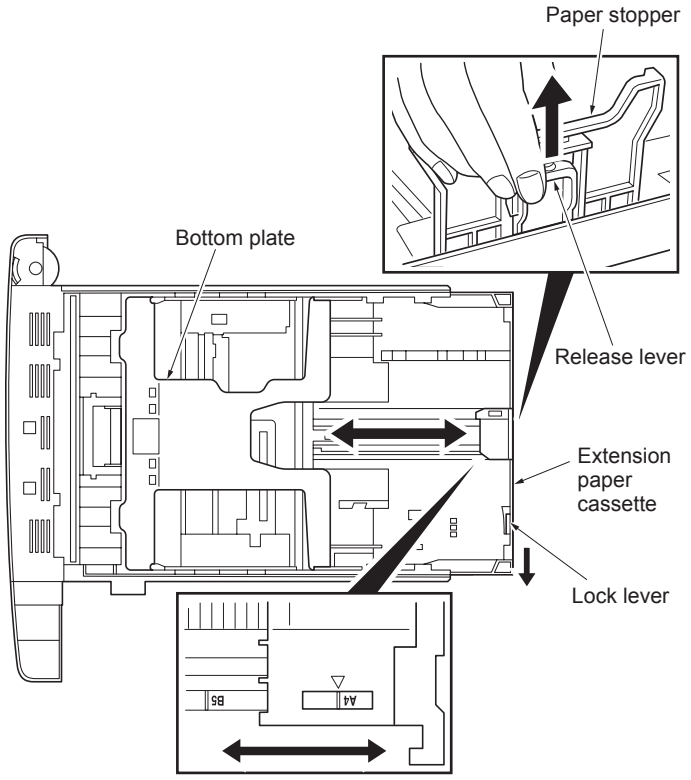

Figure 1-2-11

TONER
www.tonerplus.com.ua

Installing the casette lid.

1. Install the cassette lid.

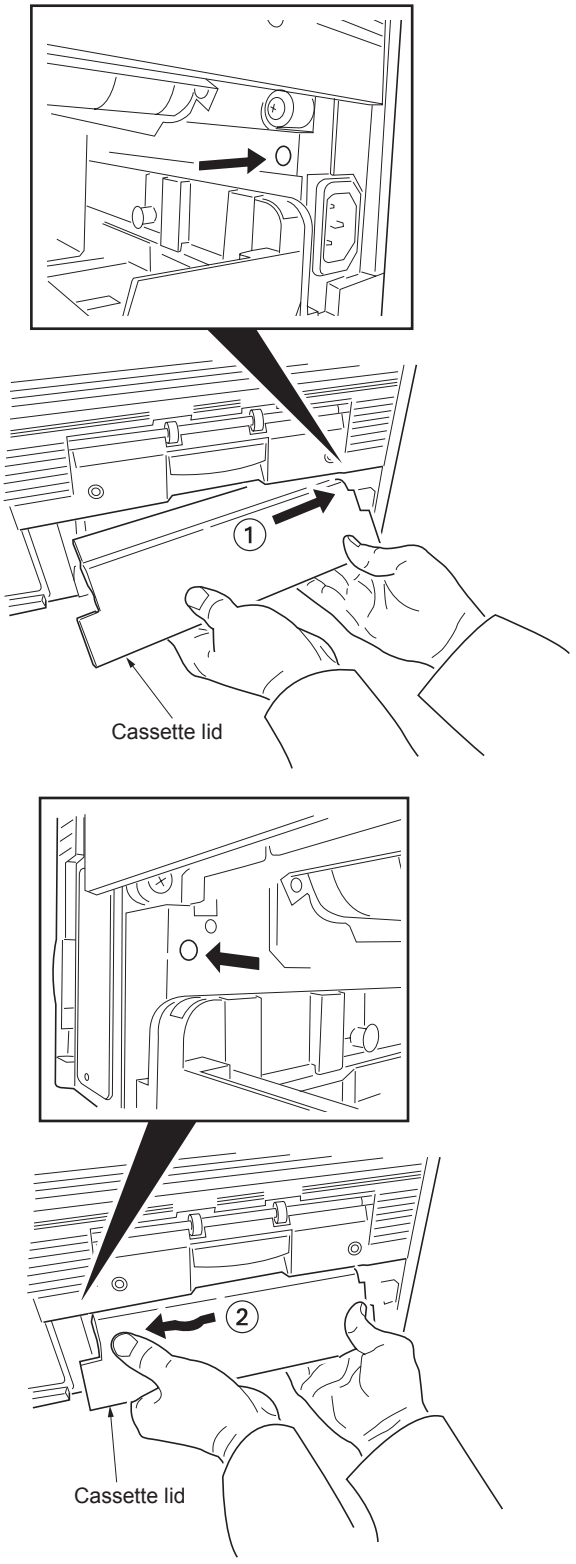

Figure 1-2-12

TONER
www.tonerplus.com.ua

Connecting the printer cables.

1. Connect the printer cable (parallel, USB or network*) to the printer and the PC.
   *: Remove the cap.

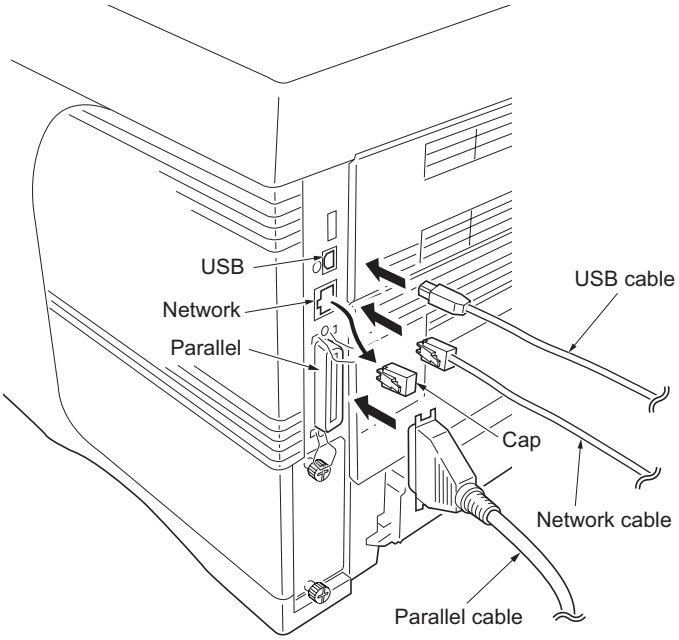

Figure 1-2-13

Connecting the power cord and toner installing.

1. Connect the power cord to the printer's AC inlet and the other end into a power outlet.
2. Turn the power switch to on (|).
   The message display should indicate [Self test]. When the printer is first switched on after installation, there will be a delay of approximately 15 minutes before the printer gets ready to print as the developer needs to be filled with toner. During this period, the message display shows [Please wait (Adding toner)].
   Wait until the READY indicator is also lit and the message display indicates [Ready]. The printer is ready to print.

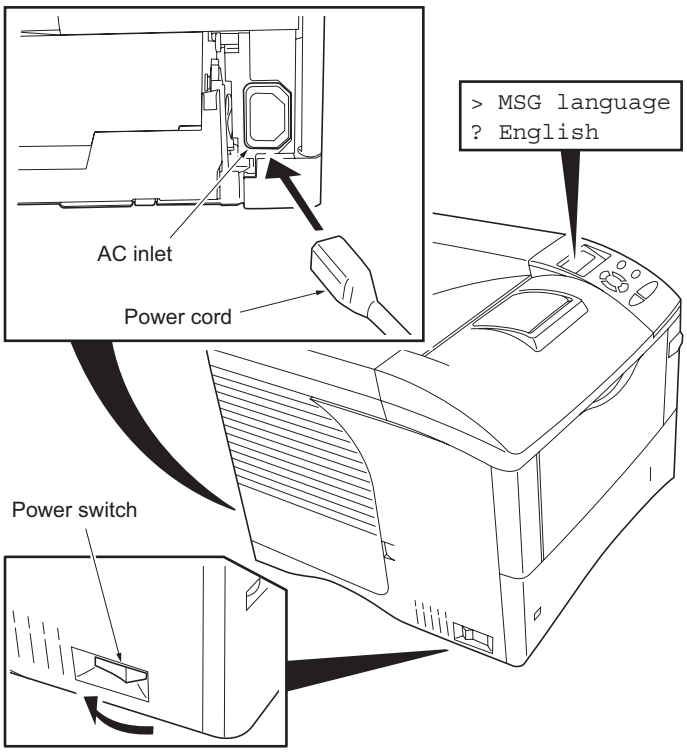

Figure 1-2-14

TONER
www.tonerplus.com.ua

Printing a status page for test.

1. Press the Menu key when [Ready] is displayed.
2. Press ▼ or ▲ key to display [Print Status Page].
3. Press OK key to display [Print Status Page?].
4. Press OK key. [Processing] will be displayed and the status page will be printed. When printing is complete, [Ready] will appear again.
5. Check to see if the status page is properly printed.

Installing the software.

1. Switch on the PC and activate Windows.
   If the Welcome to the Found New Hardware Wizard dialog box displays, select [Cancel].
2. Insert the CD-ROM (Software Library) supplied with the printer into the optical drive of the PC.The installation program launches and the License Agreement displays.
   If the installation program fails to launch, use Windows Explorer to access the CD-ROM and select [Setup.exe].
3. Select [View License Agreement] to read the information and select [Accept] to proceed.
4. Select [Install KX Driver] and follow the on screen instructions to complete the software installation.
   When the Select the Printer Port window is displayed, select a USB port (ex. USB001) in the list below the Use the following port radio button.
5. Once the installation is complete, the [Printer Installed Successfully] dialog box displays.
   When the test page prints correctly, printer setup is complete. For details on using the printer, refer to the operation guide.

Completion of the machine installation.

TONER
www.tonerplus.com.ua

1-2-3 Installing the expanding memory (optional)

<Procedure>

1. Power off the printer and unplug the printer power cord.
2. Open the right side cover.
3. Remove the screw and open the inner cover.

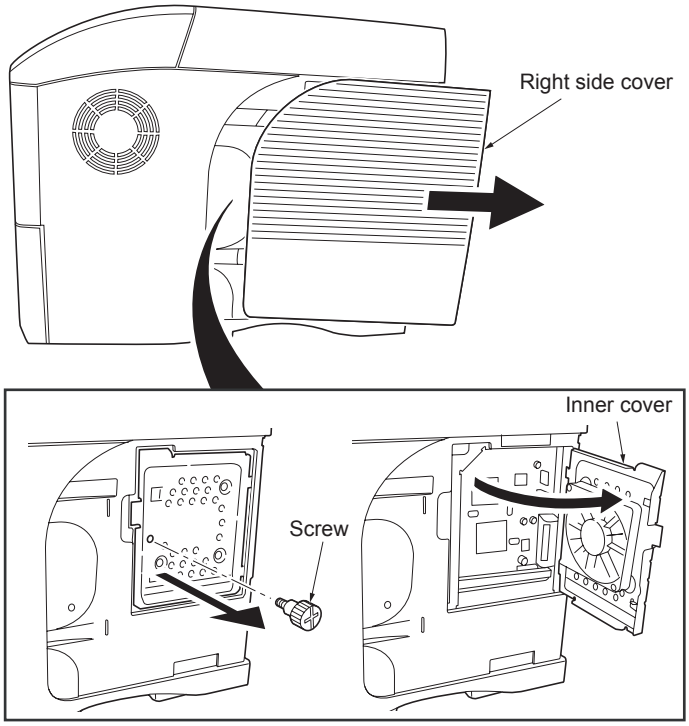

Figure 1-2-15

4. Push out the clamps on both ends of the memory socket.
5. Remove the memory from its package. Aligning the cutouts of the memory with the matching keys of the socket, carefully plug the memory into the memory socket until it clicks in place.
6. Push the two socket clamps to secure the memory.
7. Close and secure the inner cover by one screw.
8. Close the right side cover.

Testing the expanded memory

1. To verify that the memory is working properly, test it by printing a status page (refer to Printing a status page on page 2-15).

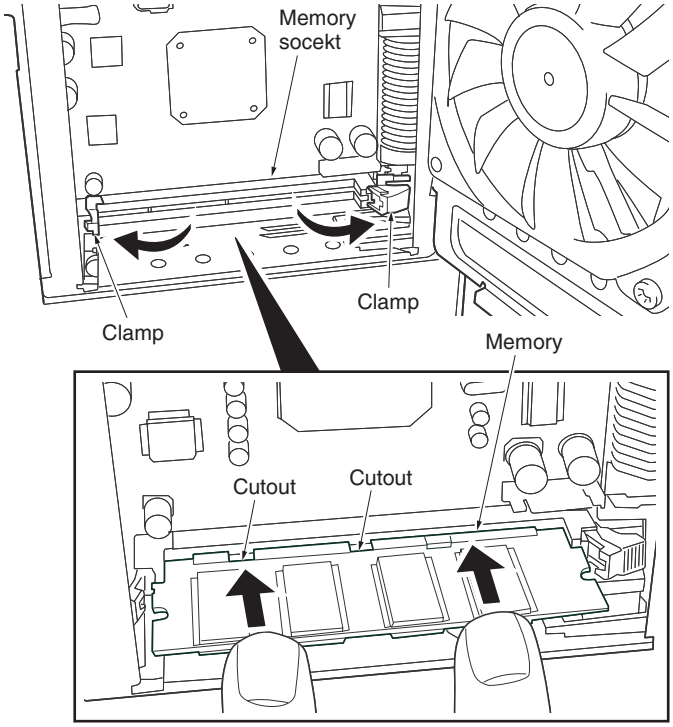

Figure 1-2-16

TONER+
www.tonerplus.com.ua

1-2-4 Installing the memory card or hard disk (optional)

<Procedure>

1. Turn off the printer and disconnect the power cord and printer cable.
2. Remove the two screws and then open the option interface slot cover.
3. Install the memory card or hard disk into the memory slot.
4. Close the option interface slot cover.

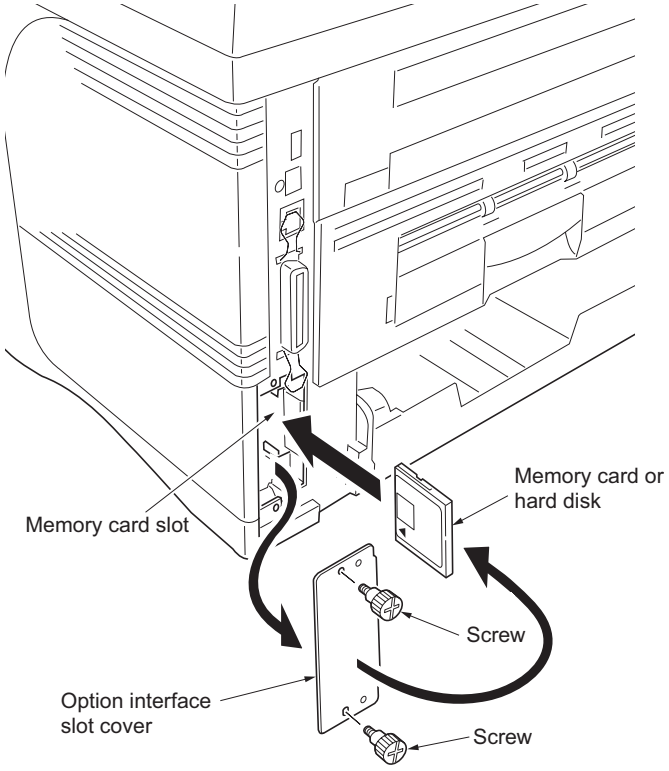

Figure 1-2-17

TONER
www.tonerplus.com.ua

1-2-5 Installing the network interface card (optional)

<Procedure>

1. Turn off the printer and disconnect the power cord and printer cable.
2. Remove the two screws and then open the option interface slot cover.
3. Install the network interface card to the option interface slot.
4. Secure the network interface card by two screws.

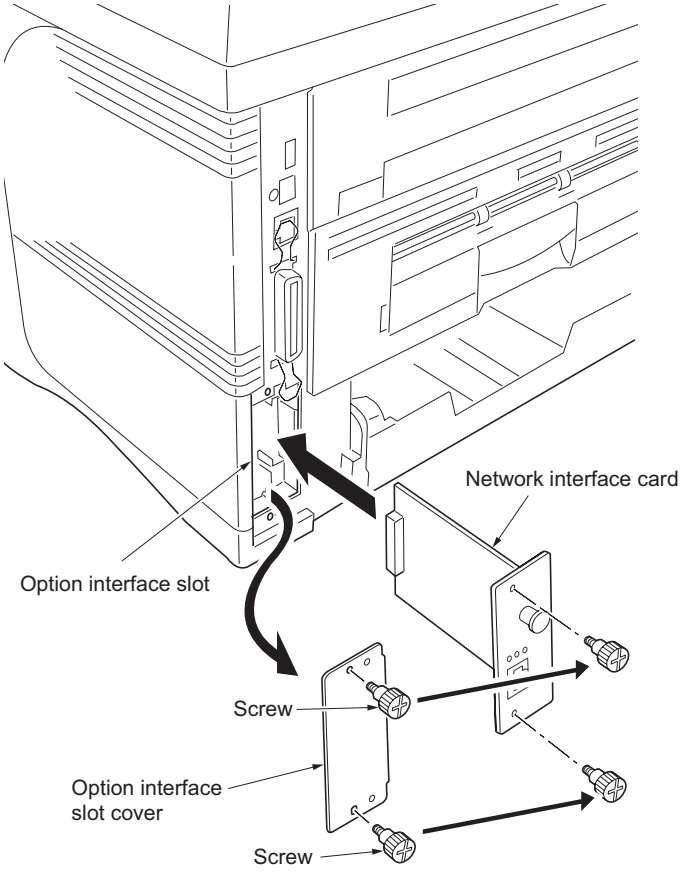

Figure 1-2-18

TONER
www.tonerplus.com.ua

1-2-6 Installing the network interface card (optional for 30/31 ppm printer [EUR/USA model] only)

<Procedure>

1. Turn off the printer and disconnect the power cord and printer cable.
2. Open the right side cover.
3. Remove the one screw and then open the inner cover.

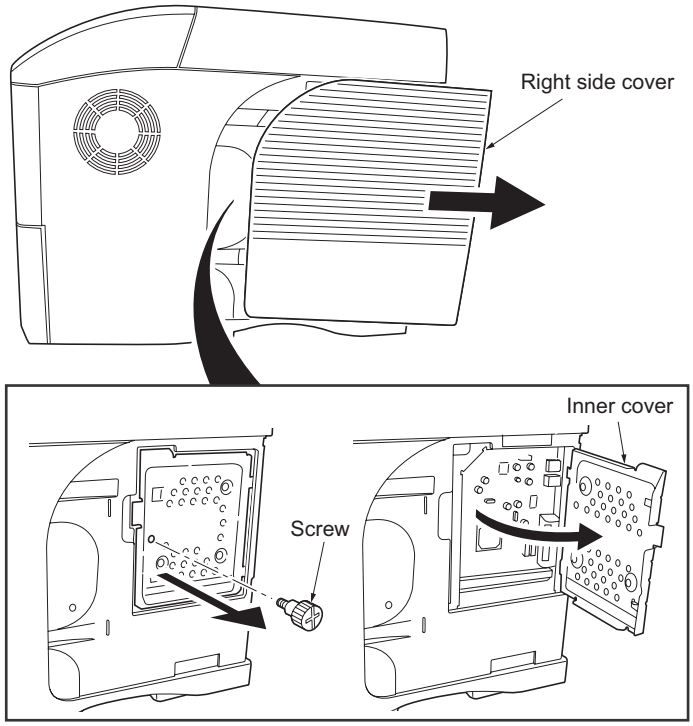

Figure 1-2-19

4. Remove the two screws and then open the option interface slot cover.

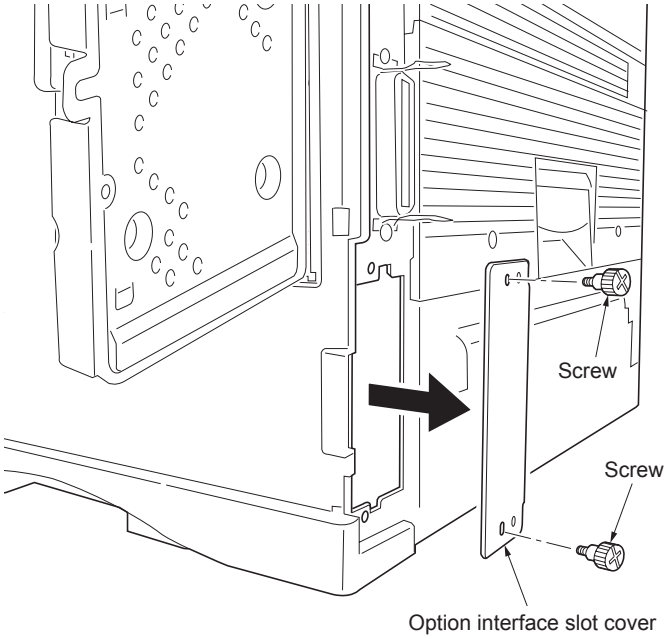

Figure 1-2-20

TONER
www.tonerplus.com.ua

5. Connect the relay cable connector to the network interface card connector.
6. Secure the relay cable to the clamp.

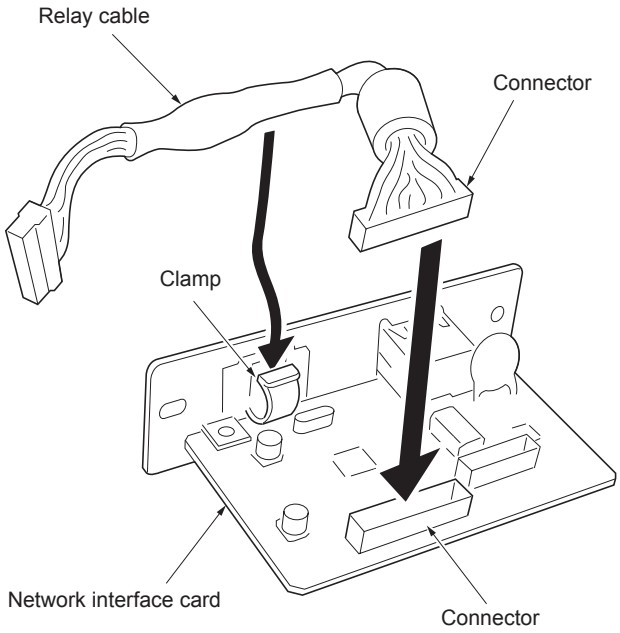

Figure 1-2-21

7. Install the network interface card to the option interface slot.
8. Put the relay cable connector through the hole.
9. Secure the network interface card by two screws.

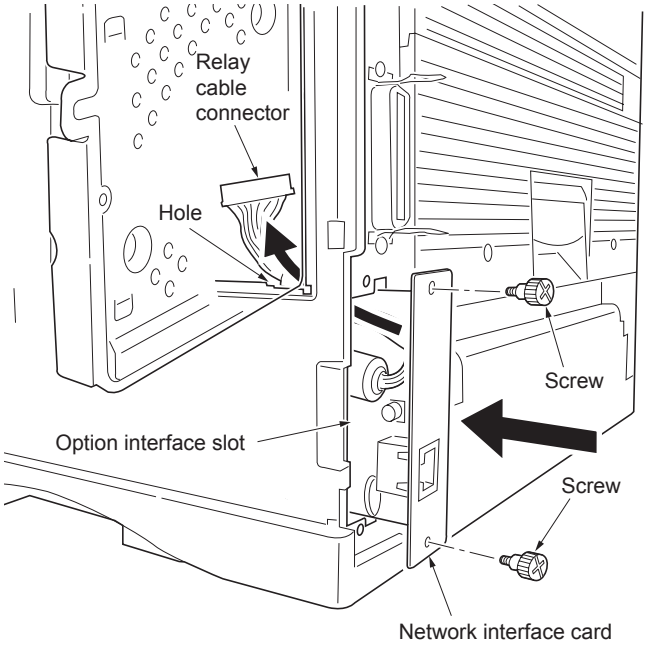

Figure 1-2-22

TONER
www.tonerplus.com.ua

10. Connect the relay cable connector to the main PWB's connector.
11. Close and secure the inner cover by one screw.
12. Close the right side cover.

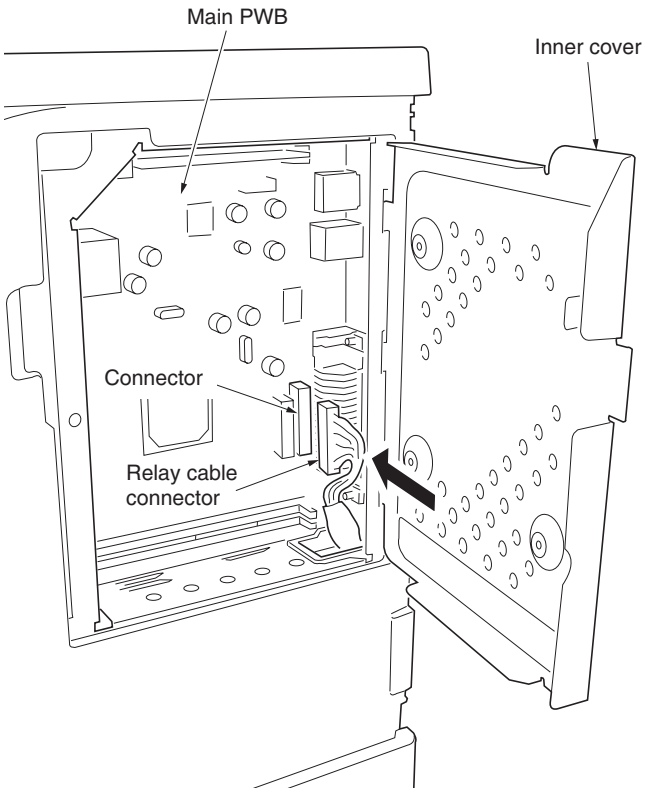

Figure 1-2-23

TONER
www.tonerplus.com.ua

This page is intentionally left blank.

TONER
www.tonerplus.com.ua

1-3-1 Maintenance mode

The printer is equipped with a maintenance function which can be used to maintain and service the machine.

(1) Executing a maintenance item

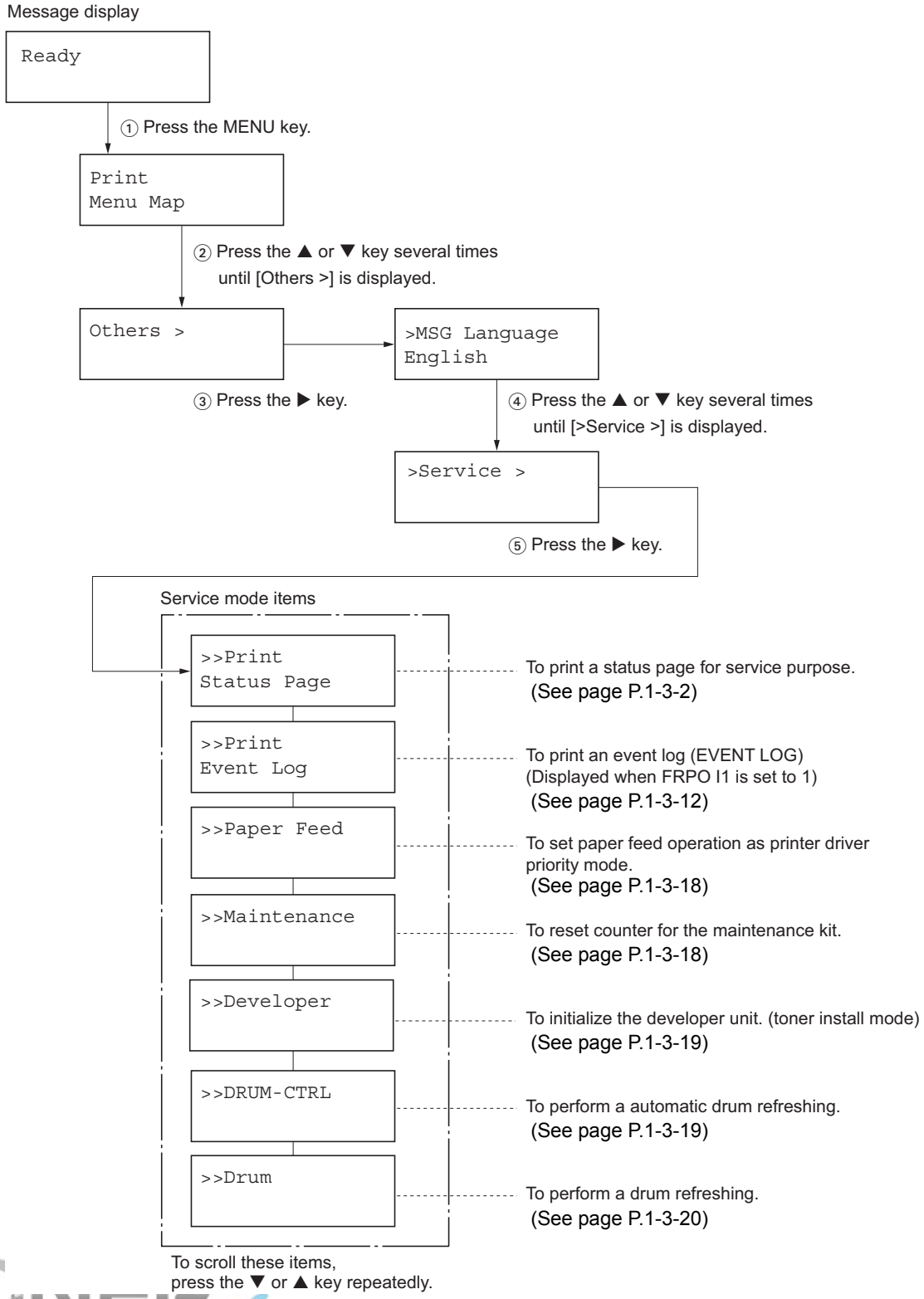

TONER
www.tonerplus.com.ua

Service items	Description
>>Print Status Page	**Printing a status page for service purpose** **Description** Prints a status page for service purpose. The status page includes various printing settings and service cumulative. **Purpose** To acquire the current printing environmental parameters and cumulative information. **Procedure** 1. Enter the service mode [>>Print Status Page]. 2. Press the OK key. [Print Status Page?] will be displayed. 3. Press the OK key. Two*1/Five*2 pages will be printed. (The second page includes service information. *1: 30/31 ppm printer (EUR/USA model) *2: 35/37 and 45/47 printer (EUR/USA model)

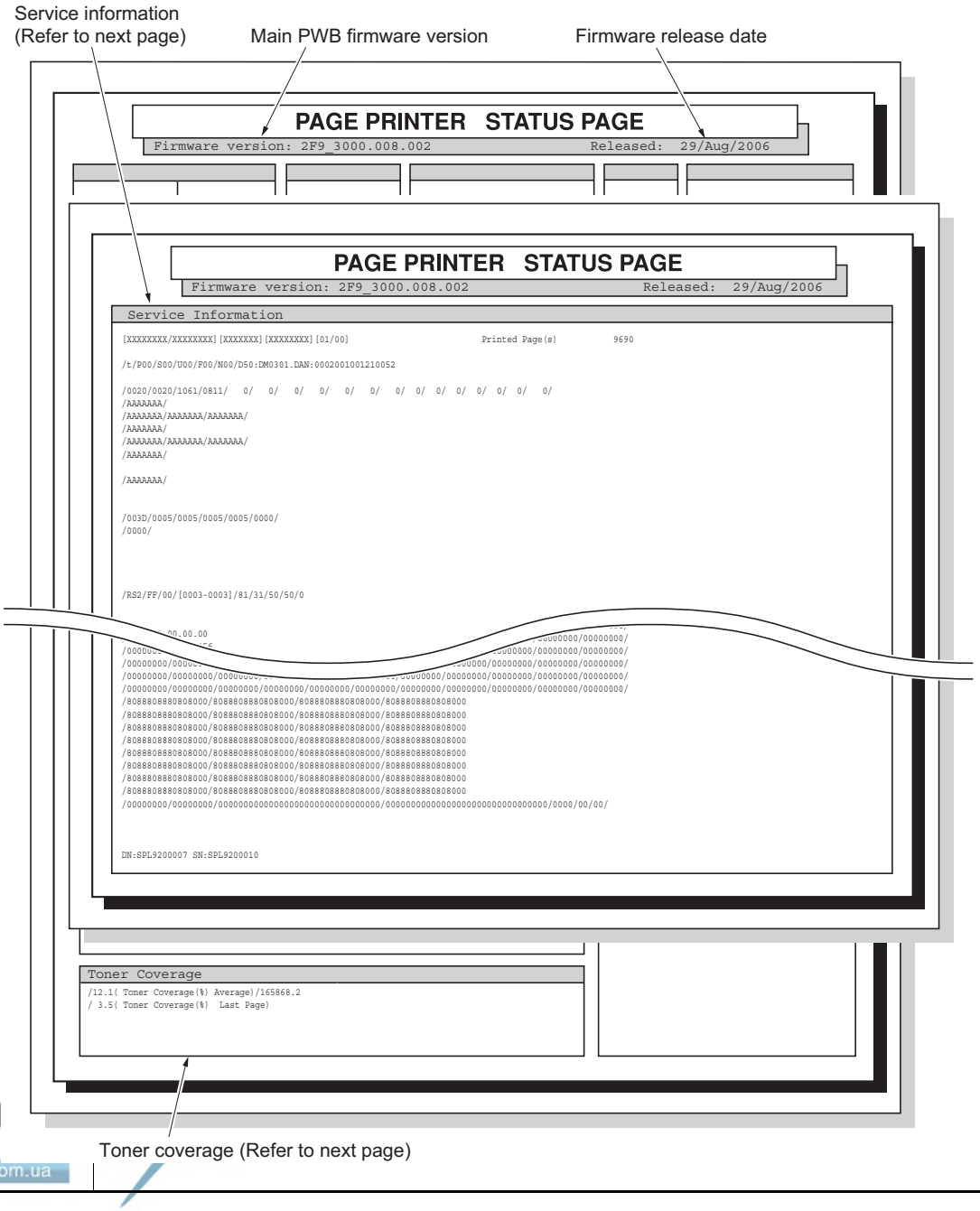

www.tonerplus.com.ua

Service items	Description

Toner coverage

Toner coverage (%) Number of pages printed coverted in reference to A4 or Letter size.

```
Toner Coverage
  / 3.1( Toner Coverage(%) Average)/379.6:
  / 1.1( Toner Coverage(%)  Last Page)
```

Toner coverage (%) of the page printed most previously.

Service information (30/31 ppm printer [EUR/USA model])

```
Service information

  [XXXXXXXX/XXXXXXXX] [XXXXXXX] [XXXXXXXX] [01/00]                    Printed pages(s)        9690
          ①              ②          ③        ④                                                ⑤
  /t/P00/S00/U00/F00/N00/D50:DM0301.DAN:0002001001210052
  ⑥ ⑦ ⑧ ⑨ ⑩ ⑪                ⑫
  /0020/0020/1061/0811/   0/   0/   0/   0/   0/  0/  0/  0/  0/
          ⑬                ⑭                ⑮          ⑯
⑰ /AAAAAAA/
⑱ /AAAAAAA/AAAAAAA/
⑲ /AAAAAAA/
⑳ /AAAAAAA/

㉑ /AAAAAAA/

  /003D/0000/
   ㉒   ㉓
㉔ /0000/

  /RS2/FF/00/[0003-0003]/81/31/50/50/0
   ㉕ ㉖ ㉗      ㉘      ㉙ ㉚ ㉛ ㉜ ㉝

  XXXXXXXXXXXXXXXX/00.00.00.00.00.00
         ㉞                ㉟
㊱ A:1234567890123456


㊲ /03030303/03030303/03030303/03000000/00000000/03030303/03030303/

㊳ SPD1:0203040508090A0B0C0D0F101112131415161718191A1B1C1D1E1F202122235E

㊴ /00/
㊵ /00000000000000000000000000000000/

㊶ 8088808880808000/8088808880808000/8088808880808000/8088808880808000
   8088808880808000/8088808880808000/8088808880808000/8088808880808000
   8088808880808000/8088808880808000/8088808880808000/8088808880808000
   8088808880808000/8088808880808000/8088808880808000/8088808880808000
   8088808880808000/8088808880808000/8088808880808000/8088808880808000
   8088808880808000/8088808880808000/8088808880808000/8088808880808000
   8088808880808000/8088808880808000/8088808880808000/8088808880808000
   8088808880808000/8088808880808000/8088808880808000/8088808880808000
㊷ 00000000/00000000/00000000000000000000000000000000/00000000000000000000000000000000/0000/00/00

  DN:SPL9200007  SN:SPL9200010
       ㊸              ㊹
```

Detail of service information (30/31 ppm printer [EUR/USA model])

TONER
www.tonerplus.com.ua

Service items	Description

No.	Items	Description
①	Engine ROM information	[Flash ROM version]
②	Operation panel ROM information	[Operation panel mask ROM version]
③	Boot ROM information	[Boot ROM version]
④	Software jumper switch information (hexadecimal) [First byte/Second byte (displayed in OEM model only)]	First byte bit 0 = 1: (Fixed) bit 1 = 0: Overseas, 1: Domestic (Japan) bit 2, 3 (Not used) bit 4 = 0: Kyocera, 1: OEM bit 5 = 0: For Europe, 1: For US bit 6 = 0: Non MICR mode, 1: MICR mode bit 7 (Not used) Second byte: Displayed in OEM model only
⑤	Total page	-
⑥	Toner install information	-
⑦	Parallel I/O information	-
⑧	Serial information	00: Not connected bit0: Framing error bit1: Overrun error bit2: Parity error
⑨	USB information	00: Not connected 01: Full-Speed 02: Hi-Speed
⑩	Operation panel lock status (displayed only when locked)	01: Partial lock 02: Full lock
⑪	NVRAM error (displayed only when any error has occurred)	01: ID error 02: Version error 03: Checksum error 04: NVRAM crush error
⑫	NVRAM download	00: Normal bit0: Font data bit1: Host data bit2: Macro data bit3: Program data bit4: Operation panel message data download (file name displayed) bit5: OEM data bit6: Web template data (version displayed) bit7: Error occurred
⑬	Printable area setting	/Top offset/Left offset/Page length/Page width
⑭	Left offset for each paper source	/MP tray/Paper cassette1/Paper cassette 2/Duplex (1/600 inches unit)
⑮	Top offset for each paper source	/MP tray/Paper cassette 2/Duplex (1/600 inches unit)
⑯	Offset for rotation	/Top offset/Left offset/ (1/600 inches unit)
⑰	Paper source life counter	/MP tray/
⑱	Paper source life counter	/Cassette 1 total/Paper feeder 1 (cassette 2) total/

www.tonerplus.com.ua

Service items	Description

No.	Items	Description
⑲	Paper source position counter	/Duplex/
⑳	Unit life counter	/Drum unit/
㉑	Maintenance kit life counter	-
㉒	Unit version	/Paper feeder 1/
㉓	Unit EEPROM error	bit0: Paper feeder 1 bit1: Reserved bit2: Reserved bit3: Duplex bit4: Reserved bit5: Bulk paper feeder bit6: Reserved bit7: Drum unit
㉔	Drum ID	-
㉕	Serial interface information	RS2: RS-232C RS4: RS-422A
㉖	Drum sensitivity information	-
㉗	Calibration table settings	Setting value (FRPO I4), Hexadecimal
㉘	Optional paper feeder/stacker information	1st 2 bytes bit0: MP tray bit1: Cassette 1 bit2: Paper feeder 1 bit3 to 6: Reserved bit7: Duplex bit8: Bulk paper feeder bit9: Envelope feeder bit10 to 15: Reserved 2nd 2 bytes bit0: Face up bit1: Face down bit2: Reserved bit3: Reserved bit4 to 15: Reserved
㉙	Operation panel message language	PMSG command setting (decimal)
㉚	Current temperature	0 to 50 °C/32 to 122 °F (in 1 °C/1.8 °F increment, "-" = Temperature/ humidity sensor is abnormal.)
㉛	Current humidity	25 to 90% RH (in 1% increment)
㉜	Absolute humidity	g/m^3
㉝	Number of rebooting for vertical distortion check	-
㉞	Network interface card (IB-30) version	-
㉟	MAC address	-
㊱	Fixed asset number	(maximum 16 characters)
㊲	Media type attributes	Media type setting value from 1 to 28 (paper weight) (unused media type are always 0x00.)
㊳	Memory SPD information (slot 1)	2 to 6 bytes, 8 to 36 bytes, 94 to 95 bytes (total 32 bytes)
㊴	Drum status information	-
㊵	Drum sensitivity information	-

TONER
www.tonerplus.com.ua

Service items	Description

No.	Items	Description
㊶	Engine parameter	Hexadecimal, 256 bytes
㊷	Toner container information	-
㊸	Drum serial number	-
㊹	Machine serial number	-

NOTE:

Code conversion

A	B	C	D	E	F	G	H	I	J
0	1	2	3	4	5	6	7	8	9

TONER
www.tonerplus.com.ua

Service items	Description
	Service information (35/37 and 45/47 ppm printer [EUR/USA] model)

Service information

```
[XXXXXXXX/XXXXXXXX] [XXXXXXX] [XXXXXXXX] [01/00]                    Total page          9690
        ①              ②         ③        ④                                  ⑤
/t/P00/S00/U00/F00/N00/D50:DM0301.DAN:0002001001210052
⑥ ⑦ ⑧ ⑨ ⑩ ⑪              ⑫
/0020/0020/1061/0811/   0/   0/   0/   0/   0/   0/   0/  0/  0/  0/  0/  0/  0/  0/
        ⑬                        ⑭                        ⑮                ⑯
⑰ /AAAAAAA/
⑱ /AAAAAAA/AAAAAAA/AAAAAAA/
⑲ /AAAAAAA/
⑳ /AAAAAAA/AAAAAAA/AAAAAAA/
㉑ /AAAAAAA/

㉒ /AAAAAAA/


/003D/0005/0005/0005/0005/0000/
          ㉓              ㉔
/0000/
 ㉕




/RS2/FF/00/[0003-0003]/81/31/50/50/0
 ㉖ ㉗ ㉘     ㉙      ㉚ ㉛ ㉜ ㉝ ㉞

㉟ 00.00.00.00.00.00
㊱ A:1234567890123456




㊲ /03030303/03030303/03030303/03000000/00000000/03030303/03030303/

㊳ SPD1:0203040508090A0B0C0D0F101112131415161718191A1B1C1D1E1F202122235E

㊴ /00/
/00000000000000000000000000000000/00000000000000000000000000000000
                ㊵                              ㊶
㊷ /0/0000000000000000000000000000000000000000000000000000000000000000
㊷ /0/0000000000000000000000000000000000000000000000000000000000000000
```

45/47 ppm printer (EUR/USA model) only.

TONER
www.tonerplus.com.ua

Service items	Description

```
㊸ /0000/0000/
㊹ /00000000/00000000/00000000/00000000/00000000/00000000/00000000/00000000/00000000/00000000/00000000/
  
```

Service items	Description

No.	Items	Description
④	Software jumper switch information (hexadecimal) [First byte/Second byte (displayed in OEM mode only)]	First byte bit 0 = 1: (Fixed) bit 1 = 0: Overseas, 1: Domestic (Japan) bit 2, 3 (Not used) bit 4 = 0: Kyocera, 1: OEM bit 5 = 0: For Europe, 1: For US bit 6 = 0: Non MICR mode, 1: MICR mode bit 7 (Not used) Second byte: Displayed in OEM mode only
⑤	Total page	-
⑥	Toner install information	-
⑦	Parallel I/O information	-
⑧	Serial information	00: Not connected bit0: Framing error bit1: Overrun error bit2: Parity error
⑨	USB information	00: Not connected 01: Full-Speed 02: Hi-Speed
⑩	Operation panel lock status (displayed only when locked)	01: Partial lock 02: Full lock
⑪	NVRAM error (displayed only when any error has occurred)	01: ID error 02: Version error 03: Checksum error 04: NVRAM crush error
⑫	NVRAM download	00: Normal bit0: Font data bit1: Host data bit2: Macro data bit3: Program data bit4: Operation panel message data download (file name displayed) bit5: OEM data bit6: Web template data (version displayed) bit7: Error occurred
⑬	Printable area setting	/Top offset/Left offset/Page length/Page width
⑭	Left offset for each paper source	/MP tray/Paper cassette1/Paper cassette 2/Paper cassette 3/ Paper cassette 4/Envelope feeder/Duplex (1/600 inches unit)
⑮	Top offset for each paper source	/MP tray/Paper cassette2/Paper cassette 3/Paper cassette 4/Duplex (1/600 inches unit)
⑯	Offset for rotation	/Top offset/Left offset/ (1/600 inches unit)
⑰	Paper source life counter	/MP tray/
⑱	Paper source life counter	/Cassette 1 total /Paper feeder 1 (Cassette 2) total /Paper feeder 2 (Cassette 3) total/
⑲	Paper source life counter	/Paper feeder 3 (Cassette 4) total/

TONER
www.tonerplus.com.ua

Service items	Description

No.	Items	Description
⑳	Paper source position counter	/Duplex/Bulk paper feeder/Envelope feeder/
㉑	Unit life counter	/Drum unit/
㉒	Maintenance kit life counter	-
㉓	Unit version	/Paper feeder 1/Paper feeder 2/Paper feeder 3 /Envelope feeder/bulk paper feeder/
㉔	Unit EEPROM error	bit0: Paper feeder 1 bit1: Paper feeder 2 bit2: Paper feeder 3 bit3: Duplex bit4: Reserved bit5: Bulk paper feeder bit6: Reserved bit7: Drum unit
㉕	Drum ID	
㉖	Serial interface information	RS2: RS-232C RS4: RS-422A
㉗	Drum sensitivity information	
㉘	Calibration table settings	Setting value (FRPO I4), Hexadecimal
㉙	Optional paper feeder/stacker information	1st 2 bytes bit0: MP tray bit1: Cassette 1 bit2 to 4: Paper feeder 1 to 3 bit3 to 6: Reserved bit7: Duplex bit8: Bulk paper feeder bit9: Envelope feeder bit10 to 15: Reserved 2nd 2 bytes bit0: Face up bit1: Face down bit2: Reserved bit3: Reserved bit4 to 15: Reserved
㉚	Operation panel message language	PMSG command setting (decimal)
㉛	Current temperature	0 to 50 °C/32 to 122 °F (in 1 °C/1.8 °F increment, “-” = Temperature/humidity sensor is abnormal.)
㉜	Current humidity	25 to 90% RH (in 1% increment)
㉝	Absolute humidity	g/m^3
㉞	Number of rebooting for vertical distortion check	-
㉟	MAC address	-
㊱	Fixed asset number	(maximum 16 characters)
㊲	Media type attributes	Media type setting value from 1 to 28 (paper weight) (unused media type are always 0x00.)
㊳	Memory SPD information (slot 1)	2 to 6 bytes, 8 to 36 bytes, 94 to 95 bytes (total 32 bytes)
㊴	Drum status information	-
㊵	Drum surface potential information	-
㊶	Drum sensitivity information	-

TONER
www.tonerplus.com.ua

Service items	Description

No.	Items	Description
㊷	LSU luminous power distribution information	/APC PWB table information (1 byte)/Actual data (32 bytes)
㊸	2-beam correction delay quantity	/Beam A/Beam B/
㊹	DRT correction coefficient	4 bytes × 11 × 23 groups
㊺	Engine parameter	Hexadecimal, 256 bytes
㊻	Toner container information	-
㊼	Drum serial number	-
㊽	Machine serial number	-

NOTE:

Code conversion

A	B	C	D	E	F	G	H	I	J
0	1	2	3	4	5	6	7	8	9

TONER
www.tonerplus.com.ua

Service items	Description
>>Print Event Log	**Printing an event log (EVENT LOG)** **Description** Prints the history of paper misfeeds and self-diagnostic errors including up to 16 items from the latest occurrence of such an error. (If the number of errors exceeds 16, errors will be deleted sequentially from the oldest one.) **Purpose** To allow machine malfunction analysis based on the frequency of paper misfeeds and self diagnostic errors. **Procedure** 1. Enter the service mode [>>Print Event log]. 2. Press the OK key. [>>Print Event Log?] will be displayed. 3. Press the OK key. A sheet of event log will be printed.

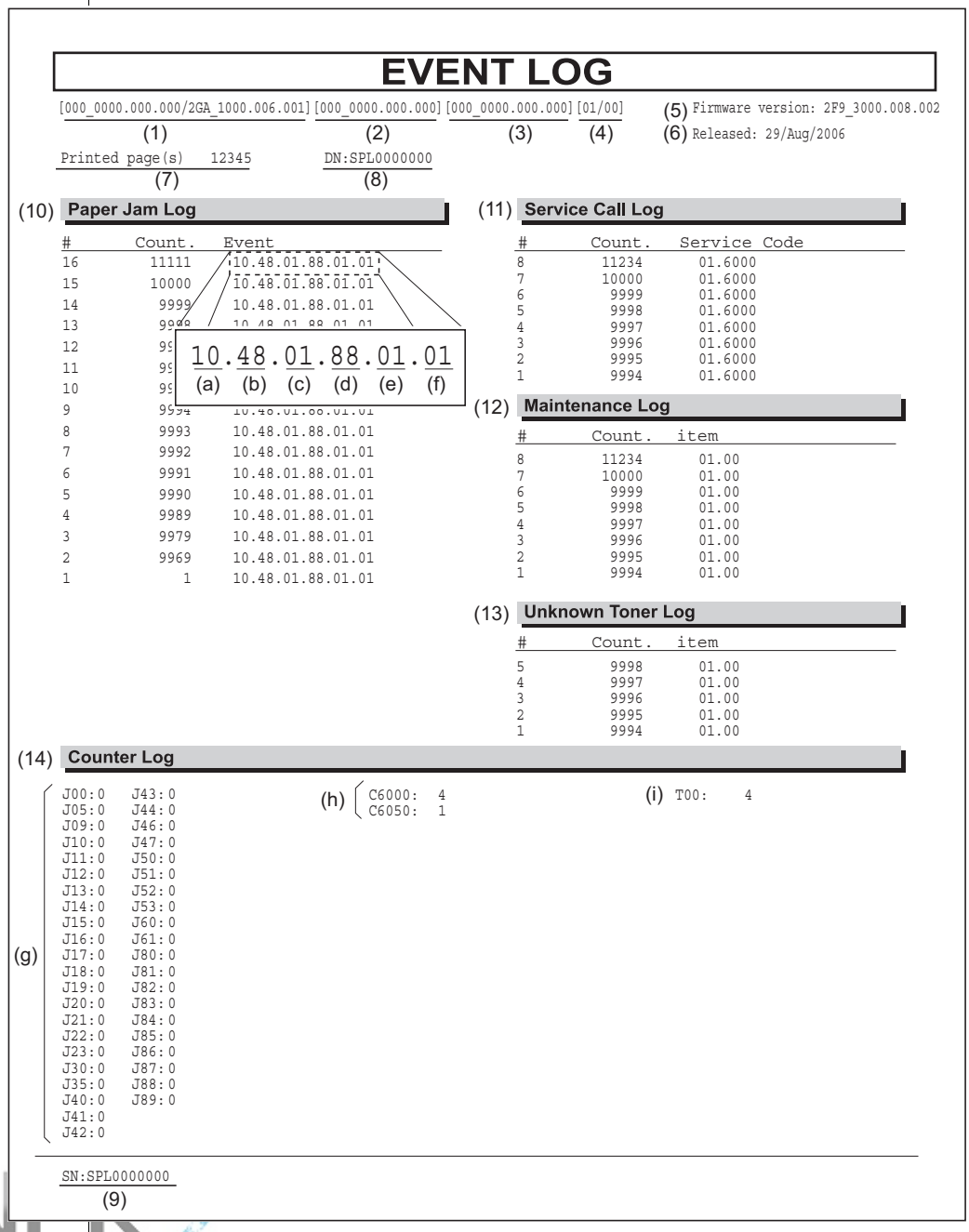

Figure 1-3-2

TONER
www.tonerplus.com.ua

Service items	Description

Detail of event log (EVENT LOG) information

No.	Items	Description		
(1)	Engine PWB mask version	[Engine mask version/Engine software version]		
(2)	Operation panel PWB mask version	-		
(3)	BROM version	-		
(4)	Software jumper switch information (hexadecimal) [First byte/Second byte (displayed in OEM mode only)]	First byte bit 0 = 1: (Fixed) bit 1 = 0: Overseas, 1: Domestic (Japan) bit 2, 3 (Not used) bit 4 = 0: Kyocera, 1: OEM bit 5 = 0: For Europe, 1: For US bit 6 = 0: Non MICR mode, 1: MICR mode bit 7 (Not used) Second byte: Displayed in OEM mode only		
(5)	Main PWB mask version	-		
(6)	Main PWB firmware release date	-		
(7)	Total page counter	-		
(8)	Drum serial number	-		
(9)	Printer serial number	-		
(10)	Paper Jam Log	# Remembers 1 to 16 of occurrence. If the occurrence of the previous paper jam is less than 16, all of the paper jams are logged. When the occurrence excessed 16, the oldest occurrence is removed.	Count. The total page count at the time of the paper jam.	Event Log code (2 digit, hexadecimal, 6 categories) (a) Cause of a paper jam (b) Position of paper jam (c) Paper source (d) Paper size (e) Paper type (f) Paper exit Refer to the next page for the details of each log code.

TONER
www.tonerplus.com.ua

Service items	Description

No.	Items	Description
(10) cont.		(a) Cause of paper jam 10: Paper does not arrive at the registration sensor. (MP tray) [42] 10: Paper does not arrive at the registration sensor. (Cassette 1) [31] 10: Paper does not arrive at the registration sensor. (Cassette 2) [31] 10: Paper does not arrive at the registration sensor. (Cassette 3) [31] 10: Paper does not arrive at the registration sensor. (Cassette 4) [31] 10: Paper does not arrive at the registration sensor. (Duplex conveying) [49] 11: Paper does not pass the registration sensor. [48] 12: Paper remains at the registration sensor when power is turned on. [48] 20: Paper does not arrive at the exit sensor. [48] 21: Paper does not pass the exit sensor. [47] 22: Paper remains at the exit sensor when power is turned on. [47] 30: Paper does not arrive at the paper feeder 1 paper feed sensor. (Cassette 2) [32] 30: Paper does not arrive at the paper feeder 1 paper feed sensor. (Cassette 3) [33] 30: Paper does not arrive at the paper feeder 1 paper feed sensor. (Cassette 4) [33] 31: Paper does not pass the paper feeder 1 paper sensor. [32] 32: Paper remains at the paper feeder 1 paper feed sensor when power is turned on. [32] 40: Paper does not arrive at the paper feeder 2 paper feed sensor. (Cassette 3) [33] 40: Paper does not arrive at the paper feeder 2 paper feed sensor. (Cassette 4) [34] 41: Paper does not pass the paper feeder 2 paper sensor. [33] 42: Paper remains at the paper feeder 2 paper feed sensor when power is turned on. [33] 50: Paper does not arrive at the paper feeder 3 paper feed sensor. (Cassette 4) [34] 51: Paper does not pass the paper feeder 3 paper sensor. [34] 52: Paper remains at the paper feeder 3 paper feed sensor when power is turned on. [34] A1: Paper does not arrive at the duplex sensor. (Rear unit) [47] A2: Paper does not pass the duplex sensor. (Rear unit) [47] A3: Paper does not arrive at the duplex jam sensor. (Rear unit) [49] A4: Paper does not pass the duplex jam sensor. (Rear unit) [49] A5: Paper remains at the duplex jam sensor when power is turned on. [49] E0: Paper misfeed occurs due to forced stop when an error occurs during printing. (such as opening of a cover) [00] E1: The length of paper is shorter than designated for the paper cassette. [47] E2: A5 lengthwise paper has been fed despite the paper cassette is set to A4 width wise (see reference 1 below). [00] E3: Paper cassette 1 was opened in the middle of duplex printing (see reference 2 below). [49] F0: Paper does not arrive at the face down tray paper full sensor. [47] F1 to FE: Paper misfeed by another cause. [00] Note: Values (hexadecimal) within [ ] indicate paper misfeed locations. Reference 1: Widthwise A4 size and lengthwise A5 are identical in length, however, the fuser temperature differs. Detecting the fuser temperature depending on this temperature difference allows detection of paper misfeed due to a wrong paper size. Reference 2: The DU cover of the duplex paper conveying section is designed to operate as being held against the main unit as the paper cassette is installed. (Paper feeding fails when the paper cassette is not properly installed because of the resultant space between the DU cover and the main unit.) Therefore, paper jam occurs if the paper cassette is opened in the middle of duplex printing.

TONER
www.tonerplus.com.ua

Service items	Description

No.	Items	Description
(10) cont.		(b) Detail of jam location

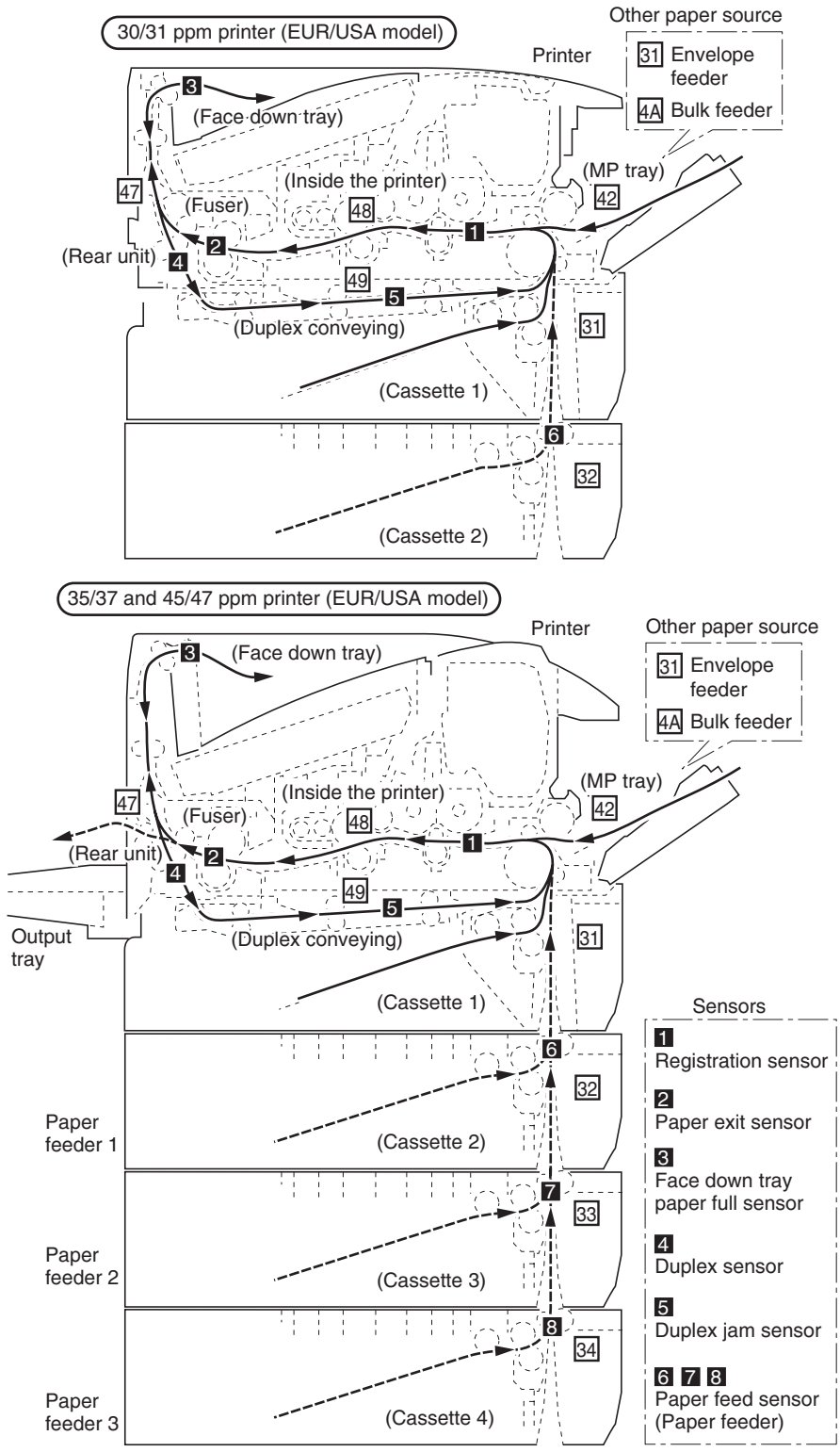

www.tonerplus.com.ua

Service items	Description

No.	Items	Description		
(10) cont.		(c) Detail of paper source (Hexadecimal) 00: MP tray 01: Paper cassette 1 (printer) 02: Paper cassette 2 (paper feeder 1) 03: Paper cassette 3 (paper feeder 2) 04: Paper cassette 4 (paper feeder 3) 05: Reserved 06: Reserved 07: Reserved 08: Bulk paper feeder 09; Envelope feeder		
		(d) Detail of paper size (Hexadecimal) 01: Monarch 02: Business 03: International DL 04: International C5 05: Executive 06: Letter-R 86: Letter-E 07: Legal 08: A4R 88: A4E 09: B5R 89: B5E 0A: A3 (Not supported) 0B: B4 0C: Ledger (Not supported) 0D: A5R 8D: A5E 0E: A6 0F: B6 10: Commercial #9 11: Commercial #6 12: ISO B5 13: Custom size 1E: C4 1F: Postcard 20: Reply-paid postcard 21: Oficio II 22: Special 1 23: Special 2 24: A3 wide 25: Ledger wide 26: Full bleed paper (12 × 8) 27: 8K 28: 16K-R A8: 16K-E 32: Statement-R B2: Statement-E 33: Folio 34: Western type 2 35: Western type 4		
		(e) Detail of paper type (Hexadecimal) 01: Plain 02: Transparency 03: Preprint 04: Labels 05: Bond 06: Recycle 07: Vellum 08: Rough 09: Letter head 0A: Color 0B: Prepunched 0C: Envelope 0D: Cardstock 0E: Coated 0F: 2nd side 10: Media 16 11: High quality 15: Custom 1 16: Custom 2 17: Custom 3 18: Custom 4 19: Custom 5 1A: Custom 6 1B: Custom 7 1C: Custom 8		
		(f) Detail of paper exit location (Hexadecimal) 01: Face down tray 02: Face up tray 03: Reserved 04: Reserved 05: Reserved 0B: Reserved 0C: Reserved 0D: Reserved 0E: Reserved 15: Reserved 16: Reserved 1F: Reserved 20: Reserved 29: Reserved 2A: Reserved 33: Reserved 34: Reserved 3D: Reserved 3E: Reserved 47: Reserved 48: Reserved		
(11)	Service Call (Self diagnostic error) Log	# Remembers 1 to 8 of occurrence of self diagnostics error. If the occurrence of the previous diagnostics error is less than 8, all of the diagnostics errors are logged.	Count. The total page count at the time of the self diagnostics error.	Service Code Self diagnostic error code (See page P.1-4-2) Example 01.6000 01 means a self-diagnostic error; 6000 means a self diagnostic error code.

www.tonerplus.com.ua

Service items	Description

No.	Items	Description		
(12)	Maintenance Log NOTE: It is not logged if 100 or more counts are not added to the count at the last occurrence of replacement.	# Remembers 1 to 8 of occurrence of replacement. If the occurrence of the previous replacement of toner container is less than 8, all of the occurrences of replacement are logged.	Count. The total page count at the time of the replacement of the toner container. This is virtually logged as the occurrence of the “Toner Empty” or “Install MK” condition since the replacement of the toner container is not precisely detectable.	Item Code of maintenance replacing item (1 byte, 2 categories) First byte (Replacing item) 01: Toner container 02: Maintenance kit Second byte (Type of replacing item) 00: Fixed (Toner container or maintenance kit)
(13)	Unknown Toner Log NOTE: It is not logged if 100 or more counts are not added to the count at the last error.	# Remembers 1 to 5 of occurrence of unknown toner detection. If the occurrence of the previous unknown toner detection is less than 5, all of the unknown toner detection are logged.	Count. The total page count at the time of the “Toner Empty” error with using an unknown toner container.	Item Unknown toner log code (1 byte, 2 categories) First byte 01: Fixed (Toner container) Second byte 00: Fixed (Black)
(14)	Counter Log Comprised of three log counters including paper jams, self diagnostics errors, and replacement of the toner container. NOTE: It is not logged if 100 or more counts are not added to the count at the last error.	(g) Jam Indicates the log counter of paper jams depending on location. Refer to Paper Jam Log. All instances including those are not occurred are displayed.	(h) Self diagnostic error Indicates the log counter of self diagnostics errors depending on cause. (See page P.1-4-2) Example C6000: 4 Self diagnostics error 6000 has happened four times.	(i) Maintenance item replacing Indicates the log counter depending on the maintenance item for maintenance. T: Toner container 00: Black M: Maintenance kit 00: MK-310 MK-320 Example T00: 1 The (black) toner container has been replaced once.

TONER
www.tonerplus.com.ua

<table>
<tr><th>Service items</th><th>Description</th></tr>
<tr><td>>>Paper Feed</td><td>
Setting the paper feed operation (printer driver priority mode)
Description
With printer driver priority mode, when selecting the specific paper feed location (a cassette or MP tray) with the printer driver (it is not automatic selection), paper is fed from the selected location. Message "Add Paper" is displayed when there is no paper in that location. When selecting the MP tray as the paper feed location, paper is fed with the timing of maximum size (A4). As for the setting media type (setting the paper type), setting of the printer driver is notified to the engine PWB. Duplex printing operation is still the ordinary operation, and paper jam occurs if paper size is different from the setting of the printer.
Purpose
To set the printer driver priority mode which priority is given to the setup of a printer driver when the ordinary paper feed operation mode is not suitable for the usage condition of the user.
Method
1. Enter the service mode [>>Paper feed].
2. Press the OK key. Message [Paper feed?] will be displayed.
3. Select the mode (Special? or Normal?) pressing the ▼ key or ▲ key.
<table>
<tr><td>Special</td><td>Ordinary paper feed operation mode</td></tr>
<tr><td>Normal</td><td>Printer driver priority mode (Default)</td></tr>
</table>
4. Press the OK key.
Completion
</td></tr>
<tr><td>>>Maintenance</td><td>
Counter reset for the maintenance kit
Description
The "Install MK" message means that maintenance kit should be replaced at 300,000 pages of printing. The interval counter must be manually reset using this service item.
Maintenance kit MK-310 (for 30/31 ppm printer [EUR/USA model])
Maintenance kit MK-320 (for 35/37 and 45/47 ppm printer [EUR/USA model])
Maintenance kit includes the following units:
Drum unit
Developer unit
Fuser unit
Transfer roller
Separation charger brush unit
Paper feed system rollers

Purpose
To reset the life counter for the developer unit and drum unit included in maintenance kit.
Procedure for replacing the maintenance kit
Drum unit (See page P.1-5-10)
Developer unit (See page P.1-5-9)
Fuser unit (See page P.1-5-14)
Transfer roller (See page P.1-5-12)
Separation charger brush unit (See page P.1-5-12)
Paper feed system rollers:
Paper feed assembly [paper feed roller and pickup roller] (See page P.1-5-4)
Retard roller (See page P.1-5-5)
MP tray paper feed roller (See page P.1-5-8)

Procedure
1. Enter the service mode [>>Maintenance].
2. Press the OK key. [>>Maintenance?] will be displayed.
3. Press the OK key twice. The counter for each component is reset immediately.
Completion
Note:
Occurrences of resetting the maintenance kits are recorded on the service status page in number of pages at which the maintenance kit was replaced (See page P.1-3-2). This may be used to determine the possibility that the counter was errorneously or unintentionally reset.
</td></tr>
</table>

TONER
www.tonerplus.com.ua

<table>
<tr><th>Service items</th><th>Description</th></tr>
<tr><td>>>Developer</td><td>
Initializing the developer unit (toner install mode)
Description
The new developer unit is shipped from the factory with no toner contained. The developer can be automatically replete with toner when a toner container is installed onto it and the printer is turned on. However, because the toner reservoir in the developer has a large capacity, it requires a lengthy period of time until a substantial amount of toner has been fed to get the printer ready. (A new developer needs approximately 200 g for triggering the sensor inside.)
Purpose
To execute when the developer unit has been replaced.
Method
1. Enter the service mode [>>Developer].
2. Press the OK key. [>>Developer?] will be displayed.
3. Press the OK key. [Ready] will be displayed.
4. Turn off and on the printer. [Self test] [Please wait (Adding toner)] will displayed. The printer continually engages in this mode for a period of approximately 10 minutes, after which the printer reverts to the [Ready] state. [Ready] will displayed. Developer initialization is finished.
Completion
</td></tr>
<tr><td>>>DRUM-CTRL</td><td>
Automatic drum surface refreshing
Description
The drum surface refreshing operation is normally performed when the power is turned on to the printer or during warm-up when the printer is recovering from the Sleep mode, but even then only at those times that the temperature/humidity sensor detects the drum surface to be in a state of dew condensation. By using this mode, it is possible to force the drum surface refreshing operation to be performed automatically at a predetermined period of time, regardless of the status detected by the temperature/humidity sensor.
Purpose
To prevent bleeding of the output image when the printer's operating environment is one of high humidity.
Method
1. Enter the service mode [>>DRUM-CTRL].
2. Press the OK key. [>>DRUM-CTRL?] will be displayed.
3. Press the OK key.
4. Press the ▼ key or ▲ key and select the desire mode (from 00 to 02).
<table>
<tr><td>00</td><td>Mode turned OFF (default)</td></tr>
<tr><td>01</td><td>Refreshing operation time (short)</td></tr>
<tr><td>02</td><td>Refreshing operation time (long)</td></tr>
</table>
5. Press the OK key. The new value is set.
Completion
</td></tr>
</table>

TONER
www.tonerplus.com.ua

Service items	Description
>>Drum	**Drum surface refreshing** **Description** Rotates the drum approximately 3 minutes with toner lightly on the overall drum using the high-voltage output control of the engine PWB. The cleaning blade in the drum unit scrapes toner off the drum surface to clean it. **Purpose** To clean the drum surface when image failure occurs due to the drum. This mode is effective when dew condensation on the drum occurs. **Method** 1. Enter the service mode [>>Drum]. 2. Press the OK key. [>>Drum?] will be displayed. 3. Press the OK key. Drum surface refreshing will start and finish after approximately 3 minutes, after which the printer reverts to the [Ready] state. [Ready] will displayed. Drum surface refreshing is finished. **Completion**

TONER
www.tonerplus.com.ua

1-4-1 Paper misfeed detection

(1) Paper misfeed indication

When a paper misfeed occurs, the printer immediately stops printing and displays the paper misfeed message on the operation panel. To remove paper misfed in the printer, pull out the paper cassette, pull out the rear unit, remove the developer unit or open the duplex cover.

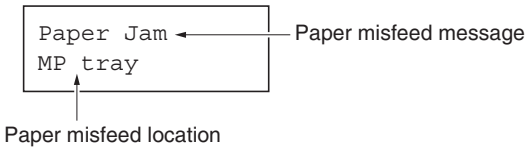

Figure 1-4-1

(2) Paper misfeed detection

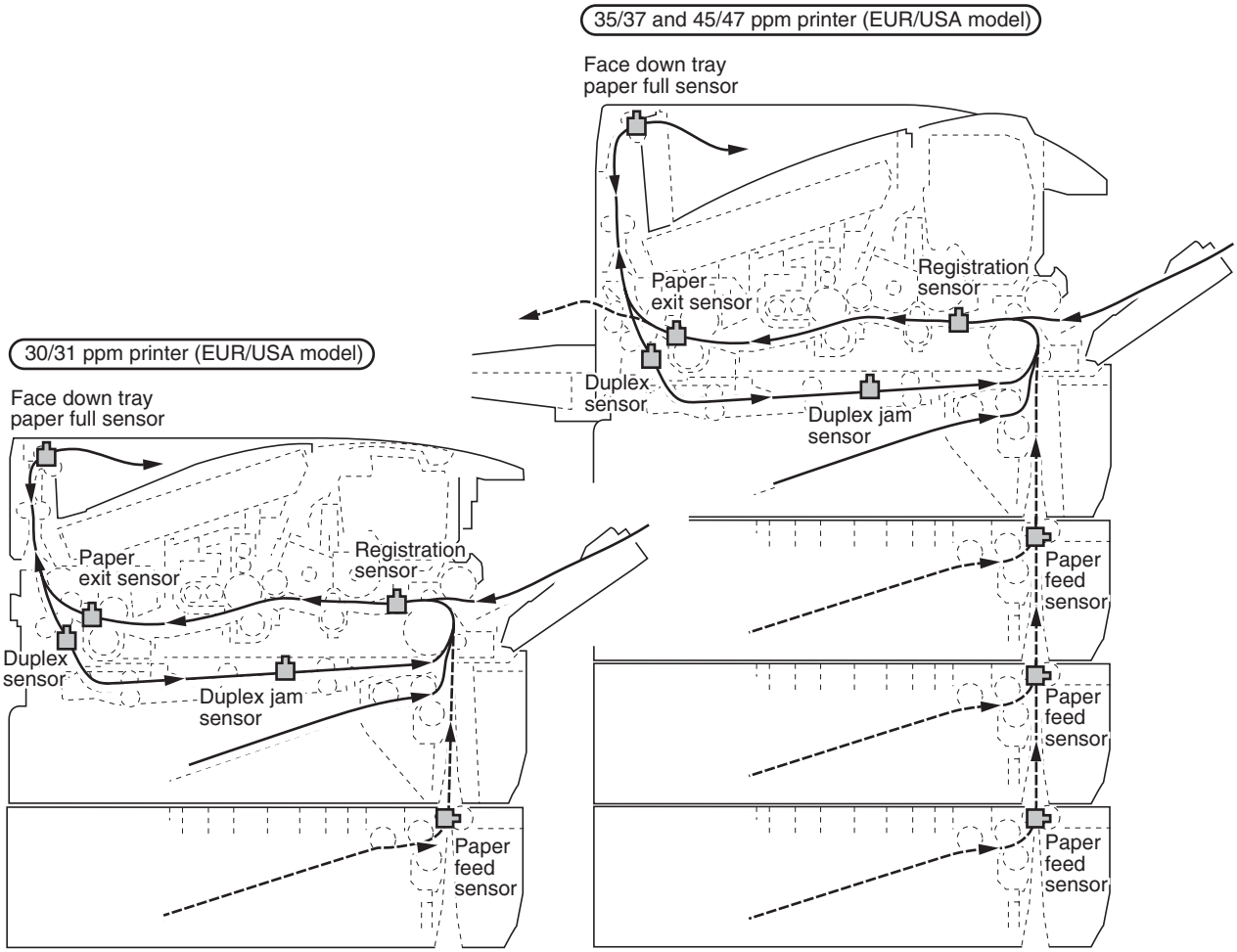

Figure 1-4-2

TONER
www.tonerplus.com.ua

1-4-2 Self-diagnostic function

(1) Self-diagnostic function

This printer is equipped with self-diagnostic function. When a problem is detected, the printer stops printing and display an error message on the operation panel. An error message consists of a message prompting a contact to service personnel, total print count, and a four-digit error code indicating the type of the error. (The display varies depending on the type of the error.)

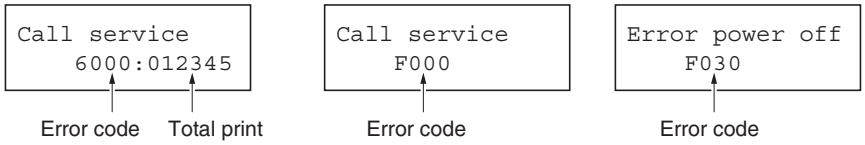

(2) Self diagnostic codes

Code	Contents	Remarks	
		Causes	Check procedures/corrective measures
0150	**Engine PWB EEPROM error** Detecting engine PWB EEPROM communication error.	Improper installation engine PWB EEPROM.	Check the engine PWB EEPROM installation, Remedy.
		Defective engine PWB	Replace the engine PWB (See page P.1-5-22).
0420	**Paper feeder communication error** Communication error between engine PWB and optional paper feeder.	Improper installation paper feeder.	Follow installation instruction carefully again.
		Defective harness between connect-L PWB (YC2) and paper feeder interface connector, or improper connector insertion.	Reinsert the connector. Also check for continuity within the connector harness. If none, remedy or replace the harness.
		Defective harness between connect-L PWB (YC6) and engine PWB (YC4), or improper connector insertion.	Reinsert the connector. Also check for continuity within the connector harness. If none, remedy or replace the harness.
		Defective engine PWB.	Replace the engine PWB (See page P.1-5-22).
		Defective paper feeder.	Replace the paper feeder.
1010	**Lift motor lock error** *35/37 and 45/47 ppm printers (EUR/USA model) only A motor over-current signal is detected continuously for 5 seconds since the lift motor is activated.	Defective bottom plate elevation mechanism in the paper cassette.	Check to see if the bottom plate can move smoothly and repair it if any problem is found.
		Defective lift motor drive transmission system.	Check if the gears rotate smoothly. If not, grease the bushings and gears. Check for broken gears and replace if any.
		Defective lift motor.	Replace the lift motor.
		Defective engine PWB.	Replace the engine PWB (See page P.1-5-22).

TONER
www.tonerplus.com.ua

Code	Contents	Remarks	
		Causes	Check procedures/corrective measures
1140	**Lift motor ascent error** *35/37 and 45/47 ppm printers (EUR/ USA model) only Optional bulk paper feeder's tray top position sensor does not turn on. Lift motor lock error occurred 3 times.	Defective bulk paper feeder's tray top position sensor.	Replace the bulk paper feeder's tray top position sensor.
		Defective harness between bulk paper feeder's tray top position sensor and main PWB (YC6), or improper connector insertion.	Reinsert the connector. Also check for continuity within the connector harness. If none, remedy or replace the harness.
		Defective bulk paper feeder's main PWB.	Replace the bulk paper feeder's main PWB. (Refer to bulk paper feeder's service manual)
1150	**Lift motor descent error** *35/37 and 45/47 ppm printers (EUR/ USA model) only Optional bulk paper feeder's tray bottom position sensor does not turn on. Lift motor lock error occurred 3 times.	Defective bulk paper feeder's tray bottom position sensor.	Replace the bulk paper feeder's tray bottom position sensor.
		Defective harness between bulk paper feeder's tray bottom position sensor and main PWB (YC8), or improper connector insertion.	Reinsert the connector. Also check for continuity within the connector harness. If none, remedy or replace the harness.
		Defective bulk paper feeder's main PWB.	Replace the bulk paper feeder's main PWB. (Refer to bulk paper feeder's service manual)
2000	**Main motor error** MMOTRDYN signal does not go low within 2 s after MMOTONN signal goes low.	Defective harness between main motor and engine PWB (YC10), or improper connector insertion.	Reinsert the connector. Also check for continuity within the connector harness. If none, remedy or replace the harness.
		Defective main motor drive transmission system.	Check if the rollers and gears rotate smoothly. If not, grease the bushings and gears. Check for broken gears and replace if any.
		Defective main motor.	Replace the main motor.
		Defective engine PWB.	Replace the engine PWB (See page P.1-5-22).

TONER
www.toner-plus.com.ua

Code	Contents	Remarks	
		Causes	Check procedures/corrective measures
2200	**Drum motor error** DMOTRDYN signal does not go low within 2 s after DMOTONN signal goes low.	Defective harness between drum motor and engine PWB (YC11), or improper connector insertion.	Reinsert the connector. Also check for continuity within the connector harness. If none, remedy or replace the harness.
		Defective drum motor drive transmission system.	Check if the gears rotate smoothly. If not, grease the bushings and gears. Check for broken gears and replace if any.
		Defective drum motor.	Replace the drum motor.
		Defective engine PWB.	Replace the engine PWB (See page P.1-5-22).
4000	**Polygon motor (laser scanner unit) error** POLRDYN signal does not go low within 2 s after POLONN signal goes low.	Defective harness between polygon motor and main PWB (YC10), or improper connector insertion.	Reinsert the connector. Also check for continuity within the connector harness. If none, remedy or replace the harness.
		Defective harness between main PWB (YC11) and engine PWB (YC12), or improper connector insertion.	Reinsert the connector. Also check for continuity within the connector harness. If none, remedy or replace the harness.
		Defective laser scanner unit.	Replace the laser scanner unit (See page P.1-5-32).
		Defective engine PWB.	Replace the engine PWB (See page P.1-5-22).
		Defective main PWB.	Replace the main PWB (See page P.1-5-26).
4200	**Laser output (pin photo sensor) error** The pin photo signal (PDN) is not output within a specified time after the polygon motor ready signal (POLRDYN) becomes ready (L level).	Defective harness between PD PWB (YC1) and main PWB (YC12), or improper connector insertion.	Reinsert the connector. Also check for continuity within the connector harness. If none, remedy or replace the harness.
		Defective APC PWB.	Replace the laser scanner unit (See page P.1-5-32).
		Defective PD PWB.	Replace the laser scanner unit (See page P.1-5-32).
		Defective main PWB.	Replace the main PWB (See page P.1-5-26).
5100	**Short-circuited main charger output** Five pages have been printed with the main charger output short-circuited.	Drum unit installed incorrectly.	Verify harness is not pinched in the drum unit.
		Engine PWB installed incorrectly.	Verify harness is not pinched in the engine PWB.
		Defective engine PWB.	Replace the engine PWB (See page P.1-5-22).

TONER
www.tonerplus.com.ua

Code	Contents	Remarks	
		Causes	Check procedures/corrective measures
6000	**Broken fuser heater lamp wire** The temperature does not reach 100°C/212°F after the fuser heater lamp has been turned on continuously for 30 s. 30/31 ppm printer (EUR/USA model): The temperature does not rise by 1°C/1.8°F after the fuser heater lamp has been turned on continuously for 5 s during printing. 35/37 and 45/47 ppm printers (EUR/USA model): Fuser thermistor M detection temperature does not rise by 1°C/1.8°F after the fuser heater lamp has been turned on continuously for 10 s during warm-up or at standby. Fuser thermistor S detection temperature does not rise by 1°C/1.8°F after the fuser heater lamp has been turned on continuously for 5 s during warm-up or at standby. The temperature does not rise by 1°C/1.8°F after the fuser heater lamp has been turned on continuously for 5 s during printing.	Poor contact in the fuser thermistor M connector terminals.	Reinsert the connector (See page P.1-5-19).
		Fuser thermistor M installed incorrectly.	Check and reinstall if necessary (See page P.1-5-19).
		Thermal cutout triggered.	Check for continuity. If none, replace the thermal cutout (See page P.1-5-19).
		Fuser heater lamp installed incorrectly.	Check and reinstall if necessary (See page P.1-5-19).
		Broken fuser heater lamp wire.	Check for continuity. If none, replace the fuser heater lamp (See page P.1-5-15).
6020	**Abnormally high fuser thermistor M temperature** 30/31 ppm printer (EUR/USA model): The temperature of the fuser thermistor M detects 250°C/482°F or more continuously for 3 s. 35/37 and 45/47 ppm printers (EUR/USA model): The temperature of the fuser thermistor M detects 240°C/464°F or more continuously for 3 s.	Shorted fuser thermistor M.	Measure the resistance. If it is 0 W, replace the fuser thermistor M (See page P.1-5-19).
		Defective engine PWB.	Replace the engine PWB (See page P.1-5-22).
6030	**Broken fuser thermistor M wire** 30/31 ppm printer (EUR/USA model): Input from fuser thermistor M is less than 1 (A/D value) for more than 1 s. 35/37 and 45/47 ppm printers (EUR/USA model): Input from fuser thermistor M is less than 1 (A/D value) for more than 3 s.	Poor contact in the fuser thermistor M connector terminals.	Reinsert the connector (See page P.1-5-19).
		Broken fuser thermistor M wire.	Measure the resistance. If it is ∞ Ω, replace the fuser thermistor M (See page P.1-5-19).
		Fuser thermistor M installed incorrectly.	Check and reinstall if necessary (See page P.1-5-19).
		Thermal cutout triggered.	Check for continuity. If none, replace the thermal cutout (See page P.1-5-19).
		Fuser heater lamp installed incorrectly.	Check and reinstall if necessary (See page P.1-5-15).
		Broken fuser heater lamp wire.	Check for continuity. If none, replace the fuser heater lamp (See page P.1-5-15).

TONER
www.tonerplus.com.ua

Code	Contents	Remarks	
		Causes	Check procedures/corrective measures
6120	**Abnormally high fuser thermistor S temperature** *35/37 and 45/47 ppm printers (EUR/USA model) only The temperature of the fuser thermistor S detects 250°C/482°F or more continuously for 3 s.	Shorted fuser thermistor S.	Measure the resistance. If it is 0 Ω, replace the fuser thermistor S (See page P.1-5-19).
		Defective engine PWB.	Replace the engine PWB (See page P.1-5-22).
6130	**Broken fuser thermistor S wire** *35/37 and 45/47 ppm printers (EUR/USA model) only Input from fuser thermistor S is less than 1 (A/D value) for more than 1 s.	Poor contact in the fuser thermistor S connector terminals.	Reinsert the connector (See page P.1-5-19).
		Broken fuser thermistor S wire.	Measure the resistance. If it is ∞ Ω, replace the fuser thermistor S (See page P.1-5-19).
		Fuser thermistor S installed incorrectly.	Check and reinstall if necessary (See page P.1-5-19).
6400	**Zero cross signal error** The ZCROSS signal does not reach the engine PWB for more than 2 s.	Defective harness between connect-L PWB (YC8) and engine PWB (YC3), or improper connector insertion.	Reinsert the connector. Also check for continuity within the connector harness. If none, remedy or replace the harness.
		Defective connection between power source unit (YC103) and connect-L PWB (YC1).	Reinsert the connector.
		Defective power source unit.	Replace the power source unit (See page P.1-5-28).
		Defective engine PWB.	Replace the engine PWB (See page P.1-5-22).
7000	**Toner motor lock error** A motor over-current signal is detected continuously for 5 seconds since the toner motor is activated.	Lump of toner inside toner container.	Replace the toner container.
		Defective toner replenishment drive system.	Replace the developer unit (See page P.1-5-9).
		Defective toner motor.	Replace the developer unit (See page P.1-5-9).
		Defective engine PWB.	Replace the engine PWB (See page P.1-5-22).
7410	**Drum unit non- installing error** The drum unit is not installed or not installed properly. The drum PWB EEPROM does not communicate normally.	The drum unit is not installed.	Install the drum unit (See page P.1-5-10).
		Defective connection drum PWB (YC1) and connect-L PWB (YC3).	Check the connection of connectors drum PWB (YC1) and connect-L PWB (YC3). (See page P.1-4-9, refer to figure 1-4-5)
		Defective drum PWB EEPROM.	Replace the drum unit (See page P.1-5-10).
		Defective engine PWB.	Replace the engine PWB (See page P.1-5-22).

TONER
www.toner plus.com.ua

Code	Contents	Remarks	
		Causes	Check procedures/corrective measures
F0 F000	**Communication problem between the main PWB and operation panel PWB** Communication is failed between the operation panel PWB and the main PWB.	Defective main PWB.	Turn the power switch off/on to restart the printer.If the error is not resolved, replace main PWB (See page P.1-5-26).
		Defective system DIMM PWB.	Replace the system DIMM PWB.
		Defective operation panel PWB.	Replace the operation panel PWB.
F010	**Main PWB (system DIMM PWB) checksum error** Checksum failed with system DIMM PWB on the main PWB.	Defective main PWB.	Turn the power switch off/on to restart the printer.If the error is not resolved, replace main PWB (See page P.1-5-26).
		Defective system DIMM PWB.	Replace the system DIMM PWB.
F020	**Main or expanded memory error** Checksum failed with main memory (RAM) on the main PWB or expanded memory (DIMM).	Defective system main memory (RAM) on the main PWB.	Turn the power switch off/on to restart the printer.If the error is not resolved, replace main PWB (See page P.1-5-26).
		Defective expanded memory (DIMM).	Replace the expanded memory (DIMM) (See page P.1-2-12).
F030	**General failure** Miscellaneous failure with the main PWB, other than F000, F010, F020, F040 and F226, above.	Defective main-PWB.	Turn the power switch off/on to restart the printer.If the error is not resolved, replace main PWB (See page P.1-5-26).
F040	**Main PWB - engine PWB communication error** Communication between main PWB and engine PWB is failed.	Defective harness between engine PWB (YC12) and main PWB (YC11), or improper connector insertion.	Reinsert the connector. Also check for continuity within the connector harness. If none, remedy or replace the harness.
		Defective main PWB.	Turn the power switch off/on to restart the printer.If the error is not resolved, replace main PWB (See page P.1-5-26).
		Defective engine PWB.	Replace the engine PWB (See page P.1-5-22).
F050	**Engine PWB ROM checksum error** A checksum error occurred with ROM on the engine PWB.	Some error may have occurred when downloading the firmware of the engine PWB.	Download the firmware of the engine PWB again using the memory card (See page P.1-6-3).
		Defective ROM on the engine PWB.	Turn the power switch off/on to restart the printer. If the error is not resolved, replace the EEPROM on the engine PWB or engine PWB (See page P.1-5-22).
F226	**Main PWB video data control error**	Defective main-PWB.	Turn the power switch off/on to restart the printer.If the error is not resolved, replace main PWB (See page P.1-5-26).

TONER
www.tonerplus.com.ua

1-4-3 Image formation problems

(1)Completely blank printout.

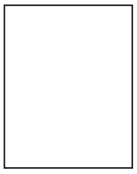

P.1-4-8/P.1-4-9

(2)All-black printout.

P.1-4-9

(3)Dropouts.

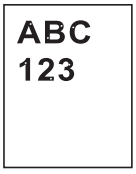

P.1-4-10

(4)Black dots.

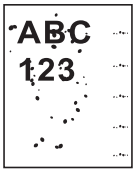

P.1-4-10

(5)Black horizontal streaks.

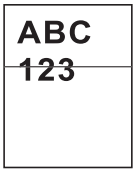

P.1-4-12

(6)Black vertical streaks.

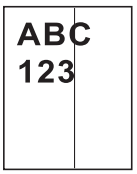

P.1-4-12

(7)Unsharpness.

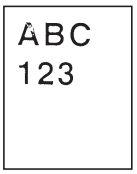

P.1-4-12

(8)Gray background.

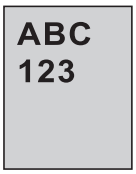

P.1-4-13

(9)Dirt on the top edge or back of the paper.

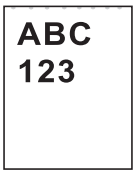

P.1-4-13

(10)Undulated printing at the left edge (scanning start position).

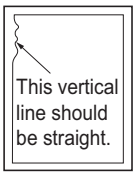

P.1-4-13

(1) Completely blank printout.

Print example	Causes		Check procedures/corrective measures
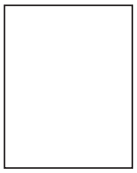 (Continued on next page.)	No transfer charging.	Poor contact of engine PWB's transfer bias output terminal and printer's contact (spring).	Check the installation position of the engine PWB. Refer to figure 1-4-3 below.
		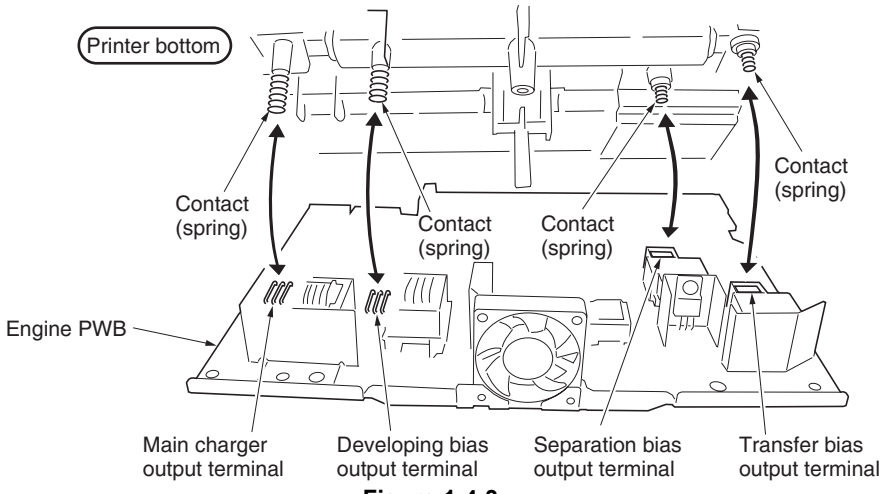 **Figure 1-4-3**	
		Defective engine PWB.	Replace the engine PWB (See page P.1-5-22).

TONER
www.tonerplus.com.ua

Print example	Causes		Check procedures/corrective measures
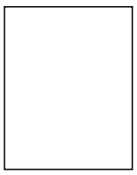	No developing bias output.	Poor contact of engine PWB's developing bias output terminal and printer's contact (spring).	Check the installation position of the engine PWB. Refer to figure1-4-3 above.
		Poor contact of engine PWB's developing bias output terminal and developer unit's contact.	Check the installation of the developer unit. Refer to figure 1-4-4 below.
		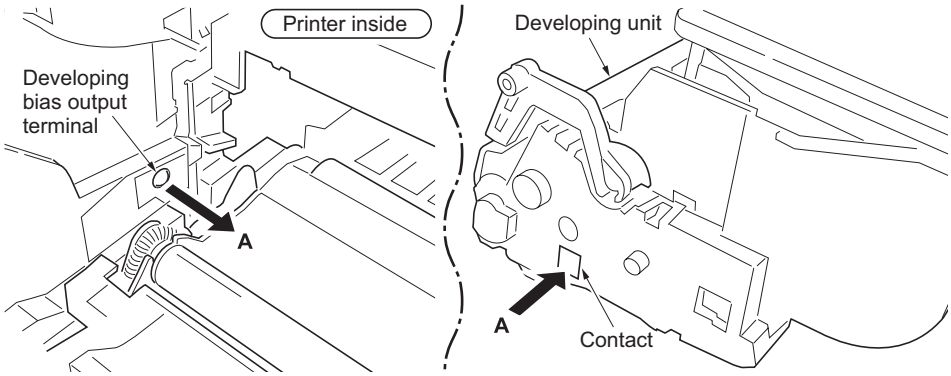 **Figure 1-4-4**	
		Defective engine PWB.	Replace the engine PWB (See page P.1-5-22).
	No laser beam output.	Defective laser scanner unit.	Replace the laser scanner unit (See page P.1-5-32).
		Defective main PWB.	Replace the main PWB (See page P.1-5-26).

(2) All-black printout.

Print example	Causes		Check procedures/corrective measures
	No main charging.	Defective main charger unit.	Replace the main charger unit (See page P.1-5-11).
		Poor contact of engine PWB's main charger output terminal and main charger unit's contact (spring).	Check the installation of the drum (main charger) unit. Refer to figure 1-4-5 below.
		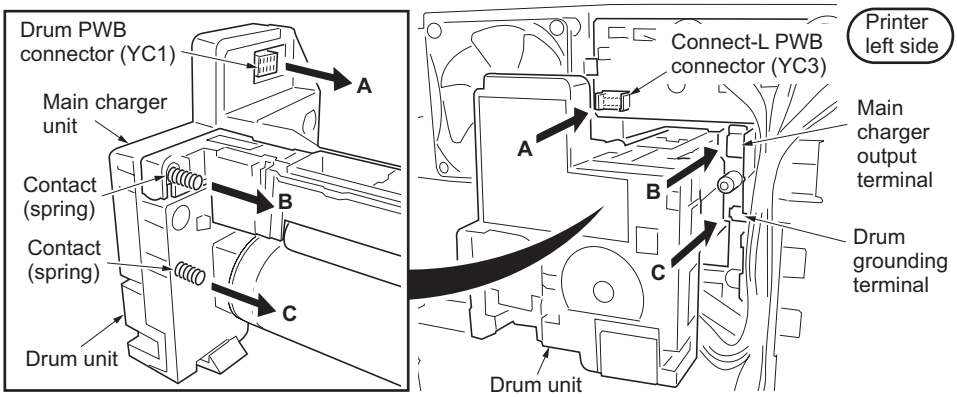 **Figure 1-4-5**	
		Poor contact of engine PWB's main charger output terminal and printer's contact (spring).	Check the installation position of the engine PWB. (See page P.1-5-22 and P.1-4-8, refer to figure 1-4-3)
		Defective engine PWB.	Replace the engine PWB (See page P.1-5-22).

TONER
www.tonerplus.com.ua

(3) Dropouts.

Print example	Causes	Check procedures/corrective measures
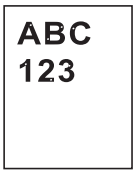	Defective developing roller (developer unit).	If the defects occur at regular intervals of 39 mm/1 9/16" (See page P.2-4-4), the problem may be the damaged developing roller (in the developer unit). Replace developer unit. If a developer unit which is known to work normally is available for check, replace the current developer unit in the printer with the normal one. If the symptom disappears, replace the developer unit with a new one (See page P.1-5-9).
	Defective drum (drum unit).	If the defects occur at regular intervals of 94 mm/3 11/16" (See page P.2-4-4), the problem may be the damaged drum (in the drum unit). Replace drum unit. If a drum unit which is known to work normally is available for check, replace the current drum unit in the printer with the normal one. If the symptom disappears, replace the drum unit with a new one (See page P.1-5-10).
	Fuser unit (heat roller or press roller).	If the defects occur at regular intervals of 72 mm/2 13/16", 82 mm/3 1/4" or 93 mm/3 11/16" (See page P.2-4-4), the problem may be the damaged heat roller or press roller (in the fuser unit). Replace fuser unit (heat roller or press roller). If a fuser unit which is known to work normally is available for check, replace the current fuser unit in the printer with the normal one. If the symptom disappears, replace the fuser unit (heat roller or press roller) with a new one (See page P.1-5-14).
	Defective paper specifications.	Paper with rugged surface or dump tends to cause dropouts. Replace paper with the one that satisfies the paper specifications.
	Defective transfer roller installation.	The transfer roller must be supported by the bushes at the both ends. Clean the bush to remove oil and debris. Replace the transfer roller if necessary (See page P.1-5-12).
	Defective engine PWB (transfer bias output circuit).	Replace the engine PWB (See page P.1-5-22).

(4) Black dots.

Print example	Causes	Check procedures/corrective measures
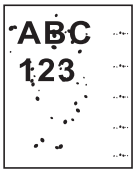	Defective drum unit.	If the defects occur at regular intervals of 94 mm/3 11/16" (See page P.2-4-4), the problem may be the damaged drum (in the drum unit). Replace drum unit. If the defects occur at random intervals, the toner may be leaking from the developer unit or drum unit. Replace developer unit or drum unit (See page P.1-5-9 or P.1-5-10).
	An additive which was applied to the cleaning roller in the drum unit during manufacturing was transferred to the main charger roller surface of main charger unit. (Immediately after the printer is installed.)	If the defects occur at a regular interval of 39 mm or 1 9/16" (Seepage P.2-4-4), the problem may be due to the damaged main charger roller (in the main charger unit). Perform the steps 1 to 3 below. 1. Perform the drum surface refreshing for three times (See page P.1-3-20). 2. Clean the drum surface (See next page). 3. Clean the main charger roller surface (See next page). If the problem persists, repeat them more times. If the problem still persists, replace the main charger unit (roller).

TONER
www.tonerplus.com.ua

Cleaning the drum surface

1. Remove the drum unit (See page P.1-5-10).
2. Remove the main charger unit (See page P.1-5-11).
3. Hold the drum unit at an angle shown right figure.
   Use care not to drop foreign objects into the drum.

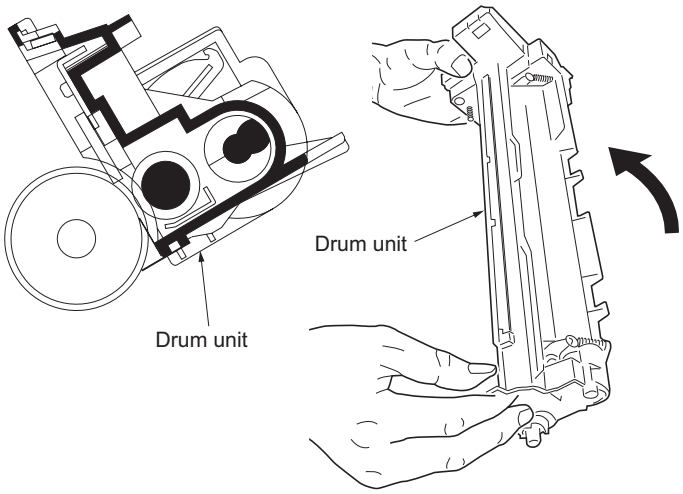

Figure 1-4-6

4. Rotate the drum by rotating the drum gear. (in the direction of arrow (A), approximately 90 degrees)
   CAUTION: Do not turn the drum in the opposite direction.
5. Lightly wipe the drum surface with a cleaning cloth in the direction of arrow (B).
   NOTE: Use a cleaning cloth with fine seams.
6. Repeat the steps 4 and 5 until the entire surface of the drum surface is cleaned.
   NOTE: Do not leave waste textiles of the cleaning cloth on the drum surface.

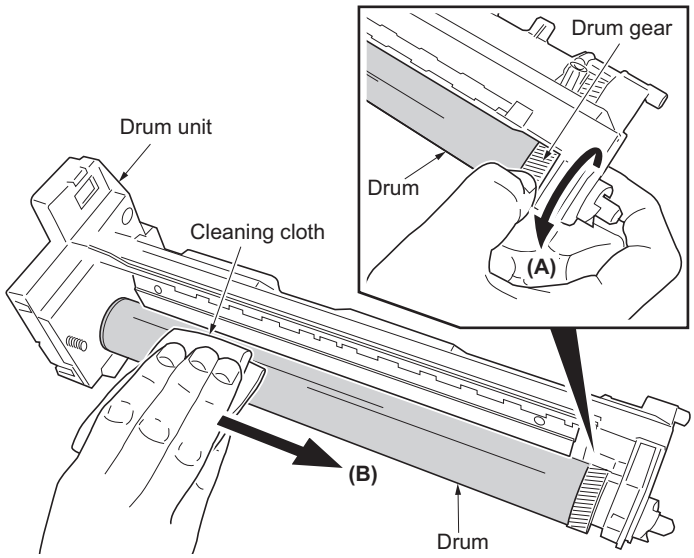

Figure 1-4-7

Cleaning the main charger roller surface

1. Lightly wipe the main charger roller surface in the direction of arrow (A).
   NOTE: Use the cleaning cloth with fine seams.
   CAUTION: Do not accidentally apply grease onto the main charger roller surface.
2. Slightly rotate the main charger roller to a new position.
3. Repeat the steps 1 and 2 to clean the entire surface of the main charger roller.
   NOTE: Do not leave waste textiles of the cleaning cloth on the main charger roller surface.
4. Lightly wipe the edges of the urethane sheet.
   CAUTION: Use care not to deform or damage the urethane sheet.

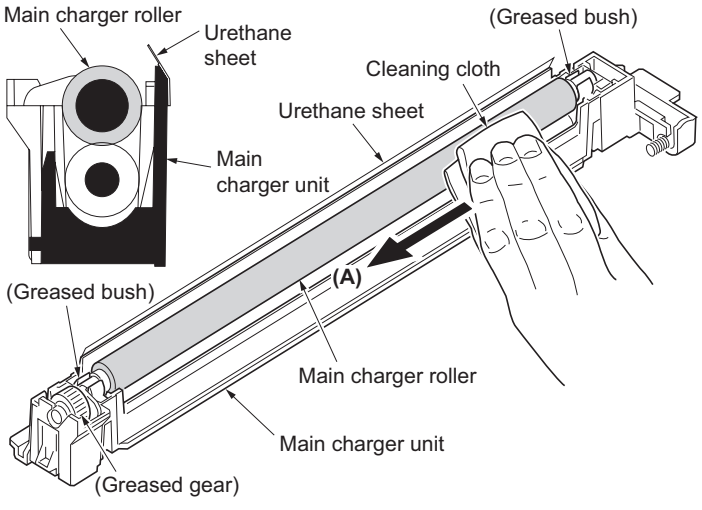

Figure 1-4-8

TONER
www.tonerplus.com.ua

(5) Black horizontal streaks.

Print example	Causes	Check procedures/corrective measures
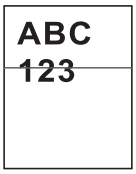	Defective drum unit's ground.	Defective drum unit's ground. The contact (spring) in the drum unit and its counter part, the drum grounding terminal in the printer, must be in a good contact. (See page P.1-4-9, refer to figure 1-4-5)
	Defective drum unit.	If a drum unit which is known to work normally is available for check, replace the current drum unit in the printer with the normal one. If the symptom disappears, replace the drum unit with a new one (See page P.1-5-10).

(6) Black vertical streaks.

Print example	Causes	Check procedures/corrective measures
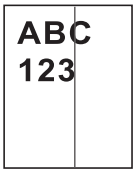	Flawed main charger roller.	Replace the main charger unit (See page P.1-5-11).
	Dirty or flawed drum.	Clean the drum or, if it is flawed, replace the drum unit (See page P.1-5-10).
	Defective drum unit.	A streak of toner remaining on drum after printing means that the cleaning blade (in the drum unit) is not working properly. Replace the drum unit (See page P.1-5-10). If a drum unit which is known to work normally is available for check, replace the current drum unit in the printer with the normal one. If the symptom disappears, replace the drum unit with a new one (See page P.1-5-22).
	Defective developing roller (developer unit).	If a developer unit which is known to work normally is available for check, replace the current developer unit in the printer with the normal one. If the symptom disappears, replace the developer unit with a new one (See page P.1-5-9).

(7) Unsharpness.

Print example	Causes	Check procedures/corrective measures
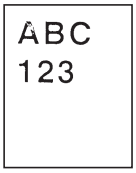	Defective paper specifications.	Paper with rugged surface or dump tends to cause unsharp printing. Replace paper with the one that satisfies the paper specifications.
	EcoPrint mode setting.	The EcoPrint mode can provides faint, unsharp printing because it acts to conserve toner for draft printing purpose. For normal printing, turn the EcoPrint mode off by using the operation panel. For details refer to the printer's operation guide.
	Defective transfer roller.	If the transfer roller is contaminated with toner, clean the transfer roller using a vacuum cleaner or by continuously printing a low density page until the symptom has faded away.
	Poor contact of engine PWB's transfer bias output terminal and printer's contact (spring).	Check the installation position of the engine PWB. (See page P.1-5-22 and P.1-4-8, refer to figure 1-4-3)

TONER
www.tonerplus.com.ua

(8) Gray background.

Print example	Causes	Check procedures/corrective measures
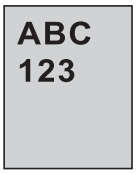	Print density setting.	The print density may be set too high. Try adjusting the print density. For details refer to the printer's operation guide.
	Defective drum surface potential.	If a drum unit which is known to work normally is available for check, replace the current drum unit in the printer with the normal one. If the symptom disappears, replace the drum unit with a new one (See page P.1-5-10).
	Defective main charger unit.	Replace the main charger unit (See page P.1-5-11).
	Defective developing roller (developer unit).	If a developer unit which is known to work normally is available for check, replace the current developer unit in the printer with the normal one. If the symptom disappears, replace the developer unit with a new one (See page P.1-5-9).

(9) Dirt on the top edge or back of the paper.

Print example	Causes	Check procedures/corrective measures
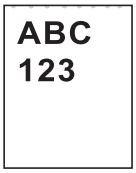	Toner contamination in various parts.	Dirty edges and back of the paper can be caused by toner accumulated on such parts as the paper chute, paper transportation paths, the bottom of the drum and developer, and the fuser unit inlet. Clean these areas and parts to remove toner.
	Defective transfer roller.	If the transfer roller is contaminated with toner, clean the transfer roller using a vacuum cleaner or by continuously printing a low density page until the symptom has faded away.

(10) Undulated printing at the left edge (scanning start position).

Print example	Causes	Check procedures/corrective measures
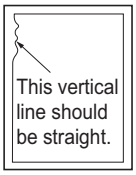	Defective polygon motor (laser scanner unit).	Replace the laser scanner unit (See page P.1-5-32).
	Defective engine PWB.	Replace the engine PWB (See page P.1-5-22).

TONER
www.tonerplus.com.ua

1-4-4 Electric problems

Problem	Causes	Check procedures/corrective measures
(1) Defective waste toner box detecting.	Defective waste toner sensor.	Replace the drum unit (See page P.1-5-10).
	Defective connection between drum PWB (YC1) and connect-L PWB (YC3).	Check the connection of connectors between drum PWB (YC1) and connect-L PWB (YC3). (See page P.1-4-9, refer to figure 1-4-5)
	Defective harness between connect-L PWB (YC6) and engine PWB (YC4), or improper connector insertion.	Reinsert the connector. Also check for continuity within the connector harness. If none, remedy or replace the harness.
	Defective engine PWB.	Replace the engine PWB (See page P.1-5-22).
(2) Defective paper jam detecting. Paper jam frequently occurs. False paper jam message display.	Defective registration sensor or duplex jam sensor.	Replace the engine PWB (See page P.1-5-22).
	Defective paper exit sensor, duplex sensor or face down tray paper full sensor.	Replace the paper exit sensor, duplex sensor or face down tray paper full sensor.
	Actuators of registration sensor, duplex jam sensor, duplex sensor or face down tray paper full sensor does not operate smoothly.	Repair or replace.
	A piece of paper torn from a sheet is caught around actuator of registration sensor, paper exit sensor, duplex sensor, duplex jam sensor or face down tray paper full sensor.	Check visually and remove it, if any.
	Defective engine PWB.	Replace the engine PWB (See page P.1-5-22).
(3)Defective paper gauge sensing. False paper gauge indication.	Defective paper gauge sensor 1 or 2.	Replace the engine PWB (See page P.1-5-22).
	Actuator of paper gauge sensor 1 and 2 does not operate smoothly.	Repair or replace.
	Defective engine PWB.	Replace the engine PWB (See page P.1-5-22).
(4)Defective paper size detecting. False paper size message display.	Defective cassette size switch.	Replace the cassette size switch.
	Defective engine PWB.	Replace the engine PWB (See page P.1-5-22).
(5) Defective message displaying (LCD) [1]. No message appears on the message display (LCD), though the message background is faintly illuminated. (Power is supplied to the operation panel PWB.)	Defective harness between operation panel PWB (YC1) and main PWB (YC13), or improper connector insertion.	Reinsert the connector. Also check for continuity within the connector harness. If none, remedy or replace the harness.
	Defective operation panel PWB.	Replace the operation panel PWB.
	Defective main PWB (system DIMM PWB).	Replace the main PWB [system DIMM PWB] (See page P.1-5-26).
	Defective operation panel PWB.	Replace the operation panel PWB.

TONER
www.tonerplus.com.ua

Problem	Causes	Check procedures/corrective measures
(6) Defective message displaying (LCD) [2]. No message appears on the message display (LCD), even thought the message background does not illuminate faintly. (The power is not supplied to the operation panel PWB.)	Broken power cord.	Replace the power cord.
	The power cord is not plugged in properly.	Check the contact between the printer's AC inlet and the AC power outlet.
	No electricity at the AC power outlet.	Measure the AC input voltage.
	Defective power source unit.	Replace the power source unit (See page P.1-5-28).
	Defective harness between operation panel PWB (YC1) and main PWB (YC13), or improper connector insertion.	Reinsert the connector. Also check for continuity within the connector harness. If none, remedy or replace the harness.
	Defective operation panel PWB.	Replace the operation panel PWB.
	Defective main PWB (system DIMM PWB).	Replace the main PWB [system DIMM PWB] (See page P.1-5-26).
(7) "Close rear unit" display is not cancelled to closing the rear unit.	Defective fuser unit's drawer connector.	If a fuser unit which is known to work normally is available for check, replace the current fuser unit in the printer with the normal one. If the symptom disappears, replace the fuser unit with a new one.
	Defective harness between engine PWB (YC6) and fuser drawer connector, or improper connector insertion.	Reinsert the connector. Also check for continuity within the connector harness. If none, remedy or replace the harness.
	Defective engine PWB.	Replace the engine PWB (See page P.1-5-22).
(8) "Close top cover" display is not cancelled to closing the top cover.	Deformed interlock switch 1's actuator lever.	Check the bending of the actuator lever of the interlock switch 1, if there is trouble, remedy or replace.
	Defective power source unit.	Replace the power source unit (See page P.1-5-28).
	Defective engine PWB.	Replace the engine PWB (See page P.1-5-22).
(9) "Close left side cover" display is not cancelled to closing the left side cover.	Deformed interlock switch 2's actuator lever.	Check the bending of the actuator lever of the interlock switch 2, if there is trouble, remedy or replace.
	Defective harness between interlock switch 2 and connect-L PWB (YC12), or improper connector insertion.	Reinsert the connector. Also check for continuity within the connector harness. If none, remedy or replace the harness.
	Defective interlock switch 2.	Replace the interlock switch 2.
	Defective engine PWB.	Replace the engine PWB (See page P.1-5-22).

TONER
www.tonerplus.com.ua

1-4-5 Mechanical problems

Problem	Causes/check procedures	Corrective measures
(1) No primary paper feed.	Check if the surfaces of the following rollers are dirty with paper powder: pickup roller, paper feed roller, and MP tray feed roller.	Clean with isopropyl alcohol.
	Check if the pickup roller, paper feed roller and MP tray feed roller are deformed.	Check visually and replace any deformed rollers.
	Defective installation position of paper feed drive unit (paper feed clutch, MP tray paper feed clutch and middle feed clutch) or MP tray paper feed solenoid.	Check the installation position of paper feed drive unit (paper feed clutch, MP tray paper feed clutch and middle feed clutch) or MP tray paper feed solenoid.
	Defective installation position of paper feed motor.	Check the installation position of paper feed motor.
(2) No secondary paper feed.	Check if the surfaces of the upper and lower registration rollers are dirty with paper powder.	Clean with isopropyl alcohol.
	Defective installation position of paper feed drive unit (paper feed clutch, MP tray paper feed clutch and middle feed clutch) or MP tray paper feed solenoid.	Check the installation position of paper feed drive unit (paper feed clutch, MP tray paper feed clutch and middle feed clutch) or MP tray paper feed solenoid.
	Defective installation position of paper feed motor.	Check the installation position of paper feed motor.
(3) Skewed paper feed.	Check if the paper is curled.	Change the paper.
(4) Multiple sheets of paper are fed at one time.	Check if the paper is excessively curled.	Change the paper.
	Deformed guides along the paper conveying path.	Check visually and replace any deformed guides.
(5) Paper jams.	Check if the contact between the upper and lower registration rollers is correct.	Check visually and remedy if necessary. Replace the pressure spring if it is deformed.
	Check if the press roller is extremely dirty or deformed.	Clean or replace the press roller (See page P.1-5-18).
	Check if the contact between the heat roller and its separation claws is correct.	Repair if any springs are off the separation claws.
(6) Toner drops on the paper conveying path.	Check if the developer unit or drum unit is extremely dirty.	Clean the developer unit or drum unit (See page P.1-5-10 or P.1-5-9).
(7) Abnormal noise is heard.	Check if the pulleys, rollers and gears operate smoothly.	Grease the bearings and gears.
	Check if the following drive unit are installed correctly: Paper feed drive unit Main drive unit	Correct.

TONER
www.tonerplus.com.ua

1-5-1 Precautions for assembly and disassembly

(1) Precautions

Be sure to turn the power switch off and disconnect the power plug before starting disassembly.
When handling PWBs, do not touch connectors with bare hands or damage the PWB.
Do not touch any PWB containing ICs with bare hands or any object prone to static charge.
Use only the specified parts to replace the fuser unit thermostat. Never substitute electric wires, as the printer may be seriously damaged.
When removing the hook of the connector, be sure to release the hook.

(2) Drum

Note the following when handling or storing the drum.
When removing the drum unit, never expose the drum surface to strong direct light.
Keep the drum at an ambient temperature between 0 °C/32 °F and 40 °C/104 °F and at a relative humidity not higher than 90% RH. Avoid abrupt changes in temperature and humidity.
Avoid exposure to any substance which is harmful to or may affect the quality of the drum.
Do not touch the drum surface with any object. Should it be touched by hands or stained with oil, clean it.

(3) Toner container

Store the toner container(s) in a cool, dark place.
Avoid direct light and high humidity.

TONER
www.tonerplus.com.ua

1-5-2 Outer covers

(1) Detaching and refitting the top cover

Procedure

1. Open the top cover.
2. Remove the two screws.
3. Remove the one connector and then remove the top cover.

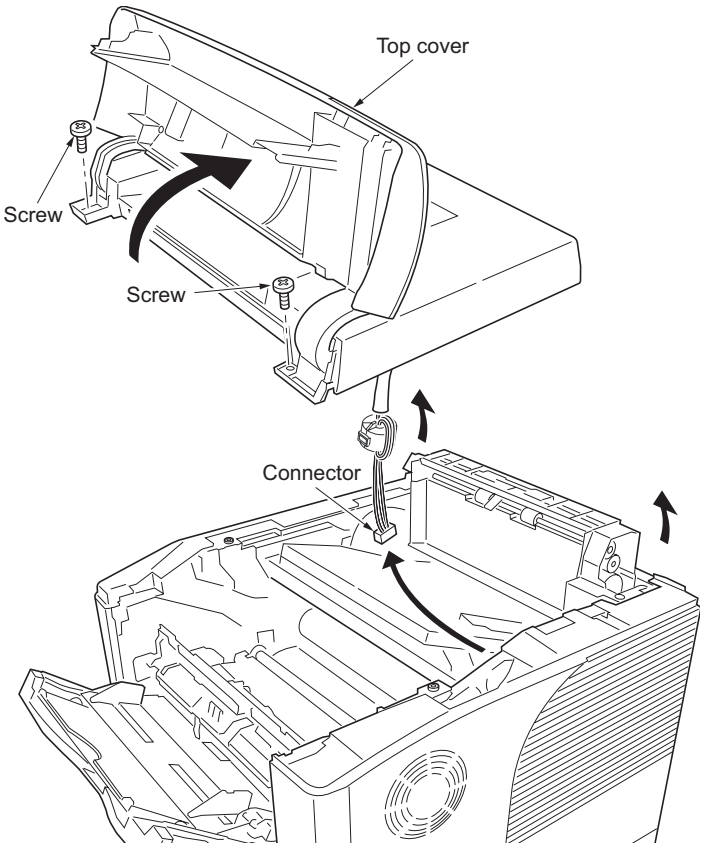

Figure 1-5-1

TONER+
www.tonerplus.com.ua

(2) Detaching and refitting the right cover and left cover

Procedure

1. Remove the paper cassette.
2. Open the MP tray.
3. Open the rear unit.
4. Remove the top cover (See page P.1-5-2).
5. Unlatch the three latches and then remove the right cover.

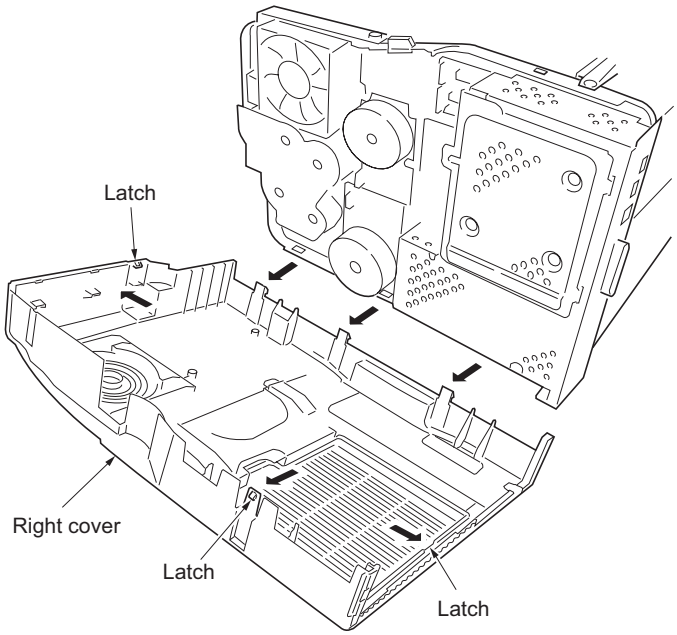

Figure 1-5-2

6. Remove the one screw.
7. Unlatch the six latches and then remove the left cover.

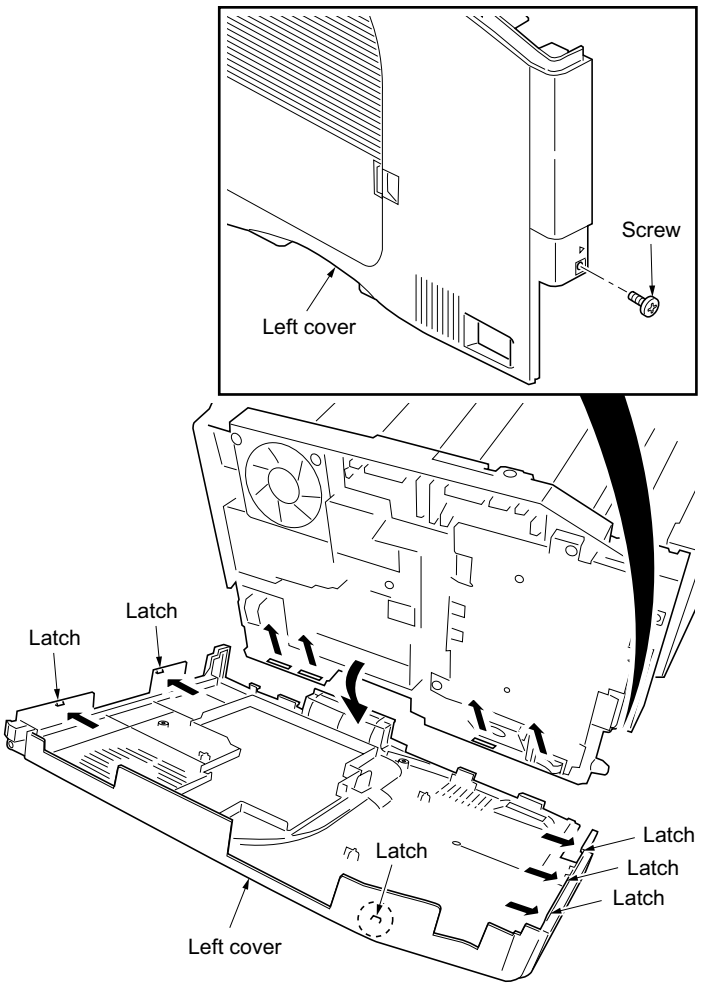

Figure 1-5-3

TONER
www.tonerplus.com.ua

1-5-3 Paper feed section

(1) Detaching and refitting the paper feed assembly (paper feed roller and pickup roller)

Procedure

1. Remove the paper cassette.
2. While pushing the lock and then slide the paper feed roller pin.
3. While pressing the lever and then remove the paper feed roller assembly.
4. Check or replace the paper feed assembly and refit all the removed parts.

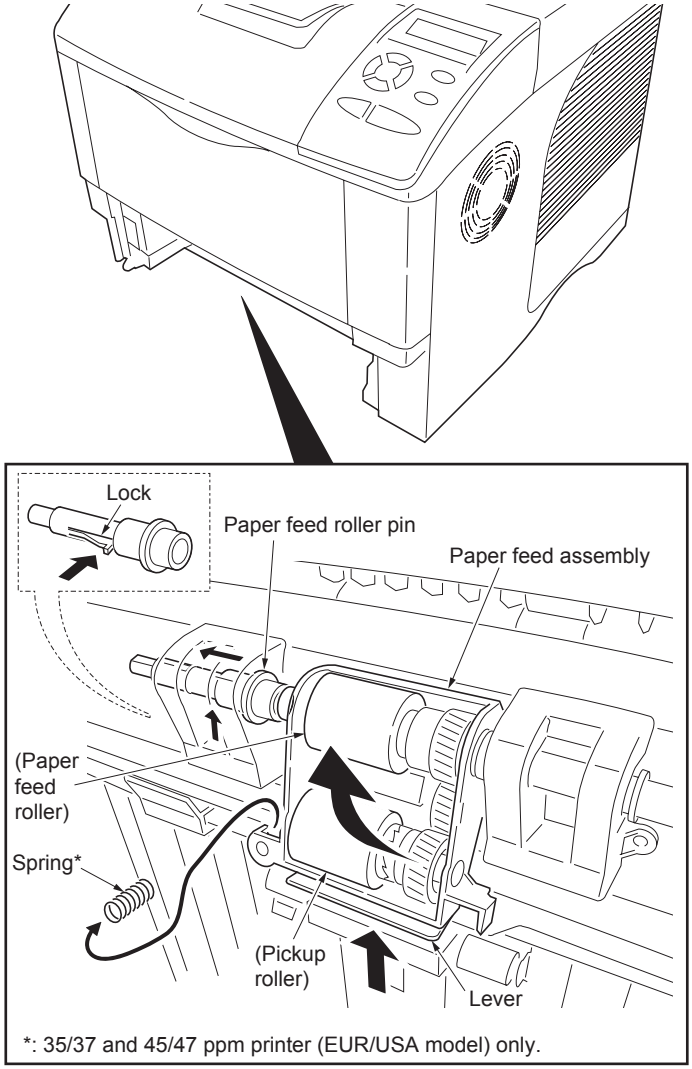

Figure 1-5-4

TONER
www.tonerplus.com.ua

(2) Detaching and refitting the retard roller

Procedure

1. Remove the paper cassette.
2. Push the bottom plate down until it locks (30/31 ppm printer [EUR/USA model] only).
3. Unlatch the two latches and then remove the retard guide.

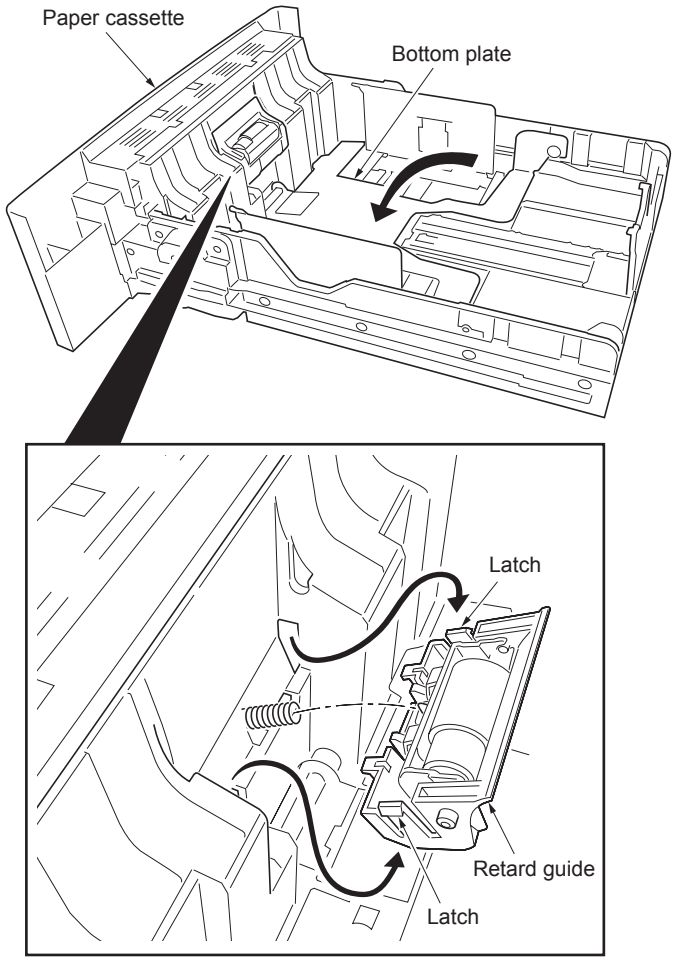

Figure 1-5-5

4. Remove the retard holder (roller) from the retard guide.
5. Check or replace the retard roller and refit all the removed parts.

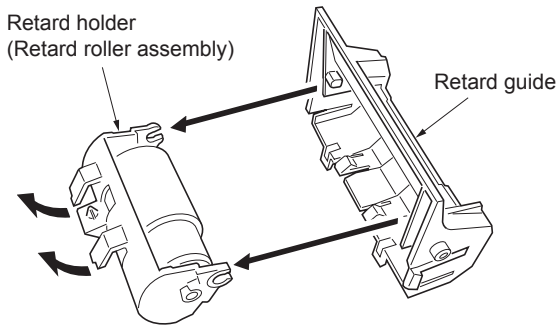

Figure 1-5-6

TONER
www.tonerplus.com.ua

(3) Detaching and refitting the registration upper and lower roller

Procedure

1. Remove the developer unit (See page P.1-5-9).
2. Remove the spring.
3. Pull the registration upper roller.

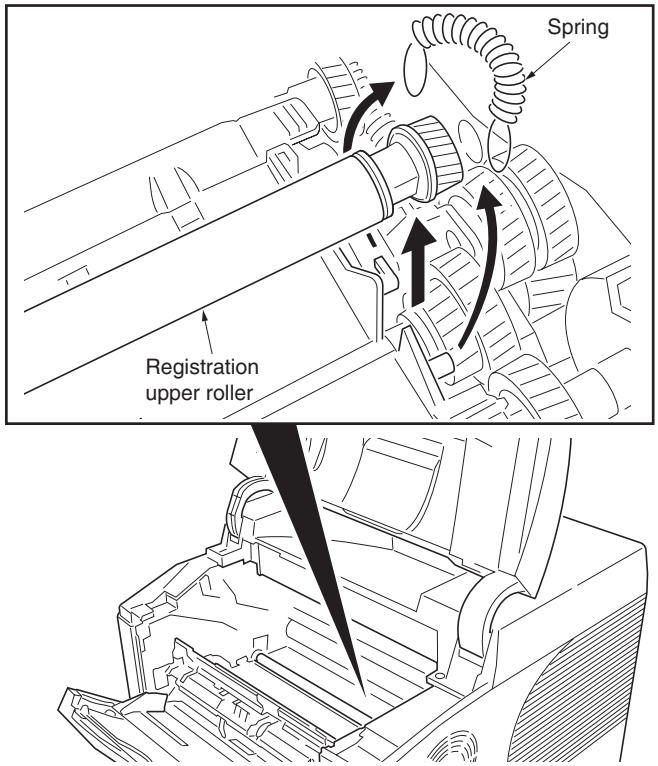

Figure 1-5-7

4. Remove the registration upper roller from the bush.
5. Remove the gear and bush from the registration upper roller.

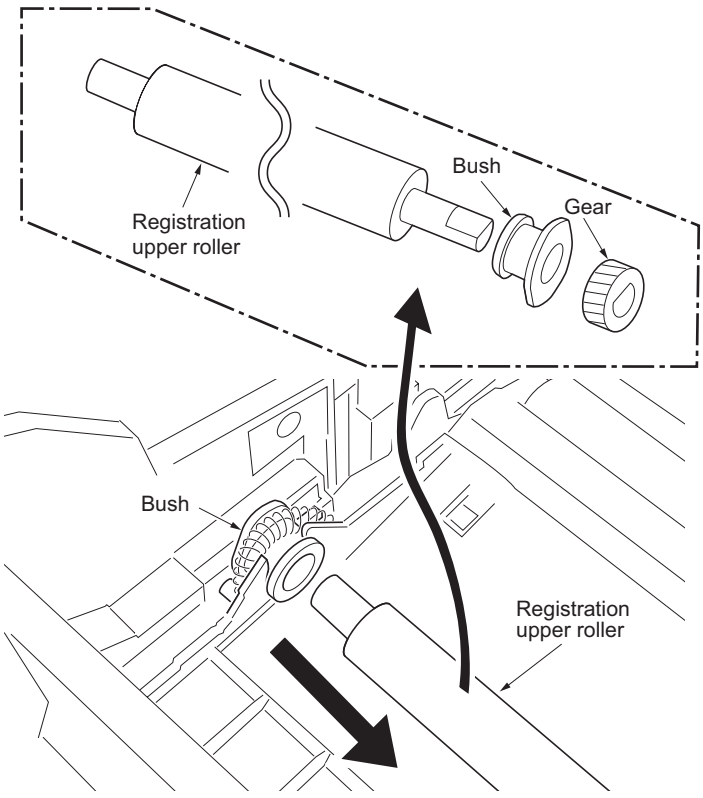

Figure 1-5-8

TONER
www.tonerplus.com.ua

6. Remove the registration lower roller.
7. Remove the stopper, gear and three bushes from the registration lower roller.
8. Check or replace the registration upper and lower roller and refit all the removed parts.

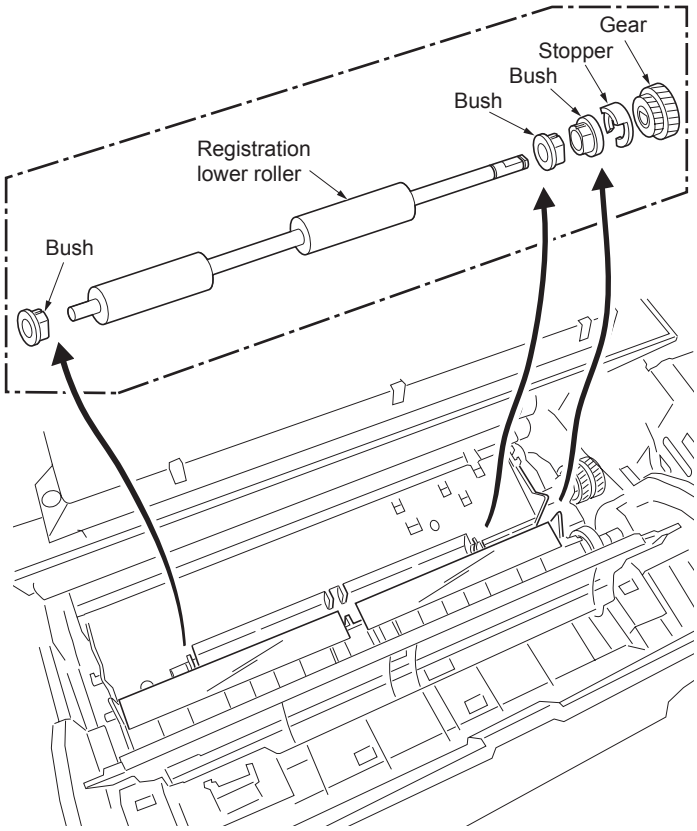

Figure 1-5-9

TONER
www.tonerplus.com.ua

(4) Detaching and refitting the MP tray paper feed roller

Procedure

1. Open the MP tray.
2. Grasp and pull the MP tray upwards until it is removed from the printer.

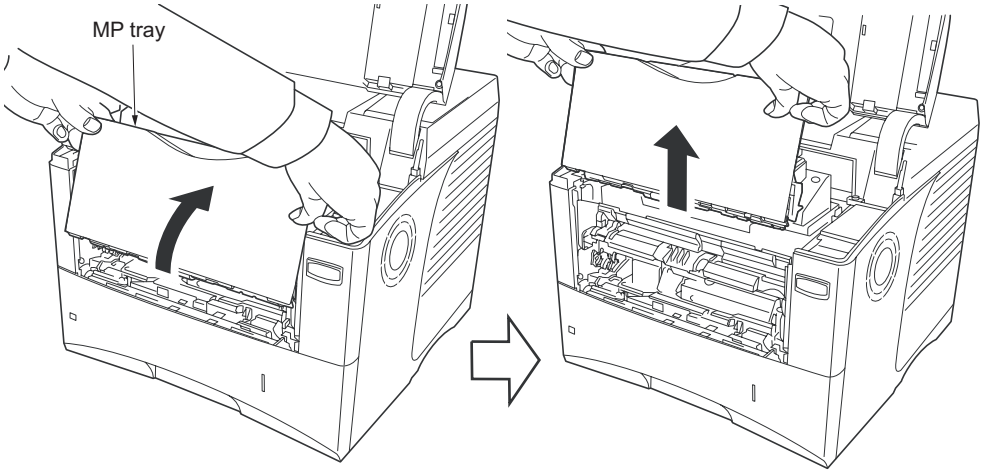

Figure 1-5-10

3. Pull the MP tray paper feed roller holder.
4. Slide the MP tray paper feed roller holder.
5. Remove the MP tray paper feed roller.
6. Check or replace the MP tray paper feed roller and refit all the removed parts.

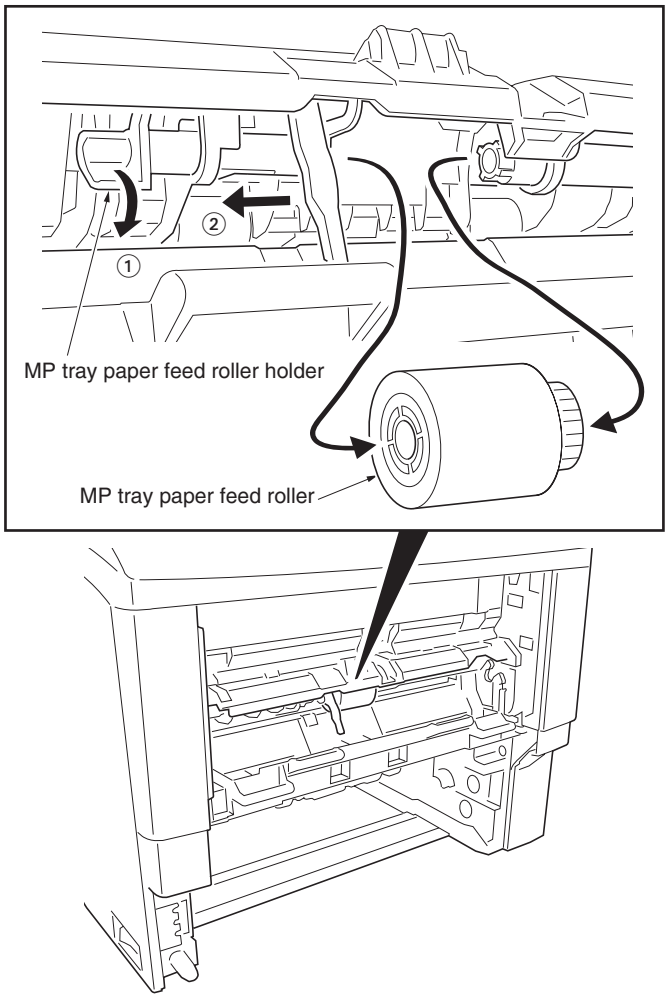

Figure 1-5-11

TONER+
www.tonerplus.com.ua

1-5-4 Developer section

(1) Detaching and refitting the developer unit

Procedure

1. Open the top cover.
2. Open the MP tray.
3. Remove the developer unit.
4. Check or replace the developer unit and refit all the removed parts.

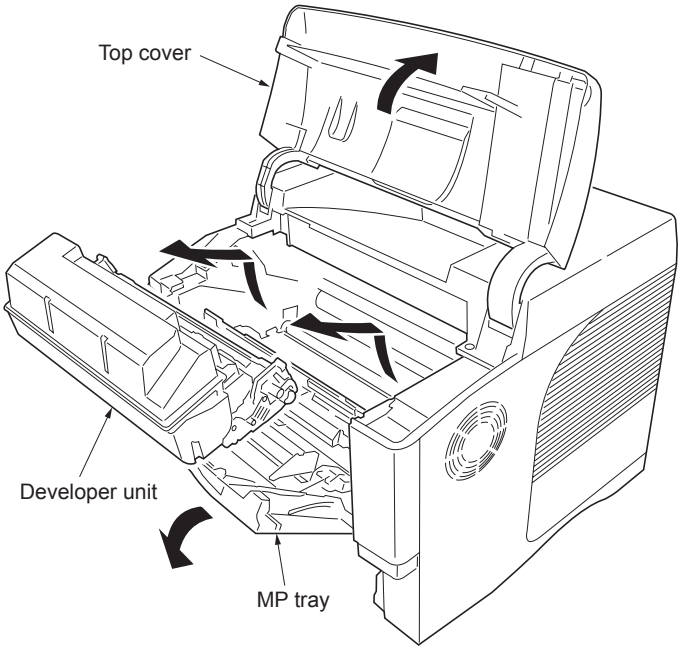

Figure 1-5-12

TONER
www.tonerplus.com.ua

1-5-5 Drum section

(1) Detaching and refitting the drum unit

Procedure

1. Remove the developer unit (See page P.1-5-9).
2. Open the left side cover and then remove the waste toner box.
3. Unlock the drum unit lock and then remove the drum unit.
4. Check or replace the drum unit and refit all the removed parts.

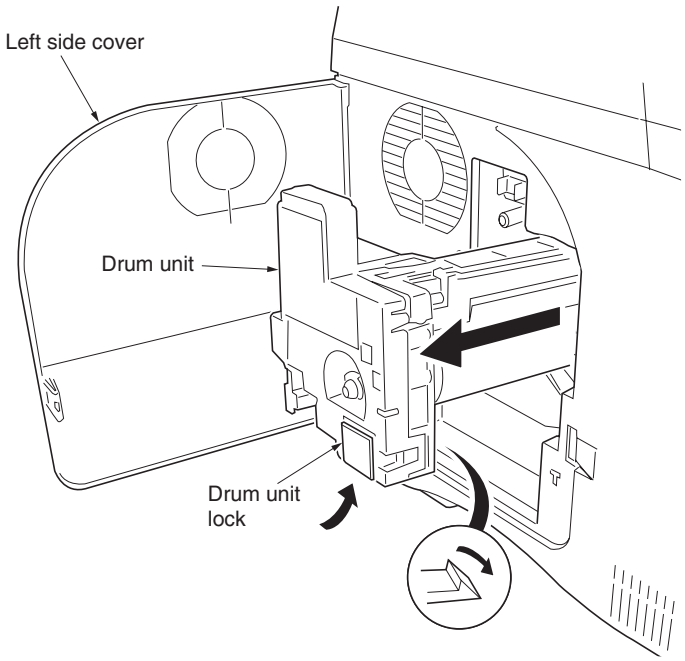

Figure 1-5-13

TONER
www.tonerplus.com.ua

(2) Detaching and refitting the main charger unit

Procedure

1. Remove the drum unit (See page P.1-5-10).
2. Unlock the lock lever and then remove the main charger unit.
3. Check or replace the main charger unit and refit all the removed parts.

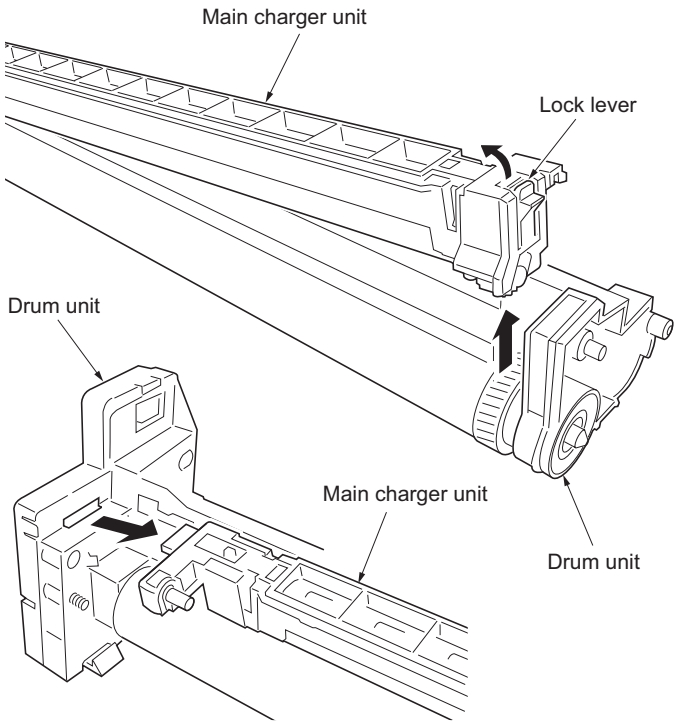

Figure 1-5-14

TONER
www.tonerplus.com.ua

1-5-6 Transfer/separation section

(1) Detaching and refitting the transfer roller and separation charger brush unit

Procedure

1. Remove the developer unit (See page P.1-5-9).
2. Remove the drum unit (See page P.1-5-10).
3. Slide the paper chute guide and unhook the hooks.
4. Remove the paper chute guide.

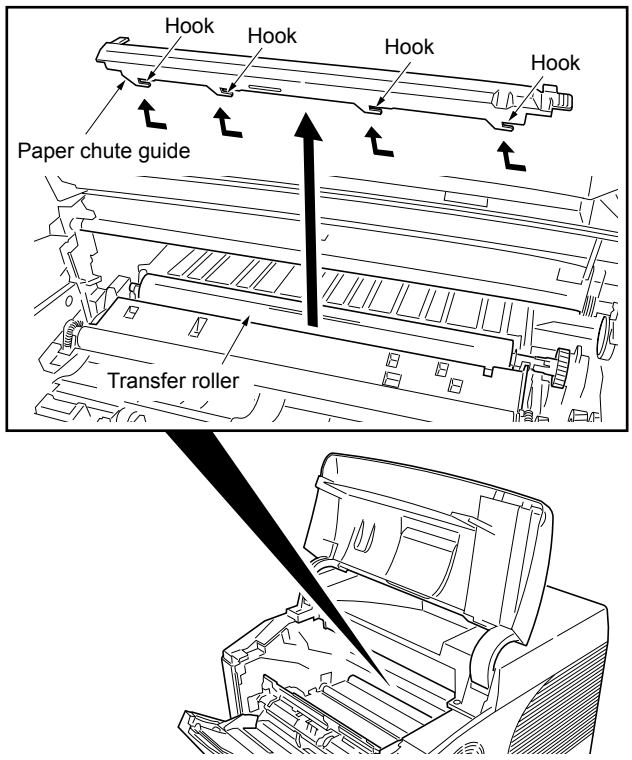

Figure 1-5-15

5. Remove the shaft (transfer roller) from the both bushes.

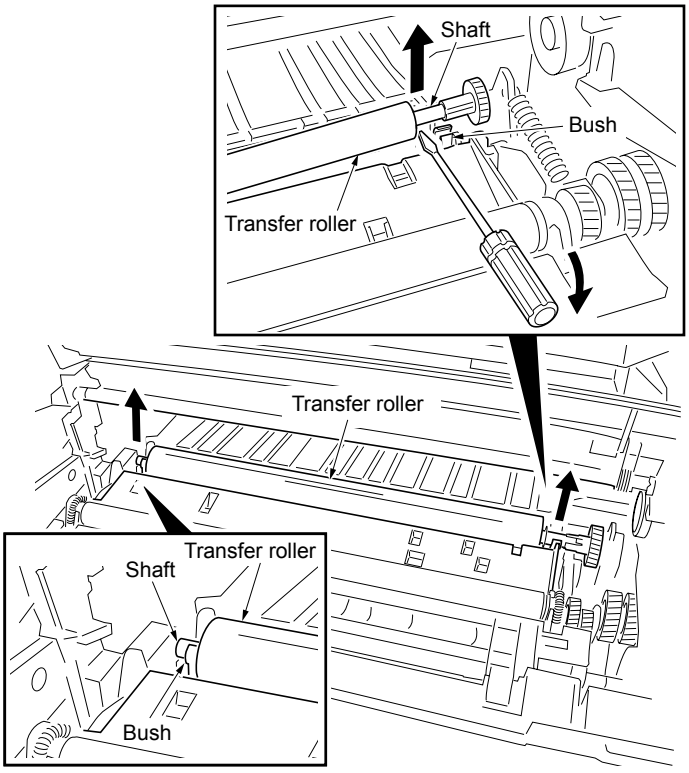

Figure 1-5-16

TONER
www.tonerplus.com.ua

6. Release the four latches and then remove the separation charger brush unit.
7. Check or replace the transfer roller and separation charger brush unit and refit all the removed parts.
   CAUTION: Note the following, when refitting the separation charger brush unit.
   A. The separation charger brush unit is inserted into the two projections of the frame and does not run on to the projections.
   B. The separation charger brush unit is firmly in contact with the separation charger plate of the frame.

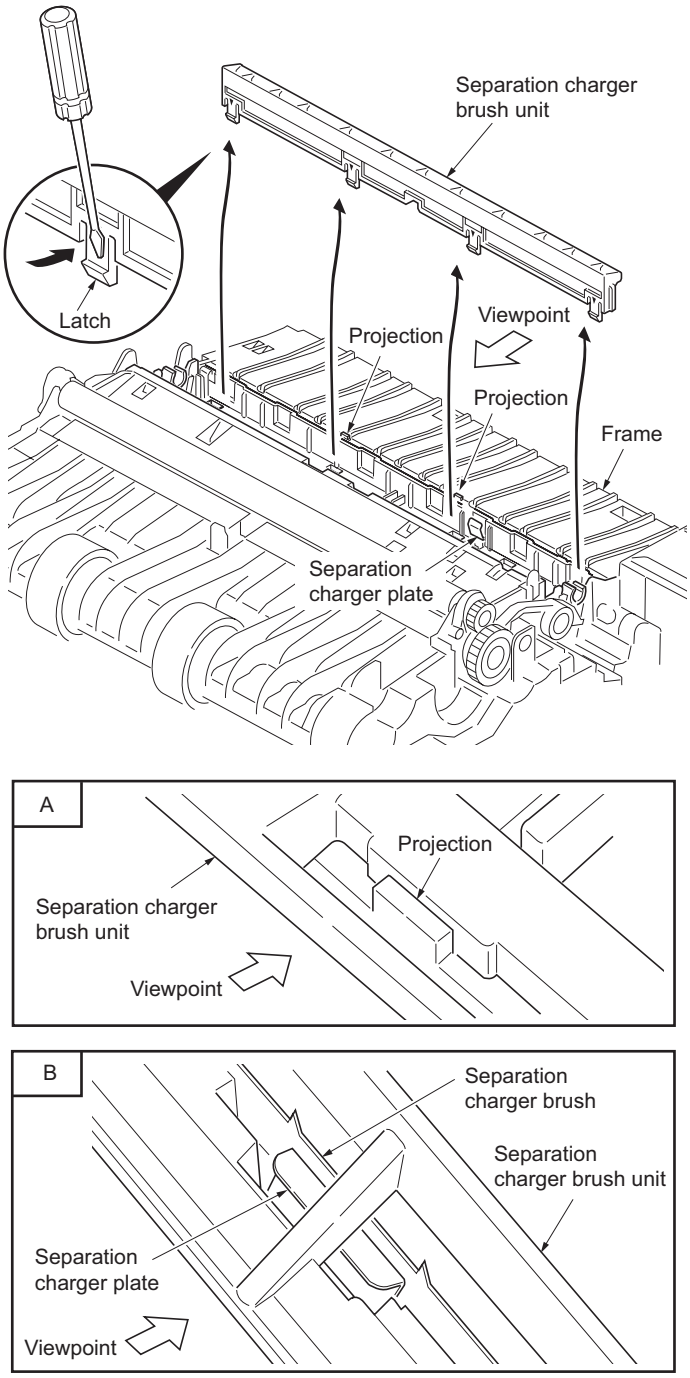

Figure 1-5-17

TONER
www.tonerplus.com.ua

1-5-7 Fuser section

(1) Detaching and refitting the fuser unit

Procedure

1. Open the rear unit.
2. Insert a flat-blade screwdriver to push the fuser lock (gray colored) on the rear unit and the fuser unit is separated from the rear unit (rails).
   Do it both ends of the rear unit.
3. Check or replace the fuser unit and refit all the removed parts.
   Place the fuser unit on the rear unit (rails) and push the fuser lock so that the fuser lock catches the fuser unit.
   Do it for the both ends of the fuser unit.

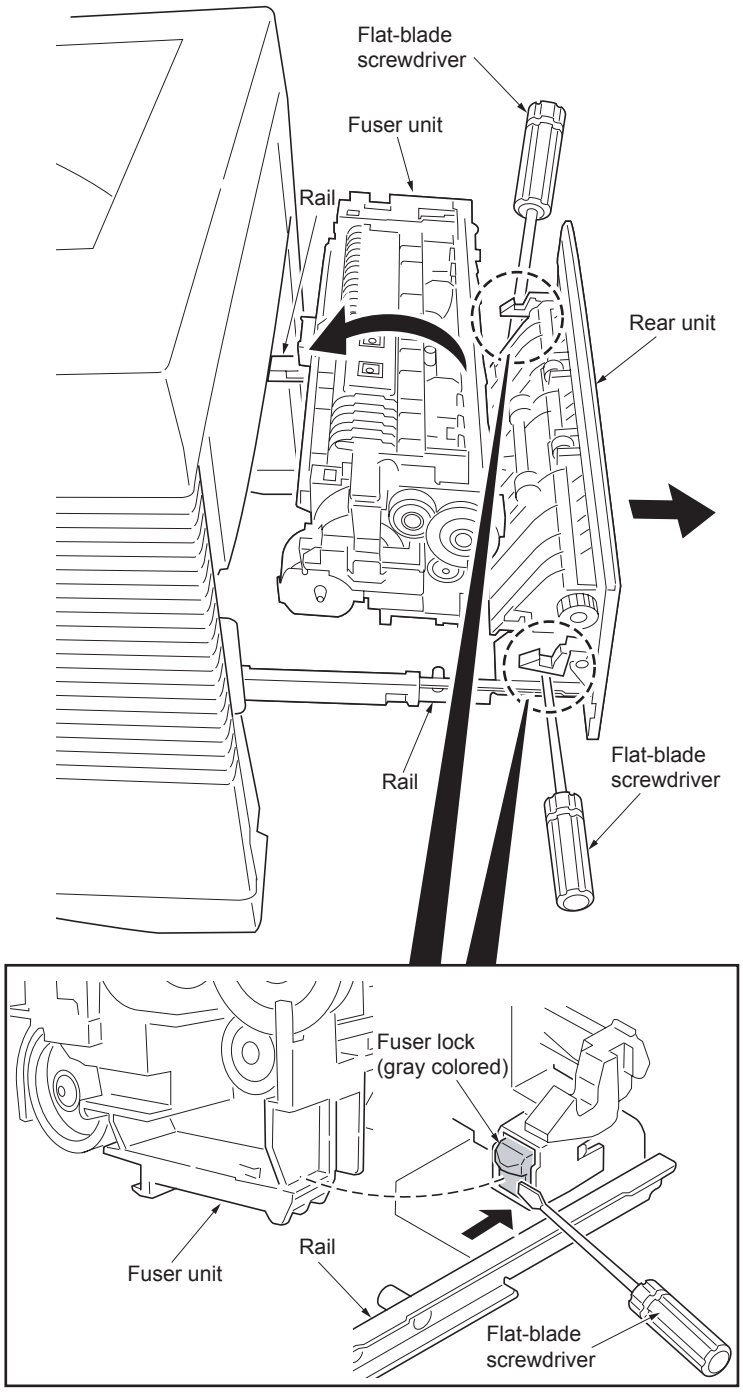

Figure 1-5-18

TONER
www.tonerplus.com.ua

(2) Detaching and refitting the fuser heater lamp

Procedure

1. Remove the fuser unit (See page P.1-5-14).
2. Remove the two screws and then open the fuser unit.

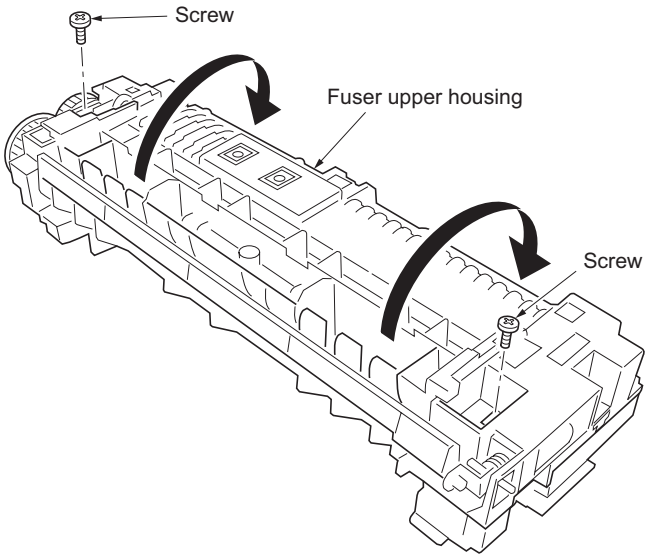

Figure 1-5-19

3. Remove the screw form the fuser heater lamp.

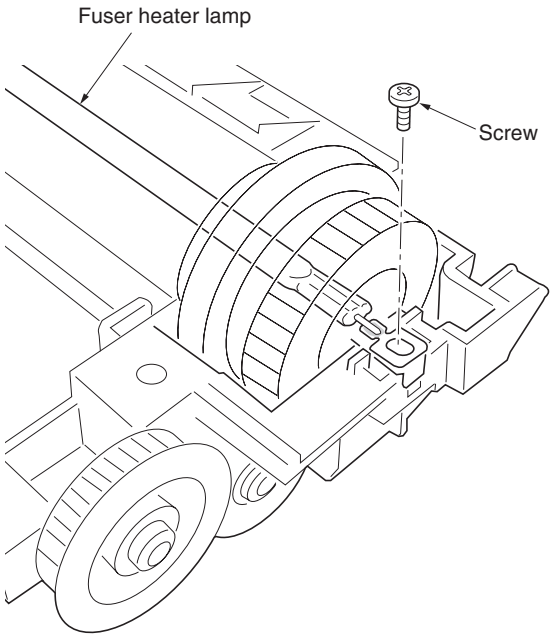

Figure 1-5-20

TONER
www.tonerplus.com.ua

4. Remove the screw form the fuser heater lamp.
5. Remove the fuser heater lamp.
6. Check or replace the fuser heater lamp and refit all the removed parts.
   Seat the fuser heater lamp aligning its wattage mark and welding mark faced with the correct direction and side.

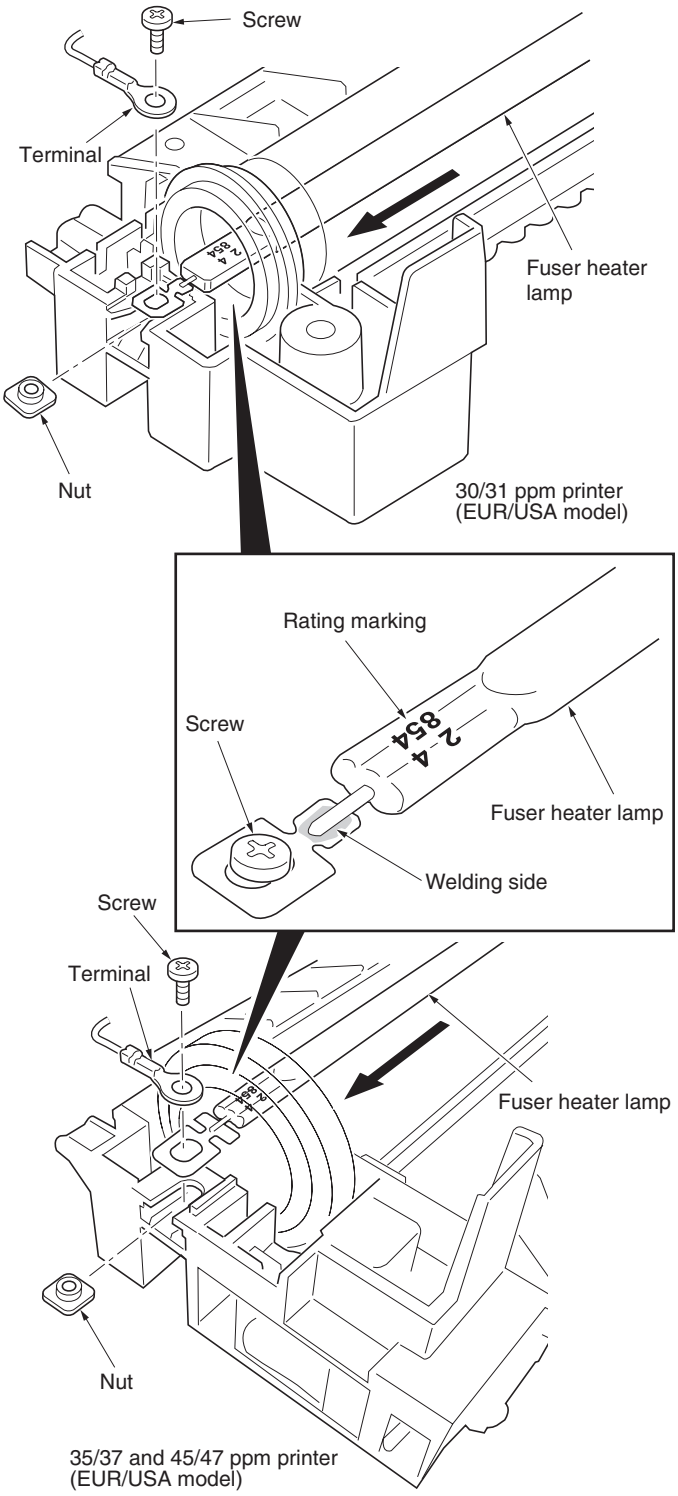

Figure 1-5-21

TONER
www.tonerplus.com.ua

(3) Detaching and refitting the heat roller

Procedure

1. Remove the fuser heater lamp (See page P.1-5-15).
2. Remove the heat roller (assembly) from the fuser upper frame.
3. Remove the heat gear Z36, heat R bush and heat L bush from the heat roller. (30/31 ppm printer [EUR/USA model])
   Remove the heat gear Z46, two bearings and two stoppers from the heat roller. (35/37 and 45/47 ppm printer [EUR/USA model])
4. Check or replace the heat roller and refit all the removed parts.

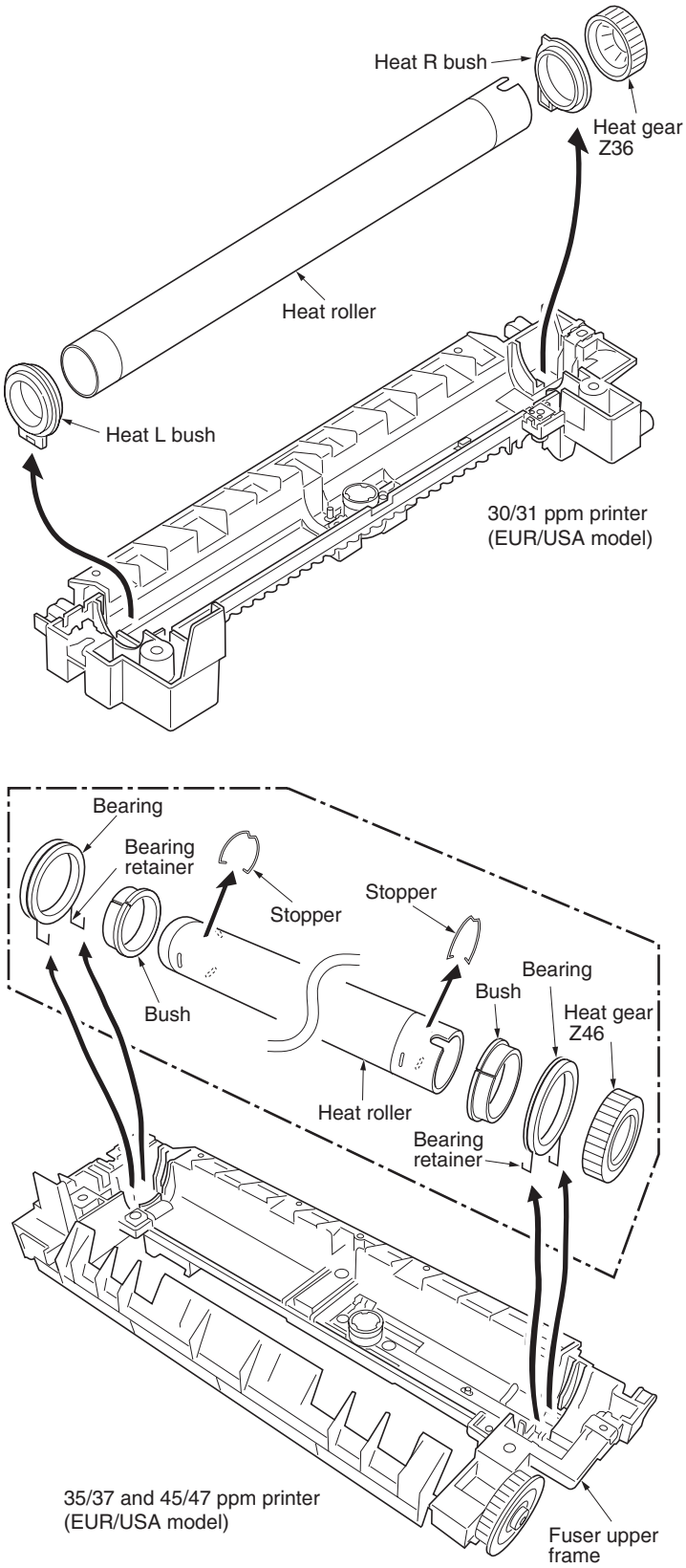

Figure 1-5-22

TONER
www.tonerplus.com.ua

(4) Detaching and refitting the press roller

Procedure

1. Remove the fuser unit (See page P.1-5-14).
2. Open the fuser unit (See page P.1-5-15).
3. Remove the press roller from the fuser lower frame.
4. Check or replace the press roller and refit all the removed parts.

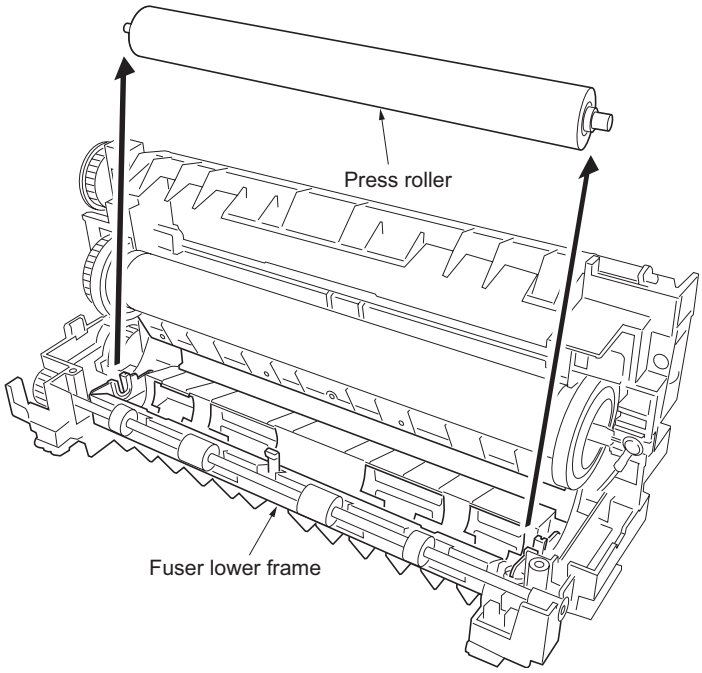

Figure 1-5-23

TONER
www.tonerplus.com.ua

(5) Detaching and refitting the fuser thermistor M, fuser thermistor S, and thermal cutout

Procedure

1. Remove the fuser unit (See page P.1-5-14).
2. Turn the fuser unit bottom side up.
3. Unlatch the six latches and then remove the cord cover.
4. Unlatch the four latches and then remove the fuser drawer connector.
5. Remove the one/two connector(s).

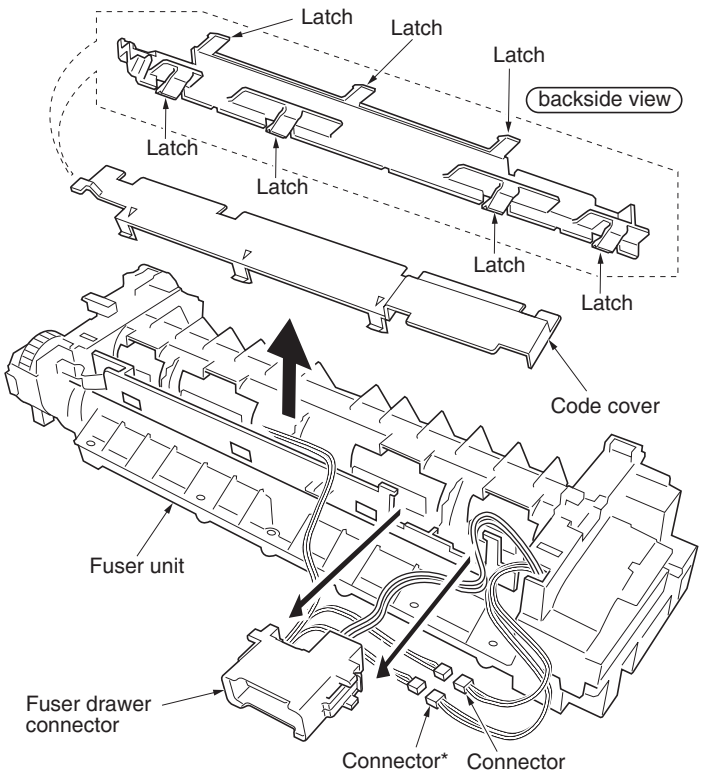

*: 35/37 and 45/47 ppm printer [EUR/USA model] only.

Figure 1-5-24

TONER
www.tonerplus.com.ua

6. Remove the heat roller (See page P.1-5-17).
7. Remove the one screw and then remove the fuser thermistor M/S.

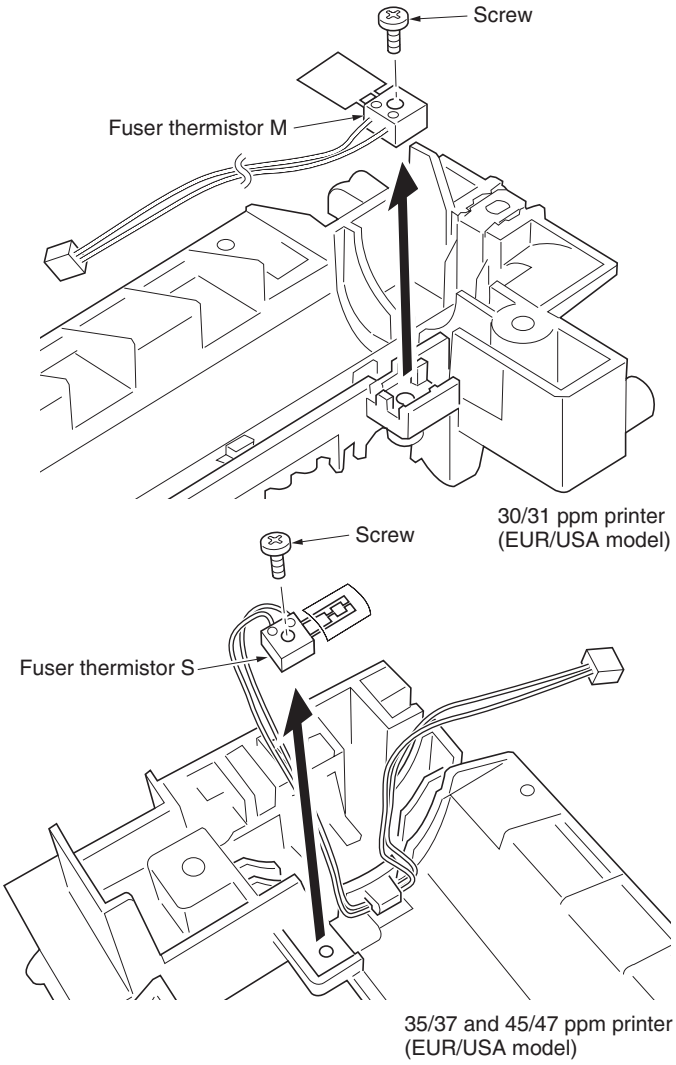

Figure 1-5-25

8. Remove the one screw (nut) and then remove the fuser thermistor M (35/37 and 45/47 ppm printer [EUR/USA model] only).

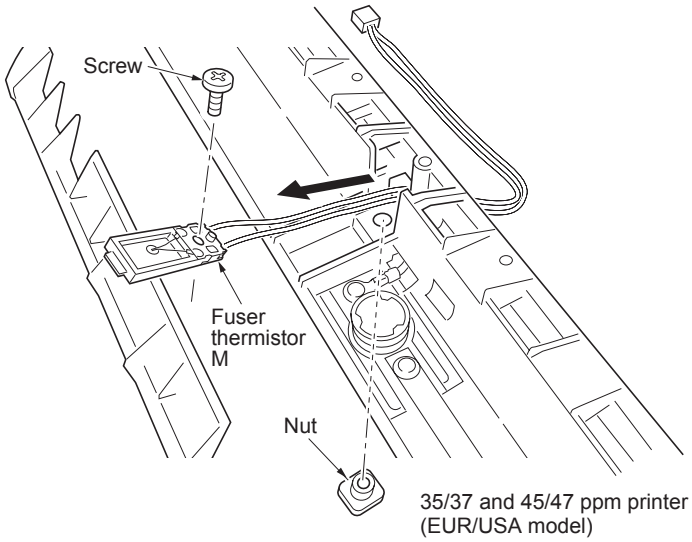

Figure 1-5-26

TONER
www.tonerplus.com.ua

9. Remove the two screws (nuts) and then remove the terminal and cord plate.
10. Remove the thermal cutout
11. Check or replace the fuser thermistor M and S, thermal cutout and refit all the removed parts.

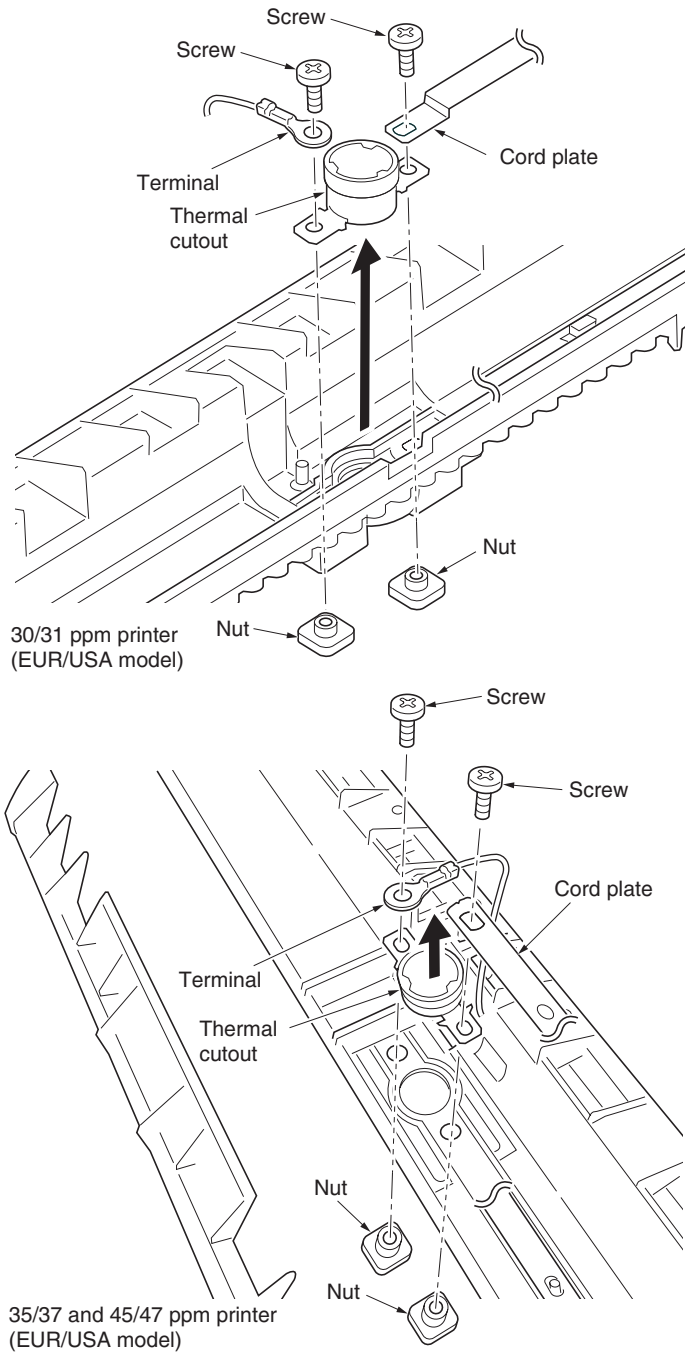

Figure 1-5-27

TONER
www.tonerplus.com.ua

1-5-8 PWBs

(1) Detaching and refitting the engine PWB

Procedure

1. Remove the fuser unit (See page P.1-5-14).
2. Remove the top cover (See page P.1-5-2).
3. Remove the left cover (See page P.1-5-3).
4. Remove the PSU fan motor (See page P.1-5-28).
5. Stand the printer front side up.
6. Remove the five screws and then remove the bottom plate1.
7. Remove the four screws and then remove the bottom plate 2.

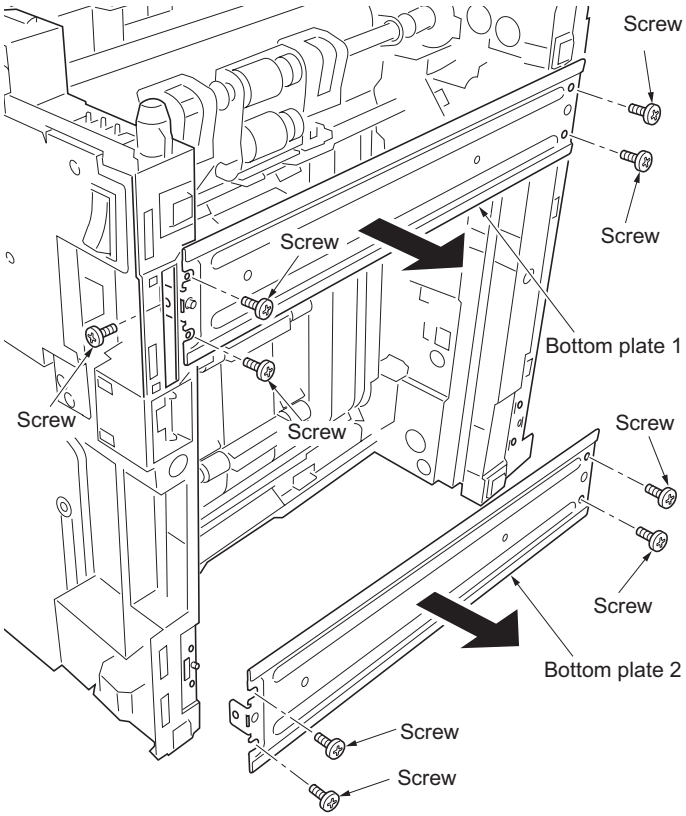

Figure 1-5-28

8. Remove the two wires from the hooks and notches.
9. Open the DU guide (duplex cover).

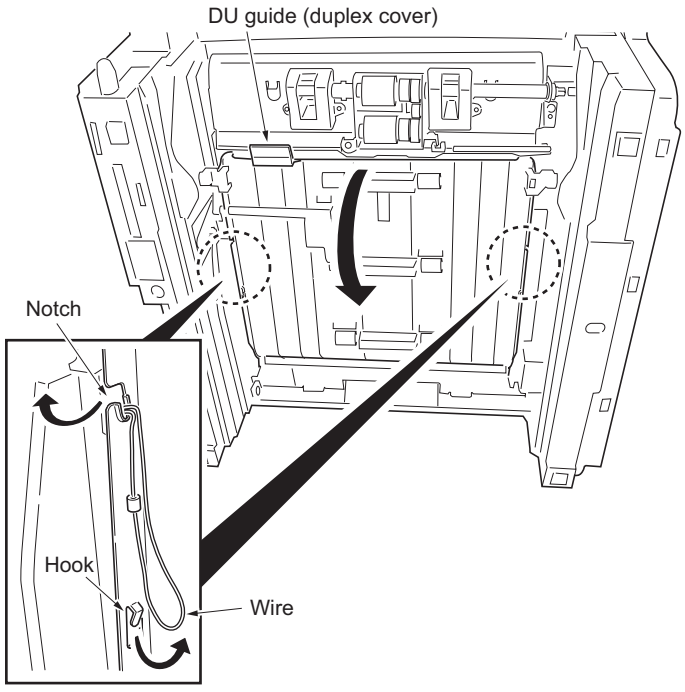

Figure 1-5-29

TONER+
www.tonerplus.com.ua

10. Detach the joint.
11. Remove the eight screws and then remove the DU base.
12. Remove the cord cover (35/37 and 45/47 ppm printer [EUR/USA model] only).
13. Remove the connector (35/37 and 45/47 ppm printer [EUR/USA model] only).
14. Remove the six screws and then remove the DU base.

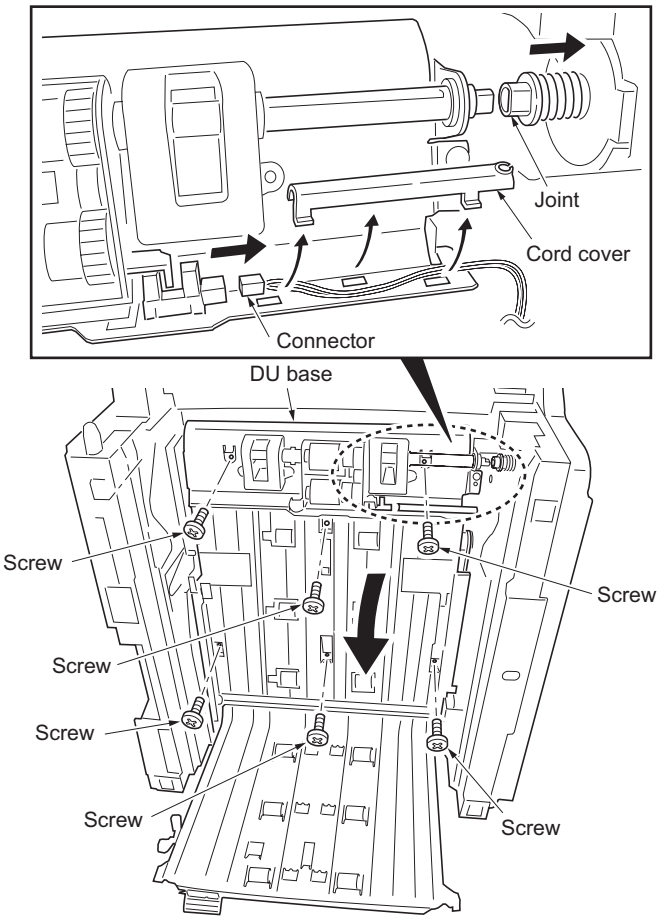

Figure 1-5-30

15. Remove the four snaps.
16. Remove the one tab.
17. Remove the one screws and then remove the grounding terminal.

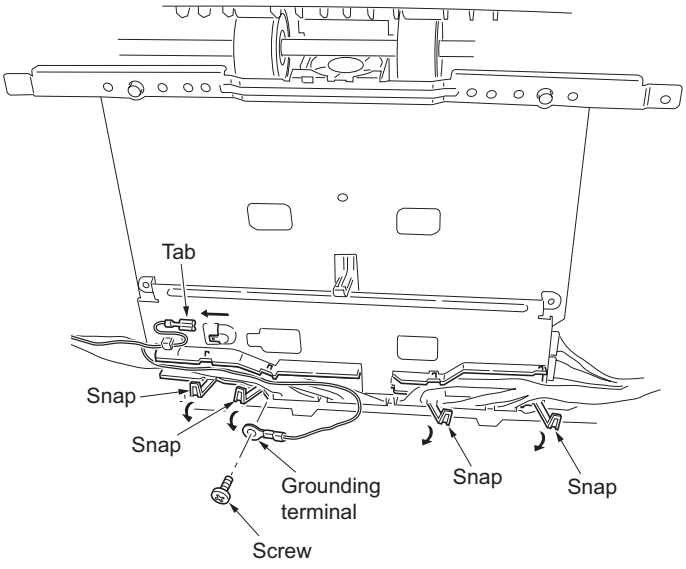

Figure 1-5-31

TONER+
www.tonerplus.com.ua

18. Remove the seven connectors (A).
19. Remove the left wire guide.
20. Remove the three screws and then remove the engine PWB assembly.
21. Remove the two connectors (B) from the engine PWB.

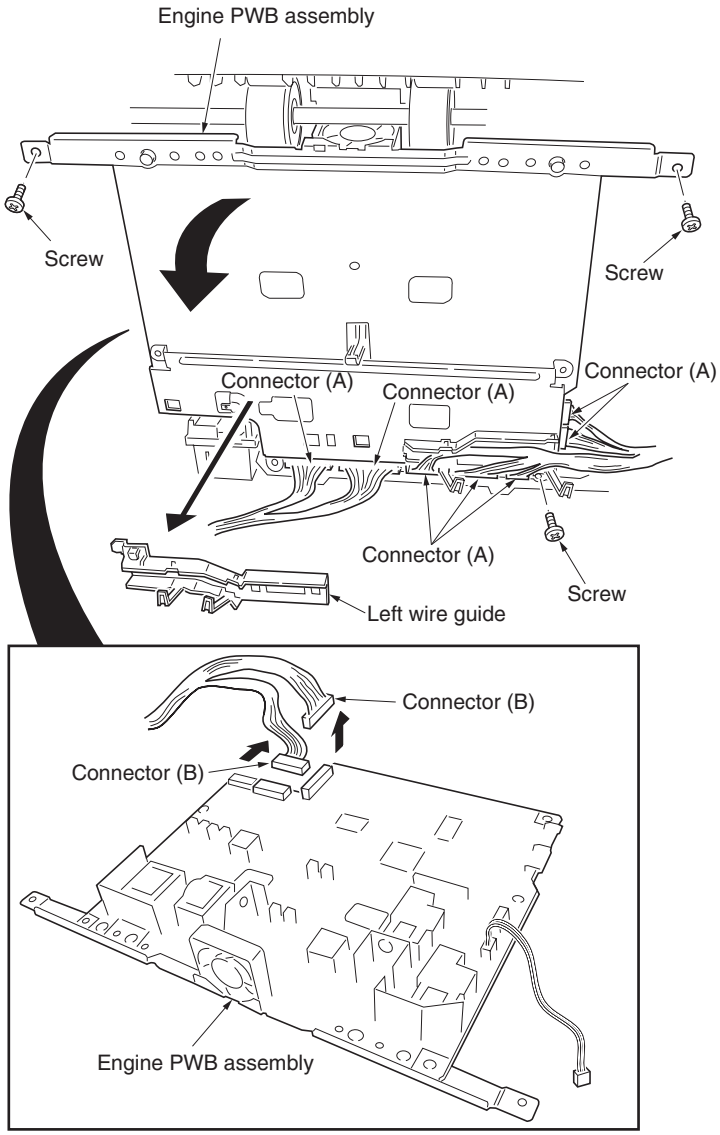

Figure 1-5-32

TONER
www.tonerplus.com.ua

22. Remove the one connector.
23. Remove the two screws (A) and then remove the HV plate.
24. Remove the two screws (B) and then remove the engine R ground plate, engine L ground plate and shield plate.
25. Check or replace the engine PWB and refit all the removed parts.
    To replace the engine PWB, remove the EEPROM from the old engine PWB and mount it to the new engine PWB.

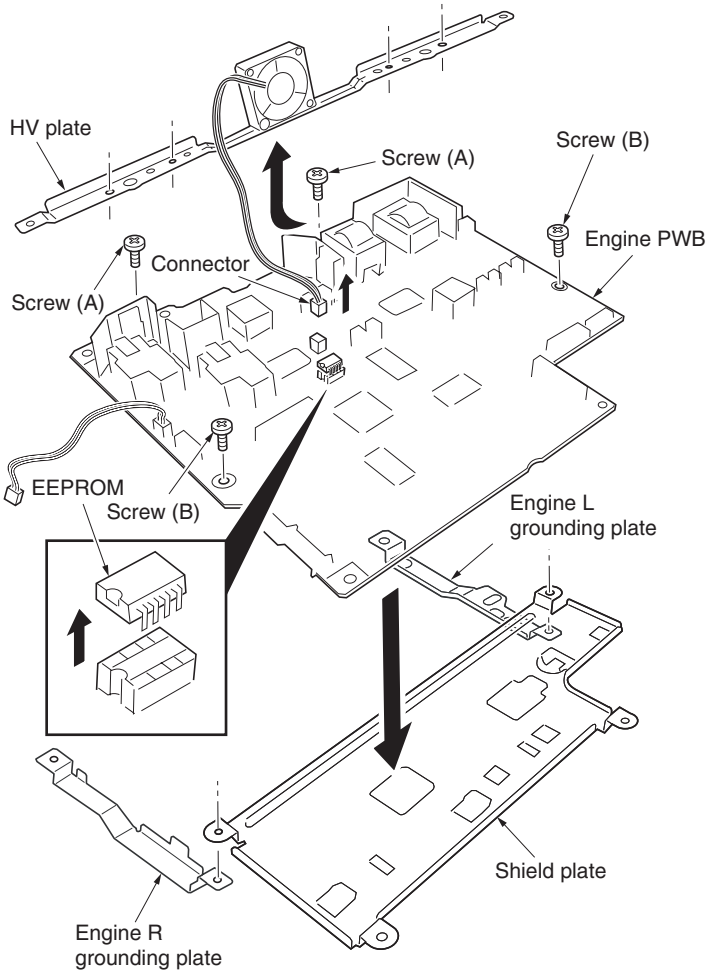

Figure 1-5-33

TONER
www.tonerplus.com.ua

(2) Detaching and refitting the main PWB

Procedure

1. Remove the top cover (See page P.1-5-2).
2. Remove the right and left cover (See page P.1-5-3).
3. Remove the six/seven connectors from the main PWB.
4. Remove the two screws and then remove the connect-R PWB.
5. Remove the wires from clamp.

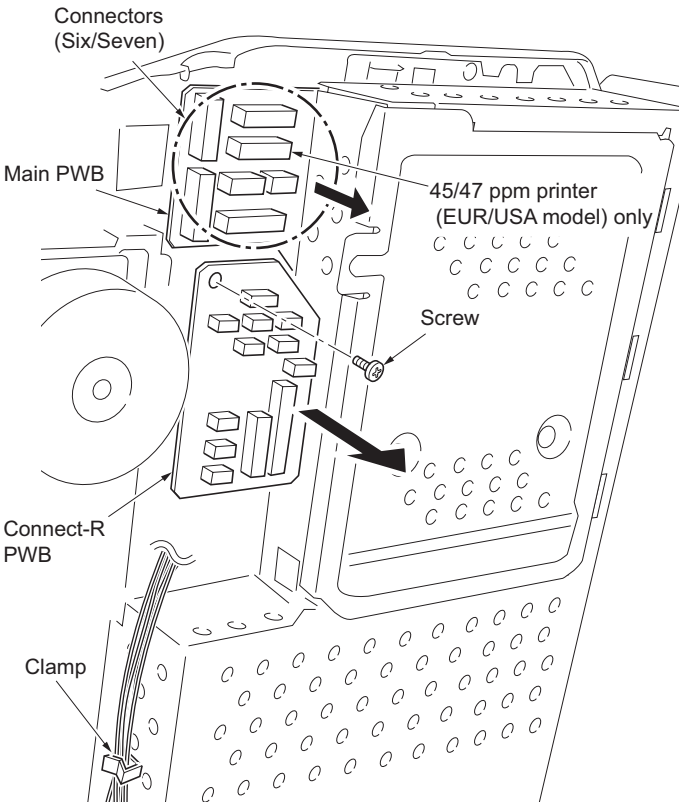

Figure 1-5-34

6. Remove the six screws and then remove the controller box (main PWB).

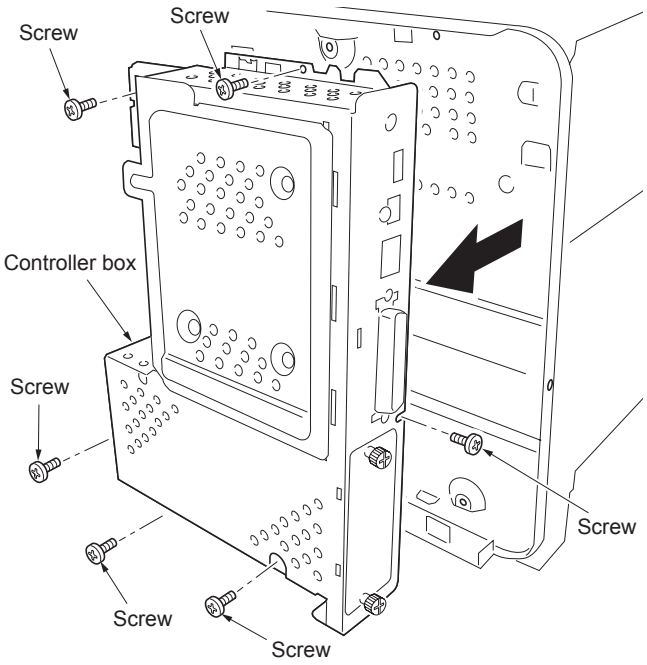

Figure 1-5-35

TONER
www.tonerplus.com.ua

7. Remove the screw and then open the inner cover.
8. Remove the connector (35/37 and 45/47 ppm printer [EUR/USA model] only).

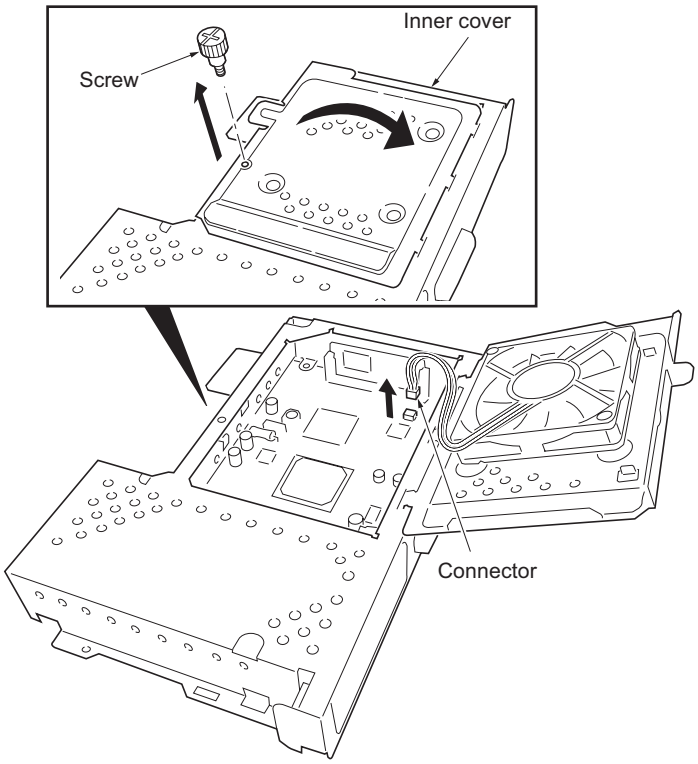

Figure 1-5-36

9. Remove the five screws and then remove the main PWB from the controller box.
10. Check or replace the main PWB and refit all the removed parts.

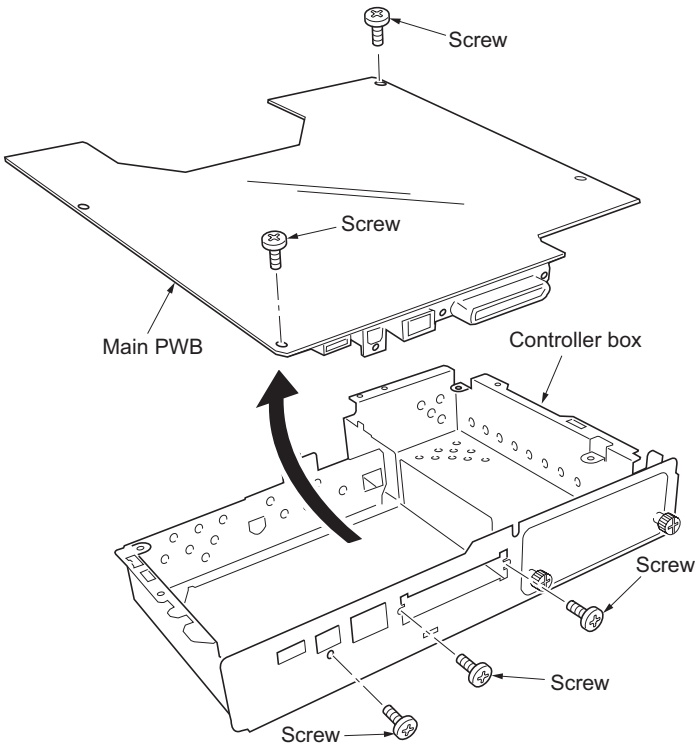

Figure 1-5-37

TONER
www.tonerplus.com.ua

(3) Detaching and refitting the power source unit

Procedure

1. Remove the top cover (See page P.1-5-2).
2. Remove the right and left cover (See page P.1-5-3).
3. Remove the one connector (YC11) form the connect-L PWB.
4. Remove the two hooks and then remove the PSU fan motor.

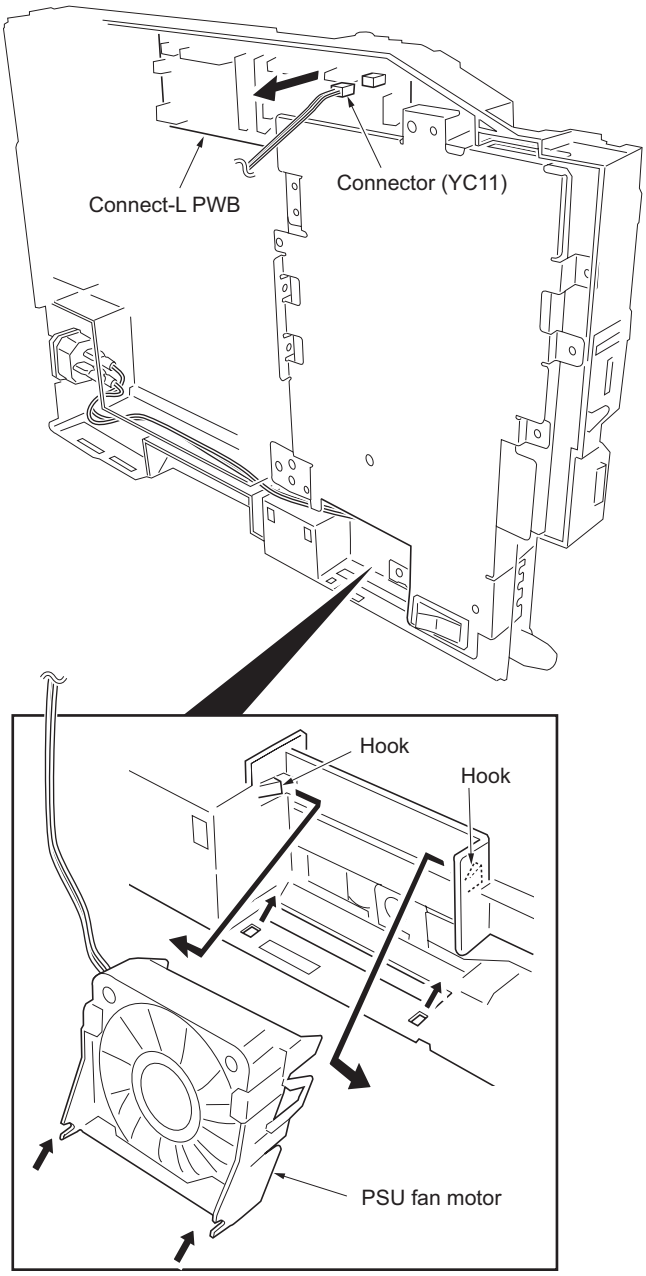

Figure 1-5-38

TONER
www.tonerplus.com.ua

5. Remove the eight screws and three grounding terminals.

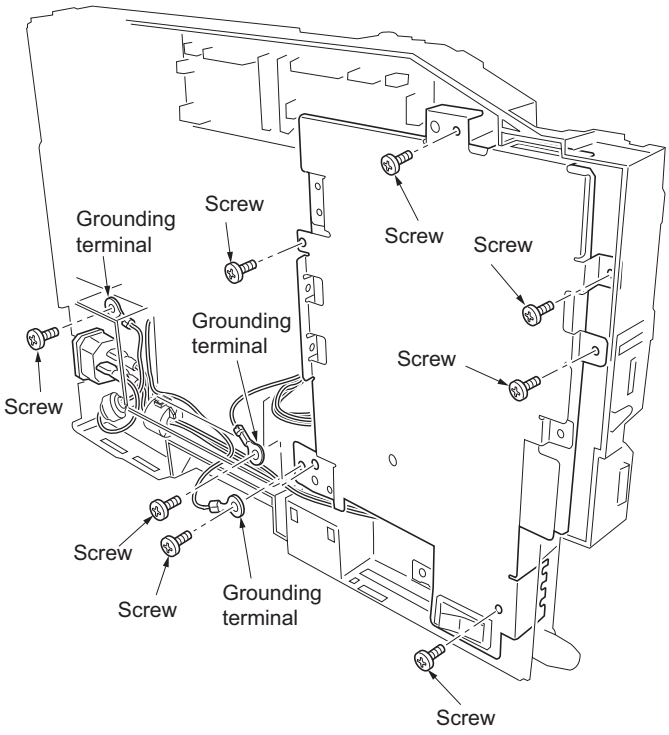

Figure 1-5-39

6. Remove the AC inlet.
7. Remove the one connector.
8. Remove the PWB connector between connect-L PWB and then remove the power source unit.
9. Remove the power source unit.
10. Check or replace the power source unit and refit all the removed parts.

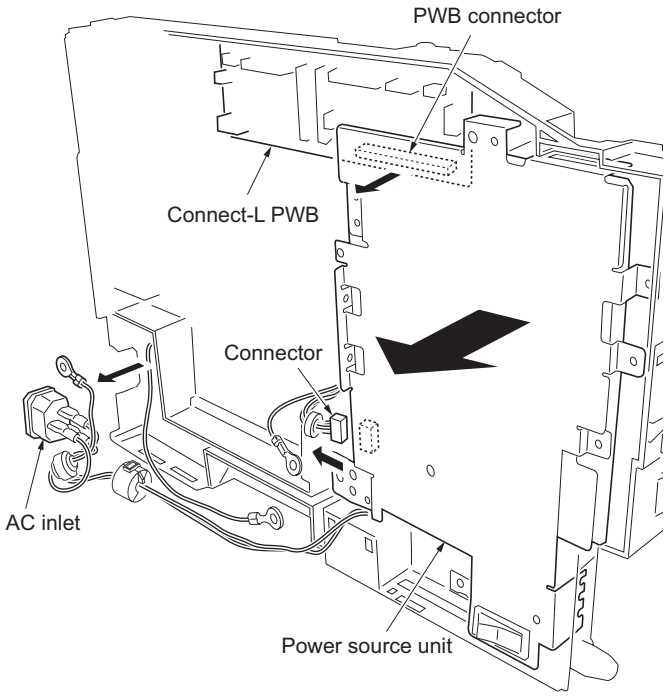

Figure 1-5-40

TONER
www.tonerplus.com.ua

1-5-9 Others

(1) Detaching and refitting the paper feed drive unit

Procedure

1. Remove the paper cassette.
2. Remove the developer unit (See page P.1-5-9).
3. Remove the top cover (See page P.1-5-2).
4. Remove the right cover (See page P.1-5-3).
5. Remove the five connectors from the connect-R PWB.
6. Remove wires from the clamp.
7. While opening the four hooks and then remove the wires.
8. Remove the right fan motor.

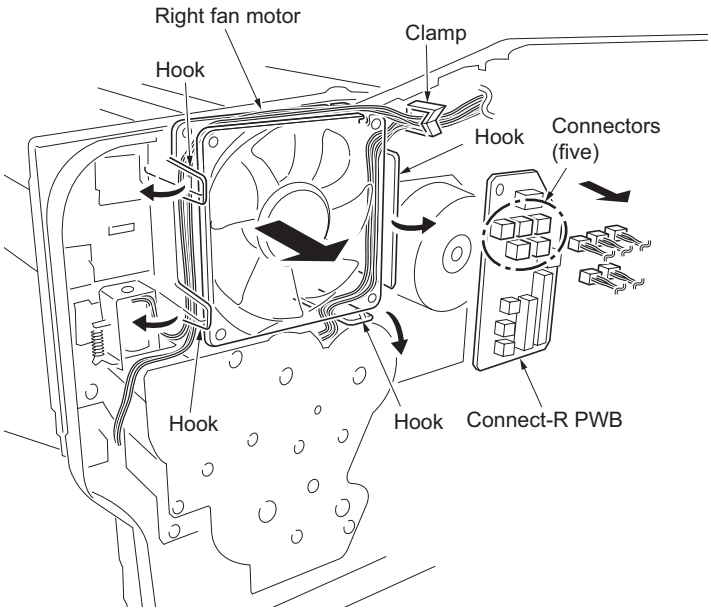

Figure 1-5-41

9. Remove the three screws and then remove the paper feed drive unit.
10. Check or replace the paper feed drive unit and refit all the removed parts.
    To refit the paper feed drive unit, make sure mesh of gears.

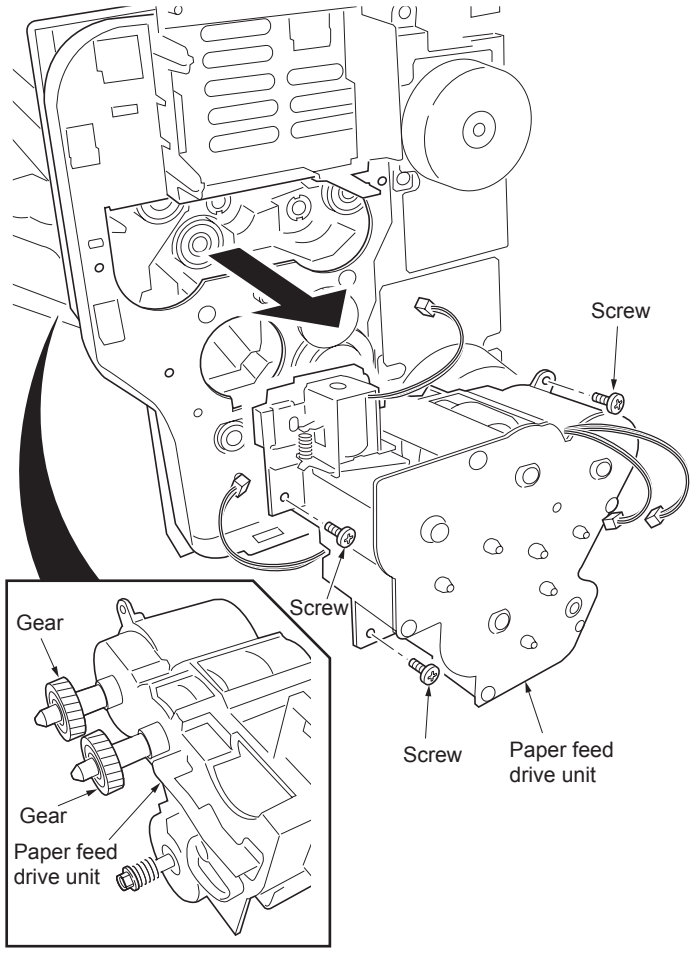

Figure 1-5-42

TONER
www.tonerplus.com.ua

(2) Detaching and refitting the main drive unit

Procedure

1. Remove the top cover (See page P.1-5-2).
2. Remove the right cover (See page P.1-5-3).
3. Remove the controller box (See page P.1-5-26).
4. Remove five screws and then remove the main drive unit.
5. Check or replace the main drive unit and refit all the removed parts.

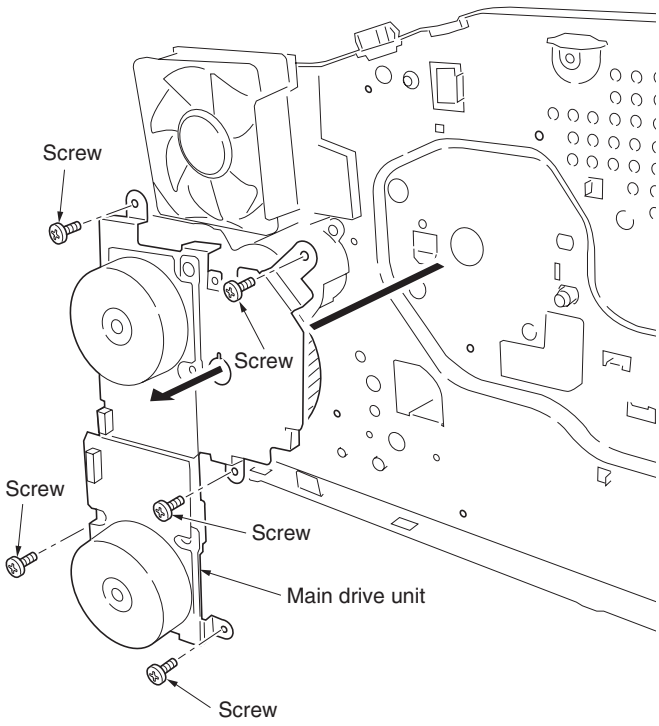

Figure 1-5-43

TONER
www.tonerplus.com.ua

(3) Detaching and refitting the laser scanner unit

Procedure

1. Remove the top cover (See page P.1-5-2).
2. Remove the right cover (See page P.1-5-3).
3. Remove the three/four connectors from the main PWB.
4. Remove the four screws and then remove the laser scanner unit.
5. Check or replace the laser scanner unit and refit all the removed parts.

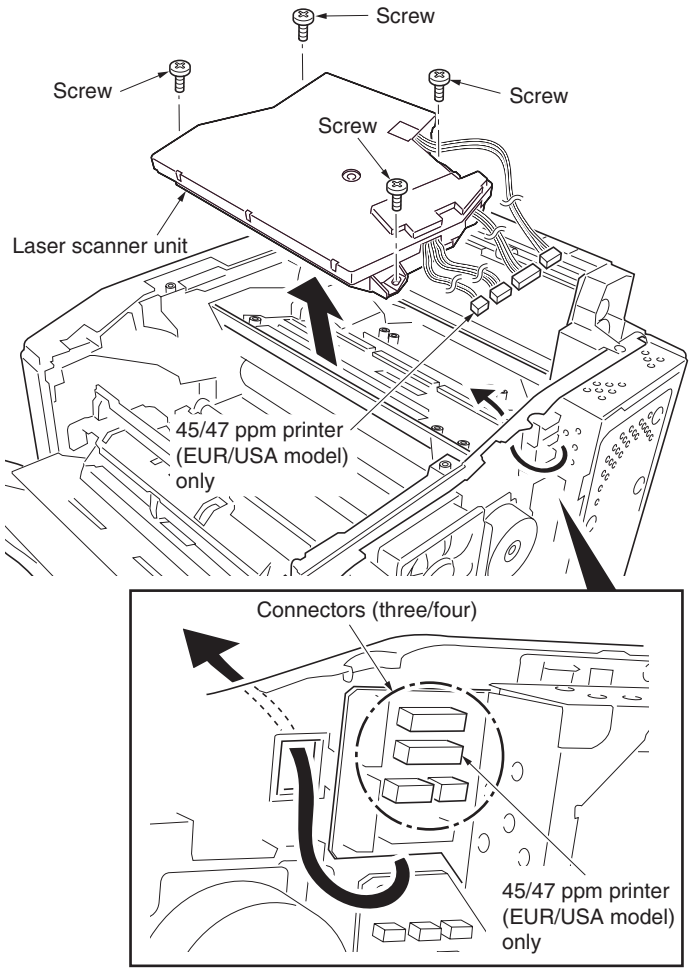

Figure 1-5-44

TONER
www.tonerplus.com.ua

1-6-1 Downloading firmware

The system firmware can be update by downloading new firmware. Downloading can be made either by directly sending the new firmware from PC via the parallel interface or using a memory card that contains the new firmware.

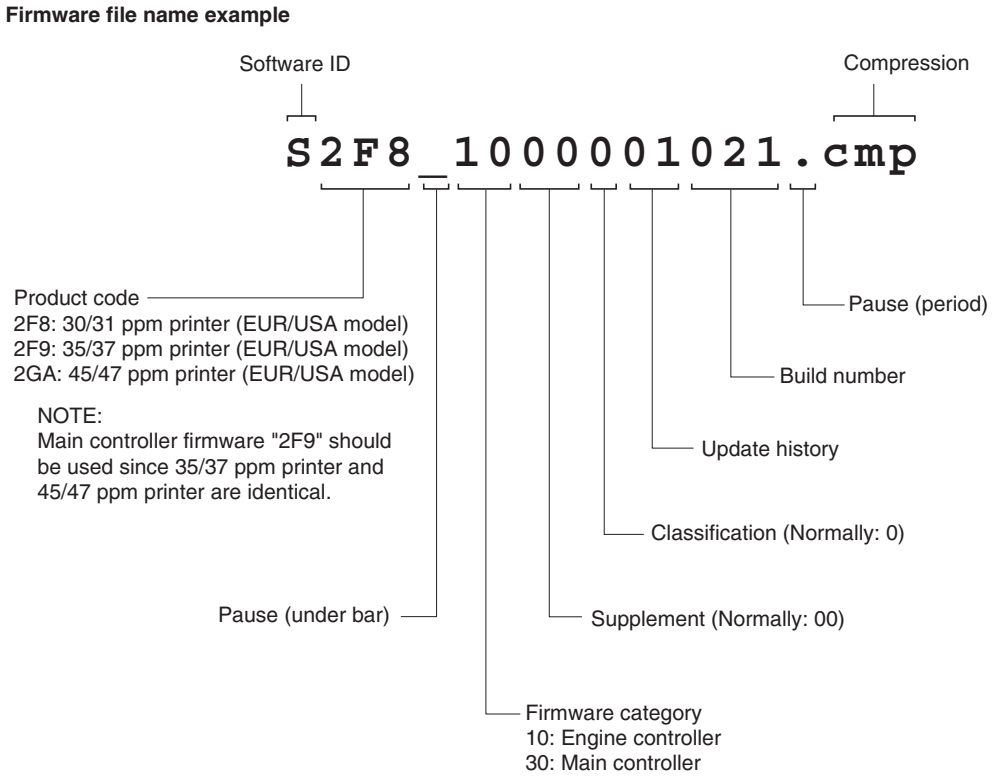

Figure 1-6-1

TONER
www.tonerplus.com.ua

(1) Downloading the firmware from the parallel interface

To download the system firmware using the parallel interface, use the procedure below.
Note that you can't download both the system and engine firmware at a time.

1. Turn printer and PC power off.
2. Connect the parallel printer cable between the PC and the printer.

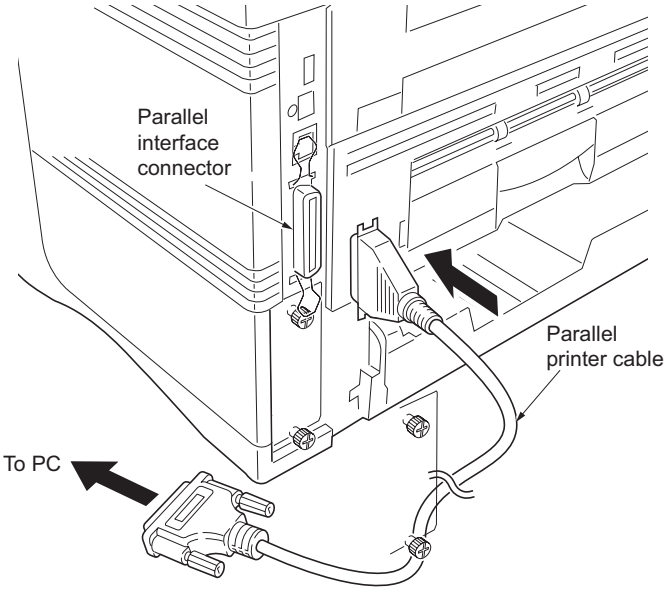

Figure 1-6-2

3. Turn printer power on.
4. Confirm that display (1) is displayed.
5. At the DOS prompt, enter command (2).
   * Enter UPGR "SYS" in capitals.
6. Confirm that message display (3) is displayed.
7. At the DOS prompt, enter command (4) so that the system firmware (example: S2GA_3000001021.cmp) is copied to the printer.
8. Message display (5) is displayed during downloading. When message display (6) is displayed to indicate downloading is finished, turn printer power off and then turn on.
9. Confirm that message display (7) is displayed after warm-up.
10. Print a status page. Check that the status page shows the updated firmware version.

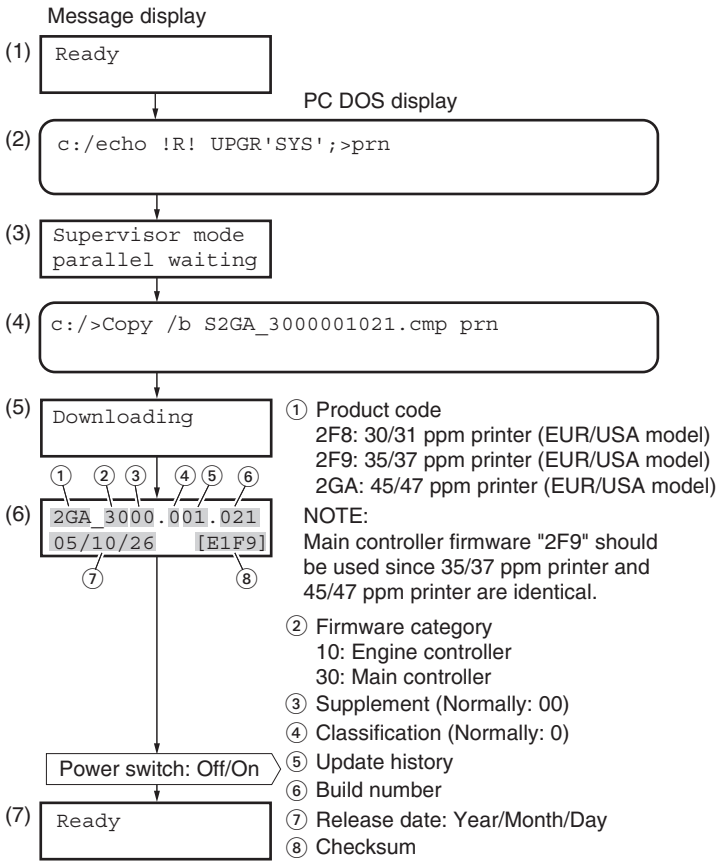

Figure 1-6-3

TONER
www.tonerplus.com.ua

(2) Downloading the firmware from the memory card

The procedure below provides how to download firmware from a memory card.
Note that you can download both the system and engine firmware at a time.

1. Turn printer power off.
2. Remove two screws and then remove the interface slot cover.
3. Insert the memory card into the printer's memory card slot.

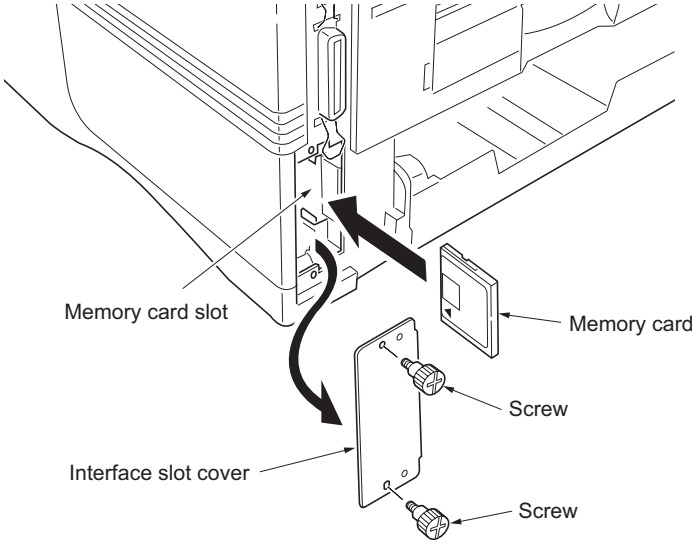

Figure 1-6-4

4. Turn printer power on.
5. Press Menu key on the printer's operation panel and carry out the memory card formatting procedure (1).
6. When formatting is complete, turn printer power off.

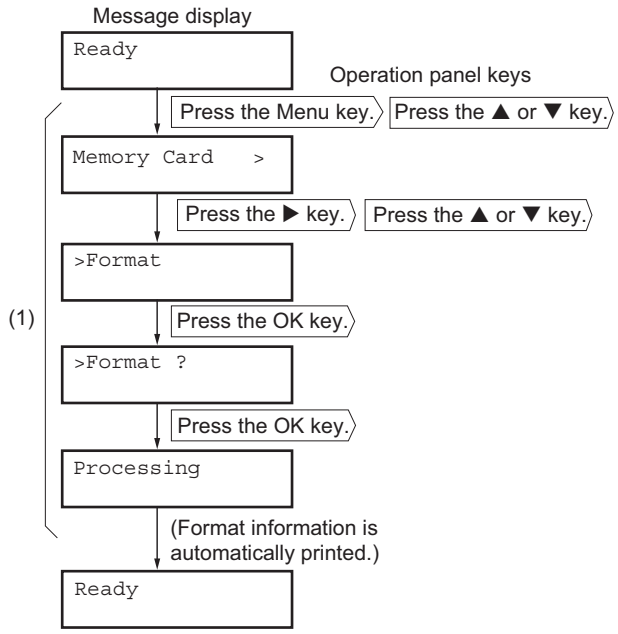

Figure 1-6-5

7. Remove the formatted memory card from the memory card slot.
8. Insert the memory card to the PC's slot or to the adaptor.
9. Copy the firmware file to download to the root directory of the memory card.
10. Remove the memory card from the PC's slot or the adaptor.

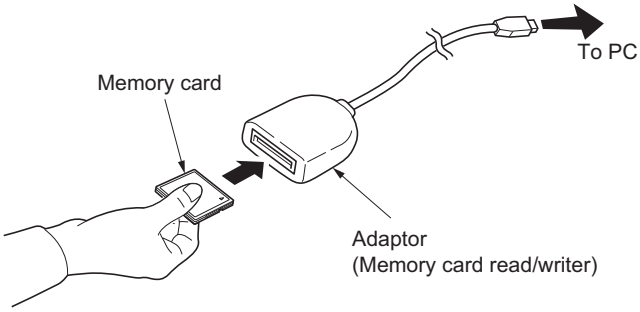

Figure 1-6-6

TONER
www.tonerplus.com.ua

11. Confirm that the printer's power switch is set to off.
12. Insert the memory card into the printer's memory card slot.

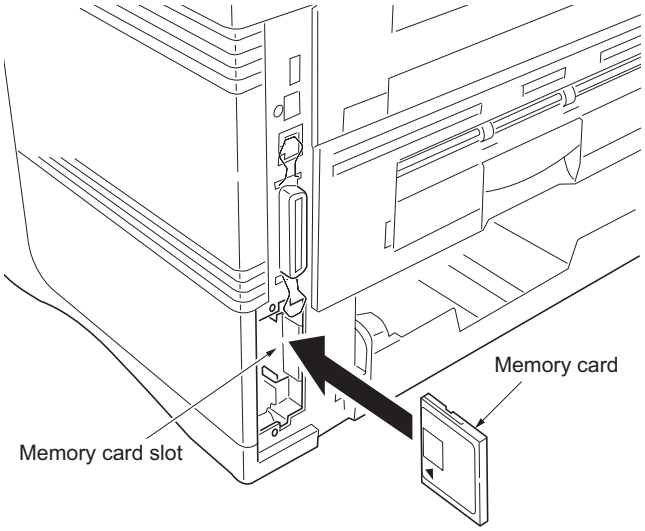

Figure 1-6-7

13. Turn printer power on.
14. When message display (1) is displayed to detect firmware in the memory card.
15. Message display (2) is displayed during downloading.
16. When message display (3) is displayed to indicate downloading is finished.
17. Turn printer power off.
18. Remove the memory card from memory card slot.
19. Turn printer power on.
20. Confirm that message display (4) is displayed after warm-up.
21. Print the status page. Print the status page to check that the firmware version has been updated.

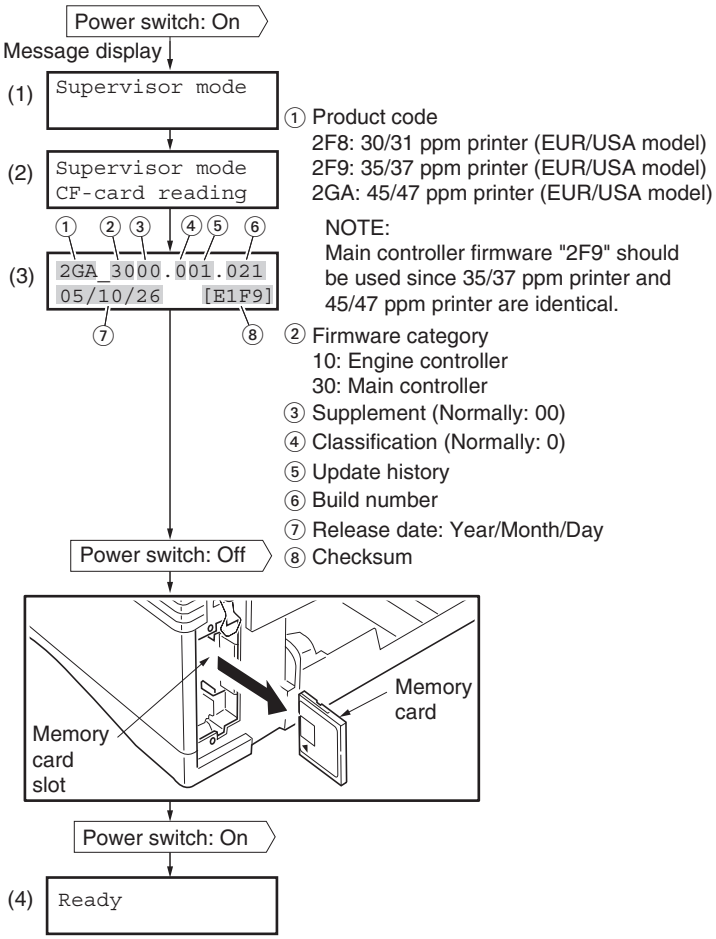

Figure 1-6-8

TONER
www.tonerplus.com.ua

(3) Downloading the firmware from the USB memory

The procedure below provides how to download firmware from a memory card.
Note that you can't download both the system and engine firmware at a time.

1. Turn printer power off.
2. Connect the USB memory to the PC.
3. Copy the firmware file to the root directory of the USB memory.
4. Remove the USB memory from the PC and then insert the USB memory into the printer's USB memory slot.

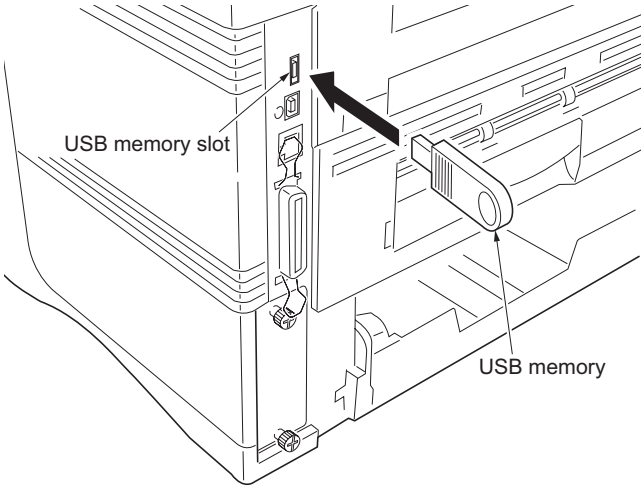

Figure 1-6-9

5. Turn printer power on.
6. When message display (1) is displayed to detect firmware in the USB memory.
7. Message display (2) is displayed during downloading.
8. When message display (3) is displayed to indicate downloading is finished.
9. Turn printer power off.
10. Remove the USB memory from USB memory slot.
11. Turn printer power on.
12. Confirm that message display (4) is displayed after warm-up.
13. Print the status page. Print the status page to check that the firmware version has been updated.

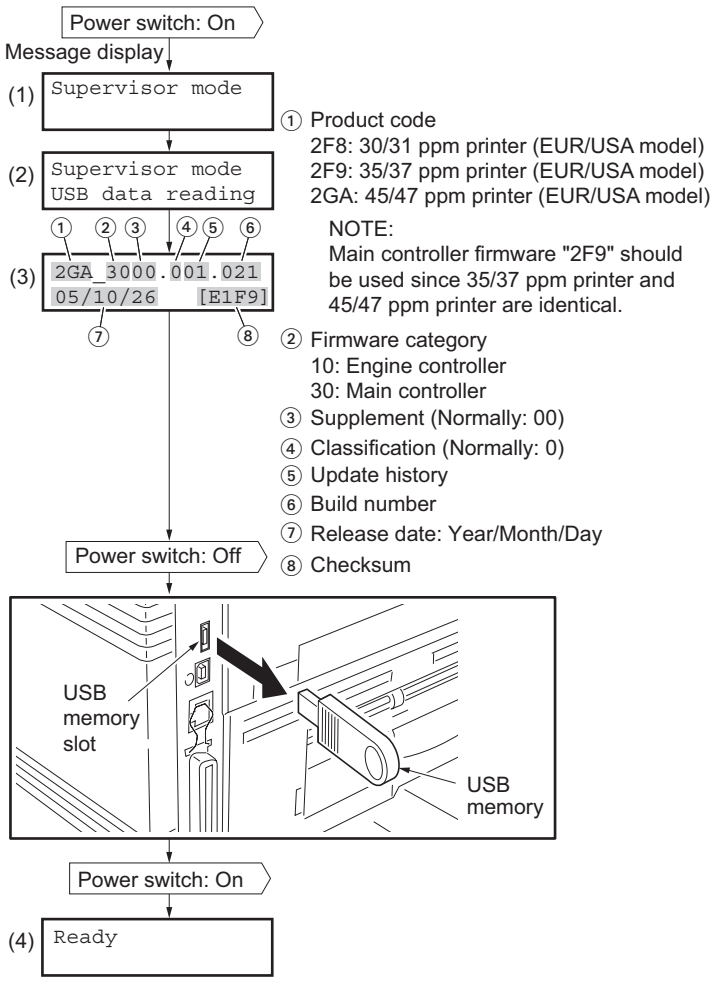

Figure 1-6-10

TONER
www.tonerplus.com.ua

This page is intentionally left blank.

TONER
www.tonerplus.com.ua

2-1-1 Paper feed section

Paper feed section consists of the paper feed unit that feeds paper from the paper cassette and the MP tray paper feed unit that feeds paper from the MP tray, and the paper feed conveying section that conveys the fed paper to the transfer/ separation section.

(1) Paper cassette paper feed section

Paper cassette is the universal type that is applicable to various paper sizes by adjusting the side guides and paper stopper and approximate 500 pages can be put in. Mechanism in the paper cassette consists of the bottom plate that lifts the paper in order to let it touch the pickup roller and the retard roller that prevents papers from multiple feeding. Paper that is drawn out by the rotation of pickup roller of the paper cassette paper feed section is then sent in between the feed roller and the retard roller. Function of the built-in torque limiter in the retard roller gives weak resistance force against the rotation. Normally, when only a page is drawn out by the rotation of pickup roller, the paper is conveyed to the printer by the rotation of feed roller on its own. If the pickup roller drew out two lapped pages someway, the upper paper is conveyed by the feed roller and the lower paper stays due to the rotation resistant force of the retard roller because the friction force between papers is smaller than the rotation resistance force of the retard roller and then the multiple paper feed can be prevented.

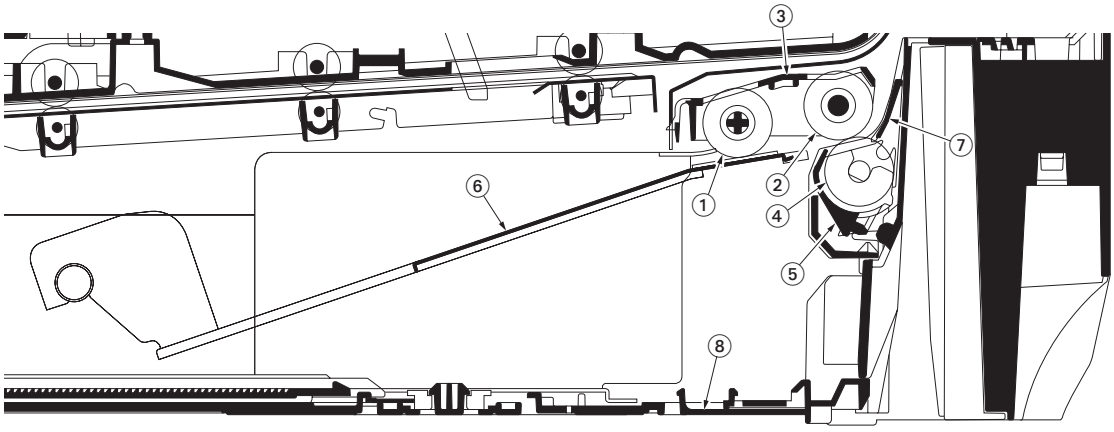

Figure 2-1-1 Paper cassette paper feed section

(1)	Pickup roller	(5)	Retard holder
(2)	Paper feed roller	(6)	Bottom plate
(3)	Feed holder	(7)	Retard guide
(4)	Retard roller	(8)	Cassette base

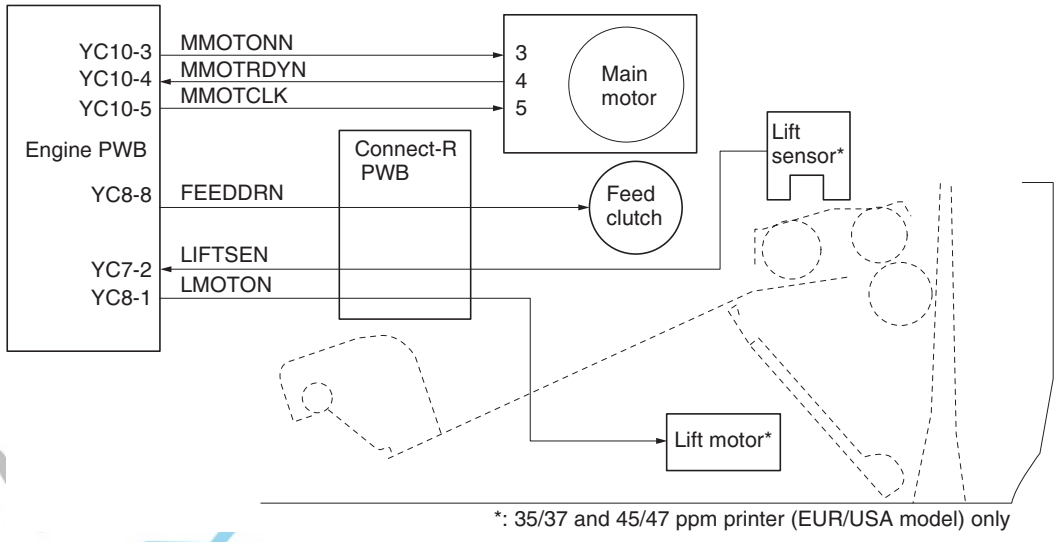

www.tonerplus.com.ua

Figure 2-1-2 Paper cassette paper feed section block diagram

(2) MP tray paper feed section

The MP tray can contain about 100 pages. Feeding is performed by the rotation of the MP tray feed roller from the MP tray. Function of the MP tray friction pad prevents papers from multiple feeding.

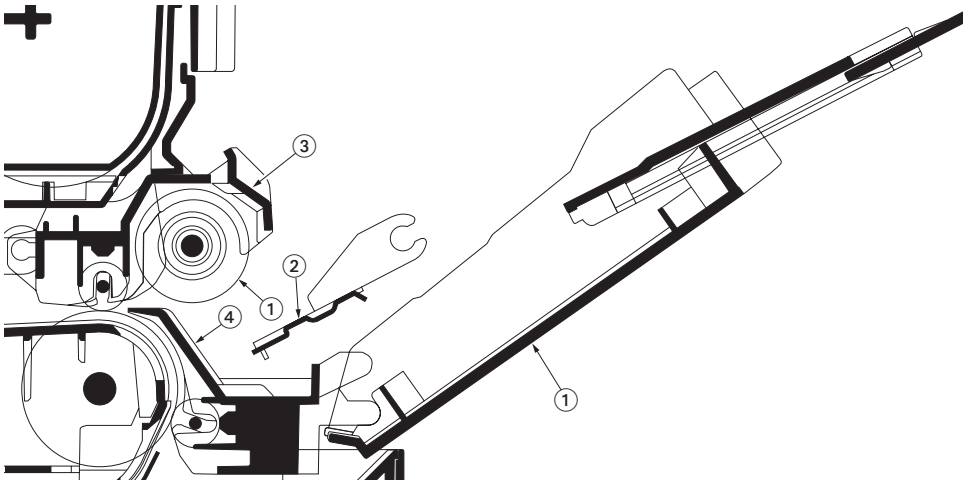

Figure 2-1-3 MP tray paper feed section

(1) MP tray paper feed roller
(2) Bottom plate
(3) MP tray frame
(4) MPF base
(5) MP tray cover

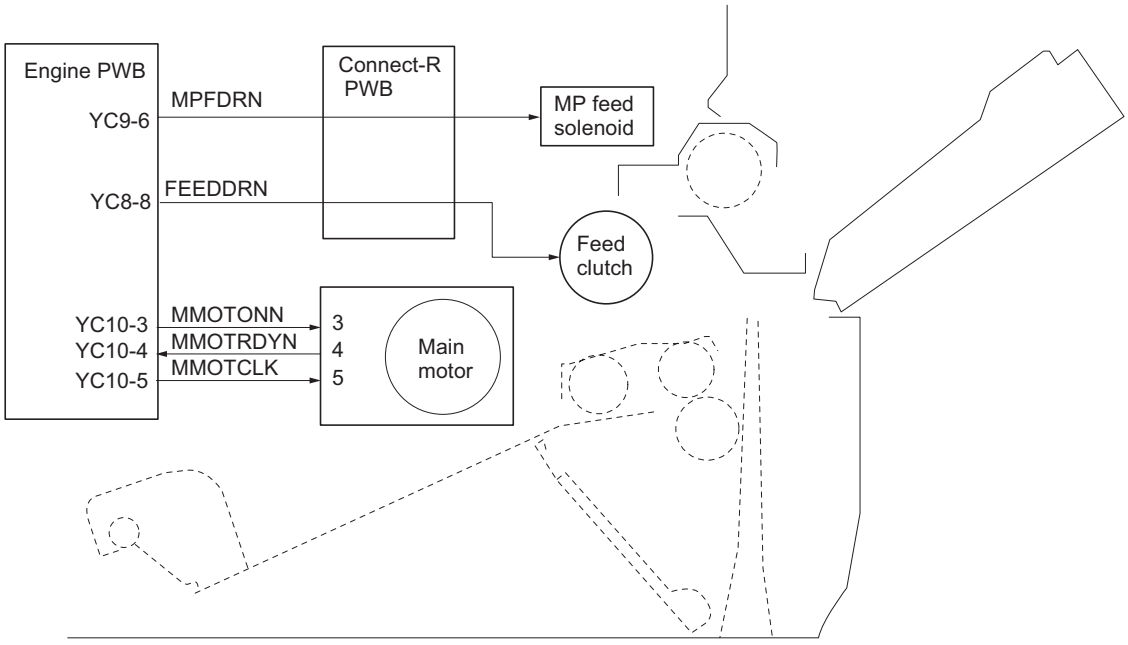

Figure 2-1-4MP tray paper feed section block diagram

TONER
www.tonerplus.com.ua

(3) Paper feed conveying section

The conveying section consists of the parts shown in the following illustration and conveys papers from the paper cassette or the MP tray to the transfer/separation section when papers are fed. Paper by feeding or refeeding is conveyed by the middle feed roller to the position where the registration sensor is turned on, and then sent to the transfer/separation section by the upper registration roller and lower registration roller.

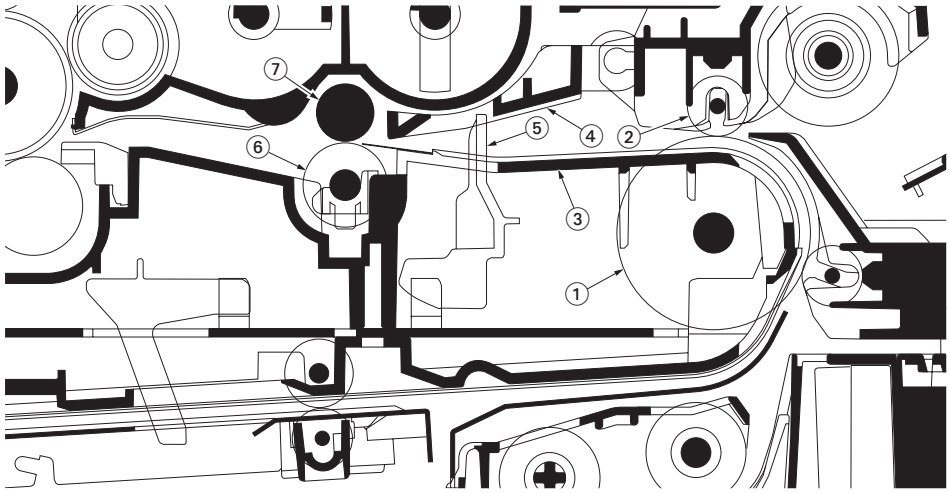

Figure 2-1-5Paper feed conveying section

(1) Middle feed roller
(2) Feed DU pulley
(3) Feed frame
(4) Registration upper guide
(5) Registration sensor (actuator)
(6) Registration lower roller
(7) Registration upper roller

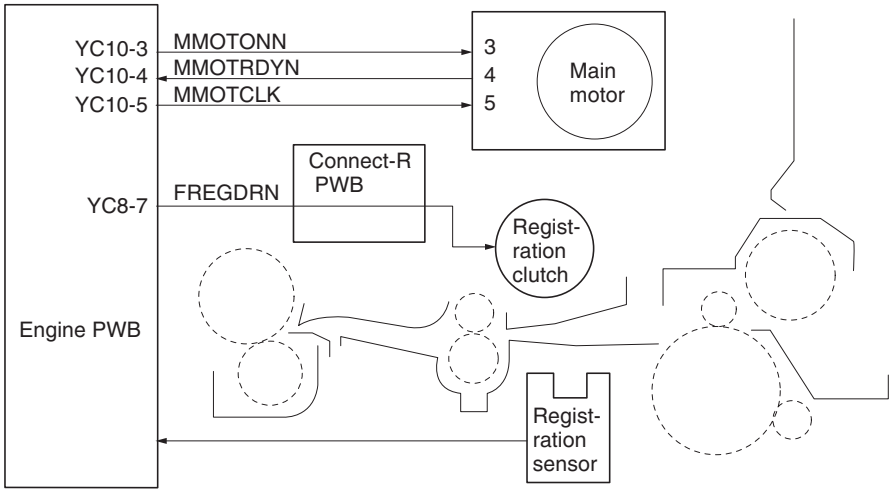

Figure 2-1-6Paper feed conveying section block diagram

TONER
www.tonerplus.com.ua

2-1-2 Drum section

(1) Drum section

The drum unit includes a photoconductive drum, eraser lamp, cleaning blade and, a main charger unit. The drum unit is removable with the main charger unit.

.

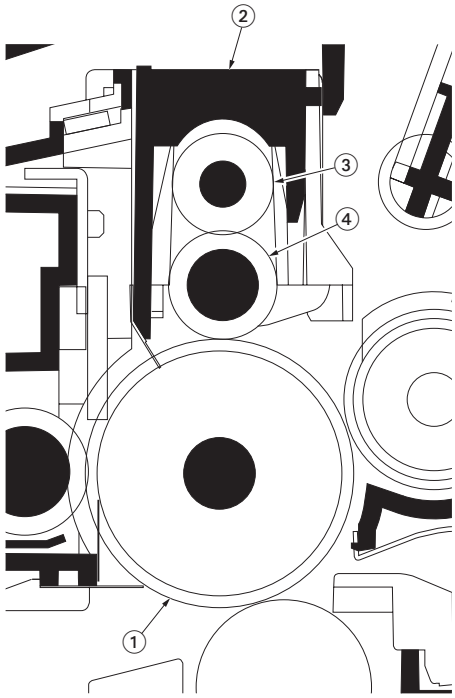

Figure 2-1-7 Drum section

(1) Drum
(2) Main charger case
(3) Charger roller cleaning roller
(4) Main charger roller

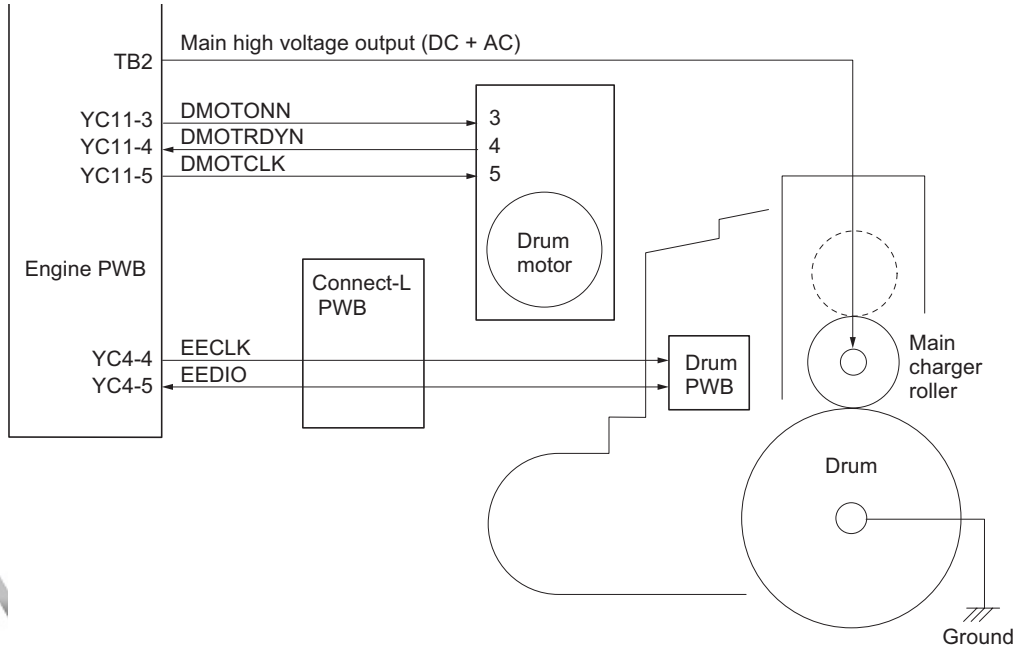

TONER
www.tonerplus.com.ua

Figure 2-1-8Drum section block diagram

2-1-3 Expose section

(1) Laser scanner unit

The charged surface of the drum is then scanned by the laser beam from the laser scanner unit. The laser beam is dispersed as the polygon motor revolves to reflect the laser beam over the drum. Various lenses and mirror are housed in the laser scanner unit, adjust the diameter of the laser beam, and focalize it at the drum surface.

Figure 2-1-9Laser scanner unit

(1) Polygon motor (polygon mirror)
(2) f-θ sub lens
(3) f-θ main lens
(4) Direction change mirror
(5) Protective glass

TONER+
www.tonerplus.com.ua

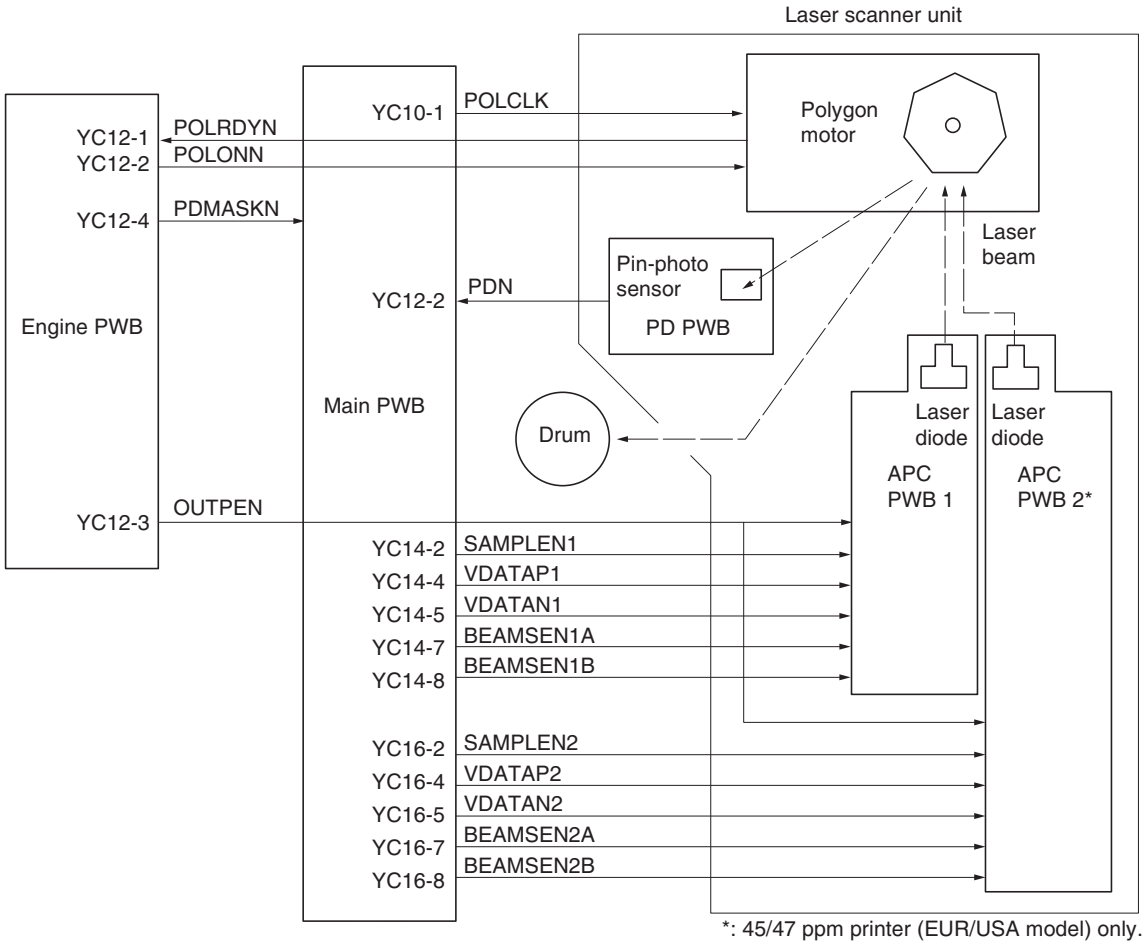

Figure 2-1-10Laser scanner unit block diagram

TONER
www.tonerplus.com.ua

2-1-4 Developing section

(1) Developing section

The developing section consists of the developer unit and the toner container. The developer unit consists of the developing roller where a magnetic brush is formed, the doctor blade and the agitator A and B that agitate the toner. Also, the toner sensor checks whether or not toner remains in the developer unit.

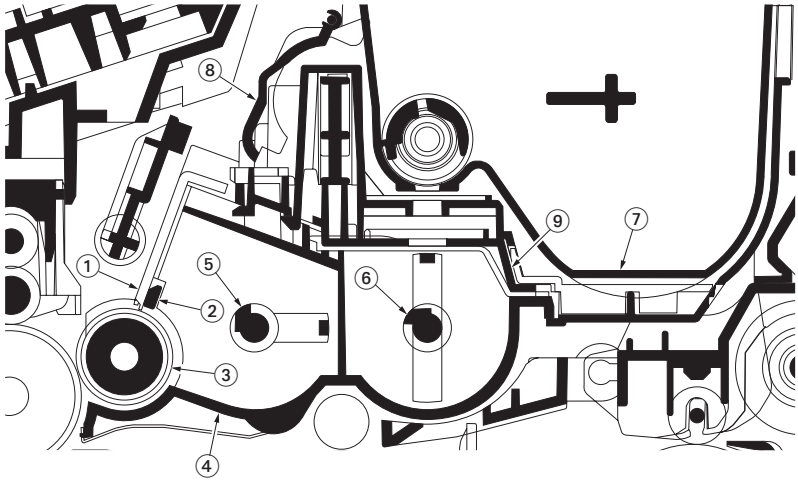

Figure 2-1-11Developing section

(1) Developing blade
(2) Blade magnet
(3) Developing roller
(4) Developer case
(5) Agitator A
(6) Agitator B
(7) Toner container
(8) Sleeve cover
(9) Developer lid

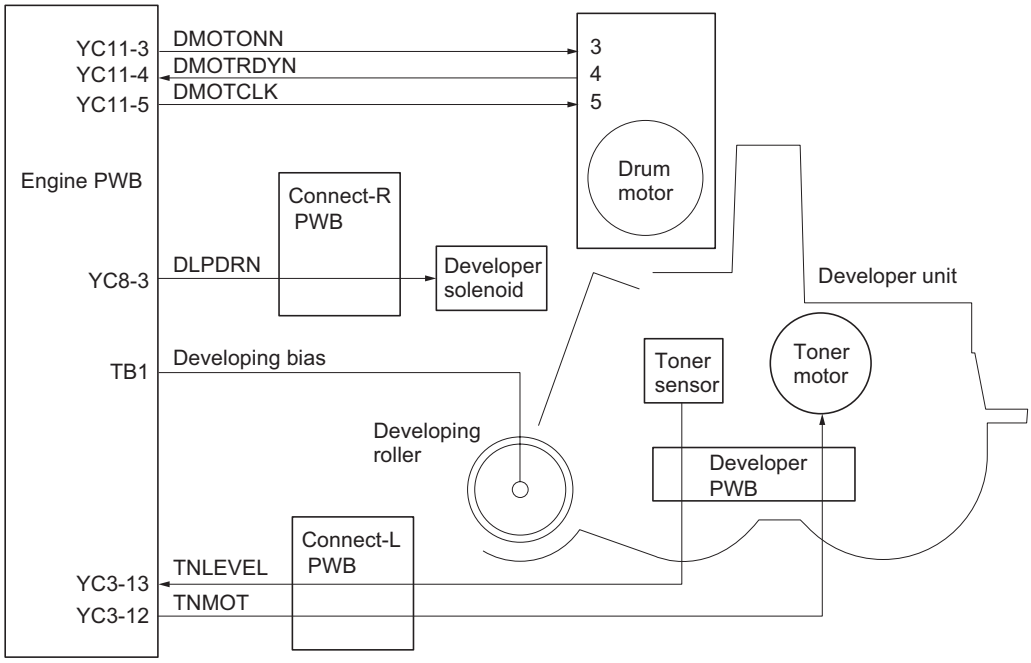

Figure 2-1-12Developing section block diagram

TONER
www.tonerplus.com.ua

2-1-5 Transfer/separation section

(1) Transfer/separation section

The image developed by toner on the drum is transferred onto the paper because of the electrical attraction between the toner itself and the transfer roller. The transfer roller is negatively biased so that the positively charged toner is attracted onto the paper while it is pinched by the drum and the transfer roller.

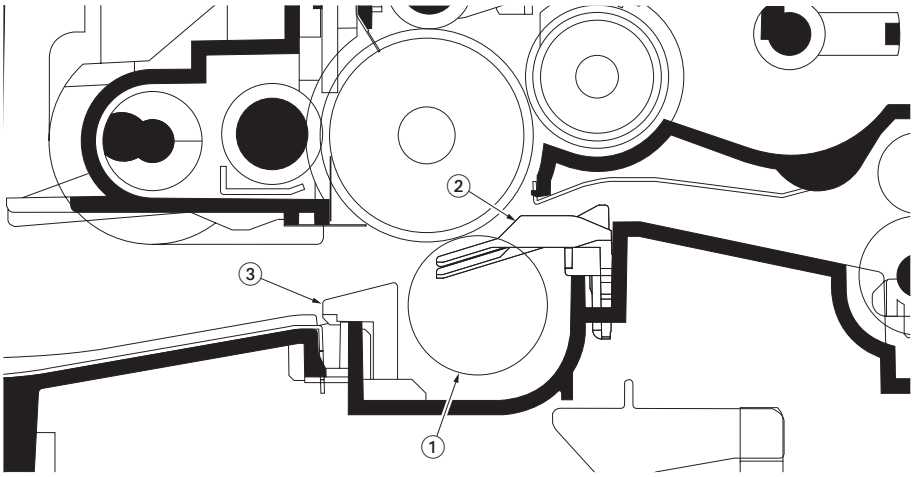

Figure 2-1-13Transfer/separation section

(1) Transfer roller
(2) Paper chute guide
(3) Separation brush

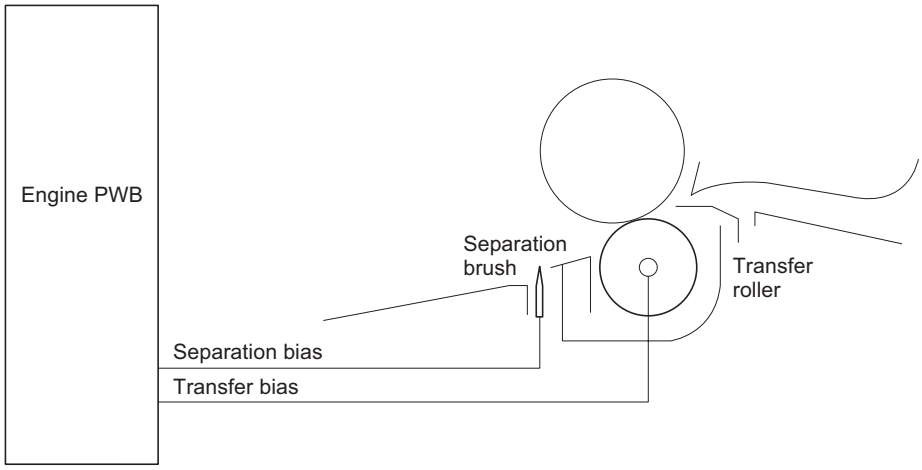

Figure 2-1-14Transfer /separation section block diagram

TONER
www.tonerplus.com.ua

2-1-6 Cleaning section

After the transferring process, the drum needs to be physically cleaned of toner which is residual after the development process. The cleaning blade is constantly pressed against the drum and scrapes the residual toner off to the cleaning roller. The waste toner is collected at the output end of the drum screw and sent to the waste toner box.
After the drum is physically cleaned, it then must be cleaned to the electrically neutral state. This is necessary to erase any residual positive charge, ready to accept the uniform charge for the next print process. The residual charge is canceled by exposing the drum to the light emitted from the eraser lamp (PWB). This lowers the electrical conductivity of the drum surface making the residual charge on the drum surface escape to the ground.

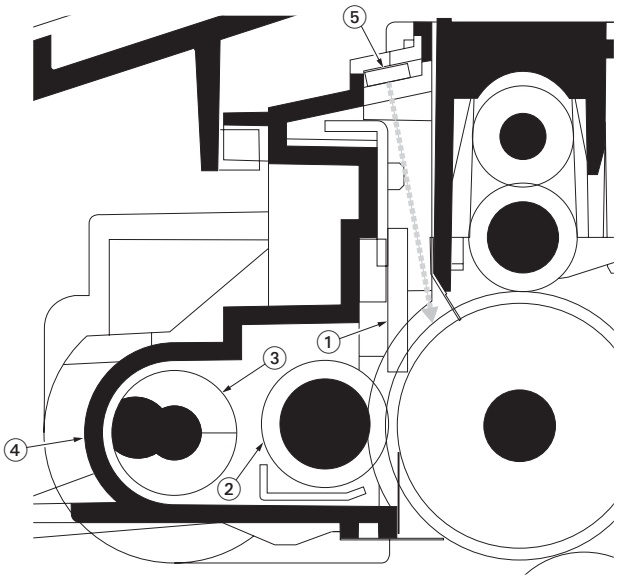

Figure 2-1-15Cleaning section

(1) Cleaning blade
(2) Cleaning roller
(3) Drum screw
(4) Drum frame
(5) Eraser lamp (PWB)

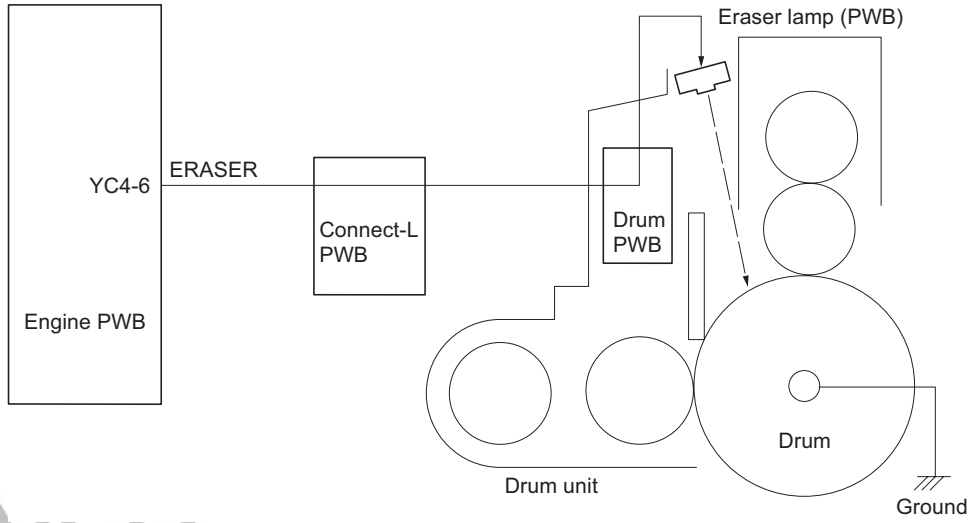

TONER
www.tonerplus.com.ua

Figure 2-1-16Cleaning section block diagram

2-1-7 Fuser section

(1) Fuser unit

The fuser section consists of the following parts and fixes the toner that is transferred to the paper at the transfer/separation section. The paper sent from the transfer/separation section is interleaved between the heat roller and the press roller. The heat roller is heated by the fuser heater lamp installed inside, and the toner is fused by heat and pressure and fixed onto the paper because the press roller is pressed by the fuser press spring. The fuser thermistor detects the temperature of the surface on the heat roller heated by the fuser heater lamp and this temperature is controlled by the engine PWB. If the fuse section shows extremely high temperature, the power line will be shut off and the fuser heater lamp is forced to turn off. When fusing of toner is complete, the paper is separated from he heat roller by the separator and ejected to the paper eject section/rear unit.

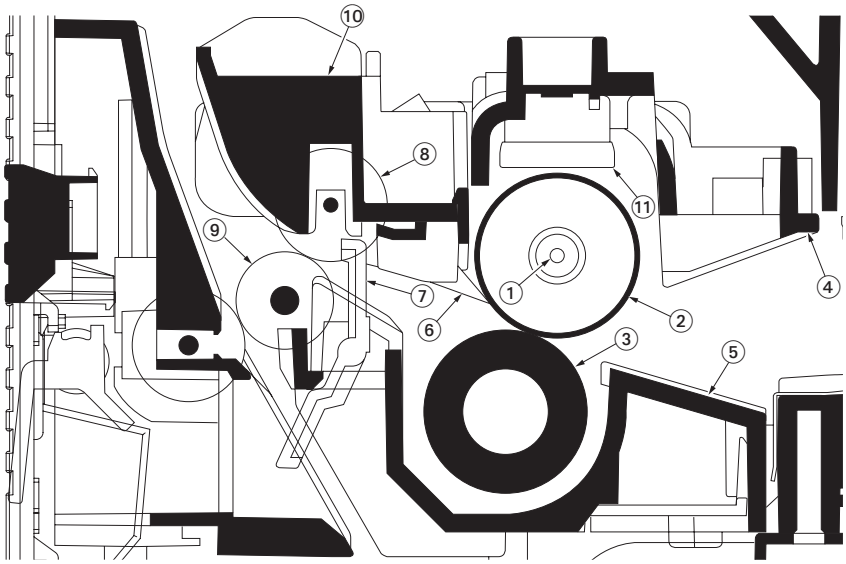

30/31 ppm printer
(EUR/USA model)

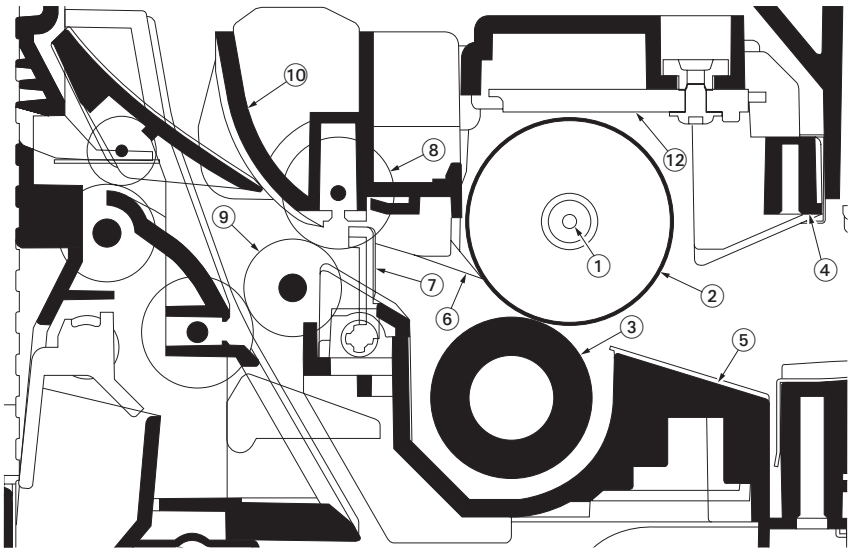

35/37 and 45/47
ppm printer
(EUR/USA model)

Figure 2-1-17Fuser unit

(1) Fuser heater lamp
(2) Heat roller
(3) Press roller
(4) Fuser upper frame
(5) Fuser lower frame
(6) Separator
(7) Paper exit sensor (actuator)
(8) Paper exit pulley
(9) Paper exit roller
(10) Feed guide
(11) Fuser thermal cutout
(12) Fuser thermistor M

TONER
www.tonerplus.com.ua

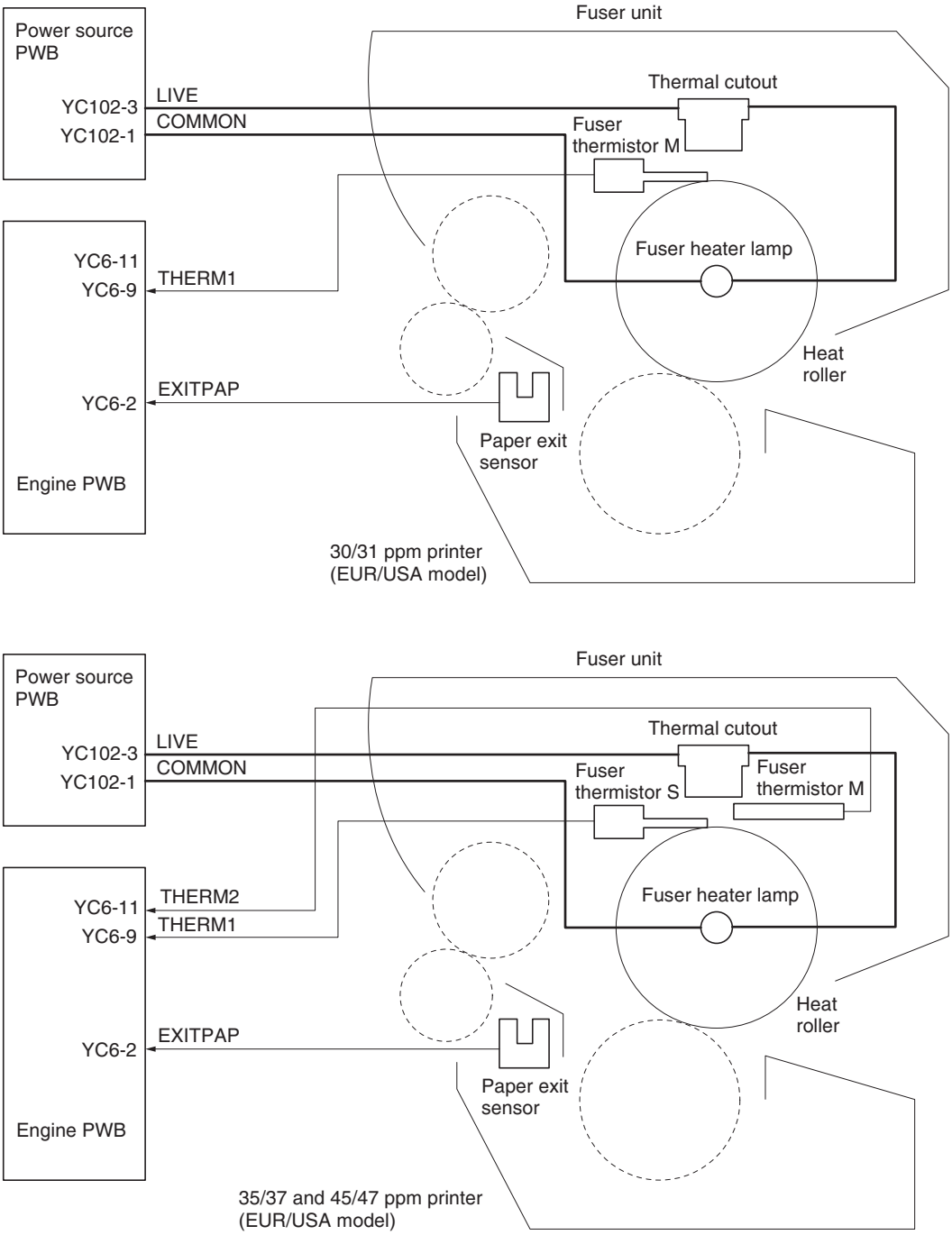

Figure 2-1-18Fuser section block diagram

TONER
www.tonerplus.com.ua

2-1-8 Paper exit section/rear unit

(1) Paper exit section/rear unit

The paper exit section transports the paper which passed the fuser unit towards the top tray. The paper which passed through the fuser unit turns on the paper exit sensor which is driven by the fuser actuator in the fuser unit, and is led by the guide comprised of the rear cover and the frame, finally reaching the face down upper roller. The paper is delivered to the top tray by the rotation of the face down upper roller.

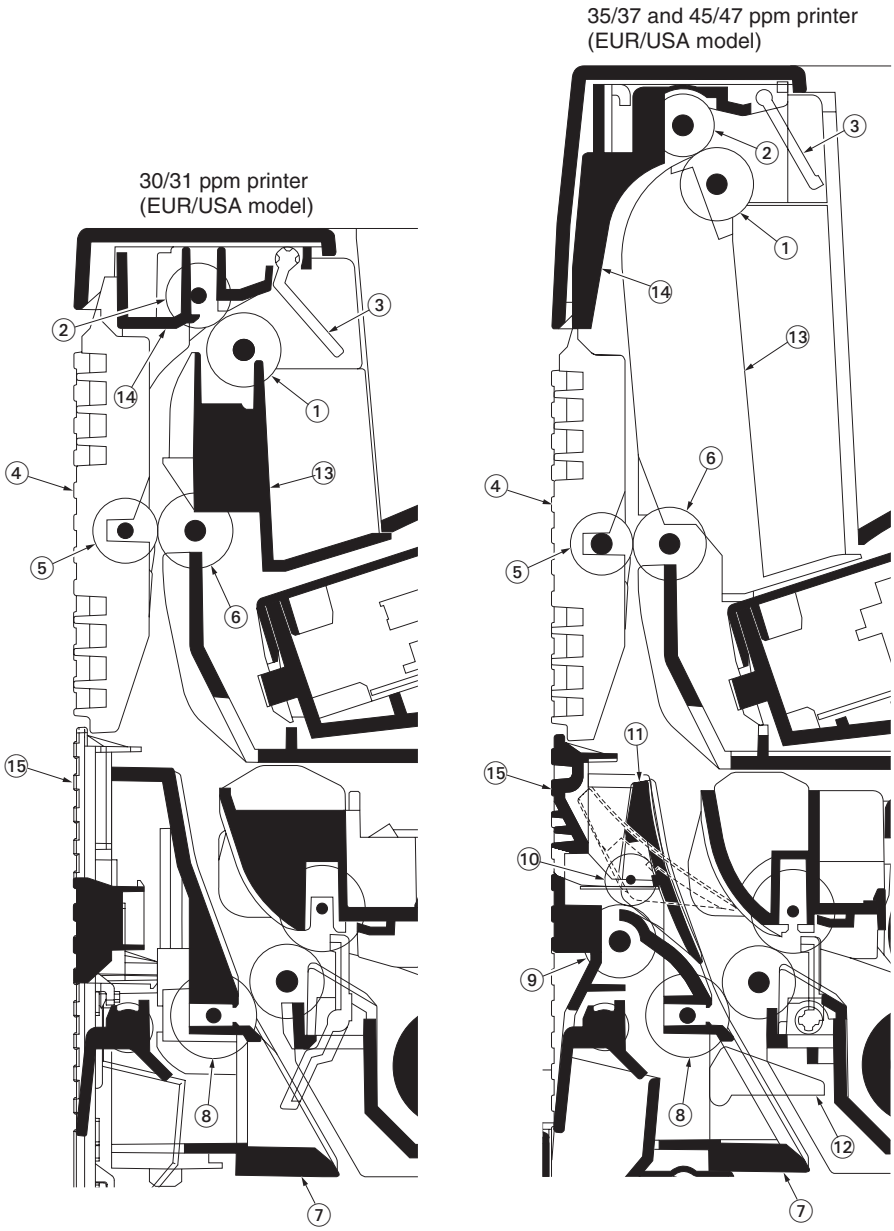

Figure 2-1-19Paper exit section/rear unit

(1) Face down upper roller
(2) Exit FD pulley
(3) Face down tray paper full sensor
(4) FD cover
(5) Feed FD pulley
(6) Face down lower roller
(7) DU guide
(8) Feed DU pulley
(9) Face up roller
(10) Exit FU pulley
(11) Face up guide
(12) Duplex sensor (Actuator)
(13) Vertical guide
(14) Paper exit guide
(15) Rear cover

TONER
www.tonerplus.com.ua

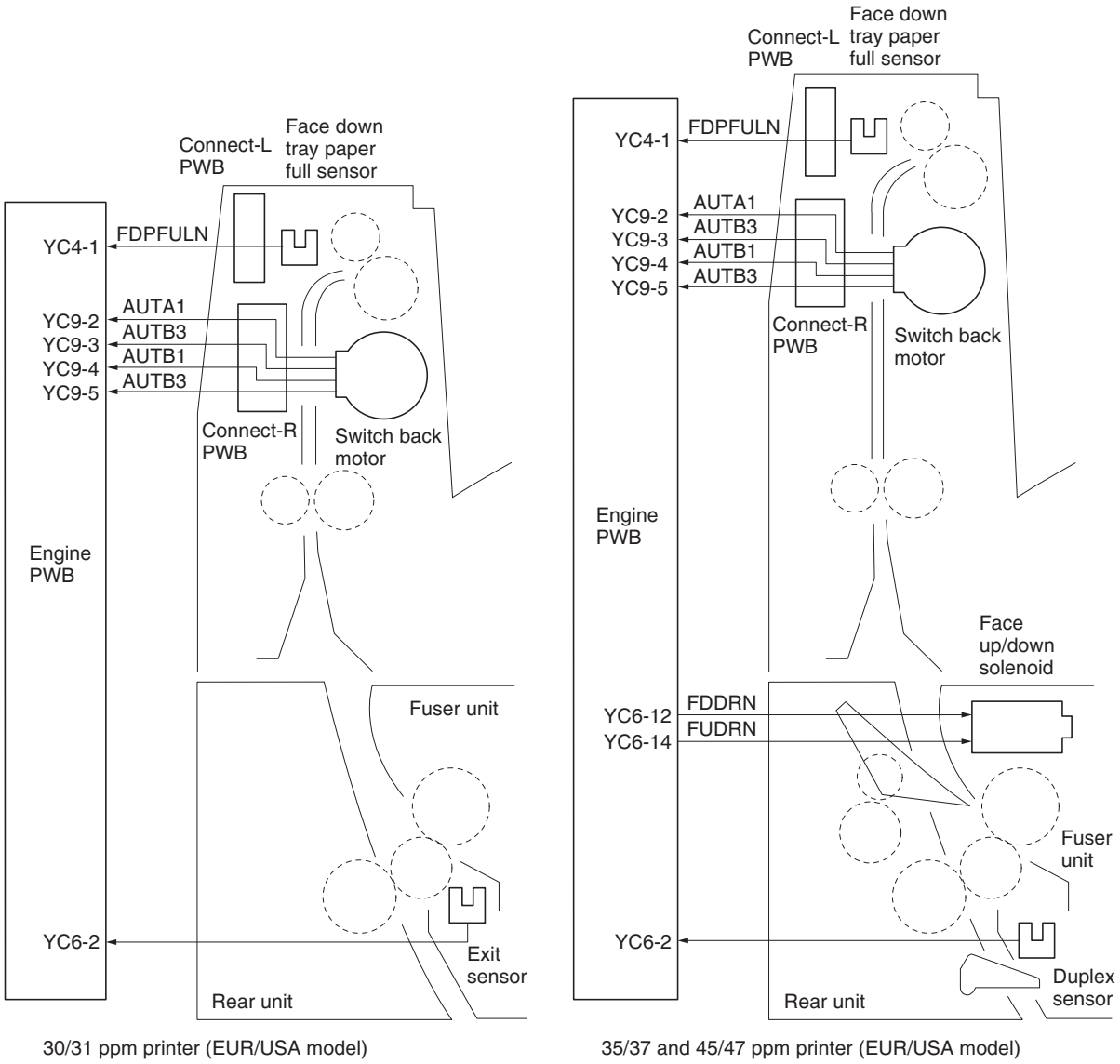

Figure 2-1-20Paper exit section/rear unit block diagram

TONER
www.tonerplus.com.ua

2-1-9 Duplex conveying section

(1) Duplex conveying section

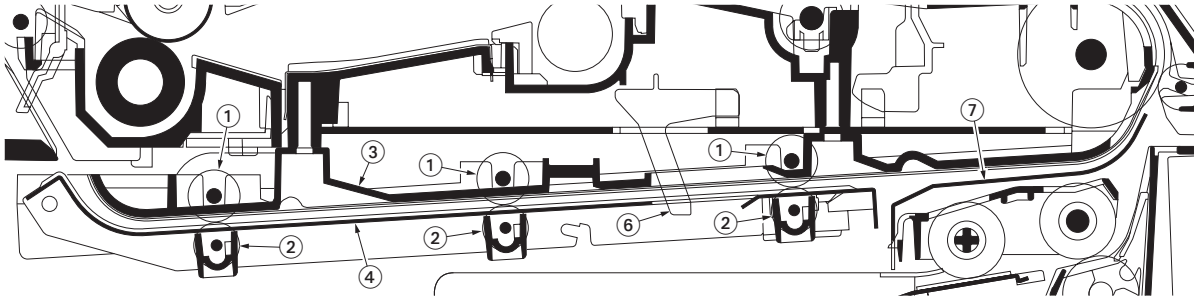

Figure 2-1-21Duplex conveying section

(1) DU roller
(2) DU feed pulley
(3) DU base
(4) DU lower guide
(5) DU roller
(6) Duplex jam sensor (actuator)
(7) Feed upper guide

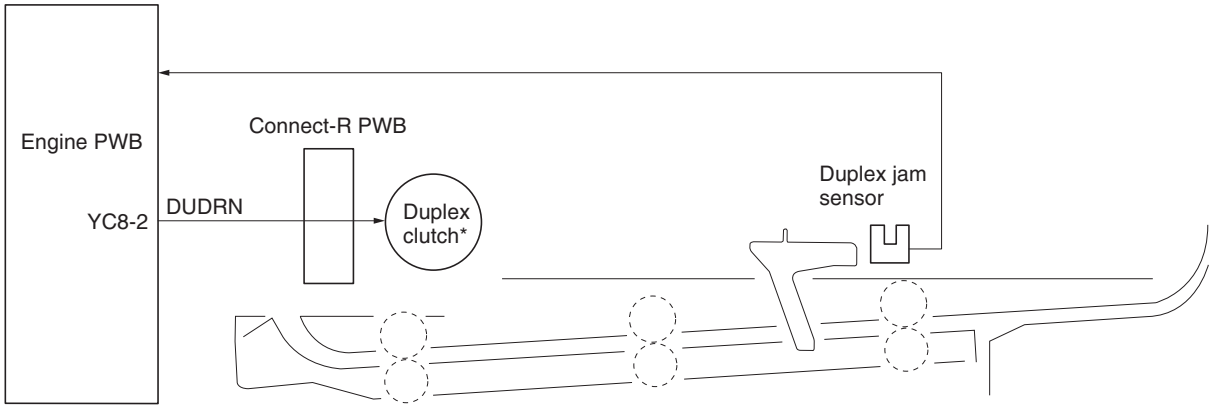

*: 35/37 and 45/47 ppm printer (EUR/USA model) only.

Figure 2-1-22Duplex conveying section block diagram

TONER
www.tonerplus.com.ua

2-2-1 Electrical parts layout

(1) Electrical parts layout

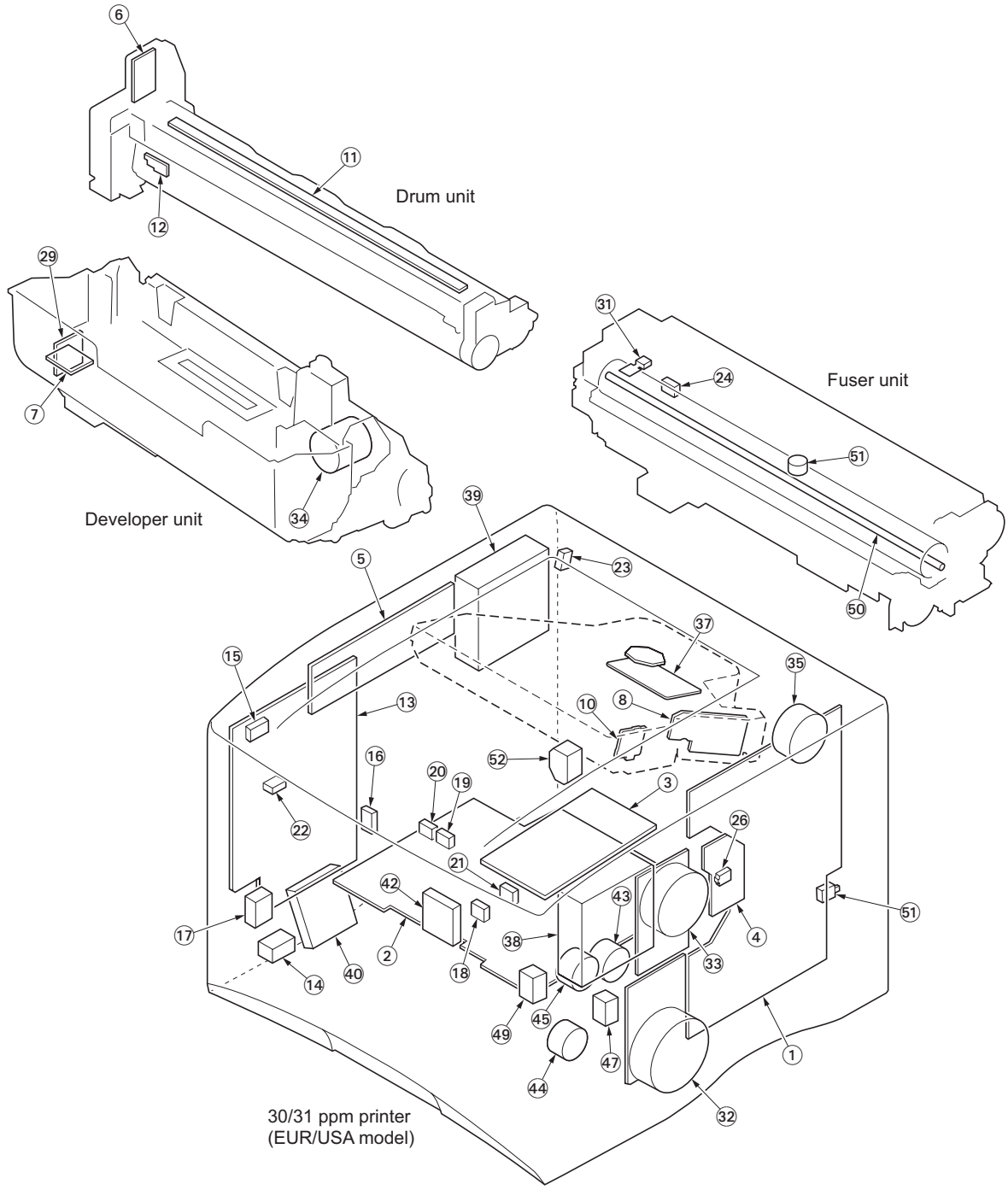

Figure 2-2-1 Electrical parts layout (30/31 ppm printer [EUR/USA model])

TONER
www.tonerplus.com.ua

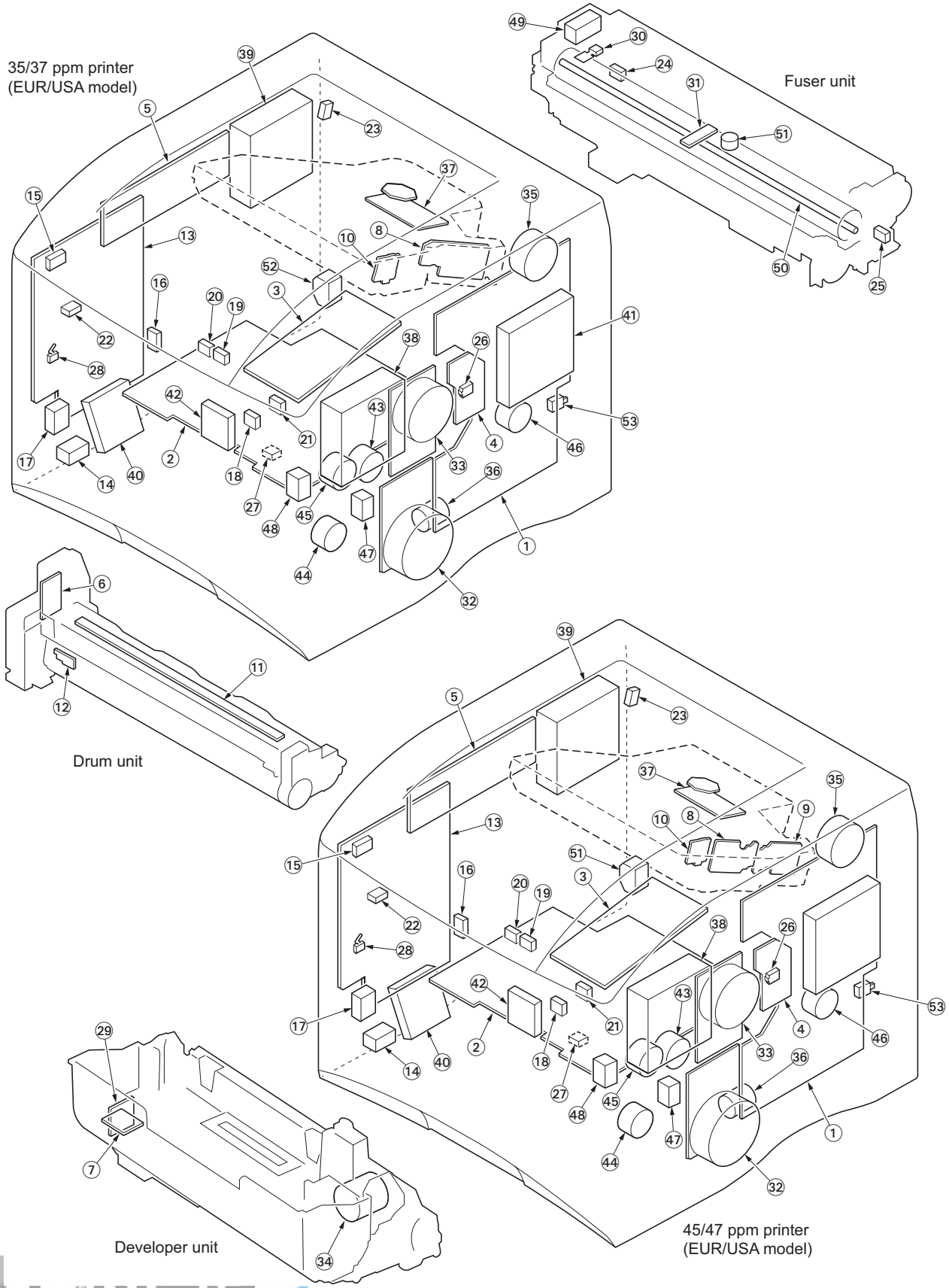

Figure 2-2-2Electrical parts layout (35/37 and 45/47 ppm printer [EUR/USA model])

TONER
www.tonerplus.com.ua

1. Main PWB ..... Controls the software such as the print data processing and provides the interface with computers.
2. Engine PWB ..... Controls printer hardware such as high voltage/bias output control, paper conveying system control, and fuser temperature control, etc.
3. Operation panel PWB ..... Indicates the LCD message display and LED indicators. Controls key inputs.
4. Connect-R PWB ..... Interconnects the engine PWB and the electrical parts.
5. Connect-L PWB ..... Interconnects the engine PWB and the electrical parts.
6. Drum PWB ..... Relays wirings from electrical components on the drum unit. Drum individual information in EEPROM storage.
7. Developer PWB ..... Relays wirings from electrical components on the developer unit.
8. APC PWB 1 ..... Generates and controls the laser beam.
9. APC PWB 2*1 ..... Generates and controls the laser beam.
10. PD PWB ..... Controls horizontal synchronizing timing of laser beam.
11. Eraser lamp PWB ..... Eliminates the residual electrostatic charge on the drum.
12. Waste toner sensor PWB ..... Detects the waste toner box being full.
13. Power source unit ..... Generates 24 V DC and 5 V DC power source. Controls the fuser heater lamp.
14. Power switch ..... Turns ON/OFF the AC power source.
15. Interlock switch 1 ..... Shuts off 24 V DC power line when the top cover is opened.
16. Interlock switch 2 ..... Shuts off 24 V DC power line when the left side cover is opened.
17. Cassette size switch ..... Detects the paper size dial setting of the paper setting dial.
18. Registration sensor ..... Detects the timing of primary feeding.
19. Paper gauge sensor 1 ..... Detects the paper remaining amount level.
20. Paper gauge sensor 2 ..... Detects the paper remaining amount level.
21. Duplex jam sensor ..... Detects paper jam in the duplex conveying section.
22. MP tray paper feed sensor ..... Detects paper on the MP tray.
23. Face down tray paper full sensor ..... Detects whether the face down tray is full.
24. Paper exit sensor ..... Detects paper jam in the fuser unit.
25. Duplex sensor*2 ..... Detects paper jam in the rear unit.
26. Temperature/humidity sensor ..... Detects the ambient temperature and absolute humidity.
27. Lift sensor ..... Detects activation of upper limit of the bottom plate in the paper cassette. (35/45 ppm model only)
28. Envelope feeder detection switch ..... Detects optional envelope feeder.
29. Toner sensor ..... Detects the toner in the toner container.
30. Fuser thermistor S ..... Measures the heat roller temperature.
31. Fuser thermistor M ..... Measures the heat roller temperature.
32. Main motor ..... Drives the paper feed/conveying section and fuser unit.
33. Drum motor ..... Drives the drum unit and developer unit.
34. Toner motor ..... Replenishes the developer with toner.
35. Switchback motor ..... Drives paper exit (switchback) section.
36. Lift motor*2 ..... Operates the bottom plate in the paper cassette.
37. Polygon motor ..... Drives the polygon mirror.
38. Right fan motor ..... Cools the interior of machine.
39. Left fan motor ..... Cools the interior of machine.
40. PSU fan motor ..... Cools the power source unit.
41. CPU fan motor*2 ..... Cools the main PWB (CPU).
42. Feed fan motor ..... Cools the paper feed conveying section and duplex conveying section.
43. Registration clutch ..... Controls the secondary paper feed.
44. Paper feed clutch ..... Controls the paper cassette paper feed.
45. Middle feed clutch ..... Controls the paper conveying at the conveying section.
46. Duplex clutch*2 ..... Controls the paper conveying at the duplex conveying section.
47. Developer solenoid ..... Controls the developer unit drive.
48. MP tray paper feed solenoid ..... Controls the primary paper feed from the MP tray.
49. Face up/down solenoid*2 ..... Switches the output stack between face up and face down.
50. Fuser heater lamp ..... Heats the heat roller.

TONER
www.tonerplus.com.ua

*1: 45/47 ppm printer (EUR/USA model) only, *2: 35/37 and 45/47 ppm printer (EUR/USA model) only

51. Thermal cutout ..... Shuts off the power source to the fuser heater lamp when the heat roller reaches extremely high temperature.
52. AC inlet ..... Connects the AC power source.
53. Fuser unit switch ..... Detects open/close rear unit (fuser unit).

TONER
www.tonerplus.com.ua

2-3-1 Power source unit

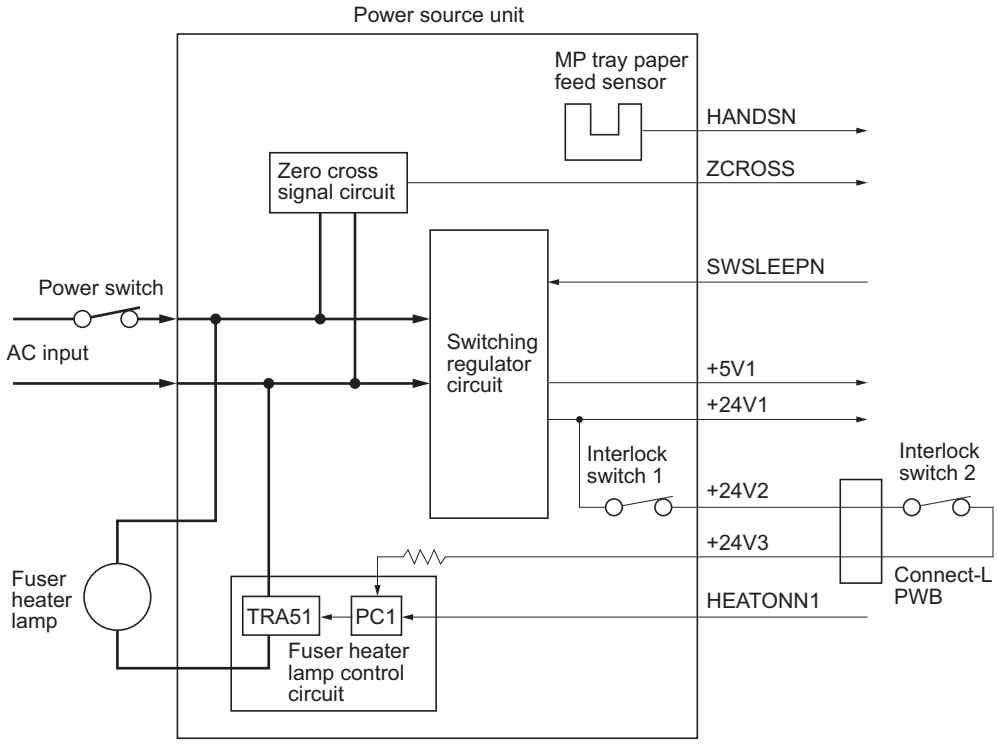

Figure 2-3-1Power source unit block diagram

TONER
www.tonerplus.com.ua

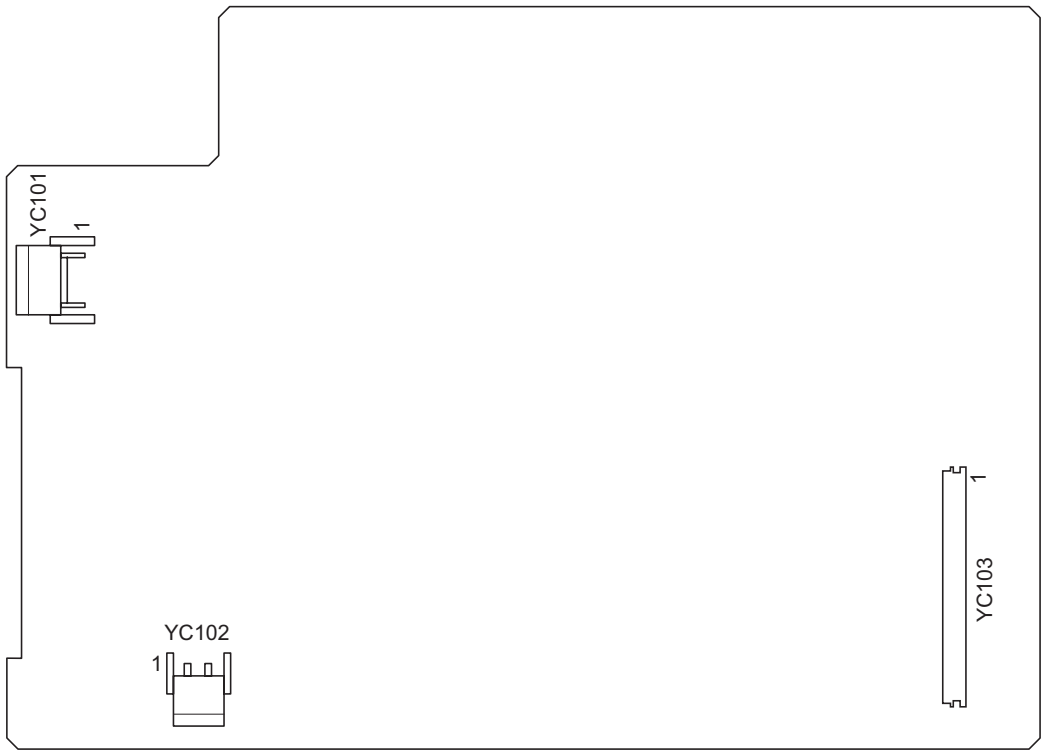

Figure 2-3-2Power source unit silk-screen diagram

Connector	Pin No.	Signal	I/O	Voltage	Description
YC101	1	LIVE	I	120 V AC 220 - 240 V AC	AC power input
Connected to the AC inlet	2	N.C.	-	-	Not used
	3	NEUTRAL	I	120 V AC 220 - 240 V AC	AC power input
YC102	1	COMMON1	O	120 V AC 220 - 240 V AC	Fuser heater lamp
Connected to the heater lamp	2	N.C.	-	-	Not used
	3	LIVE	O	120 V AC 220 - 240 V AC	
YC103	1	+24V2	O	24 V DC	24 V DC power source (via interlock switch 1)
Connected to the con-nect-L PWB	2	+24V2	O	24 V DC	24 V DC power source (via interlock switch 1)
	3	GND	-	-	Ground
	4	GND	-	-	Ground
	5	GND	-	-	Ground
	6	GND	-	-	Ground
	7	+24V3	I	24 V DC	24 V DC power input (via interlock switch 1 and 2)
	8	SWSLEEPN	I	0/5 V DC	Sleep mode: On/Off
	9	ZCROSS	O	0/5 V DC (pulse)	Zero cross signal
	10	HEATONN1	I	0/24 V DC	Fuser heater lamp: On/Off
	11	HEATONN2	I		Not used
	12	HANDSN	O	0/5 V DC	MP paper feed sensor: On/Off
	13	N.C.	-	-	Not used
	14	+24V1	I	24 V DC	24 V DC power source
	15	+5V1	O	5 V DC	5 V DC power source
	16	+5V1	O	5 V DC	5 V DC power source
	17	+5V1	O	5 V DC	5 V DC power source

TONER
www.tonerplus.com.ua

2-3-2 Engine PWB

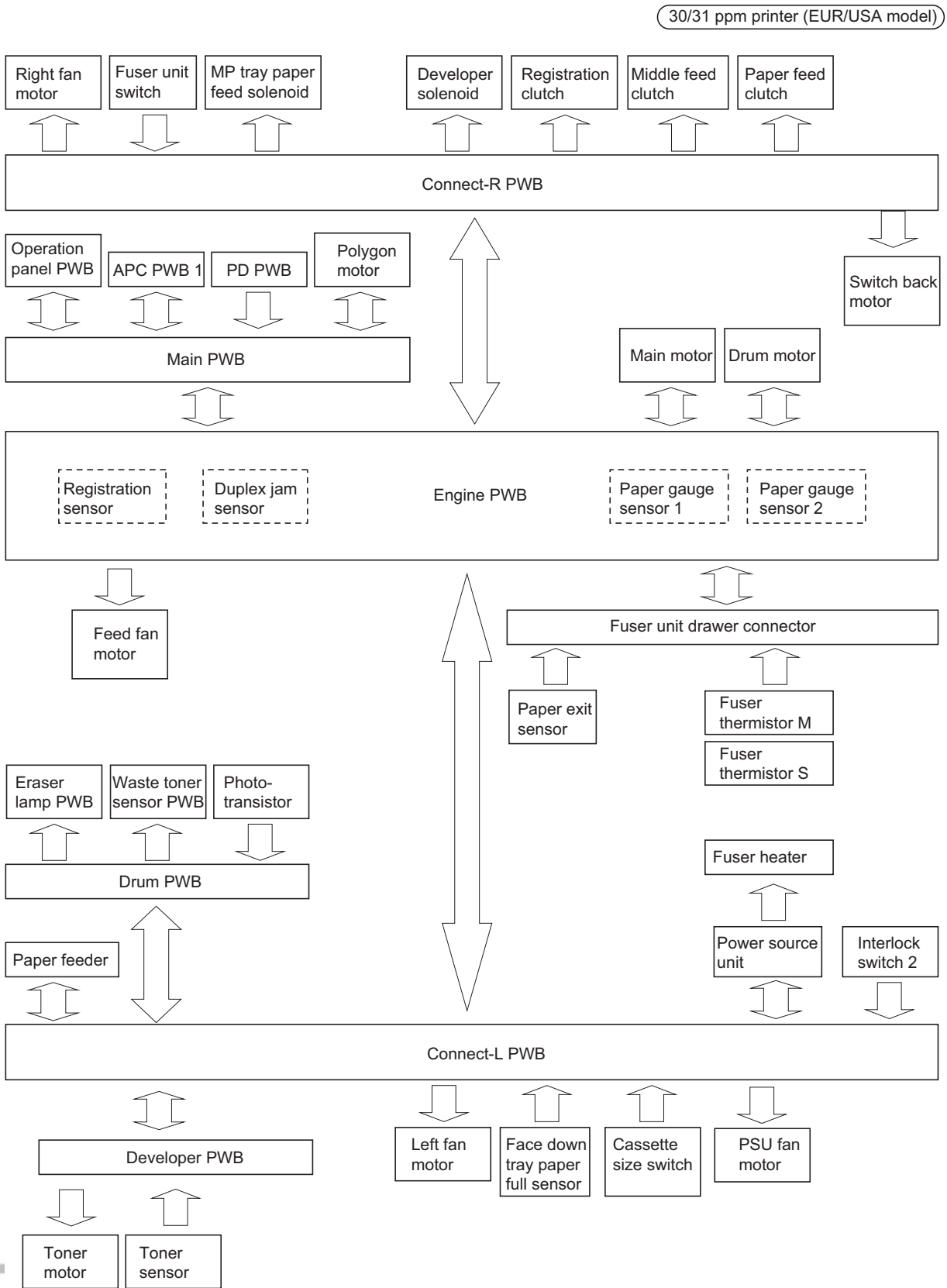

Figure 2-3-3Engine PWB block diagram (30/31 ppm printer [EUR/USA model])

TONER
www.tonerplus.com.ua

35/37 and 45/47 ppm printer (EUR/USA model)

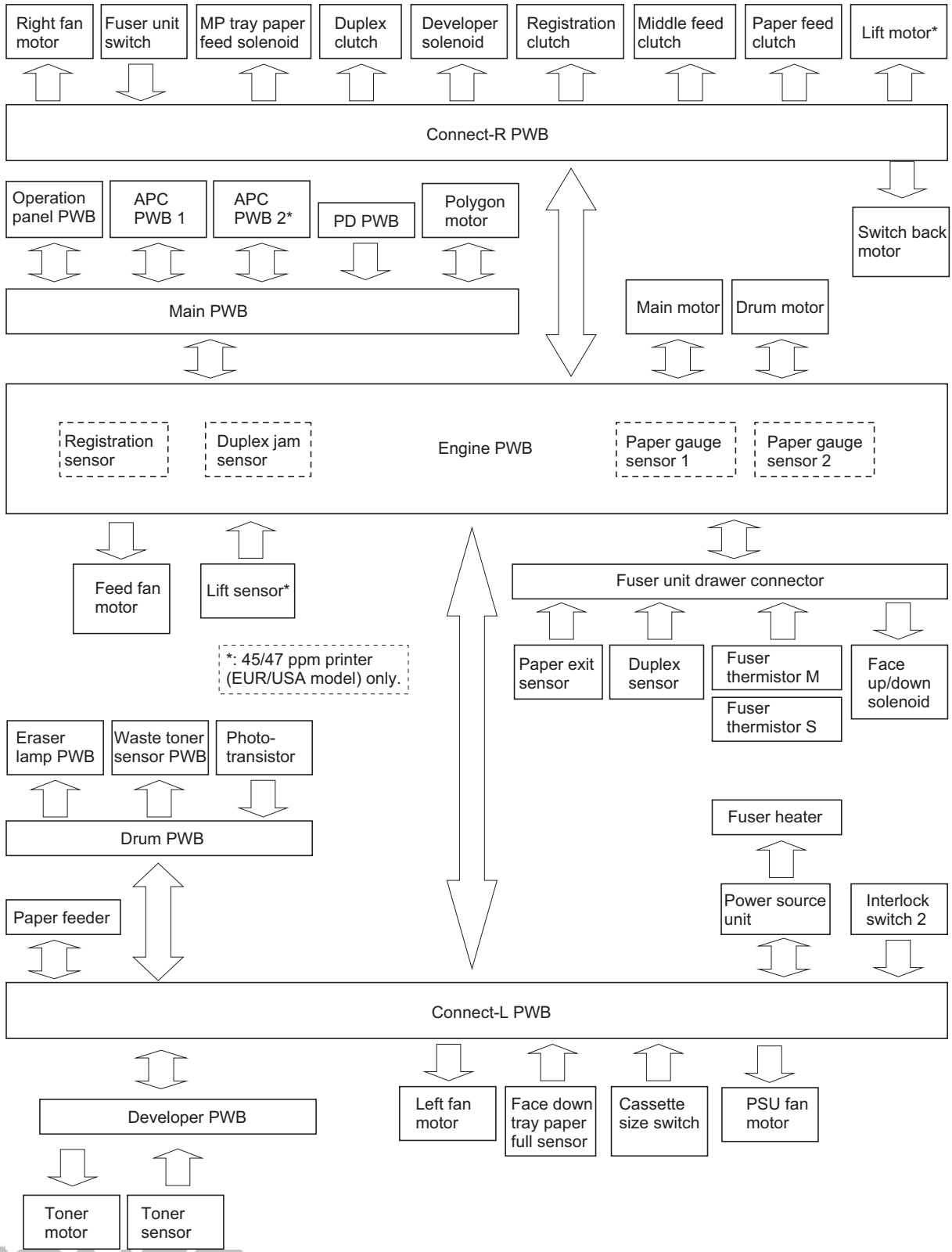

Figure 2-3-4Engine PWB block diagram (35/37 and 45/47 ppm printer [EUR/USA model])

TONER
www.tonerplus.com.ua

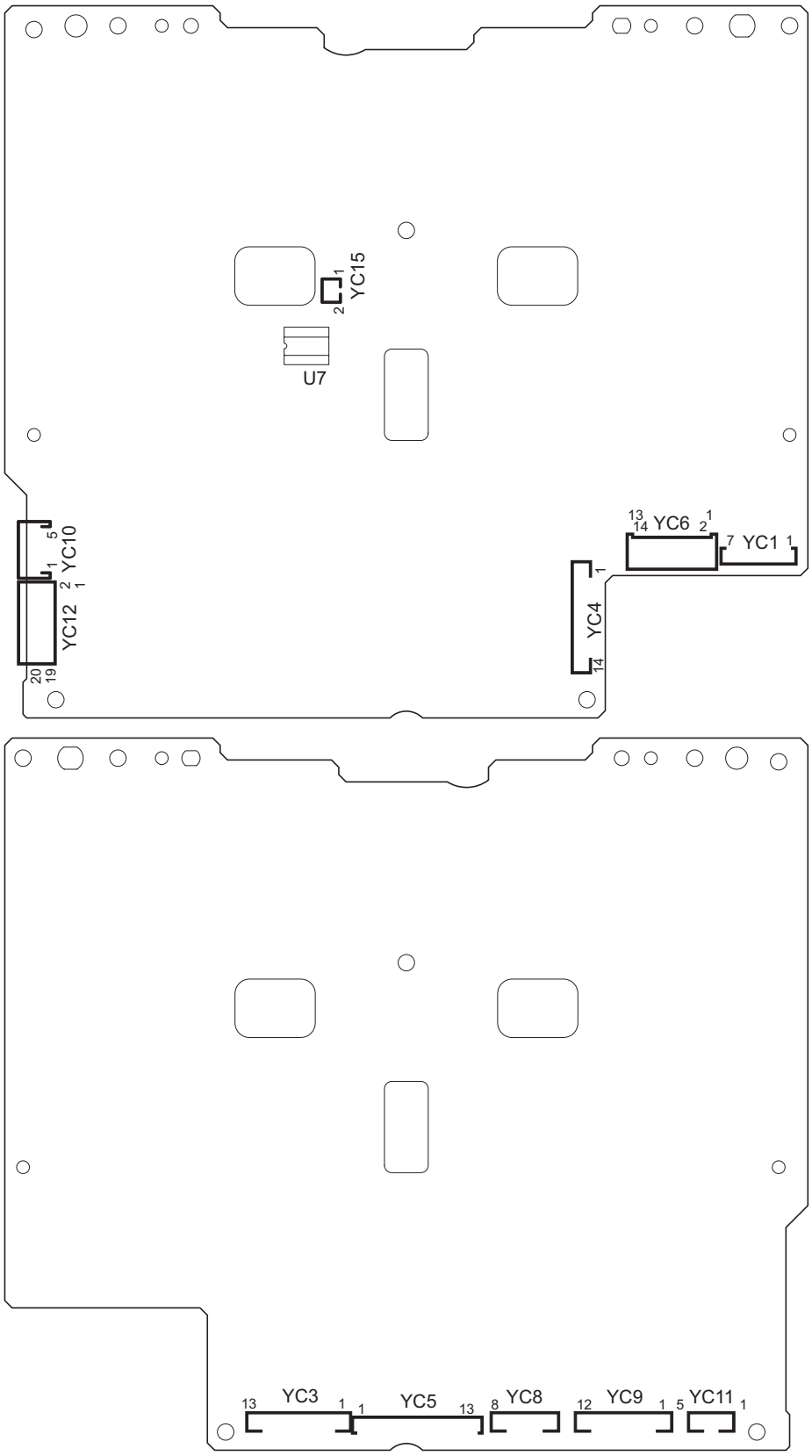

Figure 2-3-5Engine PWB silk-screen diagram

TONER
www.tonerplus.com.ua

Connector	Pin	Signal	I/O	Voltage	Description
YC3	1	SWFAN	O	0/5 V DC	PSU fan motor: On/Off
Connected to the connect-L PWB (YC8)	2	SWSLEEPN	O	0/5 V DC	Sleep mode: On/Off
	3	ZCROSS	I	0/5 V DC (pulse)	Zero cross signal
	4	HEATONN1	O	0/24 V DC	Fuser heater lamp: On/Off
	5	HEATONN2	O	-	Not used
	6	HANDSN	I	0/5 V DC	MP tray paper feed sensor: On/Off
	7	N.C.	-	-	Not used
	8	CAS2	O	5 V DC	5 V DC power source for cassette size switch
	9	CAS1	O	5 V DC	5 V DC power source for cassette size switch
	10	CASET	I	Analog	Cassette size switch detection voltage
	11	CAS0	O	5 V DC	5 V DC power source for cassette size switch
	12	TNMOT	O	0/24 V DC	Toner motor: On/Off
	13	TNLEVEL	I		Toner sensor detection voltage
YC4	1	FDPFULN	I	0/5 V DC	Face down tray paper full sensor: On/Off
Connected to the connect-L PWB (YC6)	2	LFANDRN	O	0/12/24 V DC	Left fan motor: Full speed/Half speed/Off
	3	+24V2	I	24 V DC	Top cover open/close detection signal: Close/Open
	4	EECLK	O	0/5 V DC (pulse)	Drum PWB EEPROM clock signal
	5	EEDIO	I/O	0/5 V DC (pulse)	Drum PWB EEPROM data input/output signal
	6	ERASER	O	0/24 V DC	Eraser lamp: On/Off
	7	WTNLEDN	O	0/5 V DC (pulse)	Waste toner sensor (light emission) control signal
	8	WTNFULN	I	0/5 V DC	Waste toner sensor: On/Off
	9	OPSCLK	O	0/5 V DC (pulse)	Paper feeder serial communication clock signal
	10	OPRDYN	I	0/5 V DC	Paper feeder READY signal
	11	OPSEL0	O	0/5 V DC	Paper feeder selection signal (0)
	12	OPSEL1	O	0/5 V DC	Paper feeder selection signal (1)
	13	OPSEL2	O	0/5 V DC	Paper feeder selection signal (2)
	14	OPSDI	I	0/5 V DC (pulse)	Paper feeder serial communication data input signal
YC5	1	OPSDO	O	0/5 V DC (pulse)	Paper feeder serial communication data output signal
Connected to the connect-L PWB (YC7)	2	+24V3	I	24 V DC	24 V DC power source (via interlock switch 1 and 2)
	3	+24V3	I	24 V DC	24 V DC power source (via interlock switch 1 and 2)
	4	GND	-	-	Ground
	5	GND	-	-	Ground
	6	GND	-	-	Ground
	7	GND	-	-	Ground
	8	GND	-	-	Ground
	9	+24V1	I	24 V DC	24 V DC power source
	10	+5V1	I	5 V DC	5 V DC power source
	11	+5V1	I	5 V DC	5 V DC power source
	12	+5V1	I	5 V DC	5 V DC power source
	13	+5V2	I	5 V DC	5 V DC power source
YC6	1	N.C.	-	-	Not used
Connected to the fuser unit	2	EXITPAP	I	0/5 V DC	Paper exit sensor: On/Off
	3	+5V2	O	5 V DC	5 V DC power source
	4	DUPAP	I	0/5 V DC	Duplex sensor*1: On/Off
	5	+5V2	O	5 V DC	5 V DC power source
	6	FUSIFE	I	0/5 V DC	Fuser unit installation detection: Installed/Not installed
	7	GND	-	-	Ground
	8	+5V1	O	5 V DC	5 V DC power source
	9	THERM1	I	Analog	Fuser thermistor M*2/S*1 detection voltage
	10	+5V1	O	5 V DC	5 V DC power source
	11	THERM2	I	Analog	Fuser thermistor M*1 detection voltage
	12	FDDRN	O	0/24 V DC	Face up/down solenoid*1: On/Off
	13	+24V3	O	24 V DC	24 V DC power source
	14	FUDRN	O	0/24 V DC	Face up/down solenoid*1: On/Off

*1: 35/37 and 45/47 ppm printer (EUR/USA model) only, *2: 30/31 ppm printer (EUR/USA model) only

TONER www.tonerplus.com

Connector	Pin	Signal	I/O	Voltage	Description
YC7	1	GND	-	-	Ground
Connected to the lift limit sensor	2	LIFTSEN	I	0/5 V DC	Lift sensor*1: On/Off
	3	+5V2	O	5 V DC	5 V DC power source
YC8	1	LMOTON	O	0/24 V DC	Lift motor*1: On/Off
Connected to the connect-R PWB (YC2)	2	DUDRN	O	0/24 V DC	Duplex clutch*1: On/Off
	3	DLPDRN	O	0/24 V DC	Developer solenoid: On/Off
	4	MIDDRN	O	0/24 V DC	Middle feed clutch: On/Off
	5	+24V3	O	24 V DC	24 V DC power source
	6	+24V3	O	24 V DC	24 V DC power source
	7	REGDRN	O	0/24 V DC	Registration clutch: On/Off
	8	FEEDDRN	O	0/24 V DC	Paper feed clutch: On/Off
YC9	1	GND	-	-	Ground
Connected to the connect-R PWB (YC1)	2	OUTA1	O	0/24 V DC (pulse)	Switchback motor drive pulse
	3	OUTA3	O	0/24 V DC (pulse)	Switchback motor drive pulse
	4	OUTB1	O	0/24 V DC (pulse)	Switchback motor drive pulse
	5	OUTB3	O	0/24 V DC (pulse)	Switchback motor drive pulse
	6	MPFDRN	O	0/24 V DC	MP tray paper feed solenoid: On/Off
	7	+24V1	O	24 V DC	24 V DC power source
	8	RFANDRN	O	0/12/24 V DC	Right fan motor: Full speed/Half speed/Off
	9	AIRTEMP	I	Analog	Temperature/humidity detection sensor detection voltage (temperature)
	10	+5V1	O	5 V DC	5 V DC power source
	11	WETCLK1	O	0/5 V DC (pulse)	Temperature/humidity detection sensor clock signal
	12	WETCLK2	O I	0/5 V DC (pulse) Analog	Temperature/humidity detection sensor clock signal and detection voltage (humidity)
YC10	1	+24V4	O	24 V DC	24 V DC power source
Connected to the main motor	2	GND	-	-	Ground
	3	MMOTONN	O	0/5 V DC	Main motor: On/Off
	4	MMOTRDYN	I	0/5 V DC	Main motor ready signal
	5	MMOTCLK	O	0/5 V DC (pulse)	Main motor clock signal
YC11	1	+24V4	O	24 V DC	24 V DC power source
Connected to the drum motor	2	GND	-	-	Ground
	3	DMOTRDYN	I	0/5 V DC	Drum motor ready signal
	4	DMOTCLK	O	0/5 V DC (pulse)	Drum motor clock signal
	5	DMOTONN	O	0/5 V DC	Drum motor: On/Off
YC12	1	POLRDYN	I	0/5 V DC	Polygon motor ready signal
Connected to the main PWB	2	POLONN	O	0/5 V DC	Polygon motor: On/Off
	3	OUTPEN	O	0/5 V DC	Print data output enable signal
	4	PDMASKN	O	0/5 V DC	PD mask control signal
	5	SBSY	O	0/5 V DC	Engine busy signal
	6	SDIR	O	0/5 V DC	Communication direction change signal
	7	EGIRN	O	0/5 V DC	Engine interrupt signal
	8	EGSI	I	0/5 V DC (pulse)	Main PWB serial communication data signal input
	9	EGSO	O	0/5 V DC (pulse)	Main PWB serial communication data signal output
	10	SCLKN	O	0/5 V DC (pulse)	Main PWB serial communication clock signal
	11	RESETN	O	0/5 V DC	Reset signal
	12	+24V5	O	24 V DC	24 V DC power source
	13	+5V1	O	5 V DC	5 V DC power source
	14	+5V1	O	5 V DC	5 V DC power source
	15	GND	-	-	Ground
	16	+5V1	O	5 V DC	5 V DC power source
	17	GND	-	-	Ground
	18	GND	-	-	Ground
	19	GND	-	-	Ground
	20	+24V4	O	24 V DC	24 V DC power source

*1: 35/37 and 45/47 ppm printer (EUR/USA model) only, *2: 30/31 ppm printer (EUR/USA model) only

TONER

Connector	Pin	Signal	I/O	Voltage	Description
YC15	1	+5V1	O	5 V DC	5 V DC power source
Connected to the feed fan motor	2	FANDRN	O	0/2.5/5 V DC	Feed fan motor: Full speed/Half speed/Off

TONER
www.tonerplus.com.ua

2-3-3 Main PWB

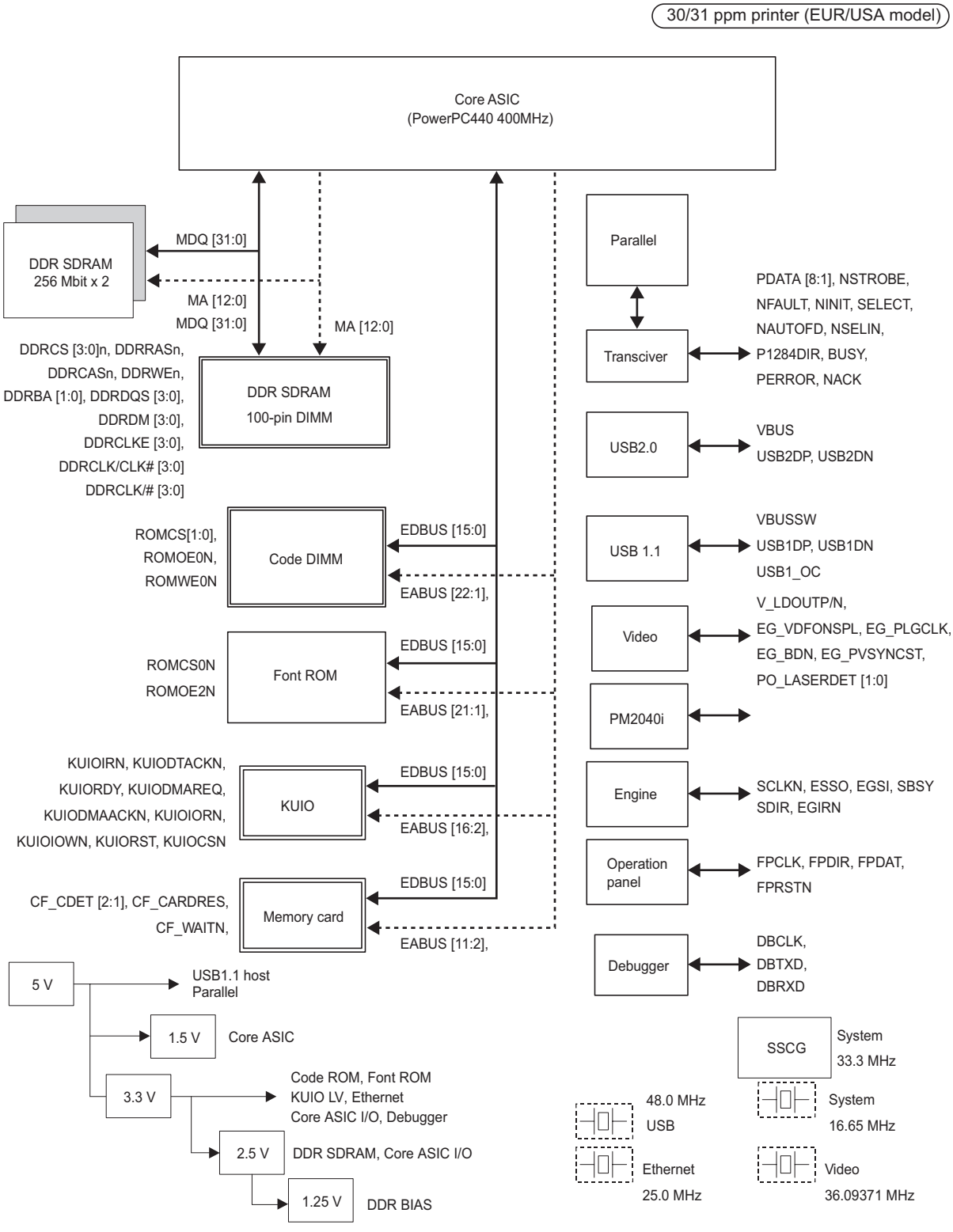

Figure 2-3-6Main PWB block diagram (30/31 ppm printer [EUR/USA model])

TONER
www.tonerplus.com.ua

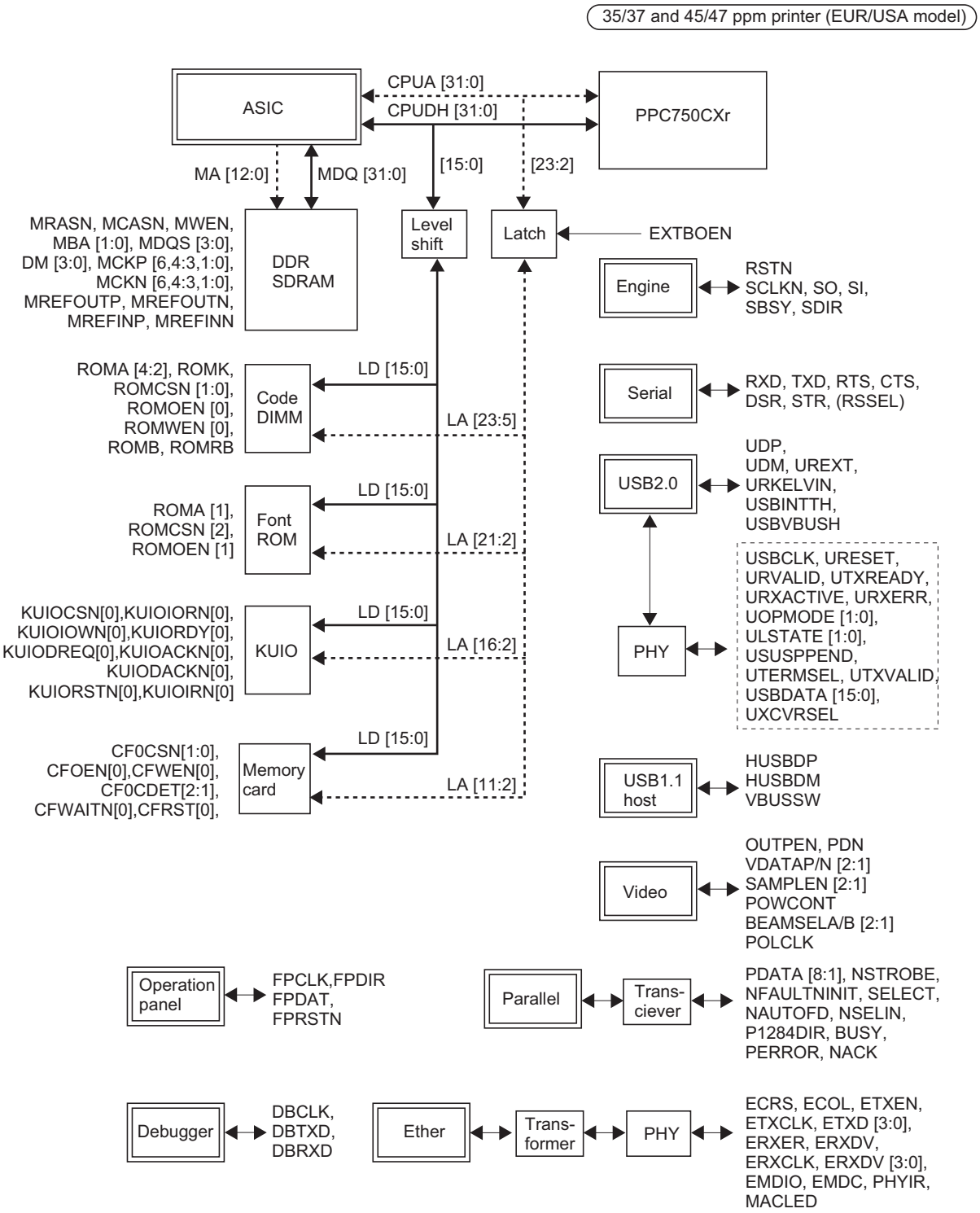

Figure 2-3-7Main PWB block diagram (35/37 and 45/47 ppm printer [EUR/USA model])

TONER
www.tonerplus.com.ua

(1) Wiring diagram (30/31 ppm printer [EUR/USA model])

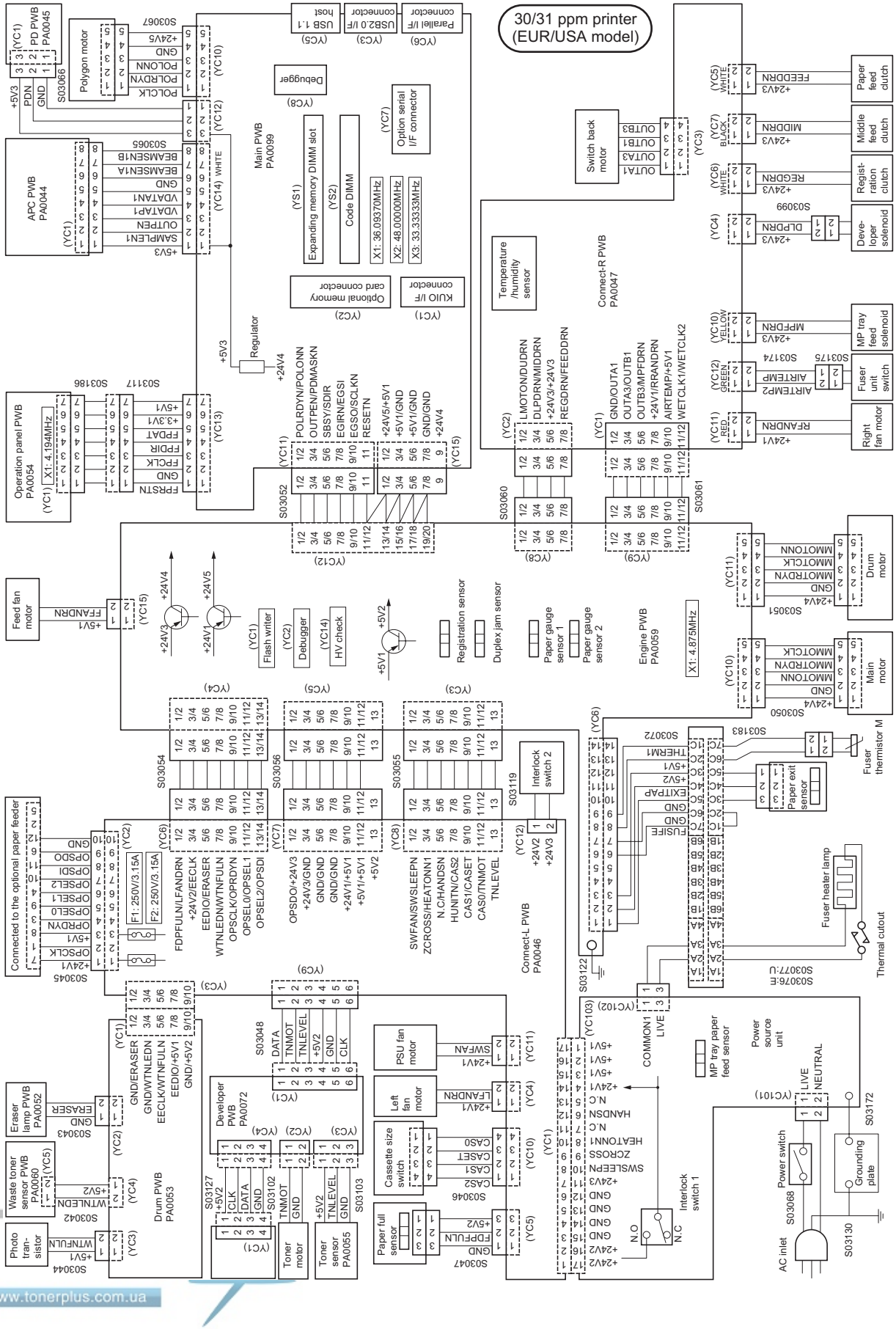

www.tonerplus.com.ua

(2) Wiring diagram (35/37 ppm printer [EUR/USA model])

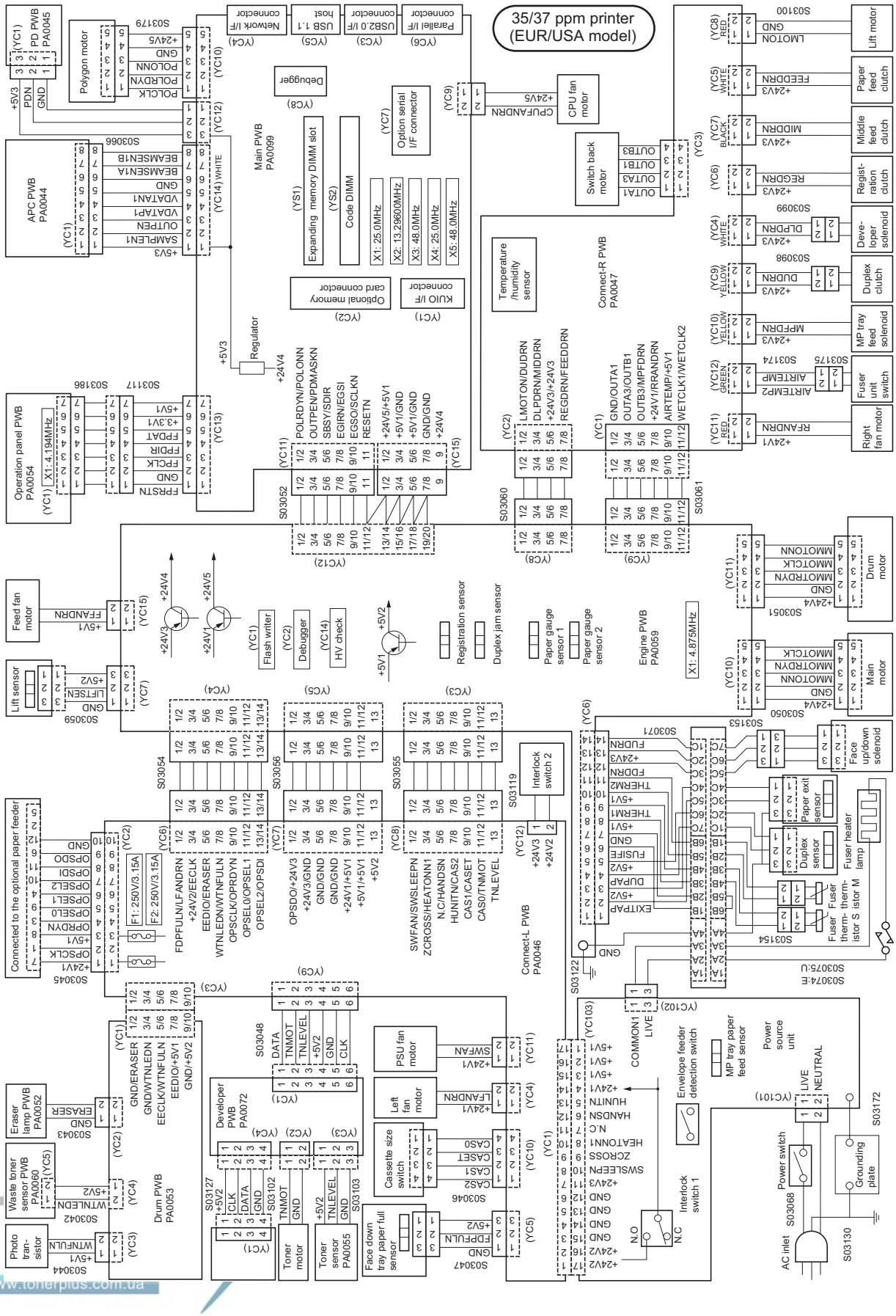

www.toneriplus.com.ua

(3) Wiring diagram (45/47 ppm printer [EUR/USA model])

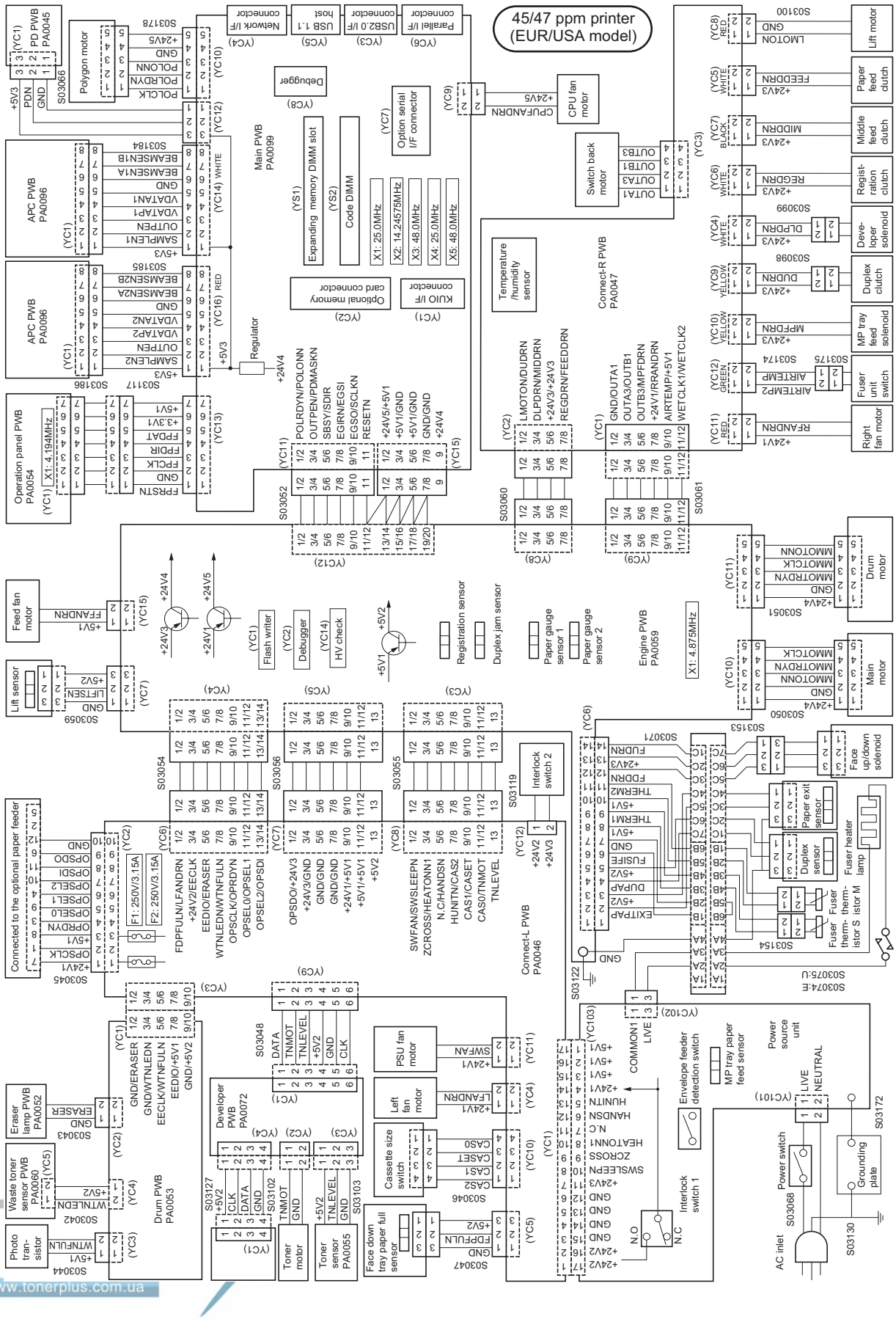

www.tonerplus.com.ua

(4) Repetitive defects gauge

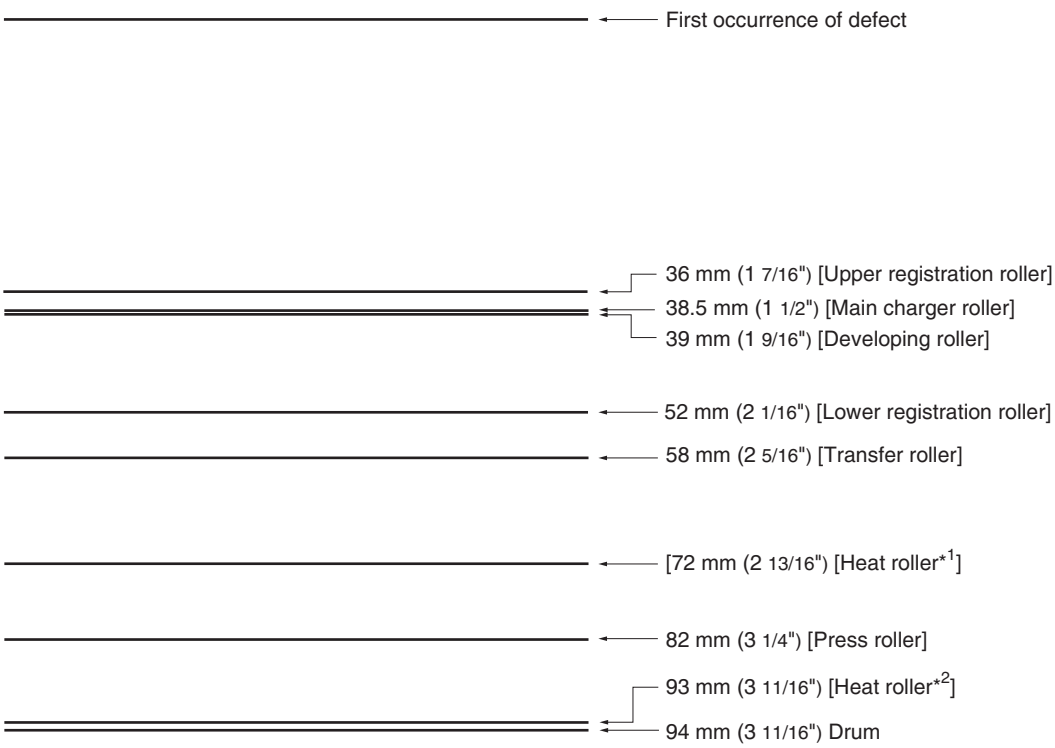

*1: 30/31 ppm printer (EUR/USA model)
*2: 35/47 and 45/47 ppm printer (EUR/USA model)

TONER
www.tonerplus.com.ua

KYOCERA MITA EUROPE B.V.

Hoeksteen 40, 2132 MS Hoofddorp,
The Netherlands
Phone: +31.20.654.0000
Home page: http://www.kyoceramita-europe.com
Email: info@kyoceramita-europe.com

KYOCERA MITA NEDERLAND B.V.
Beechavenue 25, 1119RA Schiphol-Rijk
The Netherlands
Phone: +31.20.58.77.200

KYOCERA MITA (UK) LTD
8 Beacontree Plaza
Gillette Way Reading Berks RG2 0BS,
U.K.
Phone: +44.1189.311.500

KYOCERA MITA ITALIA S.p.A.
Via G. Verdi, 89 / 91, 20063 Cernusco s/N
Milano, Italy
Phone: +39.02.92179.1

S.A. KYOCERA MITA BELGIUM N.V.
Hermesstraat 8A, 1930 Zaventem,
Belgium
Phone: +32.2.720.9270

KYOCERA MITA FRANCE S.A.
Parc Les Algorithmes Saint Aubin
91194 GIF-SUR-YVETTE,
France
Phone: +33.1.6985.2600

KYOCERA MITA ESPAÑA S.A.
Edificio Kyocera, Avda de Manacor No. 2,
28290 Las Matas (Madrid),
Spain
Phone: +34.91.631.8392

KYOCERA MITA FINLAND OY
Kirvesmiehenkatu 4, 00880 Helsinki,
Finland
Phone: +358.9.4780.5200

KYOCERA MITA (SCHWEIZ)
Hohlstrasse 614, 8048 Zürich
Switzerland
Phone: +41.1.908.4949

KYOCERA MITA DEUTSCHLAND GMBH
Mollsfeld 12, 40670 Meerbusch,
Germany
Phone: +49.2159.918.0

KYOCERA MITA GMBH AUSTRIA
Eduard-Kittenberger-Gasse 95,
1230 Wien,
Austria
Phone: +43.1.86338.210

KYOCERA MITA SVENSKA AB
Vretenvägen 2, 6tr, 17 154 Solna,
Sweden
Phone: +46.8.546.55000

KYOCERA MITA NORGE
Postboks 150 Oppsal, NO 0619 Oslo
Olaf Helsetsvei 6, NO 0694 Oslo,
Norway
Phone: +47.22.62.73.00

KYOCERA MITA DANMARK A/S
Ejby Industrivej 1, DK-2600 Glostrup,
Denmark
Phone: +45.5687.1100

KYOCERA MITA PORTUGAL LDA.
Rua do Centro Cultural, 41 (Alvalade) 1700-106 Lisbon,
Portugal
Phone: +351.21.842.9100

KYOCERA MITA SOUTH AFRICA (PTY) LTD.
527 Kyalami Boulevard,
Kyalami Business Park Midrand,
South Africa
Phone: +27.(0)11.540.2600

KYOCERA MITA AMERICA, INC.

Headquarters:
225 Sand Road,
Fairfield, New Jersey 07004-0008,
U.S.A.
Phone: (973) 808-8444

KYOCERA MITA AUSTRALIA PTY. LTD.
Level 3, 6-10 Talavera Road, North Ryde,
N.S.W. 2113 Australia
Phone: (02) 9888-9999

KYOCERA MITA NEW ZEALAND LTD.
1-3 Parkhead Place, Albany
P.O. Box 302 125 NHPC, Auckland,
New Zealand
Phone: (09) 415-4517

KYOCERA MITA (THAILAND) CORP., LTD.
9/209 Ratchada-Prachachem Road,
Bang Sue, Bangkok 10800, Thailand
Phone: (02) 586-0320

KYOCERA MITA SINGAPORE PTE LTD.
121 Genting Lane, 3rd Level,
Singapore 349572
Phone: 67418733

KYOCERA MITA HONG KONG LIMITED
11/F., Mita Centre,
552-566, Castle Peak Road,
Tsuen Wan, New Territories,
Hong Kong
Phone: 24297422

KYOCERA MITA TAIWAN Corporation.
7F-1~2, No.41, Lane 221, Gangchi Rd.
Neihu District, Taipei, Taiwan, 114. R.O.C.
Phone: (02) 87511560

KYOCERA MITA Corporation

2-28, 1-chome, Tamatsukuri, Chuo-ku
Osaka 540-8585, Japan
Phone: (06) 6764-3555
http://www.kyoceramita.com

©2007 KYOCERA MITA Corporation
KYOCERA is a trademark of Kyocera Corporation

Printed in Holland

KYOCERA MITA AMERICA, INC.

Headquarters:
225 Sand Road,
Fairfield, New Jersey 07004-0008
TEL : (973) 808-8444
FAX : (973) 882-6000

New York Branch:
1410 Broadway 23rd floor
New York, NY 10018
TEL : (917) 286-5400
FAX : (917) 286-5402

Northeastern Region:
225 Sand Road,
Fairfield, New Jersey 07004-0008
TEL : (973) 808-8444
FAX : (973) 882-4401

Midwestern Region:
201 Hansen Court Suite 119
Wood Dale, Illinois 60191
TEL : (630) 238-9982
FAX : (630) 238-9487

Western Region:
14101 Alton Parkway,
Irvine, California 92618-7006
TEL : (949) 457-9000
FAX : (949) 457-9119

Southeastern Region:
1500 Oakbrook Drive,
Norcross, Georgia 30093
TEL : (770) 729-9786
FAX : (770) 729-9873

Southwestern Region:
2825 West Story Road,
Irving, Texas 75038-5299
TEL : (972) 550-8987
FAX : (972) 252-9786

National Operation Center & National Training Center:
2825 West Story Road,
Irving, Texas 75038-5299
TEL : (972) 659-0055
FAX : (972) 570-5816

Latin America Division:
8240 N.W. 52nd. Terrace Dawson Building,
Suite 108 Miami, Florida 33166
TEL : (305) 421-6640
FAX : (305) 421-6666

KYOCERA MITA CANADA, LTD.

6120 Kestrel Road, Mississauga,
Ontario L5T 1S8, Canada
TEL : (905) 670-4425
FAX : (905) 670-8116

KYOCERA MITA MEXICO, S.A. DE C.V.

Av. 16 de Septiembre #407
Col. Santa Inés,
Azcapotzalco México,
D.F. 02130, México
TEL : (55) 5383-2741
FAX : (55) 5383-7804

©2007 KYOCERA MITA Corporation
http://www.kyoceramita.com
KYOCERA is a trademark of Kyocera Corporation

Printed in U.S.A.