KYOCERA

TASKalfa 205c
TASKalfa 255c
FS-C8020MFP
FS-C8025MFP

SERVICE MANUAL

Published in December 2010
842KZ110
2KZSM060
First Edition

CAUTION

RISK OF EXPLOSION IF BATTERY IS REPLACED BY AN INCORRECT TYPE. DISPOSE OF USED BATTERIES ACCORDING TO THE INSTRUCTIONS.

It may be illegal to dispose of this battery into the municipal waste stream. Check with your local solid waste officials for details in your area for proper disposal.

ATTENTION

IL Y A UN RISQUE D'EXPLOSION SI LA BATTERIE EST REMPLACEE PAR UN MODELE DE TYPE INCORRECT. METTRE AU REBUT LES BATTERIES UTILISEES SELON LES INSTRUCTIONS DONNEES.

Il peut être illégal de jeter les batteries dans des eaux d'égout municipales. Vérifiez avec les fonctionnaires municipaux de votre région pour les détails concernant des déchets solides et une mise au rebut appropriée.

Revision history

Revision	Date	Replaced pages	Remarks

This page is intentionally left blank.

Safety precautions

This booklet provides safety warnings and precautions for our service personnel to ensure the safety of their customers, their machines as well as themselves during maintenance activities. Service personnel are advised to read this booklet carefully to familiarize themselves with the warnings and precautions described here before engaging in maintenance activities.

Safety warnings and precautions

Various symbols are used to protect our service personnel and customers from physical danger and to prevent damage to their property. These symbols are described below:

⚠**DANGER:** High risk of serious bodily injury or death may result from insufficient attention to or incorrect compliance with warning messages using this symbol.

⚠**WARNING:** Serious bodily injury or death may result from insufficient attention to or incorrect compliance with warning messages using this symbol.

⚠**CAUTION:** Bodily injury or damage to property may result from insufficient attention to or incorrect compliance with warning messages using this symbol.

Symbols

The triangle (△) symbol indicates a warning including danger and caution. The specific point of attention is shown inside the symbol.

 General warning.  Warning of risk of electric shock.

 Warning of high temperature.

⃠ indicates a prohibited action. The specific prohibition is shown inside the symbol.

 General prohibited action.  Disassembly prohibited.

● indicates that action is required. The specific action required is shown inside the symbol.

 General action required.  Remove the power plug from the wall outlet.

 Always ground the copier.

1. Installation Precautions

⚠WARNING

- Do not use a power supply with a voltage other than that specified. Avoid multiple connections to one outlet: they may cause fire or electric shock. When using an extension cable, always check that it is adequate for the rated current. .....
- Connect the ground wire to a suitable grounding point. Not grounding the copier may cause fire or electric shock. Connecting the earth wire to an object not approved for the purpose may cause explosion or electric shock. Never connect the ground cable to any of the following: gas pipes, lightning rods, ground cables for telephone lines and water pipes or faucets not approved by the proper authorities. .....

⚠CAUTION:

- Do not place the copier on an infirm or angled surface: the copier may tip over, causing injury. .....
- Do not install the copier in a humid or dusty place. This may cause fire or electric shock. .....
- Do not install the copier near a radiator, heater, other heat source or near flammable material. This may cause fire. .....
- Allow sufficient space around the copier to allow the ventilation grills to keep the machine as cool as possible. Insufficient ventilation may cause heat buildup and poor copying performance. .....
- Always handle the machine by the correct locations when moving it. .....
- Always use anti-toppling and locking devices on copiers so equipped. Failure to do this may cause the copier to move unexpectedly or topple, leading to injury. .....
- Avoid inhaling toner or developer excessively. Protect the eyes. If toner or developer is accidentally ingested, drink a lot of water to dilute it in the stomach and obtain medical attention immediately. If it gets into the eyes, rinse immediately with copious amounts of water and obtain medical attention. .....
- Advice customers that they must always follow the safety warnings and precautions in the copier's instruction handbook. .....

2. Precautions for Maintenance

WARNING

- Always remove the power plug from the wall outlet before starting machine disassembly. .....
- Always follow the procedures for maintenance described in the service manual and other related brochures. .....
- Under no circumstances attempt to bypass or disable safety features including safety mechanisms and protective circuits. .....
- Always use parts having the correct specifications. .....
- Always use the thermostat or thermal fuse specified in the service manual or other related brochure when replacing them. Using a piece of wire, for example, could lead to fire or other serious accident. .....
- When the service manual or other serious brochure specifies a distance or gap for installation of a part, always use the correct scale and measure carefully. .....
- Always check that the copier is correctly connected to an outlet with a ground connection. .....
- Check that the power cable covering is free of damage. Check that the power plug is dust-free. If it is dirty, clean it to remove the risk of fire or electric shock. .....
- Never attempt to disassemble the optical unit in machines using lasers. Leaking laser light may damage eyesight. .....
- Handle the charger sections with care. They are charged to high potentials and may cause electric shock if handled improperly. .....

CAUTION

- Wear safe clothing. If wearing loose clothing or accessories such as ties, make sure they are safely secured so they will not be caught in rotating sections. .....
- Use utmost caution when working on a powered machine. Keep away from chains and belts. .....
- Handle the fixing section with care to avoid burns as it can be extremely hot. .....
- Check that the fixing unit thermistor, heat and press rollers are clean. Dirt on them can cause abnormally high temperatures. .....

- Do not remove the ozone filter, if any, from the copier except for routine replacement. .....
- Do not pull on the AC power cord or connector wires on high-voltage components when removing them; always hold the plug itself. .....
- Do not route the power cable where it may be stood on or trapped. If necessary, protect it with a cable cover or other appropriate item. .....
- Treat the ends of the wire carefully when installing a new charger wire to avoid electric leaks. .....
- Remove toner completely from electronic components. .....
- Run wire harnesses carefully so that wires will not be trapped or damaged. .....
- After maintenance, always check that all the parts, screws, connectors and wires that were removed, have been refitted correctly. Special attention should be paid to any forgotten connector, trapped wire and missing screws. .....
- Check that all the caution labels that should be present on the machine according to the instruction handbook are clean and not peeling. Replace with new ones if necessary. .....
- Handle greases and solvents with care by following the instructions below: .....
  · Use only a small amount of solvent at a time, being careful not to spill. Wipe spills off completely.
  · Ventilate the room well while using grease or solvents.
  · Allow applied solvents to evaporate completely before refitting the covers or turning the power switch on.
  · Always wash hands afterwards.
- Never dispose of toner or toner bottles in fire. Toner may cause sparks when exposed directly to fire in a furnace, etc. .....
- Should smoke be seen coming from the copier, remove the power plug from the wall outlet immediately. .....

3. Miscellaneous

WARNING

- Never attempt to heat the drum or expose it to any organic solvents such as alcohol, other than the specified refiner; it may generate toxic gas. .....

This page is intentionally left blank.

CONTENTS

1-5 Assembly and disassembly

1-6 Requirements on PWB Replacement

2-1 Mechanical Construction

2-2 Electrical Parts Layout

2-3 Operation of the PWBs

2-4 Appendixes

Installation Guide

1-1-1 Specifications

Machine

Item		Specifications			
		20ppm		25ppm	
Type		Desktop			
Printing method		Electrophotography by semiconductor laser, tandem (4) drum system			
Originals		Sheet, Book, 3-dimensional objects (maximum original size: A3/Ledger)			
Original feed system		Fixed			
Paper weight	Cassette	60 to 256 g/m² (Duplex: 60 to 220 g/m²)			
	MP tray	60 to 256 g/m², 230µm (Cardstock)			
Paper type	Cassette	Plain, Recycled, Preprinted, Bond, Color (Colour), Letterhead, Thick, High quality, Custom 1 to 8 (Duplex: Same as simplex)			
	MP tray	Plain, Vellum, Recycled, Preprinted, Bond, Cardstock, Color (Colour), Letterhead, Thick, Envelope, Coated, High quality, Custom 1 to 8			
Paper size	Cassette	A3, A4, A5, A6, B5, Ledger, Letter, Legal, Statement, Executive, Oficio II, Folio, 16K,Envelope C5, Custom			
	MP tray	A3, A4, A5, A6, B5, ISO B5, B6, Ledger, Letter, Legal, Statement, Executive, Oficio II, Folio, 16K, Envelope #10, Envelope #9, Envelope #6, Envelope Monarch, Envelope DL, Envelope C5, Postcards, Return postcard, Youkei 2, Youkei 4, Custom			
Zoom level		Manual mode : (When using the DP) 25 to 400%, 1% increments (When the DP is not used) 25 to 400%, 1% increments Auto mode : 400%, 200%, 141%, 122%, 115%, 86%, 81%, 70%, 50%, 25%			
Copying speed (Simplex)		Color	B/W	Color	B/W
	A4/Letter	20 sheets/min	20 sheets/min	25 sheets/min	25 sheets/min
	A4R/LetterR	14 sheets/min	14 sheets/min	17 sheets/min	17 sheets/min
	A3/Ledger	8 sheets/min	10 sheets/min	8 sheets/min	13 sheets/min
	B4/Legal	8 sheets/min	10 sheets/min	8 sheets/min	13 sheets/min
	B5	20 sheets/min	20 sheets/min	25 sheets/min	25 sheets/min
	B5R	14 sheets/min	14 sheets/min	17 sheets/min	17 sheets/min
	A5R	10 sheets/min	10 sheets/min	13 sheets/min	13 sheets/min
First copy time (A4, feed from cassette)		B/W : 11.7 s or less Color : 13.6 s or less			
Warm-up time (22 °C/71.6 °F, 60% RH)		Power on : 50 s or less Sleep mode : 23 s or less		Power on : 40 s or less Sleep mode : 23 s or less	
Paper capacity	Cassette	500 sheets (80g/m²)			
	MP tray	100 sheets (80 g/m², plain paper, A4/Letter or less) 25 sheets (80 g/m², plain paper, A4/Letter or more)			
Output tray capacity		Inner tray : 250 sheets (80g/m²) Job separator : 150 sheets (80g/m²)			

Item		Specifications	
		20ppm	25ppm
Continuous copying		1 to 999 sheets	
Light source		White LED	
Scanning system		Flat bed scanning by CCD image sensor	
Photoconductor		a-Si drum (diameter 30 mm)	
Image write system		Semiconductor laser:	
Charging system		Contact charger roller method	
Developer system		Touch down developing system Developer: 2-component Toner replenishing: Automatic from the toner container	
Transfer system		Primary: Transfer belt Secondary: Transfer roller	
Separation system		Small diameter separation, separation electrode	
Cleaning system		Counter blade cleaning	
Charge erasing system		Exposure by cleaning lamp (LED)	
Fusing system		One axis IH established method Heat source: IH inverter heating Abnormally high temperature protection devices: thermostat	
CPU		PowerPC464 (800MHz)	
Main memory	Standard	1024 MB	
	Maximum	2048 MB	
Interface	Standard	USB interface connector: 1 (USB Hi-speed) USB host: 2 (USB Hi-speed) Network interface: 1 (10BASE-T/100/1000BASE-TX)	
	Option	eKUIO slot: 2	
Resolution		600 × 600 dpi	
Operating environment	Temperature	10 to 32.5 °C/50 to 90.5 °F	
	Humidity	15 to 80% RH	
	Altitude	2,500 m/8,202 ft or less	
	Brightness	1,500 lux or less	
Dimensions (W × D × H)		590 × 590 × 748 mm / 23 1/4” × 23 1/4 “× 29 7/16”	
Weight		80 kg / 176.4 lb (with toner containers)	
Space required (W × D)		874× 590 mm / 34 7/16” × 23 1/4” (using MP tray)	
Power source		120 V AC, 60 Hz, more than 12.0 A 220 - 240 V AC, 50/60 Hz, more than 6.5 A	
Options		Paper feeder (single cassette), Paper feeder (double cassette), Document finisher, Network kit, Fax kit, Expanded memory, Card Authentication KIT	

Document processor

Item	Specifications
Original feed method	Automatic feed
Supported original types	Sheet originals
Original sizes	Maximum: A3/Ledger Minimum : A5/Statement
Original weights	Simplex: 45 to 160 g/m^2 Duplex : 50 to 120 g/m^2
Loading capacity	50 sheets (50 to 80 g/m^2) or less
Dimensions (W × D × H)	590 × 489 × 123 mm / 23 1/4” × 19 1/4” × 4 13/16”
Weight	7 kg / 15.4 lb or less

Printer

Item		Specifications			
		20ppm		25ppm	
Printing speed (Simplex)		Color	B/W	Color	B/W
	A4/Letter	20 sheets/min	20 sheets/min	25 sheets/min	25 sheets/min
	A4R/LetterR	14 sheets/min	14 sheets/min	17 sheets/min	17 sheets/min
	A3/Ledger	10 sheets/min	10 sheets/min	13 sheets/min	13 sheets/min
	B4/Legal	10 sheets/min	10 sheets/min	13 sheets/min	13 sheets/min
	B5	20 sheets/min	20 sheets/min	25 sheets/min	25 sheets/min
	B5R	14 sheets/min	14 sheets/min	17 sheets/min	17 sheets/min
	A5R	10 sheets/min	10 sheets/min	13 sheets/min	13 sheets/min
Printing speed (Duplex)		Color	B/W	Color	B/W
	A4/Letter	16 sheets/min	16 sheets/min	20 sheets/min	25 sheets/min
	A4R/LetterR	11 sheets/min	11 sheets/min	14 sheets/min	14 sheets/min
	A3/Ledger	8 sheets/min	8 sheets/min	10 sheets/min	10 sheets/min
	B4/Legal	8 sheets/min	8 sheets/min	10 sheets/min	10 sheets/min
	B5	16 sheets/min	16 sheets/min	20 sheets/min	20 sheets/min
	B5R	14 sheets/min	11 sheets/min	14 sheets/min	14 sheets/min
	A5R	8 sheets/min	8 sheets/min	10 sheets/min	10 sheets/min
First print time (A4, feed from cassette)		B/W : 10.0 s or less Color : 12.0 s or less			
Resolution		600 × 600 dpi			
Operating system		Windows 2000, Windows XP, Windows XP Professional, Windows Server 2003, Windows Server 2003 x64 Edition, Windows Vista x86 Edition, Windows Vista x64 Edition, Windows 7 x86 Edition, Windows 7 x64 Edition, Windows Server 2008, Windows Server 2008 x64 Edition, Apple Macintosh OS 10.x			
Interface		USB interface connector: 1 (USB Hi-speed) Network interface: 1 (10BASE-T/100/1000BASE-TX)			
Page description language		PRESCRIBE			

Scanner

Item		Specifications
Operating system		Windows 2000 (Service Pack 2), Windows XP, Windows Vista, Windows 7, Windows Server 2003, Windows Server 2008
System requirements		IBM PC/AT compatible CPU: Celeron 600 MHz or higher RAM: 128 MB or more HDD free space: 20 MB or more Interface: Ethernet
Resolution		600 dpi, 400 dpi, 300 dpi, 200 dpi, 200 × 100dpi, 200 × 400dpi
File format		JPEG, TIFF, PDF, XPS
Scanning speed	**Simplex**	B/W : 40 images/min Color: 40 images/min (A4 landscape,300 dpi, Image quality: Text/Photo original)
	Duplex	B/W : 24 images/min Color : 24 images/min (A4 landscape, 300 dpi, Image quality: Text/Photo original)
Interface		Ethernet (10 BASE-T/100 BASE-TX)
Network protocol		TCP/IP
Transmission system		PC transmission SMB Scan to SMB FTP Scan to FTP, FTP over SSL E-mail transmission SNTP Scan to E-mail TWAIN scan*1 WIA scan*2

*1 Available operating system: Windows 2000 (Service Pack 2), Windows XP, Windows Vista, Windows Server 2008, Windows 7

*2 Available operating system: Windows Vista, Windows Server 2008, Windows 7

NOTE: These specifications are subject to change without notice.

1-1-2 Parts names

(1) Machine (front side)

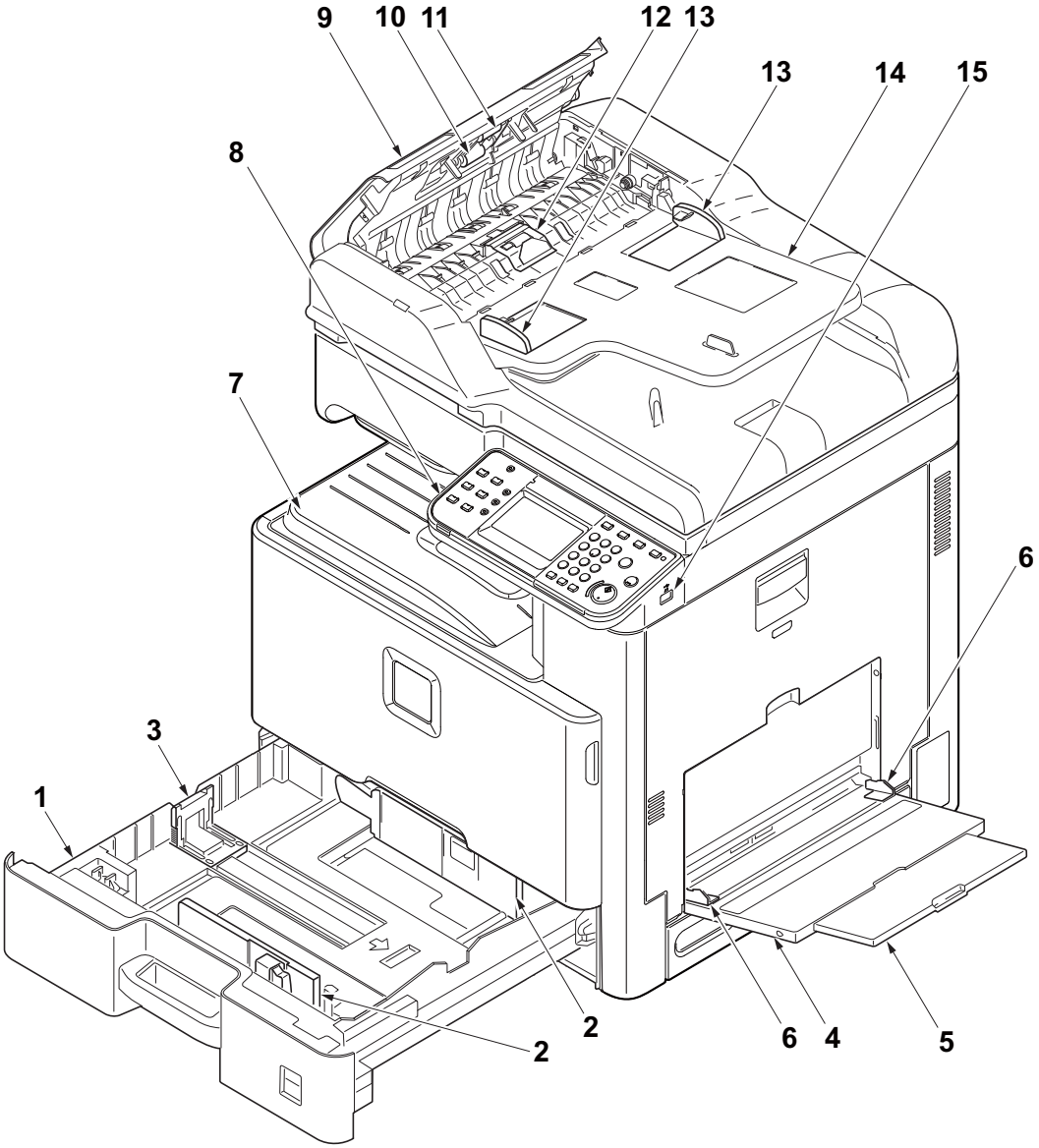

Figure 1-1-1

1. Cassette
2. Paper width guides
3. Paper length guide
4. MP (multi purpose) tray
5. MP tray extension
6. MP Paper width guides
7. Inner tray
8. Operation panel
9. DP top cover
10. DP paper feed roller
11. DP forwarding roller
12. DP separation pully
13. DP original width guides
14. Original table
15. USB memory slot

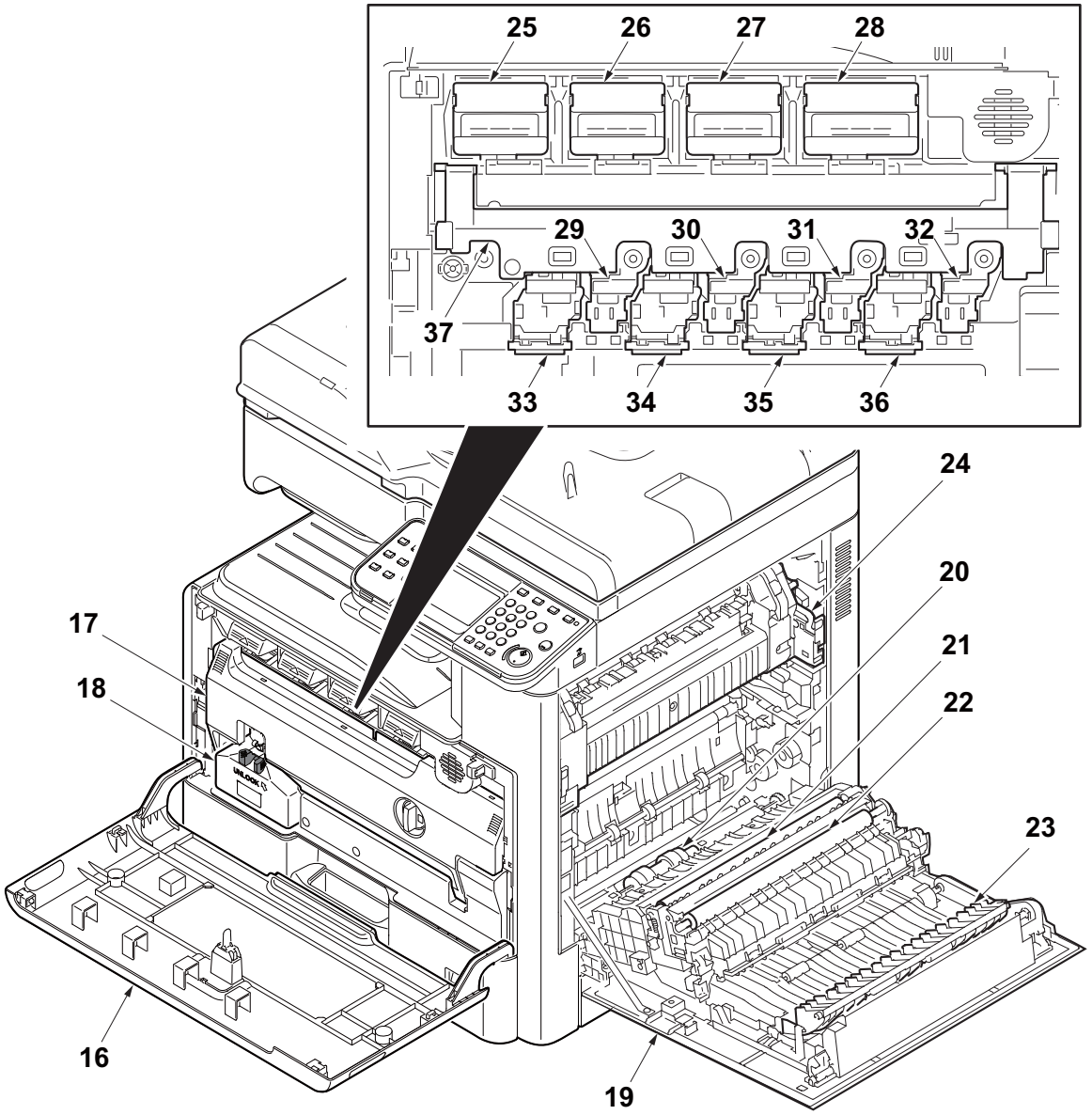

Figure 1-1-2

16. Front cover
17. Duct cover
18. Waste toner box
19. Right cover 1
20. MP paper feed roller
21. Right registration roller
22. Secondary transfer roller
23. Feed shift guide
24. Fuser unit
25. Toner container /Y
26. Toner container /C
27. Toner container /M
28. Toner container /K
29. Drum unit /Y
30. Drum unit /C
31. Drum unit /M
32. Drum unit /K
33. Developer unit /Y
34. Developer unit /C
35. Developer unit /M
36. Developer unit /K
37. Duct holder

(2) Machine (rear side)

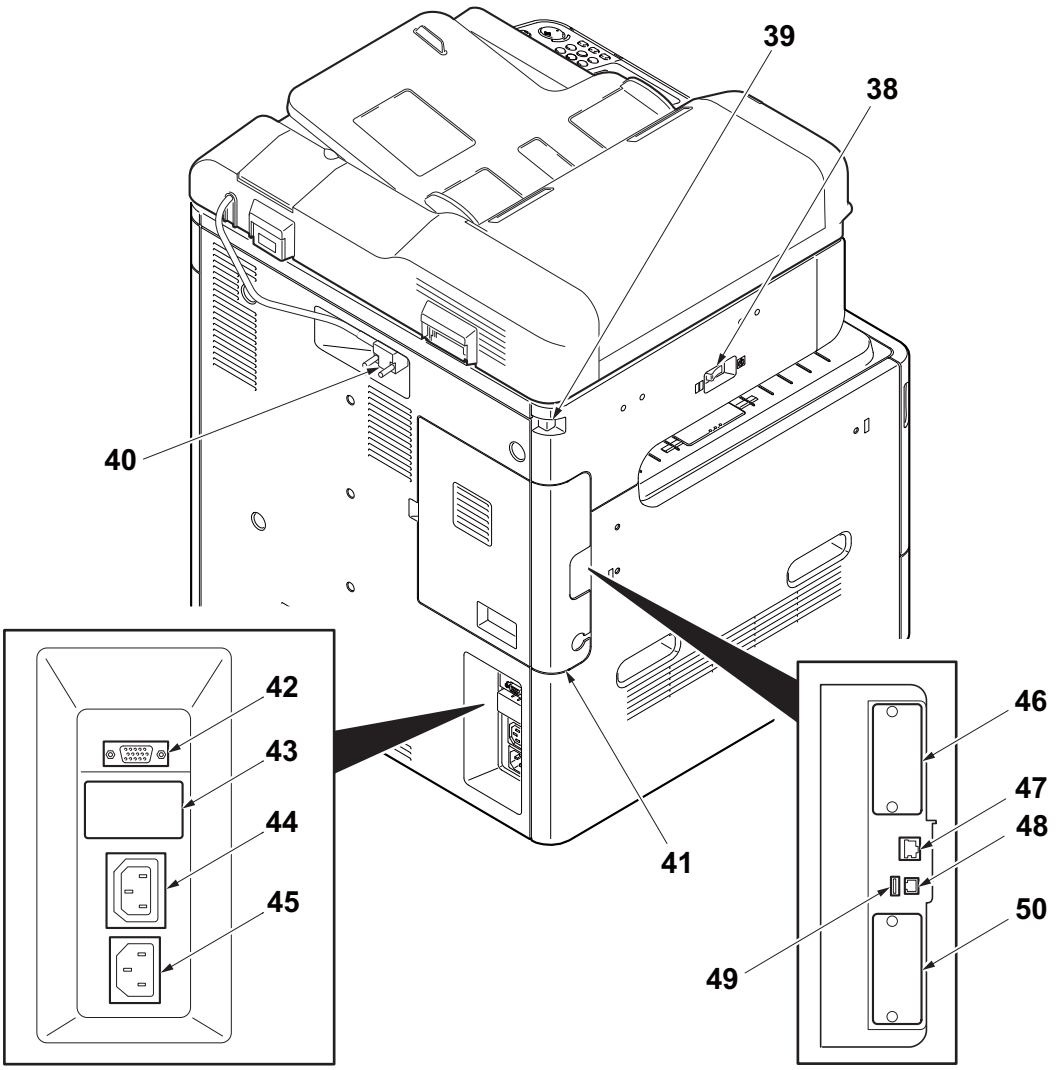

Figure 1-1-3

38. Main power switch
39. Scanner lock lever
40. DP interface connector
41. Controller box cover
42. DF interface connector
43. Cassette heater switch (cover)
44. Outlet connector
45. Inlet connector
46. Option interface slot 1
47. Network interface connector
48. USB port
49. USB interface connector
50. Option interface slot 2

(3) Operation panel

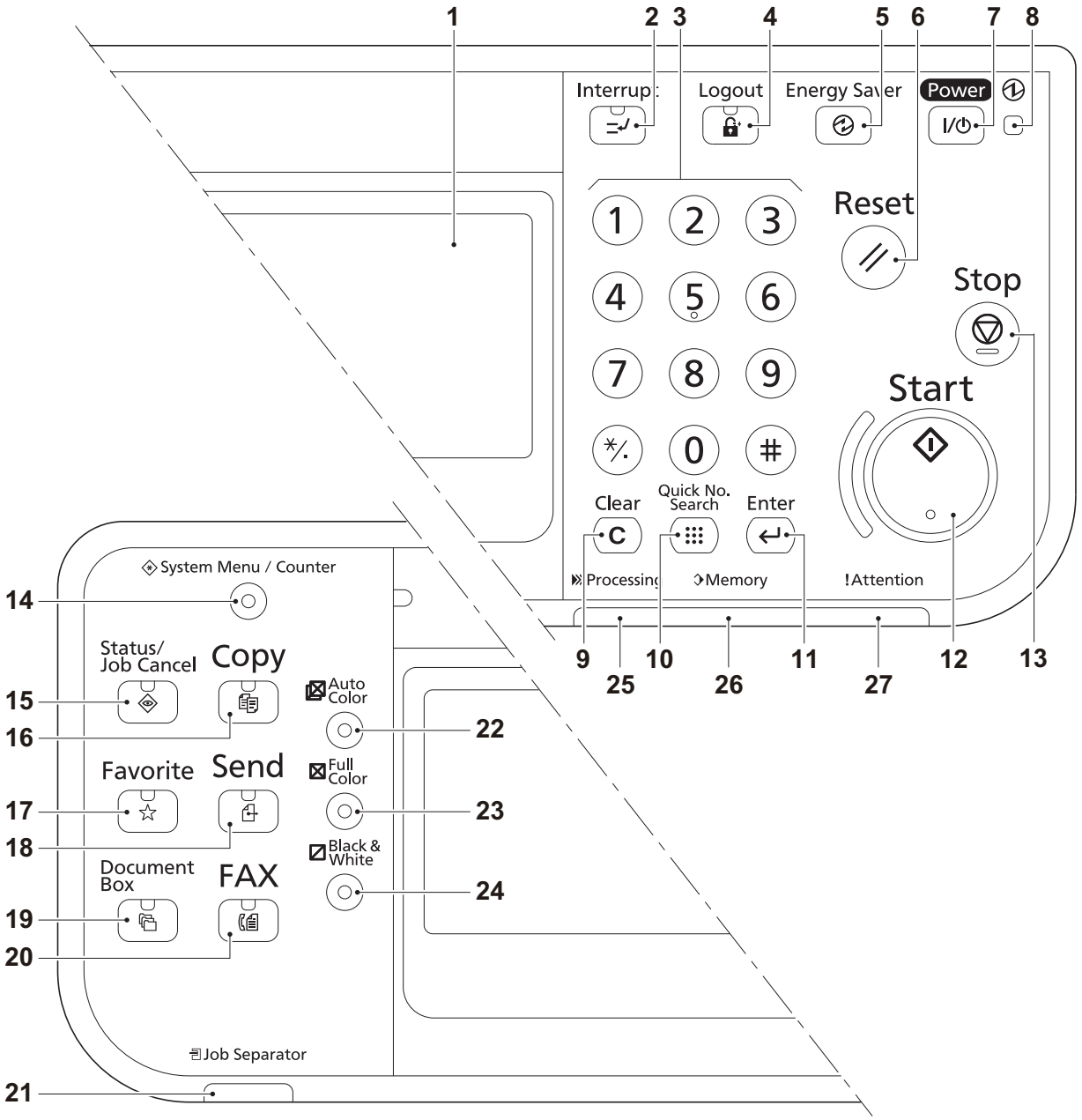

Figure 1-1-4

1. Message display
2. Interrupt key / LED
3. Numeric keys
4. Logout key / LED
5. Energy saver / LED
6. Reset key
7. Power key / LED
8. Main power LED
9. Clear key
10. Quick No.search key
11. Enter key
12. Start key / LED
13. Stop key
14. System menu/Counter key / LED
15. Status/Job cancel / LED
16. Copy key / LED
17. Favorite key / LED
18. Send key / LED
19. Document box key / LED
20. FAX key / LED
21. Job separator LED
22. Auto color key / LED
23. Full color key / LED
24. Black & white key / LED
25. Processing LED
26. Memory LED
27. Attention LED

1-1-3 Machine cross section

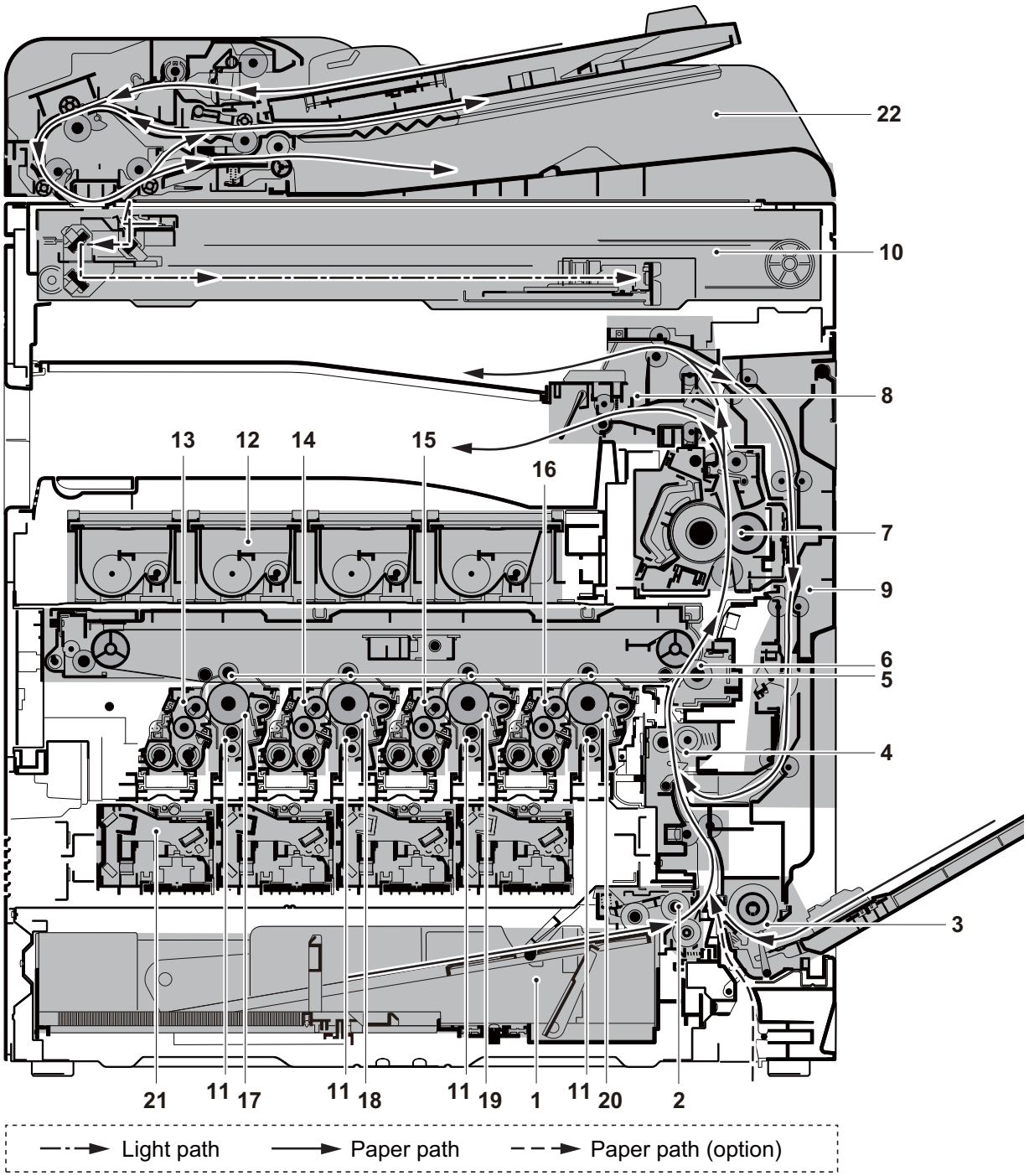

Figure 1-1-5

1. Cassette
2. Cassette paper feed section
3. MP tray paper feed section
4. Conveying section
5. Primary transfer section
6. Secondary transfer section / Separation sections
7. Fuser unit
8. Eject section
9. Duplex/conveyning section
10. Image scanner unit (ISU)
11. Charger roller unit
12. Toner container /YCMK
13. Developer unit /Y
14. Developer unit /C
15. Developer unit /M
16. Developer unit /K
17. Drum unit /Y
18. Drum unit /C
19. Drum unit /M
20. Drum unit /K
21. Laser scanner unit (LSU) /YCMK
22. Document processor (DP)

1-2-1 Installation environment

1. Temperature: 10 to 32.5°C/50 to 90.5°F
2. Humidity: 15 to 80% RH
3. Power supply: 120 V AC, 12.0 A
   220 - 240 V AC, 6.5 A
4. Power supply frequency: 50 Hz ±2%/60 Hz ±2%
5. Installation location
   Avoid direct sunlight or bright lighting. Ensure that the photoconductor will not be exposed to direct sunlight or other strong light when removing paper jams.
   Avoid locations subject to high temperature and high humidity or low temperature and low humidity; an abrupt change in the environmental temperature; and cool or hot, direct air.
   Avoid places subject to dust and vibrations.
   Choose a surface capable of supporting the weight of the machine.
   Place the machine on a level surface (maximum allowance inclination: 1°).
   Avoid air-borne substances that may adversely affect the machine or degrade the photoconductor, such as mercury, acidic of alkaline vapors, inorganic gasses, NOx, SOx gases and chlorine-based organic solvents.
   Select a well-ventilated location.
6. Allow sufficient access for proper operation and maintenance of the machine.

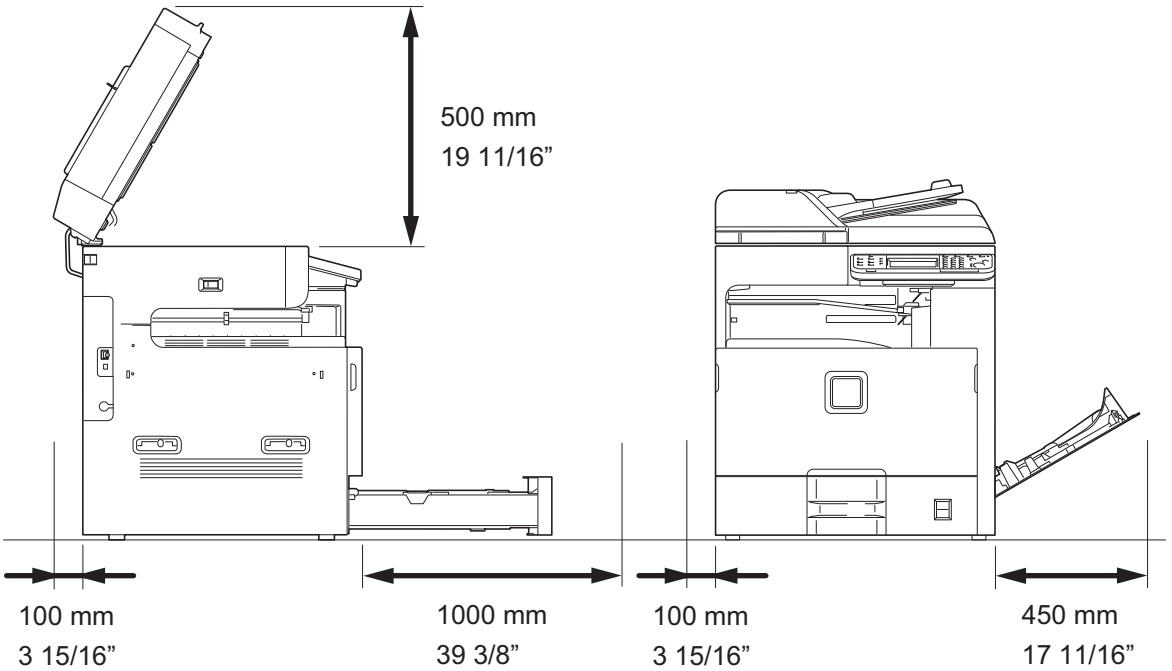

Figure 1-2-1

1-2-2 Unpacking and installation

(1) Installation procedure

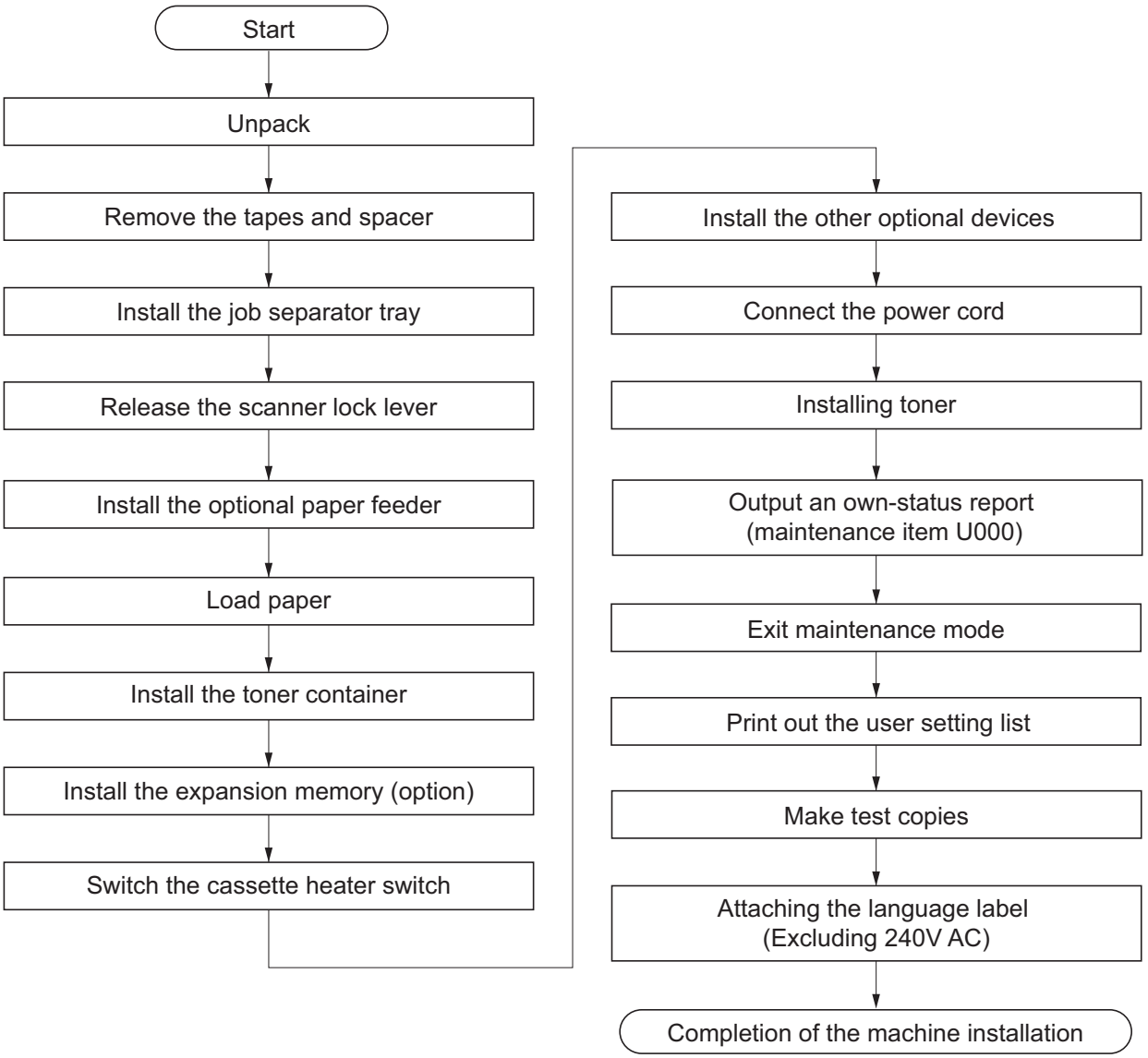

Unpacking

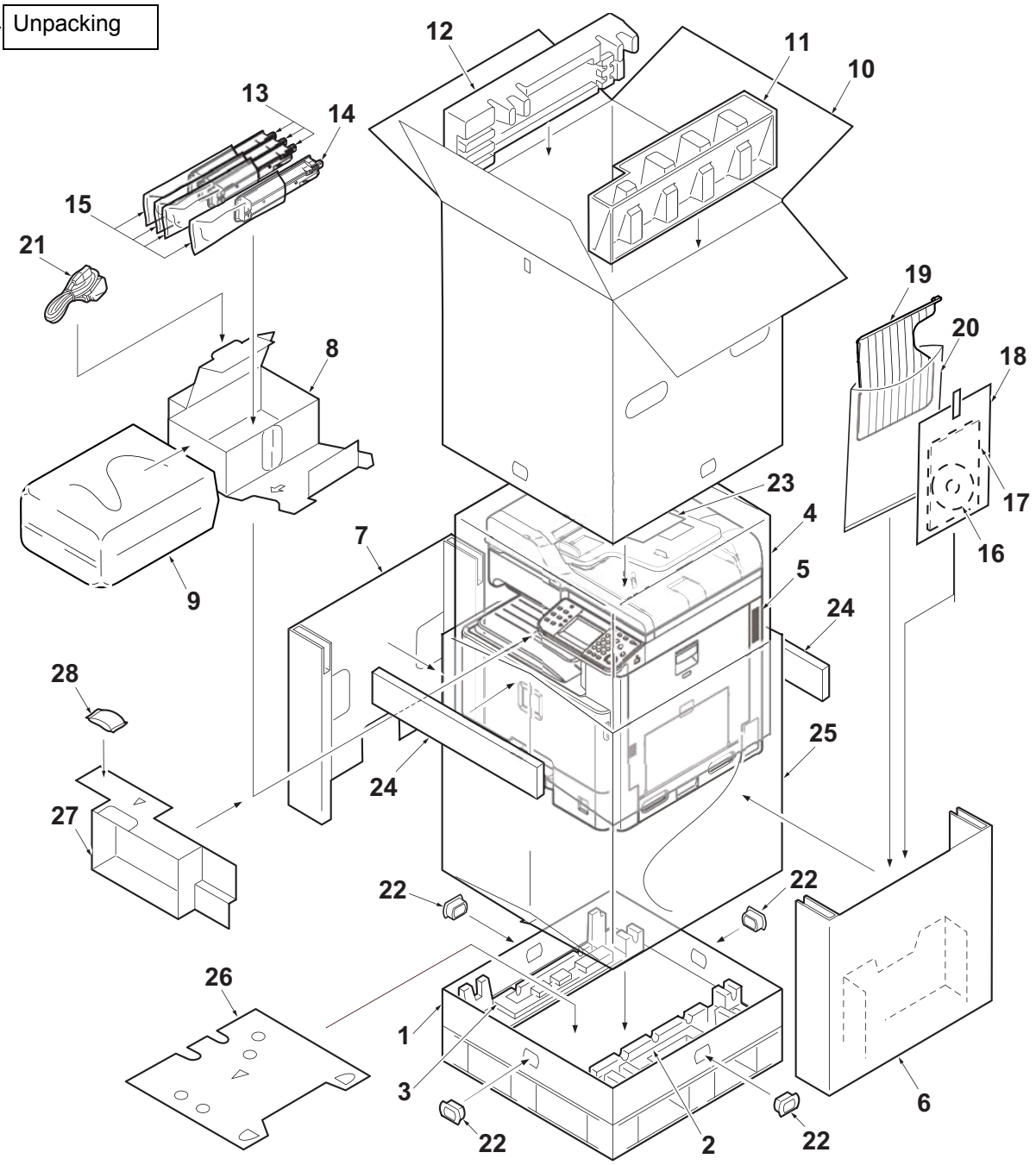

Figure 1-2-2

1. Bottom case
2. Bottom pad R
3. Bottom pad L
4. Machine cover
5. Machine
6. Inner case R
7. Inner case L
8. Spacer A
9. Plastic bag (540 × 950)
10. Outer case
11. Upper pad R
12. Upper pad L
13. Toner container /YCM
14. Toner container /K
15. Plastic bag (250 × 650)
16. CD-ROM *1
17. Installation guide, etc.
18. Plastic bag
19. Job separator tray
20. Plastic bag (400 × 600)
21. Power cord
22. Hinge joints
23. Quick installation guide
24. Reinforcement parts
25. Plastic bag
26. Lower pad
27. Front pad
28. Desiccant

*1 Excluding 230V AC model

Place the machine on a level surface.

Remove the tapes and spacer

1. Remove four tapes.

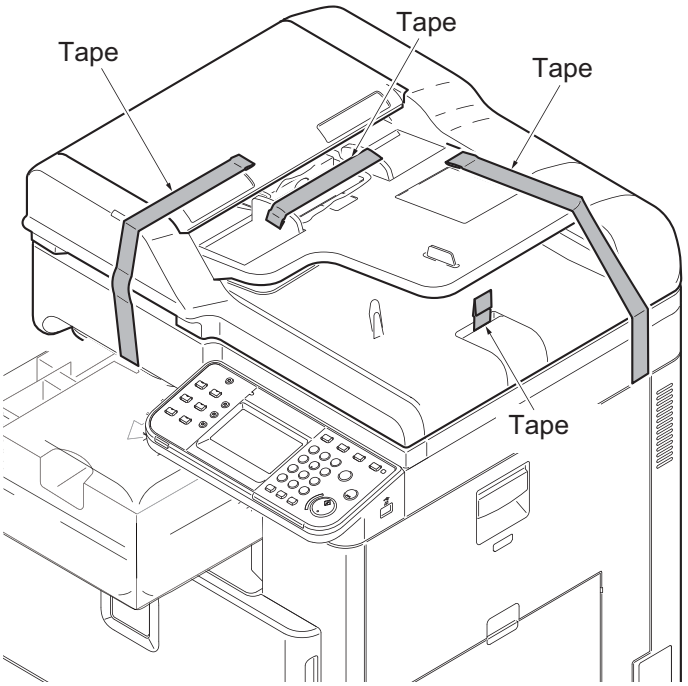

Figure 1-2-3

2. Open the DP top cover.
3. Slide two DP original width guides and then remove the pad.
4. Close the DP top cover.

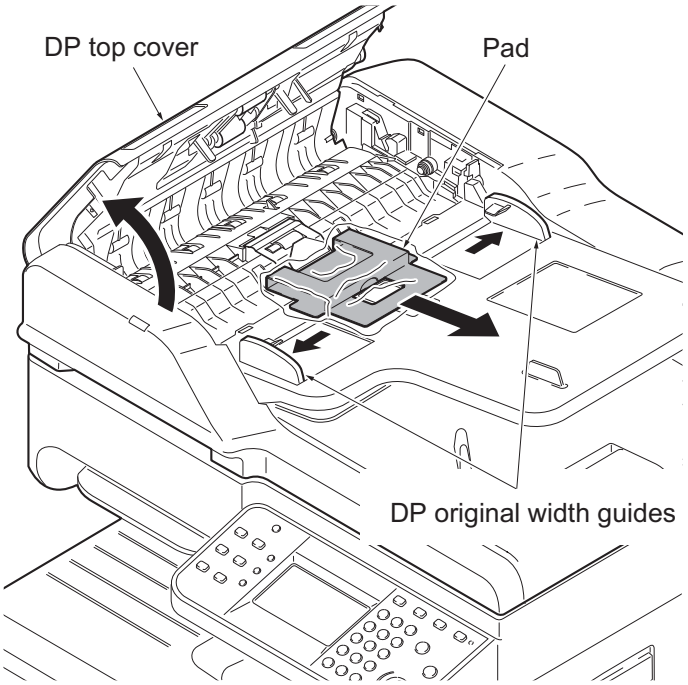

Figure 1-2-4

5. Open the DP.
6. Remove the protective sheet and paper.

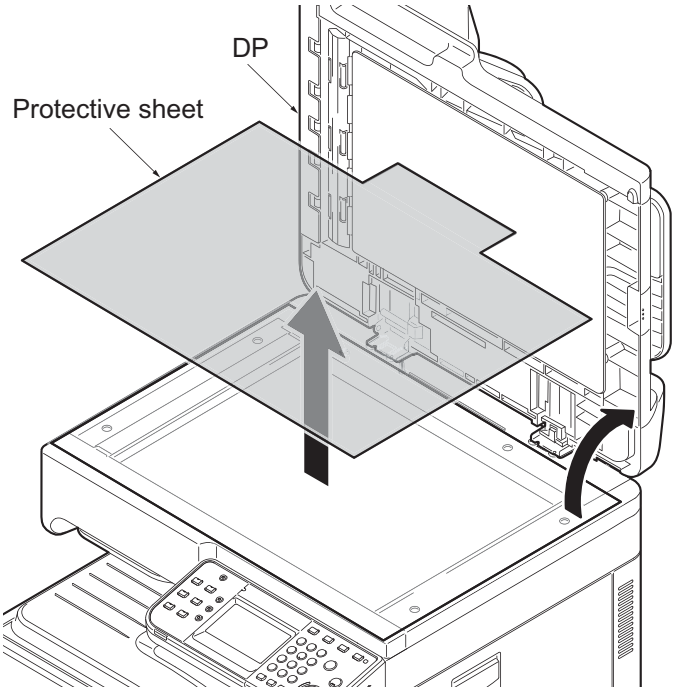

Figure 1-2-5

7. Remove the paper.
8. Close the DP.

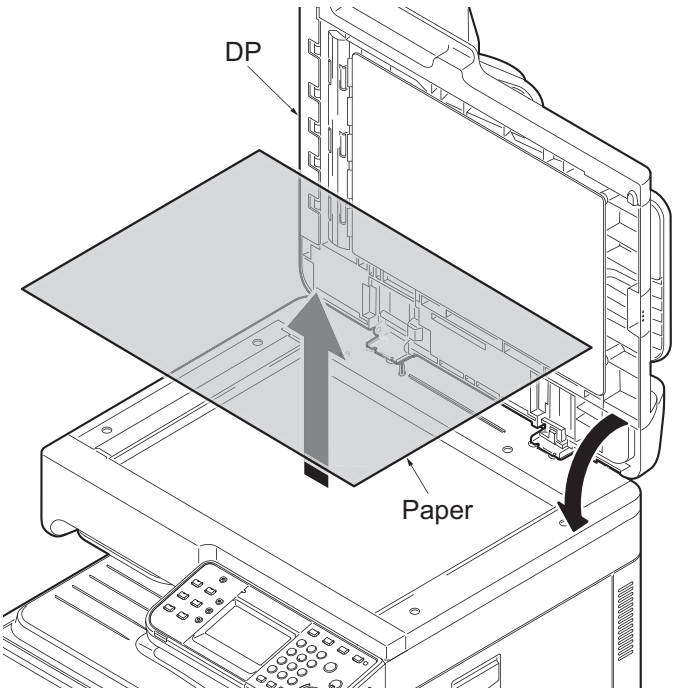

Figure 1-2-6

9. Remove the tape.

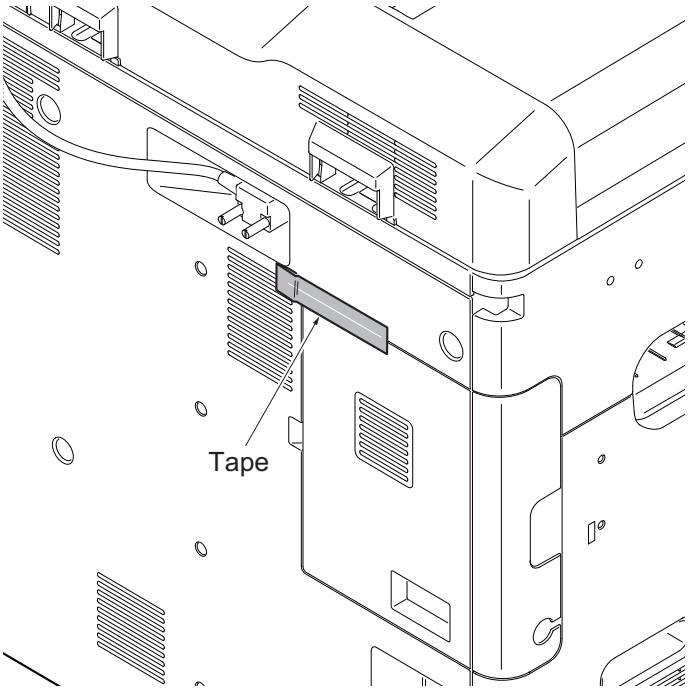

Figure 1-2-7

10. Peel off two protective sheets.
11. Remove the spacer.

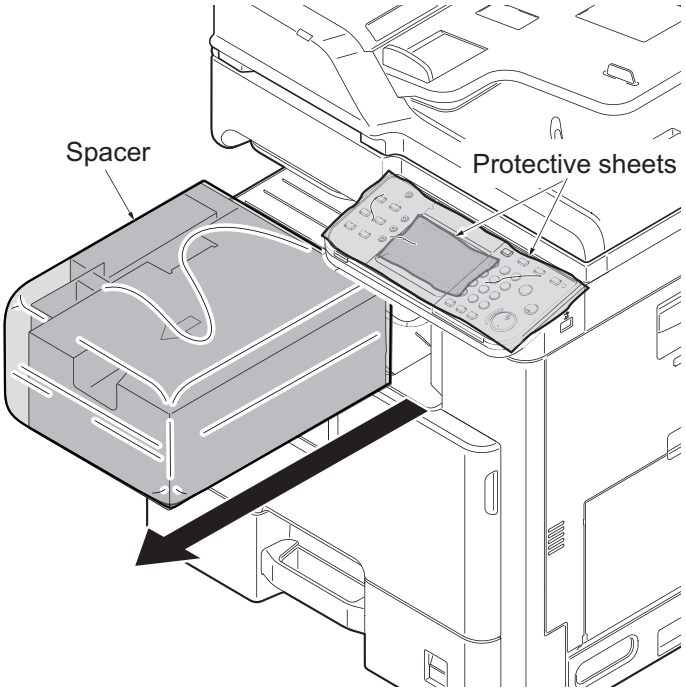

Figure 1-2-8

Install the job separator tray

1. Gently push the job separator tray into the machine along the guides.

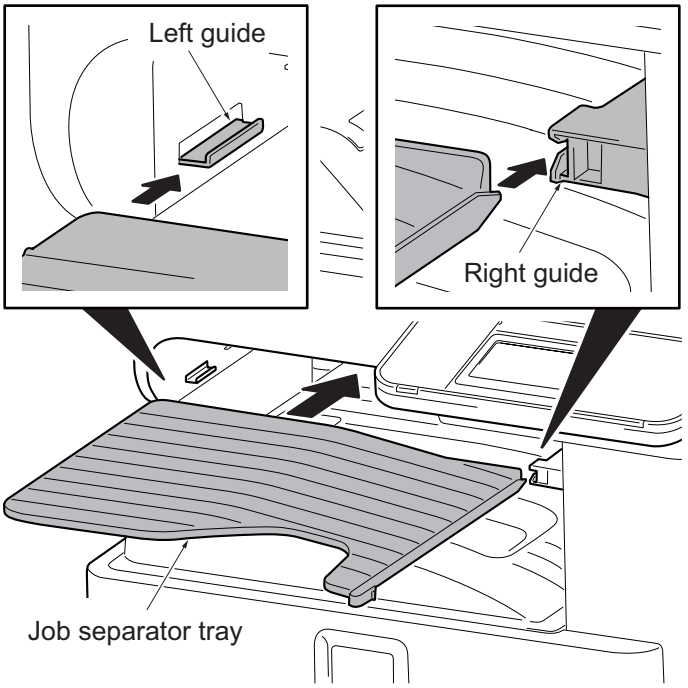

Figure 1-2-9

Release the scanner lock lever

1. Pull the scanner lock lever in the direction of the arrow. This will unlock the scanner mechanism.

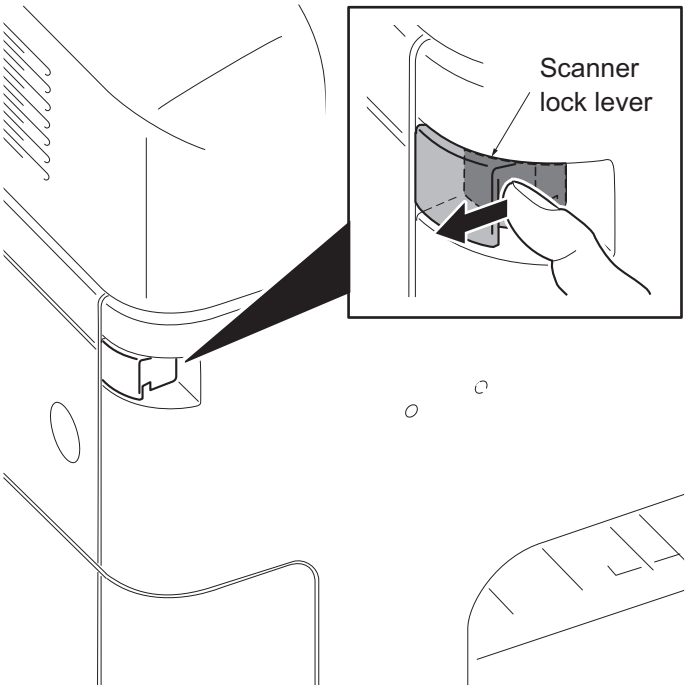

Figure 1-2-10

Install the optional paper feeder

1. Install the optional paper feeder as required.

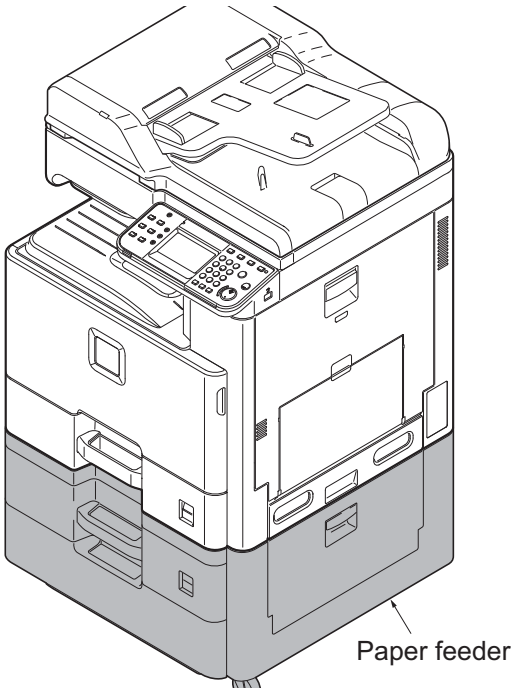

Figure 1-2-11

Load paper

1. Pressing the paper width adjusting tab as shown, move the paper width guides to fit the paper size.

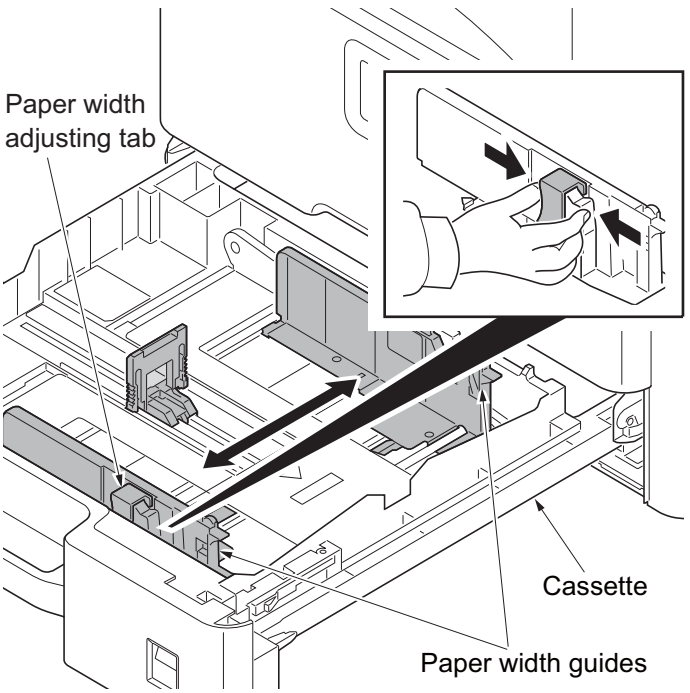

Figure 1-2-12

2. Adjust the paper length guide to fit the paper size.

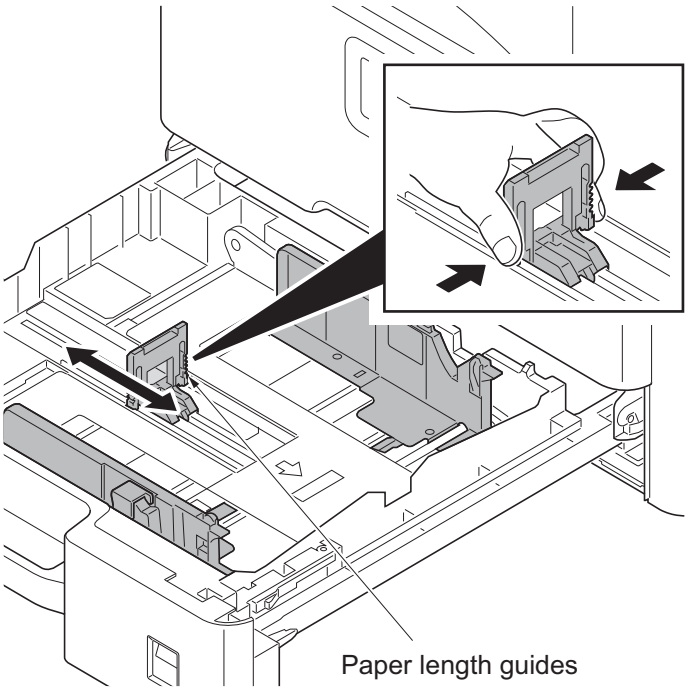

Figure 1-2-13

3. Align the paper so that it is abut with the right end of the cassette.
4. Insert the cassette size plate.
5. Gently push the cassette back in.

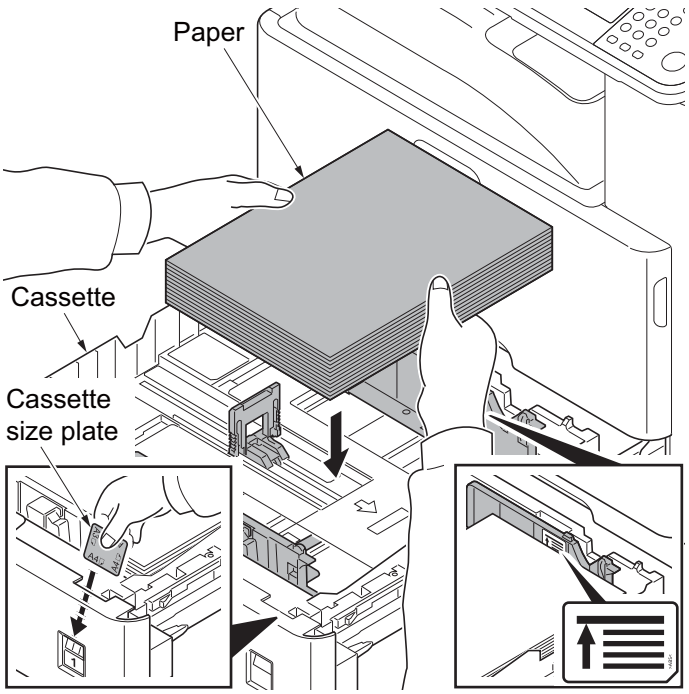

Figure 1-2-14

Install the toner container

1. Open the front cover.
2. Hold the toner container vertically and tap the upper part five times or more. Turn the toner container upside down and tap the upper part five times or more.

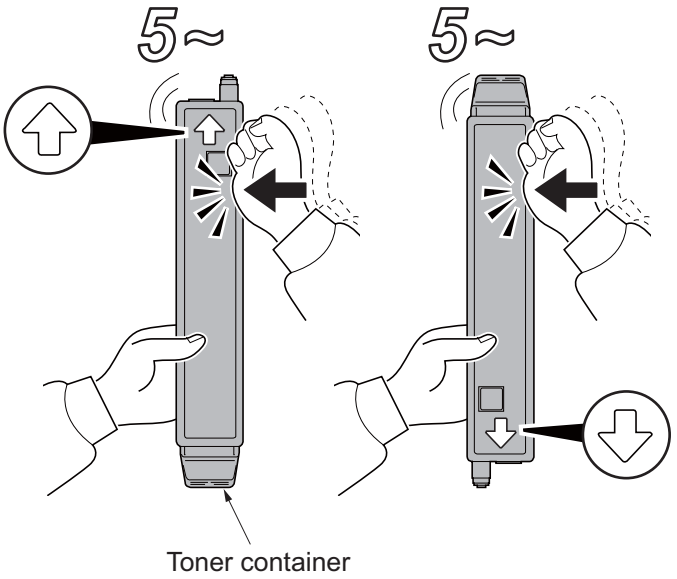

Figure 1-2-15

3. Shake the toner container up and down five times or more.
   Turn the toner container upside down and shake it five times or more.

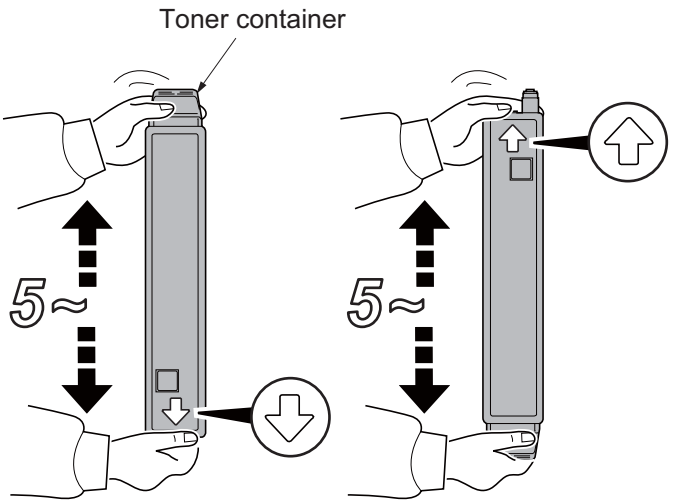

Figure 1-2-16

4. Shake the toner container approximately five or six times in the horizontal direction to stir toner.

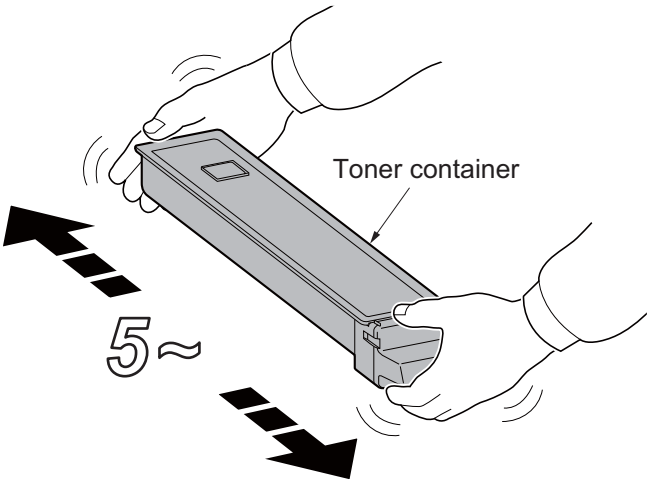

Figure 1-2-17

5. Gently push the toner container into the machine.
   Push the container all the way into the machine until it locks in place.

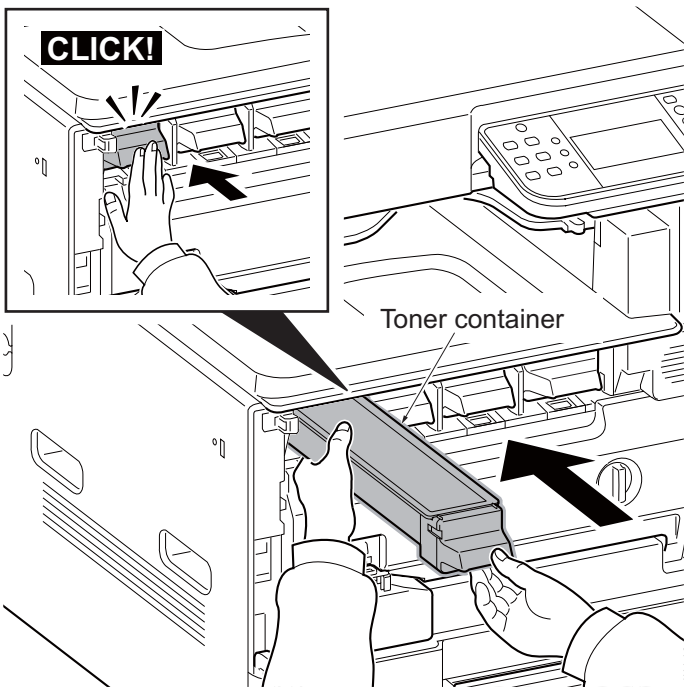

Figure 1-2-18

Switch the cassette heater switch

1. Release the hook and then remove the switch cover.
2. Turn the cassette heater switch on.
   Note: When the cassette heater is used, it turns it on.
3. Refit the switch cover.

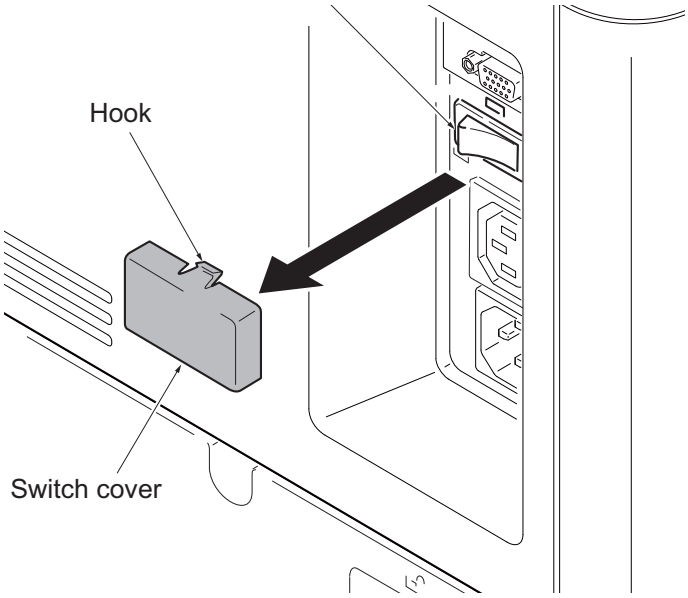

Figure 1-2-19

Install the other optional devices

1. Install the optional devices (Document finisher, Fax kit, etc.) as required.

Connect the power cord

1. Connect the power cord to the connector on the machine.
2. Insert the power plug into the wall outlet.

Installing toner

1. Turn the main power switch on.
   The machine automatically starts to feed toner in the developer unit.
   Note: When the main power switch is turned on for the first time, it takes about one minute until entering the state that can be copied.
2. The drive chain is disengaged when toner installation is completed.

Output an own-status report (maintenance item U000)

1. Enter 000 using the numeric keys and press the start key.
2. Select Maintenance and press the start key to output a list of the current settings of the maintenance items.
3. Press the stop key.

Exit maintenance mode

1. The machine is reactivated by switching the main power switch off and on.

Print out a user setting list

1. Select [Report Print] to print a user setting list.

Make test copies

1. Place an original and make test copies.

Attaching the language label (Excluding 240V AC)

1. Attach the corresponding language label as required.

Installation is completed.

(2) Setting initial copy modes

Factory settings are as follows:

Maintenance item No.	Contents	Factory setting
U253	Switching between double and single counts	Double count (A3/Ledger)
U260	Selecting the timing for copy counting	Eject
U285	Setting service status page	On
U326	Setting the black line cleaning indication	On/8
U343	Switching between duplex/simplex copy mode	Off

1-2-3 Install the expansion memory (option)

Procedure

1. Turn off the main power switch.
   Caution: Do not insert or remove expansion memory while machine power is on.
   Doing so may cause damage to the machine and the expansion memory.
2. Release four hooks and then remove the controller box cover.
3. Remove two screws.

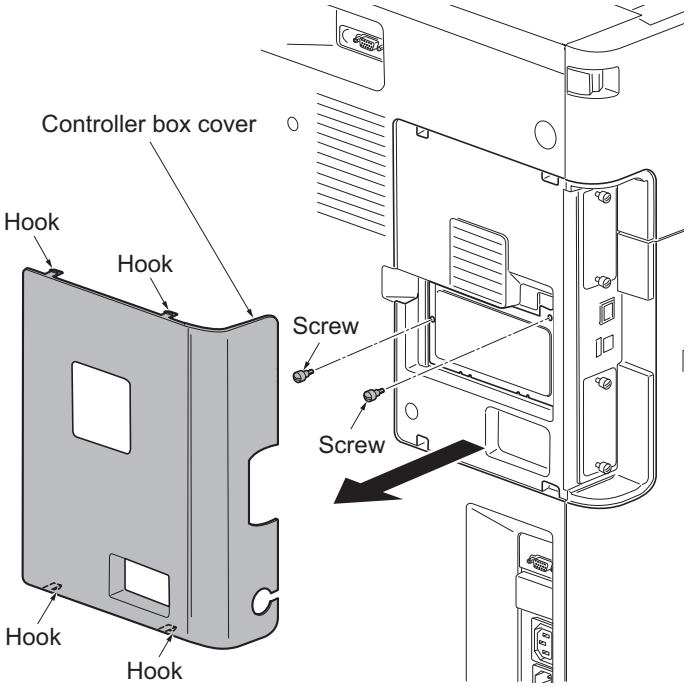

Figure 1-2-20

4. Remove the memory slot cover.
5. Insert the expansion memory into the memory socket so that the notches on the memory align with the corresponding protrusions in the slot.
6. Refit the memory slot cover.
7. Refit two screws.
8. Refit the controller box cover.
9. Print a status page to check the memory expansion.(See 1-3-98)
   If memory expansion has been properly performed, information on the installed memory is printed with the total memory capacity has been increased. Standard memory capacity is 1024 MB.

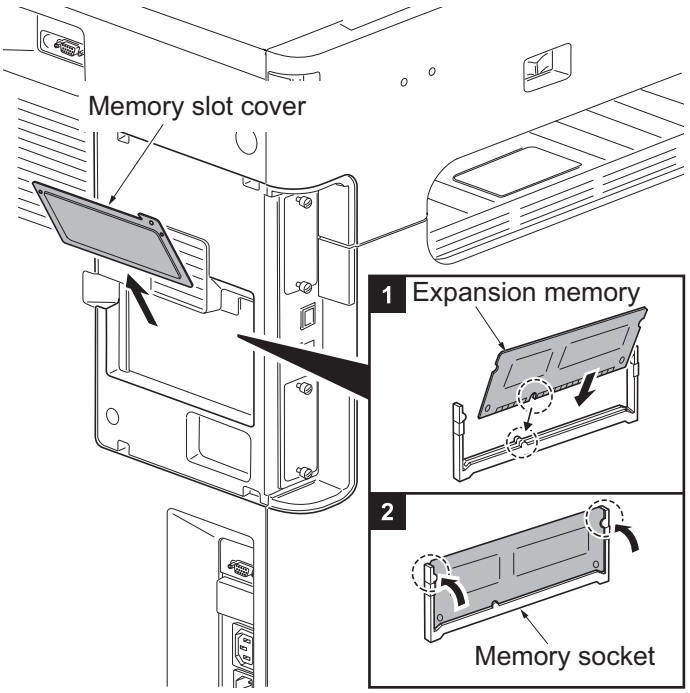

Figure 1-2-21

1-3-1 Maintenance mode

The machine is equipped with a maintenance function which can be used to maintain and service the machine.

(1) Executing a maintenance item

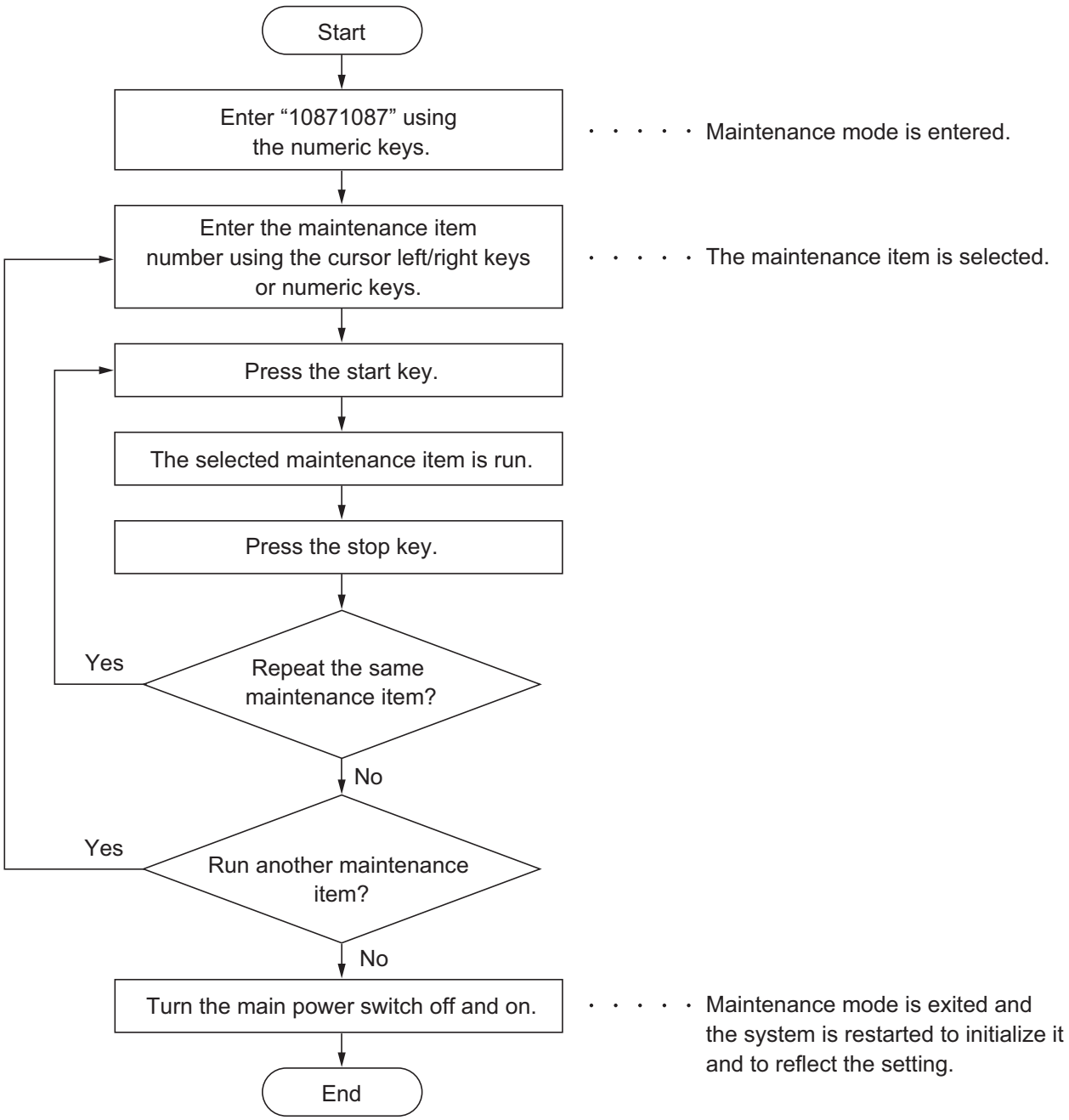

(2) Maintenance modes item list

Section	Item No.	Content of maintenance item	Initial setting
General	U000	Outputting an own-status report	-
	U002	Setting the factory default data	-
	U004	Setting the machine number	-
	U019	Displaying the ROM version	-
Initialization	U021	Memory initializing	-
Drive, paper feed and paper conveying system	U030	Checking the operation of the motors	-
	U031	Checking switches and sensors for paper conveying	-
	U032	Checking the operation of the clutches	-
	U033	Checking the operation of the solenoids	-
	U034	Adjusting the print start timing Leading edge registration Center line	 0/0/0 0/0/0/0/0
	U035	Setting the printing area for folio paper	330/210
	U037	Checking the operation of the fan motors	-
	U051	Adjusting the deflection in the paper	0/0/0/0
	U053	Setting the adjustment of the motor speed	-/0/5/5/0/5/10/0/0
Optical	U063	Adjusting the shading position	0
	U065	Adjusting the scanner magnification	0/0
	U066	Adjusting the scanner leading edge registration	0/0
	U067	Adjusting the scanner center line	0/0
	U068	Adjusting the scanning position for originals from the DP	0/0
	U070	Adjusting the DP magnification	0/0
	U071	Adjusting the DP scanning timing	0/0/0/0
	U072	Adjusting the DP center line	0/0
	U074	Adjusting the DP input light luminosity	0
	U089	Outputting a MIP-PG pattern	-
	U099	Adjusting original size detection	40/30/20/19 50/50/50/49 (When DP is installed.)

Section	Item No.	Content of maintenance item	Initial setting
High voltage	U100	Setting the main high voltage	145/145/145/145
	U101	Setting the voltage for the primary transfer	55/35 0/15/5/20 -3/-3/-3/-3 10
	U106	Setting the voltage for the secondary transfer	60/60/45/40 80/82/55/40 53/55/41/35 47/52/39/32 45/48/38/30 43/45/35/27 35/45/35/35/25/30 55/45/40/65/55/38 50/41/32/50/40/30 40/38/27/37/36/25
	U107	Setting the voltage for the intermediate transfer cleaning	-
	U108	Setting separation shift bias	-
	U111	Checking the drum drive time	-
	U118	Displaying the drum history	-
	U127	Checking/clearing the transfer count	-
Developer	U135	Checking toner motor operation	-
	U136	Setting toner near end detection	0/0
	U139	Displaying the temperature and humidity outside the machine	-
	U140	Setting developer bias	450/150/36/27/1400 480/180/36/27/1400 480/180/36/27/1400 450/150/36/27/1400 50/150/36/27/1000 50/150/36/27/1000 50/150/36/27/1000 50/150/36/27/1000 350/180/36/27/1200 350/180/36/27/1200 350/180/36/27/1200 350/180/36/27/1200 0/0 0/0 0/0 0/0
	U147	Setting for toner applying operation	0/60
	U150	Checking sensors for toner	-
	U157	Checking the developing drive time	0/0/0/0

Section	Item No.	Content of maintenance item	Initial setting
Fuser	U161	Setting the fuser control temperature	210/240/190/140/100/130/150/160/160/130/160/240/90/60/240/100
	U167	Displaying fuser heater temperature	0
	U169	Confirmation/setting the fuser power supply	0
	U199	Displaying fuser heater temperature	-
Operation panel and support equipment	U201	Initializing the touch panel	-
	U203	Checking DP operation	-
	U207	Checking the operation panel keys	-
	U222	Setting the IC card type	Other
	U243	Checking the operation of the DP motors	-
	U244	Checking the DP switches	-
Mode setting	U250	Checking/clearing the maintenance cycle	200000/200000/0
	U251	Checking/clearing the maintenance counter	0/0/0
	U252	Setting the destination	-
	U253	Switching between double and single counts	Double count (A3/Ledger)
	U260	Selecting the timing for copy counting	Eject
	U285	Setting service status page	ON
	U325	Setting the paper interval	1
	U326	Setting the black line cleaning indication	ON/8
	U332	Setting the size conversion factor	1.0
	U341	Specific paper feed location setting for printing function	Off/Off/Off
	U343	Switching between duplex/simplex copy mode	Off
	U345	Setting the value for maintenance due indication	0

Section	Item No.	Content of maintenance item	Initial setting
Image processing	U402	Adjusting margins of image printing	3.0/2.5/2.5/5.0
	U403	Adjusting margins for scanning an original on the contact glass	2.0/2.0/2.0/2.0
	U404	Adjusting margins for scanning an original from the DP	3.0/2.5/3.0/4.0
	U407	Adjusting the leading edge registration for memory image printing	0
	U411	Adjusting the scanner automatically	-
	U425	Setting the target White Black Gray1 Gray2 Gray3 C M Y R G B Adjust original	 93.6/0.9/-0.4 10.6/-0.2/-0.7 76.2/-0.2/1.2 25.2/-0.2/-0.2 51.3/-0.3/0.3 72.6/-32.8/-11.5 48.1/69.9/-6.1 86.2/-18.6/81.7 46.7/54.2/38.6 67.8/-51.3/48.9 38.8/25.3/-22.8 5/10.0/190.0
	U429	Setting the offset for the color balance Text+Photo Photo Text Graphics/Map Copy/Printout	 0/0/0/0/0 0/0/0/0/0 0/0/0/0/0 0/0/0/0/0 0/0/0/0/0
	U432	Setting the center offset for the exposure	0/0/0
	U464	Setting the ID correction operation	On/On 10/20 935/400 895/200 885/200 846/130
	U470	Setting the JPEG compression ratio Copy Send Photo Text HC-PDF System	 85/85/85/85 30/40/51/70/90 30/40/51/70/90 30/40/51/70/90 30/40/51/70/90 15/25/60 15/25/60 90/90
	U473	Adjusting laser power output	92/92/92/50

Section	Item No.	Content of maintenance item	Initial setting
Others	U901	Checking copy counts by paper feed locations	0/0/0/0/0
	U903	Checking/clearing the paper jam counts	-
	U904	Checking/clearing the call for service counts	-
	U905	Checking counts by optional devices	0/0/0/0
	U910	Clearing the print coverage data	-
	U917	Setting backup data reading/writing	-
	U927	Clearing the all copy counts and machine life counts (one time only)	-
	U942	Setting of deflection for feeding from DP	0/0
	U984	Checking the developing unit number	-
	U985	Displaying the developer history	-

(3) Contents of the maintenance mode items

Item No.	Description
U000	**Outputting an own-status report** **Description** Outputs lists of the current settings of the maintenance items and paper jam and service call occurrences. Outputs the event log. Also sends output data to the USB memory. **Purpose** To check the current setting of the maintenance items, or paper jam or service call occurrences. Before initializing or replacing the backup RAM, output a list of the current settings of the maintenance items to reenter the settings after initialization or replacement. **Method** 1. Press the start key. 2. Select the item to be output using the cursor up/down keys. 3. Select On or Off using the cursor left/right keys or numeric keys. Display: Maintenance — Output list: List of the current settings of the maintenance modes Display: Event — Output list: Outputs the event log Display: All — Output list: Outputs the all reports 4. Press the start key. A list is output. **Method: Send to the USB memory** 1. Press the power key on the operation panel, and after verifying the main power indicator has gone off, switch off the main power switch. 2. Insert USB memory in USB memory slot. 3. Turn the main power switch on. 4. Enter the maintenance item. 5. Press the start key. 6. Select the item to be send. 7. Select [Text] or [HTML]. Display: Print — Output list: Outputs the report Display: USB (Text) — Output list: Sends output data to the USB memory (text type) Display: USB (HTML) — Output list: Sends output data to the USB memory (HTML type) 8. Press the start key. Output will be sent to the USB memory. **Completion** Press the stop key. The screen for selecting a maintenance item No. is displayed.

Item No.	Description
U000	**Event log**

Event Log

MFP

(2) 04/Sep/2010 08:40

(1) Firmware version 2KZ_2000.000.000 2010.09.04

(3) [XXXXXXXX] (4) [XXXXXXXX] (5) [XXXXXXXX]

(7) Paper Jam Log

#	Count.	Event Descriprions
16	1876543	0501.01.08.01.01
15	166554	4002.01.08.01.01
14	4988	0501.01.08.01.01
13	4988	4002.01.08.01.01
12	4988	0501.01.08.01.01
11	4988	4002.01.08.01.01
10	1103	0501.01.08.01.01
9	1103	4002.01.08.01.01
8	1103	0501.01.08.01.01
7	1103	4002.01.08.01.01
6	1027	0501.01.08.01.01
5	1027	4002.01.08.01.01
4	1027	0501.01.08.01.01
3	1027	4002.01.08.01.01
2	406	0501.01.08.01.01
1	36	4002.01.08.01.01

0501.01.08.01.01
(a) (b) (c) (d) (e)

(8) Service Call Log

#	Count.	Service Code
8	1881214	01.6000
7	178944	01.2100
6	5296	01.4000
5	5295	01.6000
4	2099	01.2100
3	1054	01.4000
2	809	01.6000
1	30	01.2100

(9) Maintenance Log

#	Count.	Item
8	1045571	01.00
7	104511	01.00
6	7045	01.00
5	3454	01.00
4	3454	01.01
3	3454	01.01
2	417	01.01
1	34	01.01

(10) Unknown toner Log

#	Count.	Item
5	3454	01.00
4	3454	01.00
3	3454	01.00
2	406	01.00
1	32	01.00

(11) Counter Log

(f)

J0100: 0	J0511: 0	J4201: 0
J0101: 0	J0512: 0	J4202: 0
J0104: 0	J0513: 0	J4203: 0
J0106: 0	J0518: 0	J4208: 0
J0107: 0	J0519: 0	J4209: 0
.	.	.
.	.	.
.	.	.
.	.	.
.	.	.
.	.	.

(g)

C0030: 1	C2000: 1
C0070: 1	C2010: 1
C0100: 1	C2600: 1
C0120: 1	C3100: 1
C0130: 1	C3200: 1
.	.
.	.
.	.
.	.
.	.
.	.

(h) T00: 1
T01: 1

(6) [XXXXXXXXXXXXXXXX]

Figure 1-3-1

Item No.	Description
U000	**Detail of event log**

No.	Items	Description		
(1)	System version			
(2)	System date			
(3)	Engine soft version			
(4)	Engine boot version			
(5)	Operation panel mask version			
(6)	Machine serial number			
(7)	Paper Jam Log	#	Count.	Event
		Remembers 1 to 16 of occurrence. If the occurrence of the previous paper jam is less than 16, all of the paper jams are logged. When the occurrence excesseds 16, the oldest occurrence is removed.	The total page count at the time of the paper jam.	Log code (hexadecimal, 5 categories) (a) Cause of a paper jam (b) Paper source (c) Paper size (d) Paper type (e) Paper eject
		(a) Cause of paper jam (Hexadecimal)		
		Refer to P.1-4-1 for paper jam location 0000: Initial jam 0100: Secondary paper feed request time out 0101: Waiting for process package to be ready 0104: Waiting for conveying package to be ready 0106: Paper feeding request for duplex printing time out 0107: Waiting for fuser package to be ready 0110: Right cover open 0111: Front cover open 0120: Receiving a duplex paper feeding request while paper is empty 0121: Exceeding number of duplex pages circulated 0210: Right lower cover open 0501: No paper feed from cassette 1 0502: No paper feed from cassette 2 0503: No paper feed from cassette 3 0508: No paper feed from duplex section 0509: No paper feed from MP tray 0511: Multiple sheets in cassette 1 0512: Multiple sheets in cassette 2 0513: Multiple sheets in cassette 3 0518: Multiple sheets in duplex section 0519: Multiple sheets in MP tray 1403: PF feed sensor 1 non arrival jam 1413: PF feed sensor 1 stay jam 4002: Registration sensor non arrival jam (cassette 2) 4003: Registration sensor non arrival jam (cassette 3)		

Item No.	Description
U000	

No.	Items	Description
(7) cont.	Paper Jam Log	4012: Registration sensor stay jam (cassette 2) 4013: Registration sensor stay jam (cassette 3) 4201: Eject sensor non arrival jam (cassette 1) 4202: Eject sensor non arrival jam (cassette 2) 4203: Eject sensor non arrival jam (cassette 3) 4208: Eject sensor non arrival jam (duplex) 4209: Eject sensor non arrival jam (Mp tray) 4211: Eject sensor stay jam (cassette 1) 4212: Eject sensor stay jam (cassette 2) 4213: Eject sensor stay jam (cassette 3) 4218: Eject sensor stay jam (duplex) 4219: Eject sensor stay jam (MP tray) 4301: Duplex sensor non arrival jam (cassette 1) 4302: Duplex sensor non arrival jam (cassette 2) 4303: Duplex sensor non arrival jam (cassette 3) 4309: Duplex sensor non arrival jam (MP tray) 4311: Duplex sensor stay jam (cassette 1) 4312: Duplex sensor stay jam (cassette 2) 4313: Duplex sensor stay jam (cassette 3) 4319: Duplex sensor stay jam (MP tray) 4901: Bridge conveying sensor 1 non arrival jam (cassette 1) 4902: Bridge conveying sensor 1 non arrival jam (cassette 2) 4903: Bridge conveying sensor 1 non arrival jam (cassette 3) 4908: Bridge conveying sensor 1 non arrival jam (duplex) 4909: Bridge conveying sensor 1 non arrival jam (MP tray) 4911: Bridge conveying sensor 1 stay jam (cassette 1) 4912: Bridge conveying sensor 1 stay jam (cassette 2) 4913: Bridge conveying sensor 1 stay jam (cassette 3) 4918: Bridge conveying sensor 1 stay jam (duplex) 4919: Bridge conveying sensor 1 stay jam (MP tray) 5001: Bridge conveying sensor 3 non arrival jam (cassette 1) 5002: Bridge conveying sensor 3 non arrival jam (cassette 2) 5003: Bridge conveying sensor 3 non arrival jam (cassette 3) 5008: Bridge conveying sensor 3 non arrival jam (duplex) 5009: Bridge conveying sensor 3 non arrival jam (MP tray) 5011: Bridge conveying sensor 3 stay jam (cassette 1) 5012: Bridge conveying sensor 3 stay jam (cassette 2) 5013: Bridge conveying sensor 3 stay jam (cassette 3) 5018: Bridge conveying sensor 3 stay jam (duplex) 5019: Bridge conveying sensor 3 stay jam (MP tray) 6023: Staple cover open 6043: DF top cover open6103: DF paper conveying sensor non arrival jam 6113: DF paper conveying sensor stay jam 6123: DF paper conveying sensor remaining jam 6413: DF eject paper sensor stay jam 6423: DF eject paper sensor remaining jam 6803: Front adjustment plate operation ON error

Item No.	Description
U000	

No.	Items	Description		
(7) cont.	Paper Jam Log	6813: Front adjustment plate operation OFF error 6903: Rear adjustment plate operation ON error 6913: Rear adjustment plate operation OFF error 7013: Staple operation error 7023: Staple initial operation error 7913: Sequence error 1 (operation prohibited) 7923: Sequence error 2 (initialoperation error) 7933: Sequence error 3 (Error in the reception of backup data) 7943: Sequence error 4 (standby) 7953: Sequence error 5 (Error in between copies) 9000: No original feed 9001: DP original conveying jam 9004: DP original swichback jam 9010: DP open 9011: DP top cover open 9110: DP paper feed sensor stay jam 9200: DP registration sensor non arrival jam 9400: DP timing sensor non arrival jam 9410: DP timing sensor stay jam		
		(b) Detail of paper source (Hexadecimal)		
		00: MP tray 01: Cassette 1 02: Cassette 2 (paper feeder 1) 03: Cassette 3 (paper feeder 2) 04 to 09: Reserved		
		(c) Detail of paper size (Hexadecimal)		
		00: (Not specified) 01: Monarch 02: Business 03: International DL 04: International C5 05: Executive 06: Letter-R 86: Letter-E 07: Legal 08: A4R 88: A4E 09: B5R 89: B5E 0A: A3	0B: B4 0C: Ledger 0D: A5R 0E: A6 0F: B6 10: Commercial #9 11: Commercial #6 12: ISO B5 13: Custom size 1E: C4 1F: Postcard 20: Reply-paid post-card 21: Oficio II	22: Special 1 23: Special 2 24: A3 wide 25: Ledger wide 26: Full bleed paper (12 x 8) 27: 8K 28: 16K-R A8: 16K-E 32: Statement-R B2: Statement-E 33: Folio 34: Western type 2 35: Western type 4

Item No.	Description
U000	

No.	Items	Description		
(7) cont.	Paper Jam Log	(d) Detail of paper type (Hexadecimal)		
		01: Plain 02: Transparency 03: Preprinted 04: Labels 05: Bond 06: Recycled 07: Vellum 08: Rough 09: Letterhead	0A: Color 0B: Prepunched 0C: Envelope 0D: Cardstock 0E: Coated 0F: 2nd side 10: Media 16 11: High quality	15: Custom 1 16: Custom 2 17: Custom 3 18: Custom 4 19: Custom 5 1A: Custom 6 1B: Custom 7 1C: Custom 8
		(e) Detail of paper eject location (Hexadecimal)		
		01: Face down (FD) 02: Face up (FU)/Document finisher face up (FU)/ 03: Document finisher face down (FD)		
(8)	Service Call Log	#	Count.	Service Code
		Remembers 1 to 8 of occurrence of self diagnostics error. If the occurrence of the previous diagnostics error is less than 8, all of the diagnostics errors are logged.	The total page count at the time of the self diagnostics error.	Self diagnostic error code (See page 1-4-9) Example: 01.6000 01: Self diagnostic error 6000: Self diagnostic error code number
(9)	Maintenance Log	#	Count.	Item
		Remembers 1 to 8 of occurrence of replacement. If the occurrence of the previous replacement of toner container is less than 8, all of the occurrences of replacement are logged.	The total page count at the time of the replacement of the toner container.	Code of maintenance replacing item (1 byte, 2 categories) First byte (Replacing item) 01: Toner container Second byte (Type of replacing item) 00: Black First byte (Replacing item) 02: Maintenance kit Second byte (Type of replacing item) 01: MK-895A 02: MK-895B

Item No.	Description
U000	

No.	Items	Description		
(10)	Unknown Toner Log	#	Count.	Item
		Remembers 1 to 5 of occurrence of unknown toner detection. If the occurrence of the previous unknown toner detection is less than 5, all of the unknown toner detection are logged.	The total page count at the time of the toner empty error with using an unknown toner container.	Unknown toner log code (1 byte, 2 categories) First byte 01: Toner container (Fixed) Second byte 00: Black
(11)	Counter Log Comprised of three log counters including paper jams, self diagnostics errors, and replacement of the toner container.	(f) Paper jam	(g) Self diagnostic error	(h) Maintenance item replacing
		Indicates the log counter of paper jams depending on location. Refer to Paper Jam Log. All instances including those are not occurred are displayed.	Indicates the log counter of self diagnostics errors depending on cause. (See page 1-3-9) Example: C6000: 4 Self diagnostics error 6000 has happened four times.	Indicates the log counter depending on the maintenance item for maintenance. T: Toner container 00: Black M: Maintenance kit 01: MK-477/475/479 Example: T00: 1 The toner container has been replaced once.

Item No.	Description
U002	**Setting the factory default data** **Description** Restores the machine conditions to the factory default settings. **Purpose** To move the mirror frame of the scanner to the position for transport **Method** 1. Press the start key. 2. Select [Mode1(All)]. 3. Press the start key. The mirror frame of the scanner returns to the position for transport. 4. Turn the main power switch off and on. * : An error code is displayed in case of an initialization error. When errors occurred, turn main power switch off then on, and execute initialization using maintenance item U002. **Error codes** Codes: 0001 — Entity error Codes: 0002 — Controller error Codes: 0020 — Engine error Codes: 0040 — Scanner error

Item No.	Description
U004	**Setting the machine number** **Description** Sets or displays the machine number. **Purpose** To check or set the machine number. **Method** 1. Press the start key. If the machine serial number of engine PWB matches with that of main PWB **Display** / **Description** Machine No. / Displays the machine serial number If the machine serial number of engine PWB does not match with that of main PWB **Display** / **Description** Machine No.(Main) / Displays the machine serial number of main Machine No.(Eng) / Displays the machine serial number of engine **Setting** Carry out if the machine serial number does not match. 1. Select [Execute]. 2. Press the start key. Writing of serial No. starts. 3. Turn the main power switch off and on. **Completion** Press the stop key. The screen for selecting a maintenance item No. is displayed.

Item No.	Description
U019	**Displaying the ROM version** **Description** Displays the part number of the ROM fitted to each PWB. **Purpose** To check the part number or to decide, if the newest version of ROM is installed. **Method** 1. Press the start key. The ROM version are displayed. 2. Change the screen using the cursor up/down keys.

Display	Description
Main	Main ROM
MMI	Operation ROM
Engine	Engine ROM
Engine Boot	Engine booting
RFID	RFID ROM
IO CPU	IO CPU ROM
IO CPU Boot	IO CPU booting
Option Language	Optional language ROM
Dictionary	-
DP	Document processor ROM
DP Boot	Document processor booting
PF	Paper feeder ROM
PF Boot	Paper feeder booting
DF	Document finisher ROM
DF Boot	Document finisher booting
AK	Bridge ROM
AK Boot	Bridge booting
Fax APL	Fax control PWB APL
Fax Boot	Fax control PWB booting
Fax IPL	Fax control PWB IPL

Completion
Press the stop key. The screen for selecting a maintenance item No. is displayed.

Item No.	Description
U021	**Memory initializing** **Description** Initializes all settings, except those pertinent to the type of machine, namely each counter, service call history and mode setting. Also initializes backup RAM according to region specification selected in maintenance item U252 Setting the destination. **Purpose** To return the machine settings to their factory default. **Method** 1. Press the start key. 2. Select [Execute]. 3. Press the start key. All data other than that for adjustments due to variations between machines is initialized based on the destination setting. 4. Turn the main power switch off and on. * : An error code is displayed in case of an initialization error. When errors occurred, turn main power switch off then on, and execute initialization using maintenance item U021. **Error codes** Codes: 0001 — Entity error Codes: 0002 — Controller error Codes: 0020 — Engine error Codes: 0040 — Scanner error

Item No.	Description
U030	**Checking the operation of the motors** **Description** Drives each motor. **Purpose** To check the operation of each motor. **Method** 1. Press the start key. 2. Select the motor to be operated. 3. Press the start key. The operation starts. 4. To stop operation, press the stop key. **Completion** Press the stop key. The screen for selecting a maintenance item No. is displayed.

Display	Description
Feed	Conveying motor (CM) is turned on
Exit(CW)	Eject motor (EM) is turned on clockwise
Exit(CCW)	Eject motor (EM) is turned on counterclockwise
Drum K	Drum motor K (DRM-K) is turned on
Drum COL	Drum motor YCM (DRM-YCM) is turned on
Drum K(CW)	Drum motor K (DRM-K) is turned on clockwise
Drum K(CCW)	Drum motor K (DRM-K) is turned on counterclockwise
Drum COL(CW)	Drum motor YCM (DRM-YCM) is turned on clockwise
Drum COL(CCW)	Drum motor YCM (DRM-YCM) is turned on counterclockwise

Item No.	Description
U031	**Checking switches and sensors for paper conveying**

Description
Displays the on-off status of each paper detection switch or sensor on the paper path.
Purpose
To check if the switches and sensors for paper conveying operate correctly.

Method
1. Press the start key.
2. Turn each switch or sensor on and off manually to check the status.
   When a switch or sensor is detected to be in the ON position, the display for that switch or sensor will be “1”.

Display	Switches and sensors
Switch 00000000	
1st digit	Euser pre sensor (FUPS)
2nd digit	Bridge detection switch (BRDSW)
3rd digit	Job paper full sensor (JPFS)
4th digit	Paper full sensor (PFS)
5th digit	Feed sensor (FS)
6th digit	Duplex sensor (DUS)
7th digit	Eject sensor (ES)
8th digit	Registration sensor (RS)

Completion
Press the stop key. The screen for selecting a maintenance item No. is displayed.

Item No.	Description
U032	**Checking the operation of the clutches** **Description** Turns each clutch on. **Purpose** To check the operation of each clutch. **Method** 1. Press the start key. 2. Select the clutch to be operated. 3. Press the start key. The operation starts. Display / Description: Feed — Paper feed clutch (PFCL) is turned on Regist — Registration clutch (RCL) is turned on Duplex — Duplex clutch (DUCL) is turned on Middle — Middle clutch (MCL) is turned on DLP — Developer stop clutch (DEVSCL) is turned on 4. Press the stop key. **Completion** Press the stop key. The screen for selecting a maintenance item No. is displayed.
U033	**Checking the operation of the solenoids** **Description** Turns each solenoid on. **Purpose** To check the operation of each solenoid. **Method** 1. Press the start key. 2. Select the solenoid to be operated. 3. Press the start key. The operation starts. Display / Description: MPT — MP solenoid (MPSOL) is turned on Eject — Feedshift solenoid (FSSOL) is turned on 4. Press the stop key. **Completion** Press the stop key. The screen for selecting a maintenance item No. is displayed.

Item No.	Description
U034	**Adjusting the print start timing** **Description** Adjusts the leading edge registration or center line. **Purpose** Make the adjustment if there is a regular error between the leading edges of the copy image and original. Make the adjustment if there is a regular error between the center lines of the copy image and original. **Method** 1. Press the start key. 2. Select the item to be adjusted.

Display	Description
LSU Out Top	Leading edge registration adjustment
LSU Out Left	Center line adjustment

Adjustment: Leading edge registration adjustment

1. Press the system menu key.
2. Press the start key to output a test pattern.
3. Press the system menu key.
4. Select the item to be adjusted.

Display	Description	Setting range	Initial setting	Change in value per step
MPT(L)	Paper feed from MP tray (when large size paper is used)	-128 to 127	0	0.1 mm
Cassette(L)	Paper feed from cassette (when large size paper is used)	-128 to 127	0	0.1 mm
Duplex(L)	Duplex mode (second) (when large size paper is used)	-128 to 127	0	0.1 mm

Large size: 218 mm or more in width of paper.

Item No.	Description
U034	

5. Change the setting value using the cursor left/right keys or numeric keys.
   For output example 1, increase the value. For output example 2, decrease the value.

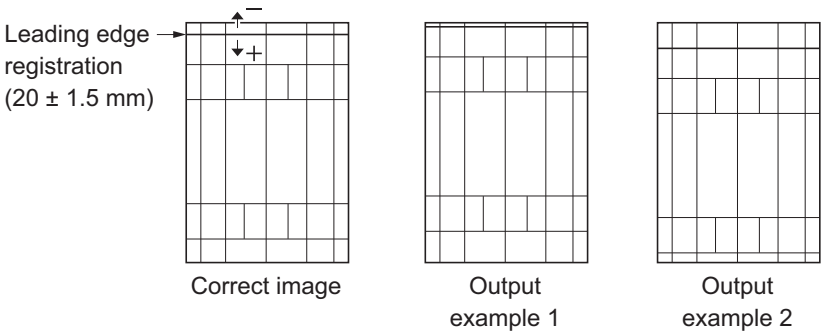

Figure 1-3-2

6. Press the start key. The value is set.

Remark
Changing the larger sizes settings affects those for the smaller sizes.

Caution
Check the copy image after the adjustment. If the image is still incorrect, perform the following adjustments in maintenance mode.

U034 → U066 (P.1-3-31) → U071 (P.1-3-36)

Adjustment: Center line adjustment
1. Press the system menu key.
2. Press the start key to output a test pattern.
3. Press the system menu key.
4. Select the item to be adjusted.

Display	Description	Setting range	Initial setting	Change in value per step
MPT	Paper feed from MP tray	-128 to 127	0	0.1 mm
Cassette1	Paper feed from cassette 1	-128 to 127	0	0.1 mm
Cassette2	Paper feed from optional cassette 2	-128 to 127	0	0.1 mm
Cassette3	Paper feed from optional cassette 3	-128 to 127	0	0.1 mm
Duplex	Duplex mode (second)	-128 to 127	0	0.1 mm

Item No.	Description
U034	5. Change the setting value using the cursor left/right keys or numeric keys. For output example 1, increase the value. For output example 2, decrease the value. 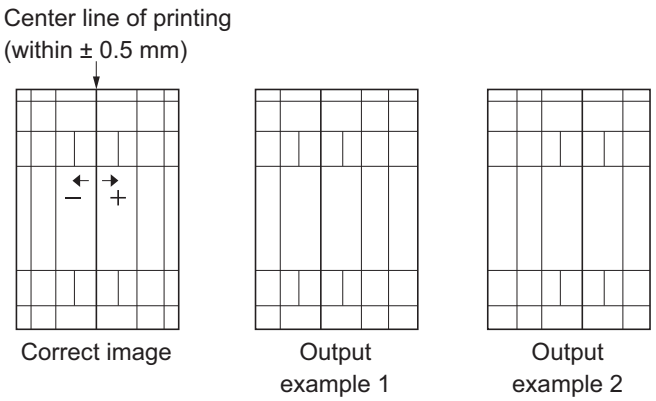 **Figure 1-3-3** 6. Press the start key. The value is set. **Caution** Check the copy image after the adjustment. If the image is still incorrect, perform the following adjustments in maintenance mode. U034 → U067 (P.1-3-32) → U072 (P.1-3-38) **Completion** Press the stop key. The screen for selecting a maintenance item No. is displayed.

Item No.	Description
U035	**Setting the printing area for folio paper** **Description** Changes the printing area for copying on folio paper. **Purpose** To prevent cropped images on the trailing edge or left/right side of copy paper by setting the actual printing area for folio paper. **Setting** 1. Press the start key. 2. Select the item to be set. 3. Change the setting value using the cursor left/right keys. **Display** / **Description** / **Setting range** / **Initial setting** Length / Length / 330 to 356 mm / 330 Width / Width / 200 to 220 mm / 210 4. Press the start key. The value is set. **Completion** Press the stop key. The screen for selecting a maintenance item No. is displayed.
U037	**Checking the operation of the fan motors** **Description** Drives each fan motor. **Purpose** To check the operation of each fan motor. **Method** 1. Press the start key. 2. Select the fan motor to be operated. 3. Press the start key. The operation starts. **Display** / **Description** All / All fan motors are turned on Low Power / Power source fan motor (PSFM) is turned on Container / Container fan motor (CFM) is turned on IH Coil / IH Coil fan motor (IHCFM) is turned on LSU Cooling / LSU Cooling fan motor (LSUFM) is turned on IH Edge / IH fan motor (IHFM) is turned on To stop operation, press the stop key. **Completion** Press the stop key. The screen for selecting a maintenance item No. is displayed.

Item No.	Description
U051	**Adjusting the deflection in the paper**

Description
Adjusts the deflection in the paper at the registration roller.
Purpose
Make the adjustment if the leading edge of the copy image is missing or varies randomly, or if the copy paper is Z-folded.

Adjustment
1. Press the start key.
2. Press the system menu key.
3. Place an original and press the start key to make a test copy.
4. Press the system menu key.
5. Select the item to be adjusted.

Display	Description	Setting range	Initial setting
MPT	Paper feed from MP tray	-30 to 20	0
Cassette	Paper feed from cassette 1	-30 to 20	0
PF	Paper feed from paper feeder	-30 to 20	0
Duplex	Duplex mode (second)	-30 to 20	0

6. Change the setting value using the cursor left/right keys or numeric keys.
   For output example 1, increase the value. For output example 2, decrease the value.
   The greater the value, the larger the deflection; the smaller the value, the smaller the deflection.

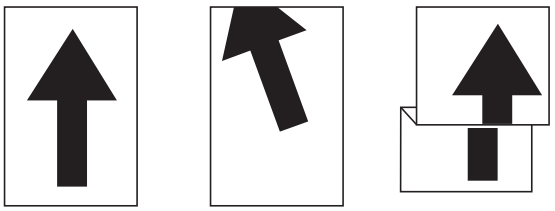

Figure 1-3-4

7. Press the start key. The value is set.

Completion
Press the stop key. The indication for selecting a maintenance item No. appears.

Item No.	Description
U053	**Setting the adjustment of the motor speed**

Description
Performs fine adjustment of the speeds of the motors.
Purpose
To adjust the speed of the respective motors when the magnification is not correct.

Method
1. Press the start key.
2. Select the item to be adjusted.

Display	Description	Setting range	Initial setting
Feed	Conveying motor (CM) speed adjustment	-50 to 50	-
Exit	Eject motor (EM) speed adjustment	-40 to 40	0
Drum(CMY)	Drum motor (DRM-YCM) speed adjustment	-50 to 50	5
Drum(K)	Drum motor (DRM-K) speed adjustment	-50 to 50	5
DLP(CMY)	DLP motor (DEVM-YCM) speed adjustment	-50 to 50	0
DLP(K)	DLP motor (DEVM-K) speed adjustment	-50 to 50	5
Fixing	Fixing motor(FUM) speed adjustment	-50 to 50	10
Porygon(CMY)	Porygon motor(PM-YCM) speed adjustment	-20 to 20	0
Porygon(K)	Porygon motor (PM-K) speed adjustment	-20 to 20	0

Item No.	Description
U053	**Adjustment** 1. Press the system menu key. 2. Press the start key to output an A3/Ledger VTC pattern. 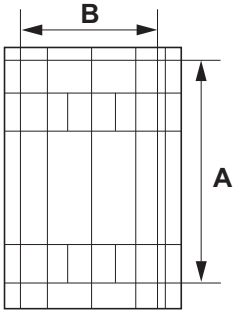 Correct values for an A3/Ledger output are: A = 350 ± 1.4 mm B = 250 ± 1.0 mm **Figure 1-3-5** 3. Press the system menu key. 4. A: Magnification in the auxiliary scanning direction 1) Select [Main]. 2) Change the setting value using the cursor left/right keys or numeric keys. Increasing the setting makes the image longer in the auxiliary scanning direction, and decreasing it makes the image shorter in the auxiliary scanning direction. B: Magnification in the main scanning direction 1) Select [Polygon]. 2) Change the setting value using the cursor left/right keys or numeric keys. Increasing the setting makes the image shorter in the main scanning direction, and decreasing it makes the image longer in the main scanning direction. 5. Press the start key. The value is set. **Completion** Press the stop key. The indication for selecting a maintenance item No. appears.

Item No.	Description
U063	**Adjusting the shading position**

Description
Changes the shading position of the scanner.
Purpose
Used when the white line continue to appear longitudinally on the image after the shading plate is cleaned.
This is due to flaws or stains inside the shading plate. To prevent this problem, the shading position should be changed so that shading is possible without being affected by the flaws or stains.

Setting
1. Press the start key.
2. Select [Position].
3. Change the setting value using the cursor left/right keys or numeric keys.

Display	Description	Setting range	Initial setting	Change in value per step
Position	Shading position	-6 to 18	0	0.091 mm

Increasing the value moves the shading position toward the machine left, and decreasing it moves the position toward the machine right.
4. Press the start key. The value is set.

Supplement
While this maintenance item is being executed, copying from an original is available in interrupt copying mode (which is activated by pressing the system menu key).

Completion
Press the stop key. The screen for selecting a maintenance item No. is displayed.

Item No.	Description
U065	**Adjusting the scanner magnification**

Description
Adjusts the magnification of the original scanning.
Purpose
Make the adjustment if the magnification in the main scanning direction is incorrect.
Make the adjustment if the magnification in the auxiliary scanning direction is incorrect.

Caution
Adjust the magnification of the scanner in the following order.

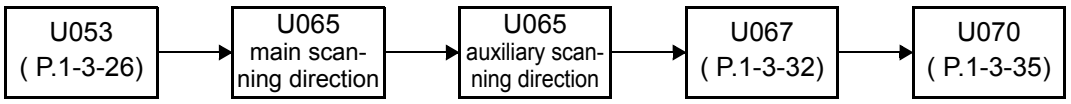

Method
1. Press the start key.
2. Press the system menu key.
3. Place an original and press the start key to make a test copy.
4. Press the system menu key.
5. Select the item to be adjusted.

Display	Description	Setting range	Initial setting	Change in value per step
Y Scan Zoom	Scanner magnification in the main scanning direction	-75 to 75	0	0.02 %
X Scan Zoom	Scanner magnification in the auxiliary scanning direction	-125 to 125	0	0.02 %

Adjustment: [Y Scan Zoom]
1. Change the setting value using the cursor left/right keys or numeric keys.
   For copy example 1, increase the value. For copy example 2, decrease the value.

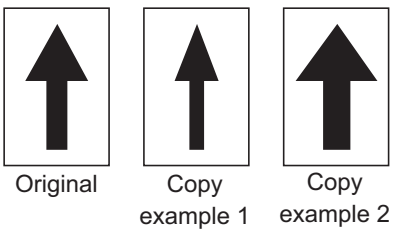

Figure 1-3-6

2. Press the start key. The value is set.

Item No.	Description
U065	**Adjustment: [X Scan Zoom]** 1. Change the setting value using the cursor left/right keys or numeric keys. For copy example 1, increase the value. For copy example 2, decrease the value. 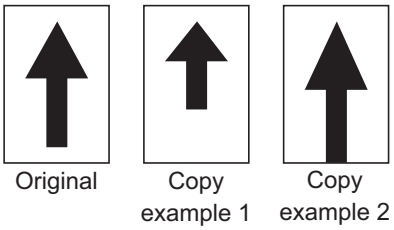 **Figure 1-3-7** 2. Press the start key. The value is set. **Completion** Press the stop key. The screen for selecting a maintenance item No. is displayed.

Item No.	Description
U066	**Adjusting the scanner leading edge registration**

Description
Adjusts the scanner leading edge registration of the original scanning.
Purpose
Make the adjustment if there is a regular error between the leading edges of the copy image and original.

Adjustment
1. Press the start key.
2. Press the system menu key.
3. Place an original and press the start key to make a test copy.
4. Press the system menu key.
5. Select the item to be adjusted.

Display	Description	Setting range	Initial setting	Change in value per step
Front	Scanner leading edge registration	-45 to 45	0	0.091 mm
Rotate	Scanner leading edge registration (rotate copying)	-45 to 45	0	0.100mm

6. Change the setting value using the cursor left/right keys or numeric keys.
   For copy example 1, increase the value. For copy example 2, decrease the value.

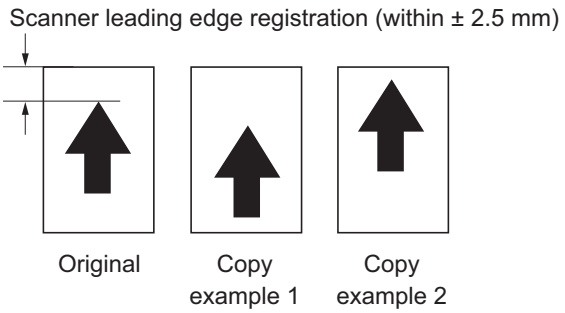

Figure 1-3-8

7. Press the start key. The value is set.

Caution
Check the copy image after the adjustment. If the image is still incorrect, perform the following adjustments in maintenance mode.

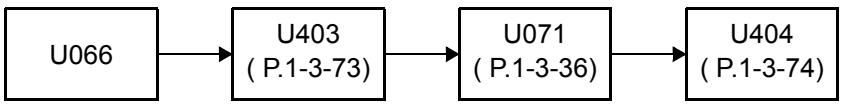

Completion
Press the stop key. The screen for selecting a maintenance item No. is displayed.

Item No.	Description
U067	**Adjusting the scanner center line**

Description
Adjusts the scanner center line of the original scanning.
Purpose
Perform this adjustment if there is a unmatching error between the center lines of the copy image and original.

Adjustment
1. Press the start key.
2. Press the system menu key.
3. Place an original and press the start key to make a test copy.
4. Press the system menu key.
5. Select the item to be adjusted.l

Display	Description	Setting range	Initial setting	Change in value per step
Front	Scanner center line	-40 to 40	0	0.085 mm
Rotate	Scanner center line (rotate copying)	-40 to 40	0	0.085 mm

6. Change the setting value using the cursor left/right keys or numeric keys.
   For copy example 1, increase the value. For copy example 2, decrease the value.

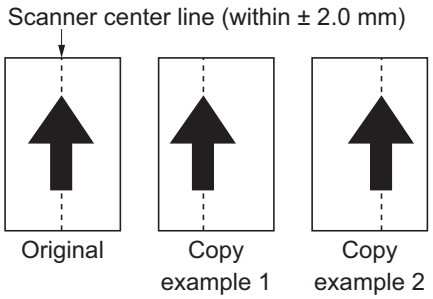

Figure 1-3-9

7. Press the start key. The value is set.

Caution
Check the copy image after the adjustment. If the image is still incorrect, perform the following adjustments in maintenance mode.

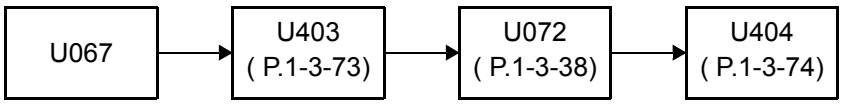

Completion
Press the stop key. The screen for selecting a maintenance item No. is displayed.

Item No.	Description
U068	**Adjusting the scanning position for originals from the DP**

Description
Adjusts the position for scanning originals from the DP. Performs the test copy at the four scanning positions after adjusting.
Purpose
Used when the image fogging occurs because the scanning position is not proper when the DP is used. Run U071 to adjust the timing of DP leading edge when the scanning position is changed.

Setting
1. Press the start key.l

Display	Description	Setting range	Initial setting	Change in value per step
DP Read	Starting position adjustment for scanning originals	-55 to 55	0	0.091 mm
Black Line	Scanning position for the test copy originals	0 to 3	0	-

2. Select [DP Read].
3. Change the setting using the cursor left/right keys or numeric keys.
   When the setting value is increased, the scanning position moves to the right and it moves to the left when the setting value is decreased.
4. Press the start key. The value is set.
5. Select [Black Line].
6. Change the setting using the cursor left/right keys or numeric keys.
7. Press the start key. The value is set.
8. Set the original (the one which density is known) in the DP and press the system menu key.
9. Press the start key. Test copy is executed.
10. Perform the test copy at each scanning position with the setting value from 0 to 3 and check that no black line appears and the image is normally scanned.

Completion
Press the stop key. The screen for selecting a maintenance item No. is displayed.

Item No.	Description
U070	**Adjusting the DP magnification**

Description
Adjusts the DP original scanning speed.
Purpose
Perform this adjustment if the magnification is incorrect in the auxiliary scanning direction when the DP is used.

Adjustment
1. Press the start key.
2. Press the system menu key.
3. Place an original on the DP and press the start key to make a test copy.
4. Press the system menu key.
5. Select the item to be adjusted.l

Display	Description	Setting range	Initial setting	Change in value per step
Y Scan Zoom	Magnification in the main scanning direction	-125 to 125	0	0.02 %
X Scan Zoom	Magnification in the auxiliary scanning direction	-125 to 125	0	0.02 %

Adjustment: [Y Scan Zoom]
1. Change the setting value using the cursor left/right keys or numeric keys.
   For copy example 1, increase the value. For copy example 2, decrease the value.

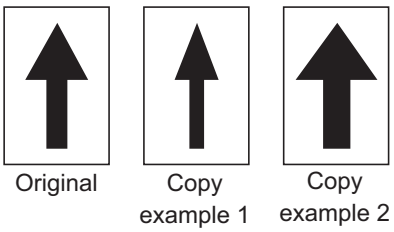

Figure 1-3-10

Item No.	Description
U070	2. Press the start key. The value is set. **Adjustment: [X Scan Zoom]** 1. Change the setting value using the cursor left/right keys or numeric keys. For copy example 1, increase the value. For copy example 2, decrease the value. 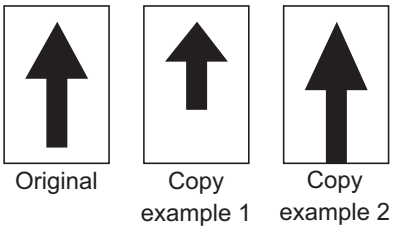 **Figure 1-3-11** 2. Press the start key. The value is set. **Caution** Check the copy image after the adjustment. If the image is still incorrect, perform the following adjustments in maintenance mode. 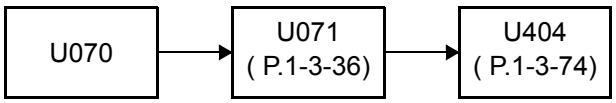 **Completion** Press the stop key. The screen for selecting a maintenance item No. is displayed.

Item No.	Description
U071	**Adjusting the DP scanning timing**

Description
Adjusts the DP original scanning timing.
Purpose
Make the adjustment if there is a regular error between the leading or trailing edges of the original and the copy image when the DP is used.

Method
1. Press the start key.
2. Press the system menu key.
3. Place an original on the DP and press the start key to make a test copy.
4. Press the system menu key.
5. Select the item to be adjusted.l

Display	Description	Setting range	Initial setting	Change in value per step
Front Head	Leading edge registration (first side)	-80 to 80	0	0.119 mm
Front Tail	Trailing edge registration (first side)	-80 to 80	0	0.119 mm
Back Head	Leading edge registration (second side)	-80 to 80	0	0.119 mm
Back Tail	Trailing edge registration (second side)	-80 to 80	0	0.119 mm

Adjustment: Leading edge registration
1. Change the setting value using the cursor left/right keys or numeric keys.
   For copy example 1, increase the value. For copy example 2, decrease the value.

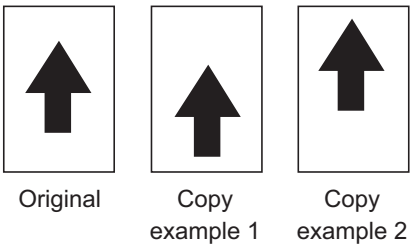

Figure 1-3-12

2. Press the start key. The value is set.

Caution
If the first side is adjusted, check the second side and if adjustment is required, carry out the adjustment.
Check the copy image after the adjustment. If the image is still incorrect, perform the following adjustments in maintenance mode.

U071 → U404 (P.1-3-74)

Item No.	Description
U071	**Adjustment: Trailing edge registration** 1. Change the setting value using the cursor left/right keys or numeric keys. For copy example 1, increase the value. For copy example 2, decrease the value. 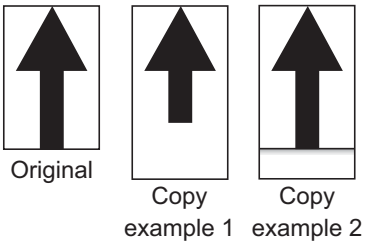 **Figure 1-3-13** 2. Press the start key. The value is set. **Caution** If the first side is adjusted, check the second side and if adjustment is required, carry out the adjustment. Check the copy image after the adjustment. If the image is still incorrect, perform the following adjustments in maintenance mode. U071 → U404 (P.1-3-74) **Completion** Press the stop key. The screen for selecting a maintenance item No. is displayed.

Item No.	Description
U072	**Adjusting the DP center line**

Description
Adjusts the scanning start position for the DP original.
Purpose
Perform the adjustment if there is a regular error between the centers of the original and the copy image when the DP is used.

Adjustment
1. Press the start key.
2. Press the system menu key.
3. Place an original on the DP and press the start key to make a test copy.
4. Press the system menu key.
5. Select the item to be adjusted.l

Display	Description	Setting range	Initial setting	Change in value per step
Front	DP center line (first side)	-80 to 80	0	0.119 mm
Back	DP center line (second side)	-80 to 80	0	0.119 mm

6. Change the setting value using the cursor left/right keys or numeric keys.
   For copy example 1, increase the value. For copy example 2, decrease the value.

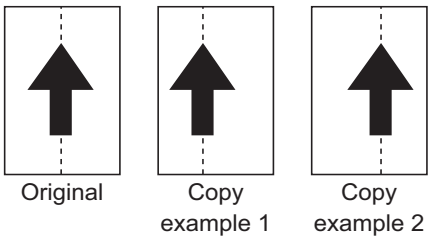

Figure 1-3-14

7. Press the start key. The value is set.

Caution
If the first side is adjusted, check the second side and if adjustment is required, carry out the adjustment.
Check the copy image after the adjustment. If the image is still incorrect, perform the following adjustments in maintenance mode.

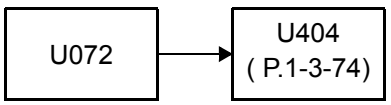

Completion
Press the stop key. The screen for selecting a maintenance item No. is displayed.

Item No.	Description
U074	**Adjusting the DP input light luminosity**

Description
Sets the luminosity correction for scanning originals from the DP.
Purpose
Modify the setting only if a spotted background appears when a bluish original is scanned from the DP.

Setting
1. Press the start key.
2. Change the setting value using the cursor left/right keys or numeric keys.

Display	Description	Setting range	Initial setting
Coefficient	DP input light luminosity correction	0 to 3	0

Settings 0: No correction / 1: Slight correction / 2: Medium correction / 3: Strong correction
3. Press the start key. The value is set.

Supplement
While this maintenance item is being executed, copying from an original is available in interrupt copying mode (which is activated by pressing the system menu key).

Completion
Press the stop key. The screen for selecting a maintenance item No. is displayed.

Item No.	Description
U089	**Outputting a MIP-PG pattern**

Description
Selects and outputs the MIP-PG pattern created in the machine.
Purpose
To check copier status other than scanner when adjusting image printing, using MIP-PG pattern output (with-out scanning).

Method
1. Press the start key.
2. Select the MIP-PG pattern to be output and press the start key.

Display	PG pattern to be output	Purpose
256GRADATION	256-gradation PG	To check the gradation reproducibility
COLOR BELT	Four color belts PG	To check the developing state and the engine section ID
GRAY(C)	Cyan PG	To check the drum quality
GRAY(M)	Magenta PG	To check the drum quality
GRAY(Y)	Yellow PG	To check the drum quality
GRAY(K)	Black PG	To check the drum quality
WHITE	Blank paper PG	To check the drum quality
GRADATION GRAY	5-graduation gray PG	To check for vertical lines on the laser scanner unit

3. Press the system menu key.
4. Press the start key. A MIP-PG pattern is output.

Completion
Press the stop key. The screen for selecting a maintenance item No. is displayed.

Item No.	Description
U099	**Adjusting original size detection**

Description
Checks the operation of the original size sensor and sets the sensing threshold value.
Purpose
To adjust the sensitivity of the sensor and size judgement time if the original size sensor malfunctions frequently due to incident light or the like.

Method
1. Press the start key.
2. Select the item. The screen for executing each item is displayed.

Display	Description
Data1	Displaying original size sensor transmission data
B/W Level1	B/W LEVEL setting original size sensor threshold value Setting original size judgment time
Data2	Displaying original size sensor transmission data (when DP is installed)

Method: [Data1/Data2]
1. Place the original and close the original cover or DP. The detection sensor transmission data is displayed.

Display	Description
Original Area (dot)	Detected original width size (dot)
Original Area (mm)	Detected original width size (mm)
Size SW L	Displays the original size sensor (OSS) ON/OFF

Setting: [B/W Level1]
1. Select an item to be set.
2. Change the setting value using the cursor left/right keys or numeric keys.l

Display	Description	Setting range	Initial setting	
Original 1	Original threshold value	0 to 255	40	50*
Original 2	Original threshold value	0 to 255	30	50*
Original 2	Original threshold value	0 to 255	20	50*
Light Source	Light source threshold value	0 to 255	19	49*

* : When DP is installed.

3. Press the start key. The value is set.

Completion
Press the stop key. The screen for maintenance item No. is displayed.

Item No.	Description
U100	**Setting the main high voltage** **Description** Performs main charging. **Purpose** To check main charging. **Setting: [IDC Bias]** 1. Select an item to be set. 2. Change the setting value using the cursor left/right keys or numeric keys.l

Display	Description	Setting range	Initial setting
1st	Set value of the MC DC bias (Yellow)	0 to 250	145
2nd	Set value of the MC DC bias (Cyan)	0 to 250	145
3rd	Set value of the MC DC bias (Magenta)	0 to 250	145
4th	Set value of the MC DC bias (Black)	0 to 250	145

3. Press the start key. The value is set.

Completion
Press the stop key when main charger output stops. The screen for selecting a maintenance item No. is displayed.

Item No.	Description
U101	**Setting the voltage for the primary transfer**

Description
Sets the control voltage for the primary transfer.
Purpose
To change the setting when any density problems, such as too dark or light, occur.

Method
1. Press the start key.
2. Select the item. The screen for executing each item is displayed.

Display	Description
Base	Standard value
1st side	Correction value of single-side printing
2nd side	Correction value of duplex printing
B/W	Correction value of monochrome printing

Setting: [Base]
1. Select the item to be set.
2. Change the setting value using the cursor left/right keys or numeric keys.

Display	Description	Setting range	Initial setting
Full	Full speed printing	0 to 100	55
Half	Half speed printing	0 to 100	35

3. Press the start key. The value is set.

Setting: [1st side/02nd side]
1. Select the item to be set.
2. Change the setting value using the cursor left/right keys or numeric keys.

Display	Description	Setting range	Initial setting
1st	Correction value (Yellow)	-50 to 50	0/-3
2nd	Correction value (Cyan)	-50 to 50	15/-3
3rd	Correction value (Magenta)	-50 to 50	5/-3
4th	Correction value (Black)	-50 to 50	20/-3

3. Press the start key. The value is set.

Item No.	Description
U101	**Setting: [B/W]** 1. Select the item to be set. 2. Change the setting value using the cursor left/right keys or numeric keys. 3. Press the start key. The value is set. **Completion** Press the stop key. The screen for selecting a maintenance item No. is displayed.

Display	Description	Setting range	Initial setting
Value	Correction value	-50 to 50	10

Item No.	Description
U106	**Setting the voltage for the secondary transfer**

Description
Sets the control voltage for the secondary transfer.
Purpose
To change the setting when any density problems, such as too dark or light, occur.

Method
1. Press the start key.
2. Select the item. The screen for executing each item is displayed.

Display	Description
Color	Correction value of color printing
B/W	Correction value of monochrome printing

Method:[Color]
1. Select the item. The screen for executing each item is displayed.

Display	Description
Light/Normal1	Weight of paper (light to usual 1)
Normal2/3	Weight of paper (usual 2 to 3)
Heavy1	Weight of paper (heavy 1)
Heavy2-3	Weight of paper (heavy 2 to 3)
OHP	Kind of paper (OHP)
Coated	Kind of paper (Coated paper)

Method: [Light/Normal1 / Normal2/3 / Heavy1 / Heavy2-3]
1. Select the item. The screen for executing each item is displayed.

Display	Description
1st side	Correction value of single-side printing
2nd side	Correction value of duplex printing

Setting:[1st side/2nd side]
1. Select the item to be set.
2. Change the setting value using the cursor left/right keys or numeric keys.

Display	Description	Setting range	Initial setting
Width<160	width of paper<160	0 to 200	60/60/45/40 80/82/55/40
160<=Width<220	160<= width of paper <220	0 to 200	53/55/41/35 47/52/39/32
220<=Width	220<= width of paper	0 to 200	45/48/38/30 43/45/35/27

3. Press the start key. The value is set.

Item No.	Description
U106	

Setting:[OHP/Coated]

1. Select the item to be set.
2. Change the setting value using the cursor left/right keys or numeric keys.

Display	Description	Setting range	Initial setting
Width<160	width of paper<160	0 to 200	35/45
160<=Width<220	160<= width of paper <220	0 to 200	35/35
220<=Width	220<= width of paper	0 to 200	25/30

3. Press the start key. The value is set.

Method:[B/W]

1. Select the item. The screen for executing each item is displayed.

Display	Description
Light/Normal1	Weight of paper (light to usual 1)
Heavy1	Weight of paper (heavy 1)
Heavy2-3	Weight of paper (heavy 2 to 3)

Method: [Light/Normal1 / Heavy1 / Heavy2-3]

1. Select the item. The screen for executing each item is displayed.

Display	Description
1st side	Correction value of single-side printing
2nd side	Correction value of duplex printing

Setting:[1st side/2nd side]

1. Select the item to be set.
2. Change the setting value using the cursor left/right keys or numeric keys.

Display	Description	Setting range	Initial setting
Width<160	width of paper<160	0 to 200	55/45/40 65/55/38
160<=Width<220	160<= width of paper <220	0 to 200	50/41/32 50/40/30
220<=Width	220<= width of paper	0 to 200	40/38/27 3736/25

3. Press the start key. The value is set.

Completion

Press the stop key. The screen for selecting a maintenance item No. is displayed.

Item No.	Description
U107	**Setting the voltage for the intermediate transfer cleaning**

Description
Sets the control voltage for the **intermediate transfer cleaning**.
Purpose
To change the setting when the offset by a defective cleaning of the transfer belt is generate.

Method
1. Press the start key.
2. Select the item. The screen for executing each item is displayed.

Display	Description
Belt(A)	Correction value of belt A
Belt(B)	Correction value of belt B
Belt(C)	Correction value of belt C

Setting
1. Select the item to be set.
2. Change the setting value using the cursor left/right keys or numeric keys.

Display	Description	Setting range	Initial setting
Full	Full speed printing of color	0 to 200	-
Half	Half speed printing of color	0 to 200	-
3/4	75% of full speed printing of color	0 to 200	-
B/W Full	Full speed printing of monochrome	0 to 200	-
B/W Half	Half speed printing of monochrome	0 to 200	-
B/W 3/4	75% of full speed printing of monochrome	0 to 200	-

3. Press the start key. The value is set.

Completion
Press the stop key. The screen for selecting a maintenance item No. is displayed.

Item No.	Description
U108	**Setting separation shift bias**

Description
Adjusts output of separation shift bias and ON/OFF timing.
Purpose
To set when the separated malfunction of the paper occurs.

Method
1. Press the start key.
2. Select the item. The screen for executing each item is displayed.

Display	Description
Light/Normal1	Weight of paper (light to usual 1)
Normal2/3	Weight of paper (usual 2 to 3)
Heavy1	Weight of paper (heavy 1)
Coated	Kind of paper (Coated paper)
Timing	Setting of the separation timing

Method
1. Select the item. The screen for executing each item is displayed.

Display	Description
1st side	Correction value of single-side printing
2nd side	Correction value of duplex printing

Setting
1. Select the item to be set.
2. Change the setting value using the cursor left/right keys or numeric keys.

Display	Description	Setting range	Initial setting
Add Normal Lead	for the leading edge on paper	0 to 20	-
On Timing 1	Adjustment of the ON Timing 1	-100 to 100	-
On Timing 2	Adjustment of the ON Timing 2	-100 to 100	-
Off Timing	Adjustment of the OFF Timing	-100 to 100	-

3. Press the start key. The value is set.

Completion
Press the stop key. The screen for selecting a maintenance item No. is displayed.

Item No.	Description
U111	**Checking the drum drive time** **Description** Displays the drum drive time for checking a figure, which is used as a reference when correcting the high voltage based on time. **Purpose** To check the drum status. **Method** 1. Press the start key. 2. Select the item. The drum drive time is displayed. **Setting** 1. Change the drum drive time using the cursor left/right keys or numeric keys. 2. Press the start key. The drum drive time is set. **Completion** Press the stop key. The screen for selecting a maintenance item No. is displayed.

Display	Description
C	Cyan drum drive time
M	Magenta drum drive time
Y	Yellow drum drive time
K	Black drum drive time

Item No.	Description
U118	**Displaying the drum history** **Description** Displays the past record of machine number and the drum counter. **Purpose** To check the count value of machine number and the drum counter. **Method** 1. Press the start key. The each history displayed by five cases. **Display** / **Description** C — Cyan drum past record M — Magenta drum past record Y — Yellow drum past record K — Black drum past record 2. The history of a machine number and a drum counter for each color is displayed by three cases.T **Display** / **Description** Machine History 1 - 3 — Historical records of the machine number Cnt History 1 - 3 — Historical records of drum counter **Completion** Press the stop key. The screen for selecting a maintenance item No. is displayed.
U123	**Displaying the transfer belt unit history** **Description** Displays the past record of machine number and the transfer belt unit counter. **Purpose** To check the count value of machine number and the transfer counter. **Method** 1. Press the start key. The history of a machine number and a transfer belt unit counter for each color is displayed by three cases. **Display** / **Description** Machine History 1 - 3 — Historical records of the machine number Count History 1 - 3 — Historical records of transfer belt unit counter **Completion** Press the stop key. The screen for selecting a maintenance item No. is displayed.

<table>
<tr><th>Item No.</th><th>Description</th></tr>
<tr><td>U127</td><td>

Checking/clearing the transfer count

Description
Displays and clears the counts of the transfer counter.
Purpose
To check the count after replacement of the transfer belt unit or transfer roller. Also to clear the counts after replacing transfer roller.

Method
1. Press the start key. The current counts of the transfer counter is displayed.

<table>
<tr><th>Display</th><th>Description</th></tr>
<tr><td>Mid Trans</td><td>Transfer belt unit counter value</td></tr>
<tr><td>2nd Trans</td><td>Transfer roller counter value</td></tr>
<tr><td>Cnt</td><td>Transfer counter value</td></tr>
</table>

Clearing
1. Select [Clear].
2. Press the start key. The counter value is cleared.

Setting
1. Change the counter value using the cursor left/right keys or numeric keys.
2. Press the start key. The counter value is set.

Completion
Press the stop key. The screen for selecting a maintenance item No. is displayed.

</td></tr>
<tr><td>U135</td><td>

Checking toner motor operation

Description
Drives toner motors.
Purpose
To check the operation of toner motors.

Remarks
When driving the toner motors long time or several times, developing section becomes the toner full and is locked.

Method
1. Press the start key.
2. Select [Toner].
3. Press the start key. The operation starts.

Completion
Press the stop key after operation stops. The screen for selecting a maintenance item No. is displayed.

</td></tr>
</table>

Item No.	Description
U136	**Setting toner near end detection** **Description** Sets the level that indicates the number of sheets that can be printed from occurrence of toner near end to toner empty. **Purpose** To change the setting to advance detection of near end if the interval from toner near end to toner empty seems too short. **Setting** 1. Press the start key. 2. Select the item to be set. 3. Change the setting value using the cursor left/right keys or numeric keys. Display / Description / Setting range / Initial setting K / Setting the level of black toner / 0 to 10 / 0 CMY / Setting the level of cyan/magenta/yellow toner / 0 to 10 / 0 Increasing the setting makes the interval from toner near end to toner empty longer. Decreasing the setting makes the interval from toner near end to toner empty shorter. If 0 is set, toner near end will not be detected. 4. Press the start key. The value is set. **Completion** Press the stop key. The screen for selecting a maintenance item No. is displayed.
U139	**Displaying the temperature and humidity outside the machine** **Description** Displays the detected temperature and humidity outside the machine. **Purpose** To check the temperature and humidity outside the machine. **Method** 1. Press the start key. The detected temperature and humidity are displayed. Display / Description External Temperature / External temperature (°C) External Humidity / External humidity (%) Internal Temp1 (LSU) / Internal temperature around the laser scanner unit (°C) Internal Temp2 / Internal temperature around the transfer section (°C) Internal Temp3 / Internal temperature around the developing section (°C) **Completion** Press the stop key. The screen for selecting a maintenance item No. is displayed.

Item No.	Description
U140	**Setting developer bias**

Description
Setting the value of various developer bias.
Purpose
To check and setting the value of developer bias.

Method
1. Press the start key.
2. Select the item to be set or displayed.

Display	Description
Mag DC	Setting the value of magnet DC bias.
Sleeve DC	Setting the value of sleeve DC bias.
Clock Freq	Setting the value of clock frequency.
Clock Duty	Setting the value of clock duty.
AC Ctrl	Setting the value of AC control voltage.
On Timing	Setting the value of developer On timing.
Off Timing	Setting the value of developer Off timing.

Setting: [Mag DC/Sleeve DC/Clock Freq/Clock Duty/AC Ctrl]
1. Select the item to be set.
2. Change the setting value using the cursor left/right keys or numeric keys.

Display	Description	Initial setting
1st	Setting the value of yellow.	450/150/36/27/1400
2nd	Setting the value of cyan.	480/180/36/27/1400
3rd	Setting the value of magenta.	480/180/36/27/1400
4th	Setting the value of black.	450/150/36/27/1400
Remove 1st	Setting the value of remove yellow.	50/150/36/27/1000
Remove 2nd	Setting the value of remove cyan.	50/150/36/27/1000
Remove 3rd	Setting the value of remove magenta.	50/150/36/27/1000
Remove 4th	Setting the value of remove black.	50/150/36/27/1000
Remove 1st Half	Setting the value of remove yellow Half.	350/180/36/27/1200
Remove 2nd Half	Setting the value of remove cyan Half.	350/180/36/27/1200
Remove 3rd Half	Setting the value of remove magenta Half.	350/180/36/27/1200
Remove 4th Half	Setting the value of remove black Half.	350/180/36/27/1200

3. Press the start key. The value is set.

Item No.	Description
U140	**Setting: [On Timing/On Timing]** 1. Select the item to be set. 2. Change the setting value using the cursor left/right keys or numeric keys. 3. Press the start key. The value is set. **Completion** Press the stop key. The screen for selecting a maintenance item No. is displayed.

Display	Description	Setting range	Initial setting
1st	Setting the value of yellowt.	-500 to 500	0/0
2nd	Setting the value of cyan.	-500 to 500	0/0
3rd	Setting the value of magenta.	-500 to 500	0/0
4th	Setting the value of black.	-500 to 500	0/0

U147

Setting for toner applying operation

Description
Sets the mode for removing charged toner in the developer unit (T7 control: Toner applying operation).
Purpose
Changing settings are not required. However, when the documents with lower print density (e.g. less than 2%) should customarily printed in a great volume, mode must be changed.
If the charged toner stays inside the developer unit, density decreases.

Setting
1. Press the start key
2. Select the item to be set.
3. Change the setting value using the cursor left/right keys or numeric keys.

Display	Description	Setting range	Initial setting
T7	T7 Operational mode	0 to 1	0
Drum T7	Drum T7 operational mode	0 to 255	60

4. Press the start key. The setting is set.

Completion
Press the stop key. The screen for selecting a maintenance item No. is displayed.

Item No.	Description
U150	**Checking sensors for toner**

Description
Displays the on-off status of each sensor or switch related to toner.
Purpose
To check if the sensors and switches operate correctly.

Method
1. Press the start key.
2. Select the item. The screen for executing each item is displayed.

Display	Description
T/C	Displays the state of the toner sensor.
Waste Box	Displays the state of the waste toner box.

Method: [T/C]
1. Turn each switch or sensor on and off manually to check the status.
   When a switch or sensor is detected to be in the ON position, the display for that switch or sensor will be “1”

Display	Switches and sensors
T/C Sensor 1st	Displays the state of the toner sensor (Yellow).
T/C Sensor 2nd	Displays the state of the toner sensor (Cyan).
T/C Sensor 3rd	Displays the state of the toner sensor (Magenta).
T/C Sensor 4th	Displays the state of the toner sensor (Black).
Motor	Drives developer motor, developer clutch.

2. To stop motor driving, press the stop key.

Method: [Waste Box]
1. Turn each switch or sensor on and off manually to check the status.
   When a switch or sensor is detected to be in the ON position, the display for that switch or sensor will be “1”

Display	Switches and sensors
Waste Box Sensor	Displays the state of the waste toner box.
Motor	Drives developer motor, developer clutch.

2. To stop motor driving, press the stop key.

Completion
Press the stop key. The screen for selecting a maintenance item No. is displayed.

Item No.	Description
U157	**Checking the developing drive time**

Description
Displays the developing drive time for checking a figure, which is used as a reference when correcting the toner control.
Purpose
To check the developing drive time after replacing the developing unit.

Method
1. Press the start key. The developing drive time of each color is displayed.

Display	Description
C	Cyan developing drive time (min)
M	Magenta developing drive time (min)
Y	Yellow developing drive time (min)
K	Black developing drive time (min)

Setting
1. Select the item to be set.
2. Change the setting value using the cursor left/right keys or numeric keys.

Display	Description	Setting range	Initial setting
C	Cyan developing drive time (min)	0 to 59999	0
M	Magenta developing drive time (min)	0 to 59999	0
Y	Yellow developing drive time (min)	0 to 59999	0
K	Black developing drive time (min)	0 to 59999	0

3. Press the start key. The setting is set.

Completion
Press the stop key. The screen for selecting a maintenance item No. is displayed.

Item No.	Description
U161	**Setting the fuser control temperature**

Description
Changes the fuser control temperature and control temperature correction value and other set values.
Purpose
Normally no change is necessary. However, this mode can be used to prevent curling or creasing of paper, or solve a fuser problem on thick paper.

Setting
1. Press the start key.
2. Select the item to be set.
3. Change the setting value using the cursor left/right keys.

Display	Description	Setting range	Initial setting
Copy Curb(Edge)	Prevention temperature of overtemperature rise under copy	100 to 250	210
Curb(Edge)	Prevention temperature of overtemperature rise	100 to 250	240
Return(Edge)	Return temperature of overtemperature rise	100 to 250	190
Ready(Edge)	Ready display temperature	0 to 200	140
Pressure(Press)	Pressurizing beginning temperature	0 to 200	100
High speed(Center)	Full speed shift temperature	0 to 200	130
Ready(Center)	Ready display temperature	100 to 200	150
Drive(Center)	The second stability temperature	100 to 200	160
Full speed(Center)	Print control temperature	100 to 200	160
Wait(Center)	Control temperature when being standing by	100 to 200	130
WarmUp Curb(Center)	Electric power control temperature at start-up	0 to 200	160
Curb(Center)	Prevention temperature of overtemperature rise	170 to 250	240
Low power(Center)	Low electric power control temperature	0 to 200	90
Ready(Press)	Ready display temperature	0 to 200	60
Curb(Press)	Prevention temperature of overtemperature rise	170 to 250	240
Wait Offset(Press)	Correction temperature when being standing by	0 to 200	100

4. Press the start key. The value is set.

<table>
<tr><th>Item No.</th><th>Description</th></tr>
<tr><td>U161</td><td>Completion
Press the stop key. The screen for selecting a maintenance item No. is displayed.</td></tr>
<tr><td>U167</td><td>Checking/clearing the fuser count

Description
Displays and clears the fuser count for checking.
Purpose
To check or clear the fuser count after replacement of the fuser unit. Also to clear the counts after replacing unit.

Method
1. Press the start key. The fuser count is displayed.
<table>
<tr><th>Display</th><th>Description</th></tr>
<tr><td>Cnt</td><td>Fuser count value</td></tr>
<tr><td>Clear</td><td>Clearness of fuser counter value</td></tr>
</table>

Setting:[Cnt]
1. Press [Cnt].
2. Change the setting using the cursor left/right keys or numeric keys.
3. Press the start key. The setting is set.

Clearing
1. Press [Clear].
2. Press the start key. The count is cleared.

Completion
Press the stop key. The screen for selecting a maintenance item No. is displayed.</td></tr>
<tr><td>U169</td><td>Confirmation/setting the fuser power supply

Description
Displays and settings the specification of fuser power supply for checking.
Purpose
To check or set the specification of fuser power supply after replacement of the fuser power supply.

Method
1. Press the start key. The specification of fuser power supply is displayed.
<table>
<tr><th>Display</th><th>Description</th></tr>
<tr><td>Mode</td><td>Specification of fuser power supply
(1: 100V , 2: 200V , 3: 120V)</td></tr>
</table>

Setting
1. Change the setting using the cursor left/right keys or numeric keys.
2. Press the start key. The value is set.

Completion
Press the stop key. The screen for selecting a maintenance item No. is displayed.</td></tr>
</table>

Item No.	Description
U199	**Displaying fuser heater temperature** **Description** Displays the detected fuser temperature. **Purpose** To check the fuser temperature. **Method** 1. Press the start key. The current setting is displayed. **Completion** Press the stop key. The screen for selecting a maintenance mode No. is displayed.
U201	**Initializing the touch panel** **Description** Automatically correct the positions of the X- and Y-axes of the touch panel. **Purpose** To automatically correct the display positions on the touch panel after it is replaced. **Method** 1. Press the start key. 2. Select the [Initialize] or [Check]. **Method: [Initialize]** 1. Press the start key. 2. Press the center of the + keys. Be sure to press three + keys displayed in order. The touch panel is adjusted automatically. 3. Press the indicated three + keys, and then check the display. 4. Press the stop key. The screen for selecting a maintenance item No. is displayed. **Method: [Check]** 1. Press the start key. 2. Press the indicated three + keys, and then check the display. When adjusting the display, press [Initialize] to execute the adjustment automatically. 3. Press the stop key. The screen for selecting a maintenance item No. is displayed. **Completion** Press the stop key. The screen for selecting a maintenance item No. is displayed.

Display	Description
Fix Press	Press roller center temperature (°C)
Fix Edge	Heat roller edge temperature (°C)
Fix Center	Heat roller center temperature (°C)

Display	Description
Initialize	Adjusts the display on the panel automatically
Check	Checks the display on the touch panel

Item No.	Description
U203	**Checking DP operation** **Description** Simulates the original conveying operation separately in the DP. **Purpose** To check the DP operation. **Method** 1. Press the start key. 2. Place an original in the DP if running this simulation with paper. 3. Select the speed to be operated. **Display** / **Description** Normal Speed — Normal reading (600 dpi) High Speed — High-speed reading 4. Select the item to be operated. **Display** / **Description** CCD ADP (Non-P) — Without paper, single-sided original of CCD (continuous operation) CCD ADP — With paper, single-sided original of CCD CCD RADP (Non-P) — Without paper, double-sided original of CCD (continuous operation) CCD RADP — With paper, double-sided original of CCD 5. Press the start key. The operation starts. 6. To stop continuous operation, press the stop key. **Completion** Press the stop key. The screen for selecting a maintenance item No. is displayed.

Item No.	Description
U207	**Checking the operation panel keys** **Description** Checks operation of the operation panel keys. **Purpose** To check operation of all the keys and LEDs on the operation panel. **Method** 1. Press the start key. The screen for executing is displayed. 2. [Count0] is displayed and the leftmost LED on the operation panel lights. 3. As the keys lined up in the same line as the lit indicator are pressed in the order from the top to the bottom, the figure shown on the touch panel increases in increments of 1. When all the keys in that line are pressed and if there are any LEDs corresponding to the keys in the line on the immediate right, the top LED in that line will light. 4. When all the keys on the operation panel have been pressed, all the LEDs light for up to 10 seconds. **Completion** Press the stop key. The screen for selecting a maintenance item No. is displayed.
U222	**Setting the IC card type** **Description** Sets the type of IC card. **Purpose** To change the type of IC card. **Setting** 1. Press the start key. 2. Select the item. Display: Other — Description: The type of IC card is SSFC. Display: SSFC — Description: The type of IC card is not SSFC. * : Initial setting: Other 3. Press the start key. The setting is set. **Completion** Press the stop key. The screen for selecting a maintenance item No. is displayed.

Item No.	Description
U243	**Checking the operation of the DP motors** **Description** Turns the motors or clutches in the DP on. **Purpose** To check the operation of the DP motors and clutches. **Method** 1. Press the start key. 2. Select the item to be operated. 3. Press the start key. The operation starts. **Display** / **Description** Conv Motor — DP paper feed motor (DPPFM) is turned on Rev Motor — DP switchback motor (DPSBM) is turned on Feed Clutch — DP paper feed clutch (DPPFCL) is turned on Regist Clutch — DP registration clutch (DPRCL) is turned on 4. To turn each motor off, press the stop key. **Completion** Press the stop key when operation stops. The screen for selecting a maintenance item No. is displayed.

Item No.	Description
U244	**Checking the DP switches** **Description** Displays the status of the respective switches in the DP. **Purpose** To check if the respective switches in the DP operate correctly. **Method** 1. Press the start key. 2. Turn each switch or sensor on and off manually to check the status. When a switch or sensor is detected to be in the ON position, the display for that switch or sensor will be “1”.

Display	Switches and sensors
Switch 00000000	
1st digit	DP interlock switch (DPILSW)
2nd digit	DP open/close sensor (DPOCS)
3rd digit	DP paper feed sensor (DPPFS)
4th digit	DP registration sensor (DPRS)
5th digit	DP timing sensor (DPTS)
6th digit	DP original sensor (DPOS)
7th digit	DP original size length sensor (DPOLS)
8th digit	-

Completion
Press the stop key. The screen for selecting a maintenance item No. is displayed.

Item No.	Description
U250	**Checking/clearing the maintenance cycle**

Description
Changes preset values for maintenance cycle and automatic grayscale adjustment.
Purpose
Provides changing the time when the message to acknowledge to conduct maintenance and automatic grayscale adjustment is periodically displayed.

Setting
1. Press the start key.
2. Select the item to be changed.
3. Change the setting using the cursor left/right keys or numeric keys.

Display	Description	Setting range	Initial setting
M.Cnt A	Preset values for maintenance cycle (A)	0 to 9999999	200000
M.Cnt B	Preset values for maintenance cycle (B)	0 to 9999999	200000
M.Cnt HT	Preset values for automatic grayscale adjustment	0 to 9999999	0

4. Press the start key. The setting value is set.

Clearing
1. Select [Clear].
2. Press the start key. The setting value is cleared.

Completion
Press the stop key. The screen for selecting a maintenance item No. is displayed.

Item No.	Description
U251	**Checking/clearing the maintenance counter** **Description** Displays and clears or changes the maintenance count and automatic grayscale adjustment count. **Purpose** To verify the maintenance counter count and automatic grayscale count. Also to clear the count during maintenance service. **Setting** 1. Press the start key. 2. Select the item to be changed. 3. Change the setting using the cursor left/right keys or numeric keys. **Display** / **Description** / **Setting range** / **Initial setting** M.Cnt A / Count value for maintenance cycle (A) / 0 to 9999999 / 0 M.Cnt B / Count value for maintenance cycle (B) / 0 to 9999999 / 0 M.Cnt HT / Automatic grayscale adjustment count / 0 to 9999999 / 0 4. Press the start key. The setting value is set. **Clearing** 1. Select [Clear]. 2. Press the start key. The setting value is cleared. **Completion** Press the stop key. The screen for selecting a maintenance item No. is displayed.

Item No.	Description
U252	**Setting the destination**

Description
Switches the operations and screens of the machine according to the destination.
Purpose
To be executed after initializing the backup RAM, in order to return the setting to the value before replacement or initialization.

Method
1. Press the start key.
2. Select the destination.

Display	Description
Japan Metric	Metric (Japan) specifications
Inch	Inch (North America) specifications
Europe Metric	Metric (Europe) specifications
Asia Pacific	Metric (Asia Pacific) specifications
Australia	Australia specifications
China	China specifications
Korea	Korea specifications

3. Press the start key.
4. Turn the main power switch off and on.
   * : An error code is displayed in case of an initialization error.
   When errors occurred, turn main power switch off then on, and execute initialization using maintenance item U252.

Error codes

Codes	Description
0001	Entity error
0002	Controller error
0003	OS error
0020	Engine error
0040	Scanner error

Item No.	Description
U253	**Switching between double and single counts** **Description** Switches the count system for the total counter and other counters. **Purpose** Used to select, according to the preference of the user (copy service provider), if folio size paper is to be counted as one sheet (single count) or two sheets (double count). **Setting** 1. Press the start key. 2. Select the item to set. Display: Color — Description: Count system of color mode Display: B/W — Description: Count system of black/white mode 3. Select the count system. Display: SGL (All) — Description: Single count for all size paper Display: DBL (A3/Ledger) — Description: Double count for A3/Ledger size or larger Display: DBL (B4) — Description: Double count for B4 size or larger Display: DBLFolio) — Description: Double count for Folio size or larger * : Initial setting: DBL (A3/Ledger) 4. Press the start key. The setting is set. **Completion** Press the stop key. The screen for selecting a maintenance item No. is displayed.
U260	**Selecting the timing for copy counting** **Description** Changes the copy count timing for the total counter and other counters. **Purpose** To be set according to user request. **Setting** 1. Press the start key. 2. Select the copy count timing. Display: Feed — Description: When secondary paper feed starts Display: Eject — Description: When the paper is ejected * : Initial setting: Eject 3. Press the start key. The setting is set. **Completion** Press the stop key. The screen for selecting a maintenance item No. is displayed.

<table>
<tr><th>Item No.</th><th>Description</th></tr>
<tr><td>U285</td><td>

Setting service status page

Description
Determines displaying the print coverage report on reporting.
Purpose
According to user request, changes the setting.

Setting
1. Press the start key.
2. Select [On] or [Off].

Display	Description
On	Displays the print coverage
Off	Not to display the print coverage

* : Initial setting: On

3. Press the start key. The setting is set.

Completion
Press the stop key. The screen for selecting a maintenance item No. is displayed.

</td></tr>
<tr><td>U325</td><td>

Setting the paper interval

Description
Determines the interval between pages and the toner replenishment amount when printing pages with high print coverage.
Purpose
Modify the settings only if a spotted background or uneven density appears when printing pages with high print coverage.

Method
1. Press the start key.
2. Change the setting using the cursor left/right keys or numeric keys.

Display	Description	Setting range	Initial setting
Rank	Setting the rank	0 to 4	1

3. Press the start key. The setting value is set.

Completion
Press the stop key. The screen for selecting a maintenance item No. is displayed.

</td></tr>
</table>

Item No.	Description
U326	**Setting the black line cleaning indication**

Description
Sets whether to display the cleaning guidance when detecting the black line.
Purpose
Displays the cleaning guidance in order to make the call for service with the black line decrease by the rubbish on the contact glass when scanning from the DP.

Method
1. Press the start key.
2. Select the item to set. The screen for setting each item is displayed.

Display	Description
Black Line Mode	Black line cleaning guidance ON/OFF setting
Black Line Cnt	Setting counts of the cleaning guidance indication

Setting: [Black Line Mode]
1. Select [On] or [Off].

Display	Description
On	Displays the cleaning guidance
Off	Not to display the cleaning guidance

* : Initial setting: On
2. Press the start key. The setting is set.

Setting: [Black Line Cnt]
1. Select [Cnt].
2. Change the setting value using the cursor left/right keys or numeric keys.

Display	Description	Setting range	Initial setting
Cnt	Setting counts of the cleaning guidance indication (x 1000 sheets)	0 to 255	8

* : When setting is 0, the black line cleaning indication is displayed only if the black line is detected.
3. Press the start key. The value is set.

Completion
Press the stop key. The screen for selecting a maintenance item No. is displayed.

Item No.	Description
U332	**Setting the size conversion factor** **Description** Sets the coefficient of nonstandard sizes in relation to the A4/Letter size. The coefficient set here is used to convert the black ratio in relation to the A4/Letter size and to display the result in user simulation. **Purpose** To set the coefficient for converting the black ratio for nonstandard sizes in relation to the A4/Letter size. **Setting** 1. Press the start key. 2. Select [Rate]. 3. Change the setting using the cursor left/right keys or numeric keys. Display: Rate; Description: Size parameter; Setting range: 0.1 to 3.0; Initial setting: 1.0 4. Press the start key. The value is set. **Completion** Press the stop key. The screen for selecting a maintenance item No. is displayed.
U341	**Specific paper feed location setting for printing function** **Description** Sets a paper feed location specified for printer output. **Purpose** To use a paper feed location only for printer output. A paper feed location specified for printer output cannot be used for copy output. **Method** 1. Press the start key. 2. Select the paper feed location for the printer. 3. Select [On] or [Off] using the cursor left/right keys. Display: Cassette1; Description: Cassette 1 Display: Cassette2; Description: Cassette 2 (optional paper feeder) Display: Cassette3; Description: Cassette 3 (optional paper feeder) * : When an optional paper feed device is not installed, the corresponding count is not displayed. 4. Press the start key. The setting is set. **Completion** Press the stop key. The screen for selecting a maintenance item No. is displayed.

<table>
<tr><th>Item No.</th><th>Description</th></tr>
<tr><td>U343</td><td>

Switching between duplex/simplex copy mode

Description
Switches the initial setting between duplex and simplex copy.
Purpose
To be set according to frequency of use: set to the more frequently used mode.

Setting
1. Press the start key.
2. Select [On] or [Off].

Display	Description
On	Duplex copy
Off	Simplex copy

* : Initial setting: Off

3. Press the start key. The setting is set.

Completion
Press the stop key. The screen for selecting a maintenance item No. is displayed.

</td></tr>
<tr><td>U345</td><td>

Setting the value for maintenance due indication

Description
Sets when to display a message notifying that the time for maintenance is about to be reached, by setting the number of copies that can be made before the current maintenance cycle ends. When the difference between the number of copies of the maintenance cycle and that of the maintenance count reaches the set value, the message is displayed.
Purpose
To change the time for maintenance due indication.

Setting
1. Press the start key.
2. Select [Cnt].
3. Change the setting using the cursor left/right keys or numeric keys.

Display	Description	Setting range	Initial setting
Cnt	Time for maintenance due indication (Remaining number of copies that can be made before the current maintenance cycle ends)	0 to 9999	0

4. Press the start key. The value is set.

Clearing
1. Select [Clear].
2. Press the start key. The value is cleared.

Completion
Press the stop key. The screen for selecting a maintenance item No. is displayed.

</td></tr>
</table>

Item No.	Description
U402	**Adjusting margins of image printing**

Description
Adjusts margins for image printing.
Purpose
Make the adjustment if margins are incorrect.

Adjustment
1. Press the start key.
2. Press the system menu key.
3. Press the start key to output a test pattern.
4. Press the system menu key.
5. Select the item to be adjusted.

Display	Description	Setting range	Initial setting	Change in value per step
Lead	Printer leading edge margin	0 to 10.0	3.0	0.1 mm
A Margin	Printer left margin	0 to 10.0	2.5	0.1 mm
C Margin	Printer right margin	0 to 10.0	2.5	0.1 mm
Trail	Printer trailing edge margin	0 to 10.0	5.0	0.1 mm

6. Change the setting value using the cursor left/right keys or numeric keys.
   Increasing the value makes the margin wider, and decreasing it makes the margin narrower.

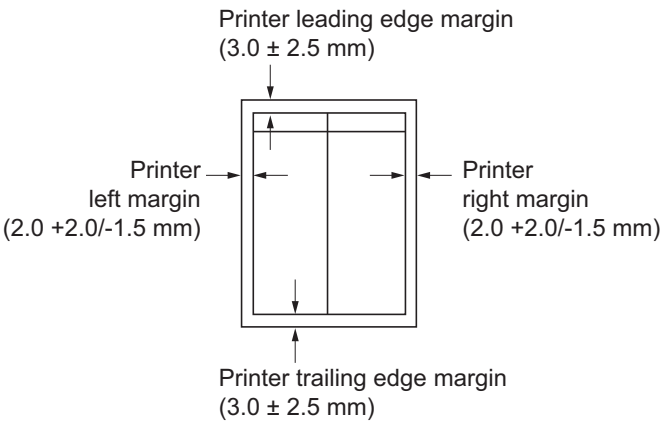

Figure 1-3-15

7. Press the start key. The value is set.

Caution
Check the copy image after the adjustment. If the image is still incorrect, perform the following adjustments in maintenance mode.

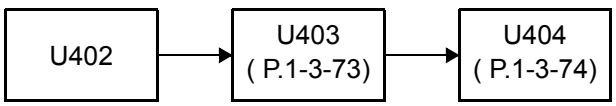

Completion
Press the stop key. The screen for selecting a maintenance item No. is displayed.

Item No.	Description
U403	**Adjusting margins for scanning an original on the contact glass**

Description
Adjusts margins for scanning the original on the contact glass.
Purpose
Perform the adjustment if margins are incorrect.

Adjustment
1. Press the start key.
2. Press the system menu key.
3. Place an original and press the start key to make a test copy.
4. Press the system menu key.
5. Select the item to be adjusted.

Display	Description	Setting range	Initial setting	Change in value per step
A Margin	Scanner left margin	0 to 10.0	2.0	0.5 mm
B Margin	Scanner leading edge margin	0 to 10.0	2.0	0.5 mm
C Margin	Scanner right margin	0 to 10.0	2.0	0.5 mm
D Margin	Scanner trailing edge margin	0 to 10.0	2.0	0.5 mm

6. Change the setting value using the cursor left/right keys or numeric keys.
   Increasing the value makes the margin wider, and decreasing it makes the margin narrower.

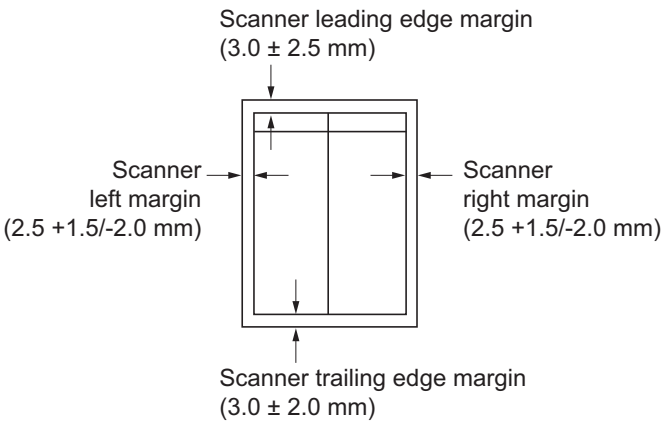

Figure 1-3-16

7. Press the start key. The value is set.

Caution
Check the copy image after the adjustment. If the image is still incorrect, perform the following adjustments in maintenance mode.

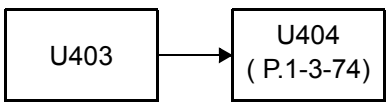

Completion
Press the stop key. The indication for selecting a maintenance item No. appears.

Item No.	Description
U404	**Adjusting margins for scanning an original from the DP**

Description
Adjusts margins for scanning the original from the DP.
Purpose
Perform the adjustment if margins are incorrect.

Caution
Before making this adjustment, ensure that the following adjustments have been made in maintenance mode

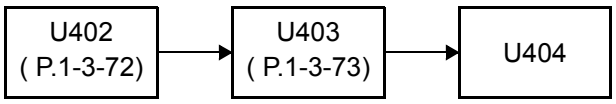

Adjustment
1. Press the start key.
2. Press the system menu key.
3. Place an original on the DP and press the start key to make a test copy.
4. Press the system menu key.
5. Select the item to be adjusted.

Display	Description	Setting range	Initial setting	Change in value per step
A Margin	DP left margin	0 to 10.0	3.0	0.5 mm
B Margin	DP leading edge margin	0 to 10.0	2.5	0.5 mm
C Margin	DP right margin	0 to 10.0	3.0	0.5 mm
D Margin	DP trailing edge margin	0 to 10.0	4.0	0.5 mm

6. Change the setting value using the cursor left/right keys or numeric keys.
   Increasing the value makes the margin wider, and decreasing it makes the margin narrower.

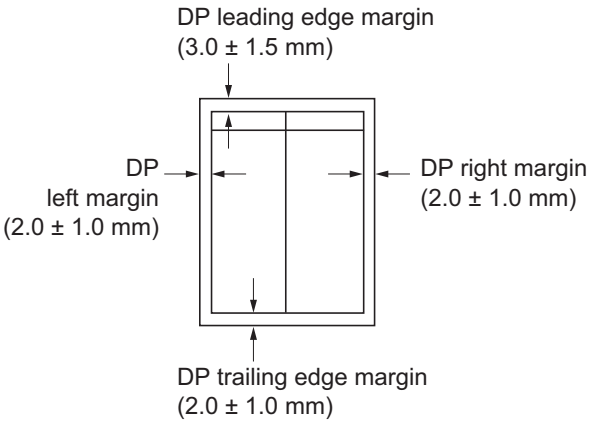

Figure 1-3-17

7. Press the start key. The value is set.

Completion
Press the stop key. The screen for selecting a maintenance item No. is displayed.

Item No.	Description
U407	**Adjusting the leading edge registration for memory image printing**

Description
Adjusts the leading edge registration during memory copying.
Purpose
Perform the following adjustment if there is a regular error between the leading edge of the copy image on the front face and that on the reverse face during duplex switchback copying.

Caution
Before Performing this adjustment, ensure that the following adjustments have been made in maintenance mode.

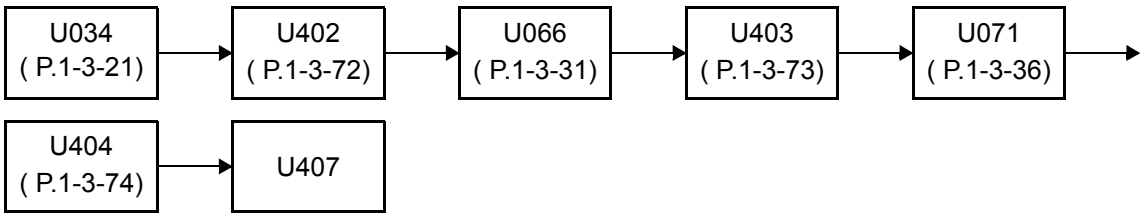

Adjustment
1. Press the start key.
2. Press the system menu key.
3. Place an original and press the start key to make a test copy.
4. Press the system menu key.
5. Select [Adj Data].

Display	Description	Setting range	Initial setting	Change in value per step
Adj Data	Leading edge registration for memory image printing	-47 to 47	0	0.1 mm

6. Change the setting value using the cursor left/right keys or numeric keys.
   For copy example 1, decrease the value. For copy example 2, increase the value.

Figure 1-3-18

7. Press the start key. The value is set.

Completion
Press the stop key. The screen for selecting a maintenance item No. is displayed.

Item No.	Description
U411	**Adjusting the scanner automatically**

Description
Uses a specified original and automatically adjusts the following items in the scanner and the DP scanning sections.
Scanner section: Original size magnification, leading edge timing, center line, input gamma, input gamma in monochrome mode and matrix
DP scanning section: Original size magnification, leading edge timing, center line

Purpose
To perform automatic adjustment of various items in the scanner and the DP scanning sections.

Method
1. Press the start key.
2. Select the item.

Display	Description	Original to be used for adjustment (P/N)
Table	Automatic adjustment in the scanner section	7505000005
DP	Automatic adjustment in the DP scanning section:	303LJ57010
All	Performs automatic adjustment in the DP scanning section following automatic adjustment in the scanner section	7505000005/ 303LJ57010
Target	Set-up for obtaining the target value	-

Method: Table
To manually enter the target value
1. Enter the target values which are shown on the specified original (P/N: 7505000005) executing maintenance item U425.
2. Set a specified original (P/N: 7505000005) on the platen.
3. Enter maintenance item U411.
4. Select [Target].
5. Select [U425] using the cursor left/right keys.
6. Select [Table].
7. Press the start key. Auto adjustment starts.

To manually enter the target value
The accuracy of adjustment is worse than the manual entry.
1. Set a specified original (P/N: 7505000005) on the platen.
2. Enter maintenance item U411.
3. Select [Target].
4. Select [Auto] using the cursor left/right keys.
5. Select [Table].
6. Press the start key. Auto adjustment starts.

* : When automatic adjustment has normally completed, [OK] is displayed. If a problem occurs during auto adjustment, [NG XX] (XX is replaced by an error code) is displayed and operation stops. Should this happen, determine the details of the problem and repeat the procedure from the beginning.

Item No.	Description
U411	**Method: DP** 1. Select [DP]. 2. Set a specified original (P/N: 303LJ57010) in the DP. 3. Press the start key. Auto adjustment starts. * : When automatic adjustment has normally completed, [OK] is displayed. If a problem occurs during auto adjustment, [NG XX] (XX is replaced by an error code) is displayed and operation stops. Should this happen, determine the details of the problem and repeat the procedure from the beginning.

Error Codes

Codes	Description
00	Automatic adjustment success
01	Black band detection error (scanner leading edge registration)
03	Black band detection error (scanner main scanning direction magnification)
04	Black band is not detected (scanner leading edge registration)
05	Black band is not detected (scanner center line)
06	Black band is not detected (scanner main scanning direction magnification)
07	Black band is not detected (scanner auxiliary scanning direction magnification)
08	Black band is not detected (DP main scanning direction magnification far end)
09	Black band is not detected (DP main scanning direction magnification near end)
0a	Black band is not detected (DP auxiliary scanning direction magnification leading edge)
0b	Black band is not detected (DP auxiliary scanning direction magnification leading edge original check)
0c	Black band is not detected (DP auxiliary scanning direction trailing edge)
0d	White band is not detected (DP auxiliary scanning direction trailing edge 2)
0e	DMA time out
0f	Auxiliary scanning direction magnification error
10	Auxiliary scanning direction leading edge detection error
11	Auxiliary scanning direction trailing edge detection error
12	Auxiliary scanning direction skew 1.5 error
13	Maintenance request error
14	Main scanning direction center line error
15	Main scanning direction skew 1.5 error
16	Main scanning direction magnification error
17	Service call error
18	DP paper misfeed error

Item No.	Description
U411	

Codes	Description
1a	Original error (Dirt of the original for adjustment and damage)
1b	Original error (scanner input gamma adjustment)
1c	Original error (scanner matrix adjustment)
63	TestRAW acquisition completion

Completion

Press the stop key. The screen for selecting a maintenance item is displayed.

Item No.	Description
U425	**Setting the target**

Description
Enters the lab values that is indicated on the back of the chart (P/N: 7505000005) used for adjustment.
Purpose
Performs data input in order to correct for differences in originals during automatic adjustment.

Method
1. Press the start key.
2. Select the item to be set.

Display	Description
White	Setting the white patch for the original for adjustment
Black	Setting the black patch for the original for adjustment
Gray1	Setting the Gray1 patch for the original for adjustment
Gray2	Setting the Gray2 patch for the original for adjustment
Gray3	Setting the Gray3 patch for the original for adjustment
C	Setting the cyan patch for the original for adjustment
M	Setting the magenta patch for the original for adjustment
Y	Setting the yellow patch for the original for adjustment
R	Setting the red patch for the original for adjustment
G	Setting the green patch for the original for adjustment
B	Setting the blue patch for the original for adjustment
Adjust Original	Setting the main and auxiliary scanning directions

3. Select the item to be set.

Display	Description	Setting range
L	Setting the L value	0.0 to 100.0
a	Setting the a value	-200.0 to 200.0
b	Setting the b value	-200.0 to 200.0

4. Enters the value that is indicated on the back of the chart using the cursor left/right keys or numeric keys.
5. Press the start key. The value is set.

Item No.	Description
U425	**Setting: [Adjust Original]** 1. Measure the distance from the leading edge to the top of black belt 1 of the original at A, B and C. Measurement procedure 1) Measure the distance from the leading edge to the top of black belt 1 of the original at A (30 mm from the left edge), B (148.5 mm from the left edge) and C (267 mm from the left edge), respectively. 2) Apply the following formula for the values obtained: ((A + B + C) / 3) 2. Enter the values solved using the cursor left/right keys or numeric keys in [Dist1]. 3. Press the start key. The value is set. 4. Measure the distance from the left edge to the right edge black belt 2 of the original at F. Measurement procedure 1) Measure the distance from the left edge to the right edge black belt 2 of the original at F (15 mm from the top edge of black belt 1). 5. Enter the values using the cursor left/right keys or numeric keys in [Dist2]. 6. Press the start key. The value is set. 7. Measure the distance from the top edge of black belt 1 to the bottom of black belt 3 of the original at D and E. 1) Measure the distance from the top edge of black belt 1 to the bottom of black belt 3 of the original at D (30 mm from the left edge) and E (267 mm from the left edge), respectively. 2) Apply the following formula for the values obtained: (D/2 + E/2) 8. Enter the measured value using the cursor left/right keys or numeric keys in [Dist3]. 9. Press the start key. The value is set. 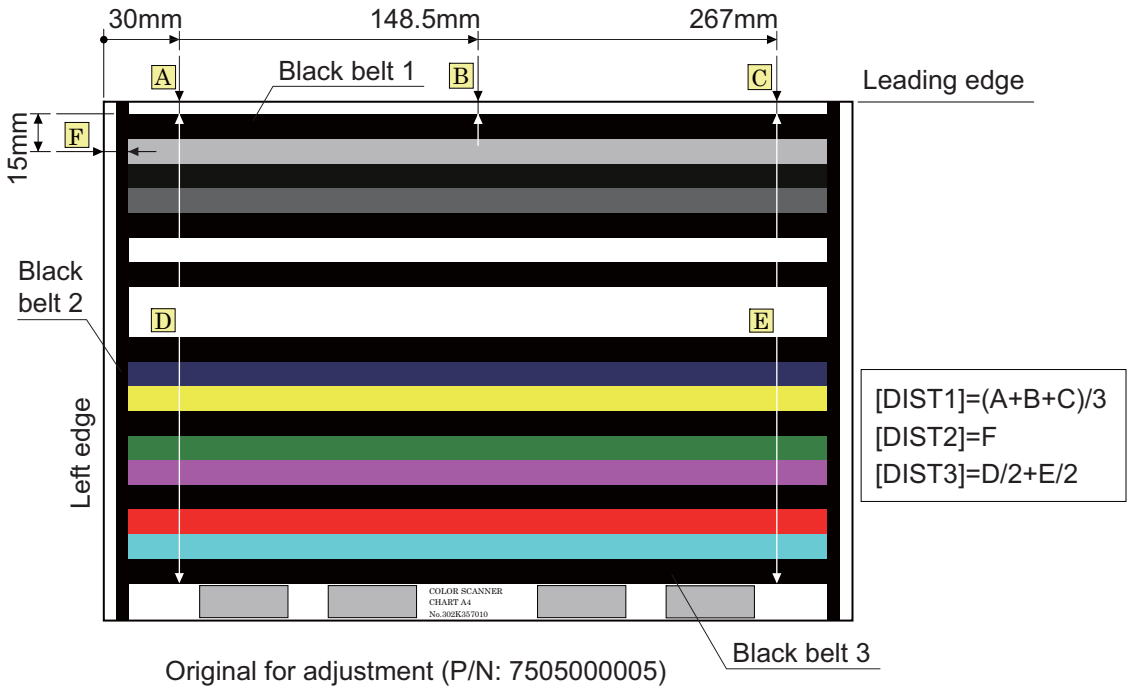 **Figure 1-3-19** **Completion** Press the stop key. The screen for selecting a maintenance item No. is displayed.

Item No.	Description
U429	**Setting the offset for the color balance**

Description
Displays and changes the density for each color during copying in the various image quality modes.
Purpose
To change the balance for each color.

Method
1. Press the start key.
2. Select the image quality mode. The setting screen for the selected item is displayed.

Display	Description
Text + Photo	Density of each color in the text & photo mode
Photo	Density of each color in the photo mode
Text	Density of each color in the text mode
Graphics/Map	Density of each color in the graphics/map mode
Copy/Print out	Density of each color in the printed document mode

Setting
1. Select the item to be set.
2. Change the setting value using the cursor left/right keys or numeric keys.

Display	Description	Setting range	Initial setting
C	Value of the cyan setting	-5 to 5	0
M	Value of the magenta setting	-5 to 5	0
Y	Value of the yellow setting	-5 to 5	0
K	Value of the black setting	-5 to 5	0

Increasing the value darkens the density and decreasing it lightens the density.
3. Press the start key. The value is set.

Supplement
While this maintenance item is being executed, copying from an original is available in interrupt copying mode (which is activated by pressing the system menu key).

Completion
Press the stop key. The screen for selecting a maintenance item No. is displayed.

Item No.	Description
U432	**Setting the center offset for the exposure**

Description
Sets the offset value for the setting data for exposure centering adjustment under user simulation. For example, if the value for the exposure centering adjustment is set to -1 and you change the offset value to +2, image processing is performed as though the exposure centering adjustment setting is +1.

Purpose
Set according to the preference of the user.

Setting

1. Press the start key.
2. Select the item to be set. The setting screen for the selected item is displayed.

Display	Description
Color	Exposure offset setting for the color mode
B/W	Exposure offset setting for the black and white mode

3. Select image quality mode to be set.
4. Change the setting value using the cursor left/right keys or numeric keys.

Display	Description	Setting range	Initial setting
Text + Photo	Offset value for the text & photo mode	-3 to 3	0
Photo	Offset value for the photo mode	-3 to 3	0
Text	Offset value for the text mode	-3 to 3	0

* : If the setting value is increased to increase the exposure centering adjustment value, images is darker.
If the setting value is decreased to decrease the exposure centering adjustment value, images is lighter.

5. Press the start key. The value is set.

Supplement
While this maintenance item is being executed, copying from an original is available in interrupt copying mode (which is activated by pressing the system menu key).

Completion
Press the stop key. The screen for selecting a maintenance item No. is displayed.

Item No.	Description
U464	**Setting the ID correction operation**

Description
Turns ID correction (calibration) on or off. Also, this determines the duration of calibration and the timing of calibration during printing. Also, this allows individual settings for calibration operation by enabling custom settings.

Purpose
To restrict calibration when poor image quality is generated. Also, this allows individual settings for calibration by enabling custom settings in setting the calibration cycle under the machine defaults depending on the user preferences.

Method

1. Press the start key.
2. Select the item to be set. The setting screen for the selected item is displayed.

Display	Description
Permission	Setting of operation permission
Time Interval	Setting of driving time
Bias Target	Setting of Bias target
Gamma Target	Setting of quantities of light target
Calib	Execution of calibration

Setting: [Permission]

1. Select the item to be set.
2. Change the setting value using the +/- or numeric keys.

Display	Description	Setting range	Initial setting
Calib	Setting the permission of calibration.	On/Off	On
Paper Int Calib	Setting the permission of calibration between paper.	On/Off	On

3. Press the start key. The value is set.

Setting: [Time Interval]

1. Select the item to be set.
2. Change the setting value using the +/- or numeric keys.

Display	Description	Setting	Initial set-
Paper Int Calib	Setting the driving time of the calibration between paper.	0 to 100	10
Sleep Out	Setting the execution time of sleeve return calibration.	0 to 100	20

3. Press the start key. The value is set.

Item No.	Description
U464	**Setting: [Bias Target/Gamma Target]** 1. Select the item to be set. 2. Change the setting value using the +/- or numeric keys.

Display	Description	Setting range	Initial setting
1st	Setting of target (Yellow)	10 to 1000	935/400
2nd	Setting of target (Cyan)	10 to 1000	895/200
3rd	Setting of target (Magenta)	10 to 1000	885/200
4th	Setting of target (Black)	10 to 1000	846/130

3. Press the start key. The value is set.

Method: [Calib]

1. Select the item to be set
2. Press the start key. The operation starts.

Display	Description
Regist	Executes the calibration to correct registration.
Gamma	Executes the calibration to quantities of light.
Paper Int	Executes the calibration between paper.
Color Regist	Executes the calibration to color registration.

To stop operation, press the stop key.

Completion

Press the stop key. The screen for selecting a maintenance item No. is displayed.

Item No.	Description
U470	**Setting the JPEG compression ratio**

Description
Sets the compression ratio for JPEG images in each image quality mode.
Purpose
To change the setting in accordance with the image that the user is copying. For example, in order to soften the coarseness of the image when making copies at over 200% magnification, change the level of compression by raising the value. Lowering the value will increase the compression and thereby lower the image quality; Raising the value will increase image quality but lower the image processing speed.

Method
1. Press the start key.
2. Select the item to be set.

Display	Description
Copy	Compression ratio for copying
Send	Compression ratio for sending
System	Compression ratio for temporary storage in system

Setting: [Copy]
1. Select the item to be set.

Display	Description
Photo	Compression ratio in the photo mode
Text	Compression ratio in the text mode

2. Select the item to be set.
3. Change the setting value using the cursor left/right keys or numeric keys.

Display	Description	Setting range	Initial setting
Y	Compression ratio of brightness	1 to 100	85
CbCr	Compression ratio of color differential	1 to 100	85

4. Press the start key. The value is set.

Item No.	Description
U470	

Setting: [Send]

1. Select the item to be set.

Display	Description
Photo	Compression ratio in the photo mode
Text	Compression ratio in the text mode
HC-PDF	Compression ratio of high compression PDF

2. Select the item to be set.
3. Change the setting value using the cursor left/right keys or numeric keys.
   [Photo] or [Text]

Display	Description	Setting range	Initial setting
Y1 to Y5	Compression ratio of brightness	1 to 100	30/40/51/70/90
CbCr1 to CbCr5	Compression ratio of color differential	1 to 100	30/40/51/70/90

   [HC-PDF]

Display	Description	Setting range	Initial setting
Y3 to Y3	Compression ratio of brightness	1 to 100	15/25/60
CbCr3 to CbCr3	Compression ratio of color differential	1 to 100	15/25/60

4. Press the start key. The value is set.

Setting: [System]

1. Select the item to be set.
2. Change the setting value using the cursor left/right keys or numeric keys.

Display	Description	Setting range	Initial setting
Y	Compression ratio of brightness	1 to 100	90
CbCr	Compression ratio of color differential	1 to 100	90

3. Press the start key. The value is set.

Supplement

While this maintenance item is being executed, copying from an original is available in interrupt copying mode (which is activated by pressing the system menu key).

Completion

Press the stop key. The screen for selecting a maintenance item No. is displayed.

Item No.	Description
U473	**Adjusting laser power output** **Description** Adjusts the laser output power for each color. **Purpose** Enter the exposure density correction data after replacing the laser scanner unit. **Setting** 1. Press the start key. 2. Select the item to be set. 3. Change the setting value using the cursor left/right keys or numeric keys. 4. Press the start key. The value is set. **Completion** Press the stop key. The screen for selecting a maintenance item No. is displayed.

Display	Description	Setting range	Initial setting
1st	Setting the LSU laser power (Yellow)	0 to 255	92
2nd	Setting the LSU laser power (Cyan)	0 to 255	92
3rd	Setting the LSU laser power (Magenta)	0 to 255	92
4th	Setting the LSU laser power (Black)	0 to 255	50

Item No.	Description
U901	**Checking copy counts by paper feed locations** **Description** Displays or clears copy counts by paper feed locations. **Purpose** To check the time to replace consumable parts. Also to clear the counts after replacing the consumable parts. **Method** 1. Press the start key. The counts by paper feed locations are displayed. **Display** / **Description** MPT — MP tray Cassette1 — Cassette 1 Cassette2 — Cassette 2 (optional paper feeder) Cassette3 — Cassette 3 (optional paper feeder) Duplex — Duplex unit * : When an optional paper feed device is not installed, the corresponding count is not displayed. **Clearing** 1. Select the counts to be cleared. [Cassette2] and [Cassette3] cannot be cleared. 2. Select the counts for all and press [Clear]. 3. Press the start key. The counter value is cleared. **Completion** Press the stop key. The screen for selecting a maintenance item No. is displayed.

Item No.	Description
U903	**Checking/clearing the paper jam counts** **Description** Displays or clears the jam counts by jam locations. **Purpose** To check the paper jam status. Also to clear the jam counts after replacing consumable parts. **Method** 1. Press the start key. 2. Select the item. **Method: [Cnt]** 1. Select [Cnt]. The count of jam code by type is displayed. Codes for which the count value is 0 are not displayed. 2. Change the screen using the cursor up/down keys. 3. Select the count value for jam code and press [Clear]. The individual counter cannot be cleared. 4. Press the start key. The counter value is cleared. **Method: [Total Cnt]** 1. Select [Total Cnt]. The total number of jam code by type is displayed. 2. Change the screen using the cursor up/down keys. The total number of jam count cannot be cleared. **Completion** Press the stop key. The screen for selecting a maintenance item No. is displayed.

Display	Description
Cnt	Displays/clears the jam counts
Total Cnt	Displays the total jam counts

Item No.	Description
U904	**Checking/clearing the call for service counts** **Description** Displays or clears the service call code counts by types. **Purpose** To check the service call code status by types. Also to clear the service call code counts after replacing consumable parts. **Method** 1. Press the start key. 2. Select the item. **Method: [Cnt]** 1. Select [Cnt]. The count for service call detection by type is displayed. Codes for which the count value is 0 are not displayed. 2. Change the screen using the cursor up/down keys. 3. Select the count value for service call code and press [Clear]. The individual counter cannot be cleared. 4. Press the start key. The counter value is cleared. **Method: [Total Cnt]** 1. Select [Total Cnt]. The total number of service call counts by type is displayed. 2. Change the screen using the cursor up/down keys. The total number of service call count cannot be cleared. **Completion** Press the stop key. The screen for selecting a maintenance item No. is displayed.

Display	Description
Cnt	Displays/clears the call for service counts
Total Cnt	Displays the total call for service counts

<table>
<tr><th>Item No.</th><th>Description</th></tr>
<tr><td>U905</td><td>

Checking counts by optional devices

Description
Displays the counts of document processor or document finisher.
Purpose
To check the use of document processor or document finisher.

Method
1. Press the start key.
2. Select the device to be checked. The count of the selected device is displayed.

Display	Description
DP	Counts of document processor
DF	Counts of document finisher

DP

Display	Description
ADP	Counts of single-sided originals that has passed through the DP
RADP	Counts of double-sided originals that has passed through the DP

DF

Display	Description
Sorter	Counts of copies that has passed through the sorter
Staple	Frequency the stapler has been activated

Completion
Press the stop key. The screen for selecting a maintenance item No. is displayed.

</td></tr>
<tr><td>U910</td><td>

Clearing the print coverage data

Description
Clears the accumulated data for the print coverage per A4 size paper.
Purpose
To clear data as required at times such as during maintenance service.

Method
1. Press the start key.
2. Select [Execute].
3. Press the start key. The print coverage data is cleared.

Completion
Press the stop key. The screen for selecting a maintenance item No. is displayed.

</td></tr>
</table>

Item No.	Description
U917	**Setting backup data reading/writing**

Description
Retrieves the backup data to a USB memory from the machine; or writes the data from the USB memory to the machine.
Purpose
To store and write data when replacing the HDD.

Method
1. Press the power key on the operation panel, and after verifying the power indicator has gone off, switch off the main power switch.
2. Insert USB memory in USB memory slot.
3. Turn the main power switch on.
   Wait for 10 seconds to allow the machine to recognize the USB memory.
4. Enter the maintenance item.
5. Press the start key.
6. Select [Export] or [Import] and press the start key.

Display	Description
Import	Writing data from the USB memory to the machine
Export	Retrieving from the machine to a USB memory

7. Select the item.

Display	Description	Depending data
Address Book	Address book	-
Job Account	Job accounting	-
One Touch	Information on one-touch key	Address book
User	User managements	Job accounting
Program	Program information	Job accountings and user manage-ments
Shortcut	Shortcut information	Job accountings, user managements and document box information
Document Box	Document box information	Job accountings and user manage-ments
Fax Forward	FAX transfer information	Job accountings, user managements and document box information
IC Card	IC Card information	-

* : Since data are dependent with each other, data other than those assigned are also retrieved or written in.

8. Select [On] using the cursor left/right keys.
9. Press the start key. Starts reading or writing.
   The progress of selected item is displayed in %.
   When an error occurs, the operation is canceled and an error code is displayed.
10. When normally completed, [Fin] is displayed.
11. Turn the main power switch off and on after completing writing when selecting [Import].

Item No.	Description
U917	**Error Codes**

Codes	Description	Codes	Description
e002	Parameter error	e31e	User managements error
e003	File write error	e31f	User managements open error
e004	File initialization error	e320	User managements error
e005	File error	e321	User managements open error
e006	Processing error	e322	User managements list error
e010	Address book clear error (contact)	e323	User managements list error
e011	Address book open error (contact)	e324	Shortcut open error
e012	Address book list error (contact)	e325	Shortcut list error
e013	Address book list error (contact)	e326	Shortcut list error
e014	Address book clear error (group)	e410	Box file open error
e015	Address book open error (group)	e411	Box error in writing
e016	Address book list error (group)	e412	Box error in reading
e017	Address book list error (group)	e413	Box list error
e110	Job accounting clear error	e414	Box list error
e111	Job accounting open error	e415	Box error
e112	Job accounting open error	e416	Box error
e113	Job accounting error in writing	e417	Box open error
e114	Job accounting list error	e418	Box close error
e115	Job accounting list error	e419	Box creation error
e210	One-touch open error	e41a	Box creation error
e211	One-touch list error	e41b	Box deletion error
e212	One-touch list error	e41c	Box movement error
e310	User managements backup error	e510	Program error in writing
e311	User managements clear error	e511	Program error in reading
e312	User managements open error	e710	Fax memory open error
e313	User managements open error	e711	Fax memory initialization error
e314	User managements open error	e712	Fax memory list error
e315	User managements error in writing	e713	Fax memory error
e316	User managements list error	e714	Fax memory error
e317	User managements list error	e715	Fax memory mode error
e318	User managements list error	e716	Fax memory error
e319	User managements list error	e717	Fax memory error
e31a	User managements open error	e718	Fax memory mode error
e31b	User managements error	e910	File reading error
e31c	User managements error	e911	File writing error
e31d	User managements open error	e912	Data mismatch

Item No.	Description
U917	**Error Codes**

Codes	Description	Codes	Description
e913	Log file open error	d008	File rename error
e914	Log file error in writing	d009	File open error
e915	Directory open error	d00a	File close error
e916	Directory error in reading	d00b	File reading error
e917	Synchronization error	d00c	File writing error
e918	Synchronization error	d00d	File copy error
d000	Unspecified error	d00e	File compressed error
d001	HDD unavailable	d00f	File decompressed error
d002	USB memory is not inserted	d010	Directory open error
d003	File for writing is not found in the USB	d011	Directory creation error
d004	File for reading is not found in the HDD	d012	File writing error
d005	USB error in writing	d013	File reading error
d006	USB error in reading	d014	File deletion error
d007	USB unmount error	d015	File copy error to the USB

Completion
Press the stop key. The screen for selecting a maintenance item No. is displayed.

U927

Clearing the all copy counts and machine life counts (one time only)

Description
Resets all of the counts back to zero.

Supplement
The total account counter and the machine life counter can be cleared only once if all count values are 1000 or less.

Method
1. Press the start key.
2. Select [Execute].
3. Press the start key. All copy counts and machine life counts are cleared.

Completion
Press the stop key. The screen for selecting a maintenance item No. is displayed.

Item No.	Description
U942	**Setting of deflection for feeding from DP** **Description** Adjusts the deflection generated when the document processor is used. **Purpose** Use this mode if an original non-feed jam, oblique feed or wrinkling of original occurs when the document processor is used. **Setting** 1. Press the start key. 2. Press the system menu key. 3. Place an original on the DP and press the start key to make a test copy. 4. Press the system menu key. 5. Select the item to be adjusted. 6. Change the setting value using the cursor left/right keys or numeric keys.l

Display	Description	Setting range	Initial setting	Change in value per step
Front	Deflection of DP paper feed motor (DPPFM)	-50 to 50	0	0.119 mm
Back	Deflection of DP switchback motor (DPSBM)	-50 to 50	0	0.119 mm

* : The greater the value, the larger the deflection; the smaller the value, the smaller the deflection.
If an original non-feed jam or oblique feed occurs, increase the setting value. If wrinkling of original occurs, decrease the value.

7. Press the start key. The value is set.

Completion
Press the stop key. The screen for selecting a maintenance item No. is displayed.

U984	**Checking the developing unit number** **Description** Displays the developing unit number. **Purpose** To check the developing unit number. **Method** 1. Press the start key. The developing unit number for each color is displayed.

Display	Description
C	Cyan developing unit number
M	Magenta developing unit number
Y	Yellow developing unit number
K	Black developing unit number

Completion
Press the stop key. The screen for selecting a maintenance item No. is displayed.

Item No.	Description
U985	**Displaying the developer history**

Description
Displays the past record of machine number and the developer counter.
Purpose
To check the count value of machine number and the developer counter.

Method
1. Press the start key.
2. Select the color to check.

Display	Description
C	Cyan developing unit past record
M	Magenta developing unit past record
Y	Yellow developing unit past record
K	Black developing unit past record

3. The history of a machine number and a developing counter for each color is displayed by three cases.

Display	Description
Machine History 1 - 3	Historical records of the machine number
Cnt History 1 - 3	Historical records of developer counter

Completion
Press the stop key. The screen for selecting a maintenance item No. is displayed.

1-3-2 Service mode

The machine is equipped with a maintenance function which can be used to maintain and service the machine.

(1) Printing the service status page

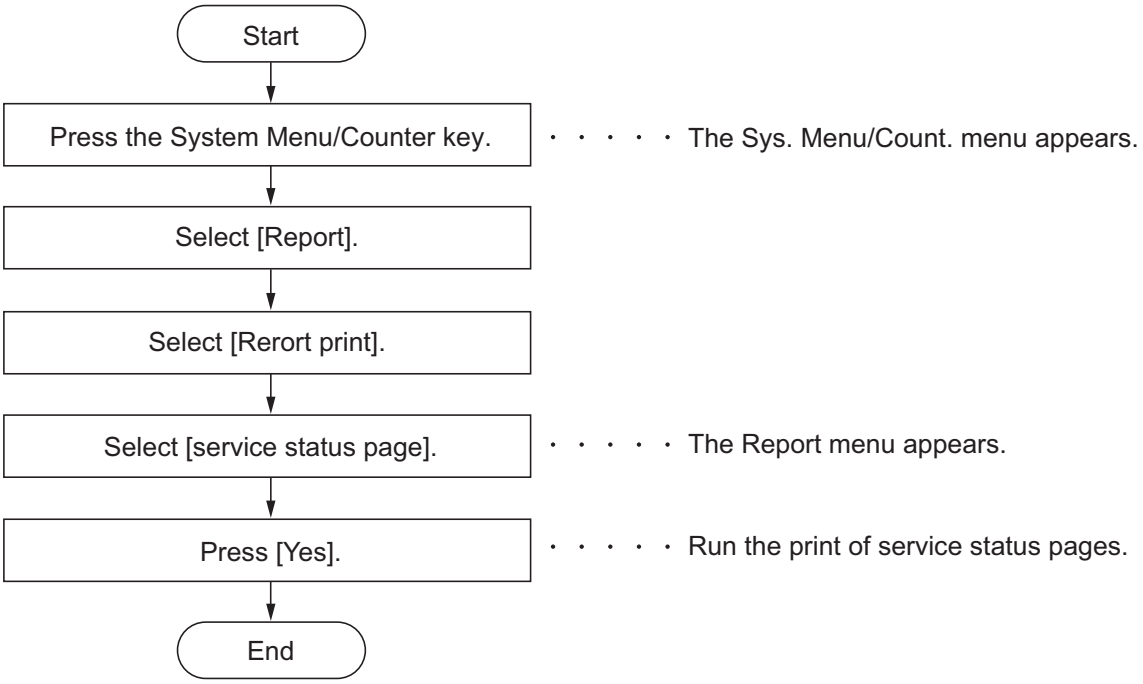

Service items	Description
Service Status	**Printing a status page for service purpose** **Description** Prints a status page for service purpose. The status page includes various settings and service cumulative. **Purpose** To acquire the current printing environmental parameters and cumulative information. **Method** 1. Select [Service status]. 2. Select [YES]. Two pages will be printed. **Completion** Press the System Menu/Counter key.

Service items	Description

Service status page (1)

Service Status Page

MFP

(2) 10/10/2010 12:00

(1) Firmware version 2KZ_2000.000.000 2010.10.10 (3) [XXXXXXXX] (4) [XXXXXXXX] (5) [XXXXXXXX]

Controller Information

Memory status

(7) Standard Size 128.0 KB
(8) Option Slot 128.0 KB
(9) Total Size 256.0 KB

Time

(10) Local Time Zone +01:00 Tokio
(11) Date and Time 10/10/2010 12:00
(12) Time Server 10.183.53.13

Installed Options

(13) Paper feeder Cassette
(14) Card Authentication Kit (B) Installed

Print Coverage

(15) Average(%) / Usage Page(A4/Letter Conversion)
(16) Total
K: 1.10 / 1111111.11
C: 2.20 / 2222222.22
M: 3.30 / 3333333.33
Y: 4.40 / 4444444.44
(17) Copy
K: 1.10 / 1111111.11
C: 2.20 / 2222222.22
M: 3.30 / 3333333.33
Y: 4.40 / 4444444.44
(18) Printer
K: 1.10 / 1111111.11
C: 2.20 / 2222222.22
M: 3.30 / 3333333.33
Y: 4.40 / 4444444.44
(19) FAX
K: 1.10 / 1111111.11
(20) Period (27/10/2009 - 03/11/2009 08:40)
(21) Last Page K/C/M/Y(%) 1.00 / 2.22 / 3.33 / 4.44

FAX Information

(22) Rings (Normal) 3
(23) Rings (FAX/TEL) 3
(24) Rings (TAD) 3
(25) Option DIMM Size 16 MB

(26) FRPO Status
User Top Margin A1+A2/100 0.00
User Left Margin A3+A4/100 0.00

PDF mode Y5 00

1 (6) [XXXXXXXXXXXXXXXX]

Figure 1-3-20

Service items	Description

Service status page (2)

Service Status Page

MFP 10/10/2010 12:00

Firmware version 2KZ_2000.000.000 2010.10.10 [XXXXXXXX] [XXXXXXXX] [XXXXXXXX]

Engine Information

(27) NVRAM Version _1F31225_1F31225
(28) FAX
FAX BOOT Version 2K3_5000.001.001
FAX APL Version 2K3_5100.001.001
FAX IPL Version 2K3_5200.001.001
(29) MAC Address 00:C0:EE:D0:01:0D
(30) DP Counters
Total 1234

Send Information

(31) Date and Time 10/10/10
(32) Address

1/2 (33) (34)
(35) 100/100
(36) 0/0/0/0/0
(37) 0/0/0/0/0
(38) 0/0/0/0/0/0/0/0/
(39) 0000000/0000000/0000000/0000000/0000000/0000000/
0000000/0000000/0000000/0000000/
F00/U00/0/0/0/0/30/30/70/70/0/0/abcde/1/0 (40) (41) (42) (43) (44) (45) (46) (47) (48) (49) (50) (51) (52) (53) (54)
(55) 0000/0000/0000/0000/0000/0000/0000/0000/0000/0000/0000/0000/0000/0000/0000/
0000/0000/0000/0000/0000/0000/0000/0000/0000/0000/
(56) 0000/0000/0000/0000/0000/0000/0000/0000/0000/0000/0000/0000/0000/0000/0000/0000/
0000/0000/0000/0000/0000/0000/0000/0000/0000/0000/0000/0000/0000/0000/0000/0000/
(57) 12345678/11223344/00001234abcd567800001234abcd5678/01234567890123456789012345678901/0008/00/07
12345678/11223344/00001234abcd567800001234abcd5678/01234567890123456789012345678901/0008/00/07
12345678/11223344/00001234abcd567800001234abcd5678/01234567890123456789012345678901/0008/00/07
12345678/11223344/00001234abcd567800001234abcd5678/01234567890123456789012345678901/0008/00/07
2KV_D100.001.005/0/ (58) (59)
[3NN_9000.001.016] (60)
[2KX_81BR.001.010] [ABCDEFGHIJ] [ABCDEFGHIJ] (61) (62) (63)
0000000000/F80C001A37/302A183C00/000100013D/8791BEC305/0000000000/0000000000/00 (64)
0/3/ (65) (66)
ABCDEFGHIJKL/ABCDEFGHIJKL/ABCDEFGHIJKL/ABCDEFGHIJKL/ (67)

2 [XXXXXXXXXXXXXXXX]

Figure 1-3-21

Service items	Description
	Detail of service status page

No.	Description	Supplement
(1)	Firmware version	-
(2)	System date	-
(3)	Engine soft version	-
(4)	Engine boot version	-
(5)	Operation panel mask version	-
(6)	Machine serial number	-
(7)	Standard memory size	-
(8)	Optional memory size	-
(9)	Total memory size	-
(10)	Local time zone	-
(11)	Report output date	Day/Month/Year hour:minute
(12)	NTP server name	-
(13)	Presence or absence of the optional paper feeder	Paper feeder 1/Paper feeder 2/Not Installed
(14)	Presence or absence of the optional IC card authentication kit	Installed/Not Installed/Trial
(15)	Page of relation to the A4/Letter	-
(16)	Average coverage for total	Black/Cyan/Magenta/Yellow
(17)	Average coverage for copy	Black/Cyan/Magenta/Yellow
(18)	Average coverage for printer	Black/Cyan/Magenta/Yellow
(19)	Average coverage for fax	Black/Cyan/Magenta/Yellow
(20)	Cleared date and output date	-
(21)	Coverage on the final output page	-
(22)	Number of rings	0 to 15
(23)	Number of rings before automatic switching	0 to 15
(24)	Number of rings before connecting to answering machine	0 to 15
(25)	Optional DIMM size	-
(26)	FRPO setting	-

Service items	Description

No.	Description	Supplement
(27)	NV RAM version	_ 1F3 1225 _ 1F3 1225 (a) (b) (c) (d) (e) (f) (a) Consistency of the present software version and the database _ (underscore): OK * (Asterisk): NG (b) Database version (c) The oldest time stamp of database version (d) Consistency of the present software version and the ME firmware version _ (underscore): OK * (Asterisk): NG (e) ME firmware version (f) The oldest time stamp of the ME database version Normal if (a) and (d) are underscored, and (b) and (e) are identical with (c) and (f).
(28)	Fax firmware version	-
(29)	Mac address	-
(30)	Number of original feed from DP	-
(31)	The last sent date and time	-
(32)	Transmission address	-
(33)	Destination information	-
(34)	Area information	-
(35)	Margin settings	Top margin/Left margin
(36)	Top offset for each paper source	MP tray/Paper feeder 1/Paper feeder 2/Duplex/ Page rotation
(37)	Left offset for each paper source	MP tray/Paper feeder 1/Paper feeder 2/Duplex/ Page rotation
(38)	Margin/Page length/Page width settings	Top margin integer part/Top margin decimal part/ Left margin integer part/Left margin decimal part/ Page length integer part/Page length decimal part/ Page width integer part/Page width decimal part
(39)	Life counter (The first line)	Machine life/MP tray/Cassette/Paper feeder 1/ Paper feeder 2 /Duplex
	Life counter (The second line)	Drum unit K/Drum unit C/Drum unit M/Drum unit Y/ Intermediate transfer unit/Developer unit K/ Developer unit C/Developer unit M/Developer unit Y/Maintenance kit
(40)	Panel lock information	0: OFF/1: Partial lock/2: Full lock

Service items	Description

No.	Description	Supplement
(41)	USB information	U00: Not installed/U01: Full speed/U02: Hi speed
(42)	Paper handling information	0: Paper source unit select/1: Paper source unit
(43)	Color printing double count mode	0: All single counts 3: Folio, Single count, Less than 330 mm (length)
(44)	Black and white printing double count mode	0: All single counts 3: Folio, Single count, Less than 330 mm (length)
(45)	Billing counting timing	-
(46)	Temperature (machine inside)	-
(47)	Temperature (machine outside)	-
(48)	Relative temperature (machine outside)	-
(49)	Absolute temperature (machine outside)	-
(50)	Thermistor temperature (LSU)	-
(51)	Thermistor temperature (LSU2)	-
(52)	Fixed assets number	-
(53)	Job end judgment time-out time	-
(54)	Job end detection mode	-
(55)	Media type attributes 1 to 28 (Not used: 18, 19, 20)	Weight settings 0: Light 1: Normal 1 2: Normal 2 3: Normal 3 4: Heavy 1 5: Heavy 2 6: Heavy 3 7: Extra Heavy Fuser settings 0: High 1: Middle 2: Low 3: Vellum Duplex settings 0: Disable 1: Enable
(56)	IO calibration information	-
(57)	RFID information	-
(58)	RFID reader/writer version information	-
(59)	Toner install mode information	0: Off t: On
(60)	Soft version of the optional paper feeder	Paper feeder 1/Paper feeder 2
(61)	Version of the optional message	-

Service items	Description

No.	Description	Supplement
(62)	Version of the color table	-
(63)	Version of second color table	-
(64)	Maintenance information	-
(65)	Altitude	0: Standard 1: High altitude 1 2: High altitude 2
(66)	Charger roller correction	1 to 5
(67)	Drum serial number	Black/Cyan/Magenta/Yellow

Code conversion

A	B	C	D	E	F	G	H	I	J
0	1	2	3	4	5	6	7	8	9

(2) Executing a service mode

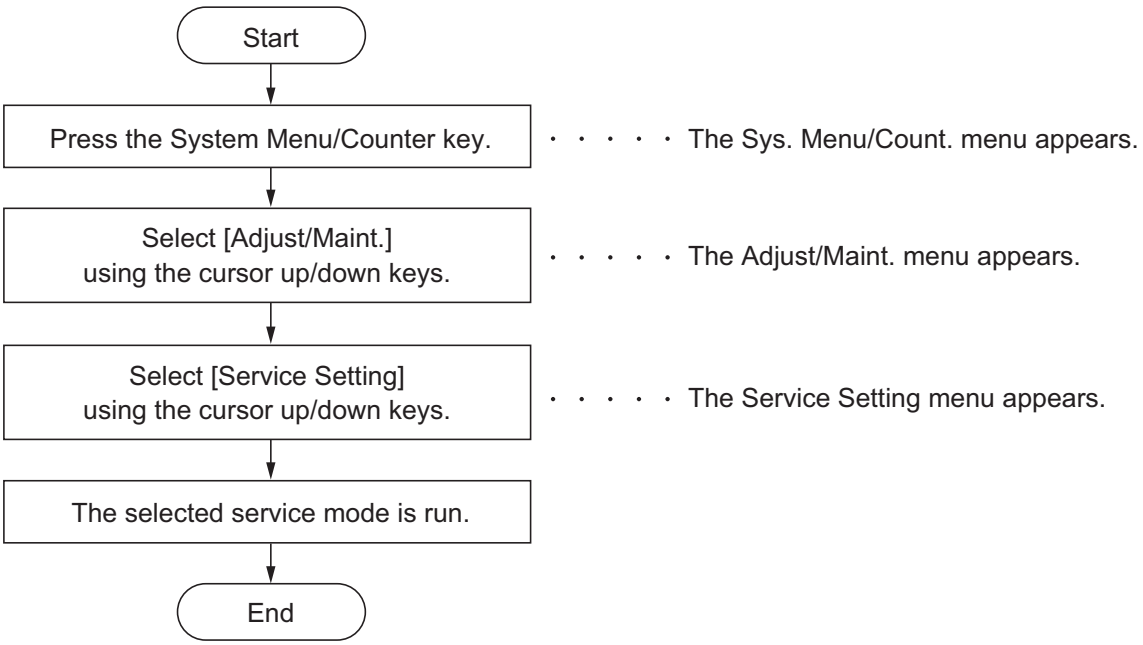

(3) Description of service mode

Service items	Description
Enable Repaired Unit	**Release the disconnection of the cassette and the document feeder.** **Description** Restore the system control when the defective unit is replaced to enable the unit. The menu is displayed only when the unit is detached for failure. **Purpose** Perform when the defective unit is replaced. **Method** 1. Enter the service menu. 2. Select [Enable Repaired Unit]. 3. Press [Start]. **Completion** The unit is automatically powered after execution.

Service items	Description
Maintenance (A)	**Reset the counter of the maintenance kit(A).** **Description** Reset the kit counter when replacing the maintenance kit. The menu is displayed only when replacing the maintenance kit. **Purpose** Perform when the maintenance kit is replaced. **Method** 1. Enter the service menu. 2. Select [Maintenance (A)]. 3. Press [Start]. **Completion** Automatically completes when the confirmation display is shown.
Maintenance (B)	**Reset the counter of the maintenance kit(B).** **Description** Reset the kit counter when replacing the maintenance kit. The menu is displayed only when replacing the maintenance kit. **Purpose** Perform when the maintenance kit is replaced. **Method** 1. Enter the service menu. 2. Select [Maintenance (B)]. 3. Press [Start]. **Completion** Automatically completes when the confirmation display is shown.

Service items	Description
Center line alighment	**Alignment of the cassette and MP tray and duplex** **Description** Perform settings for the center line adjustment. **Purpose** Perform if the alignment has not been obtained after the center line adjustment. **Method** 1. Enter the service menu. 2. Select [Center Line Adjustment]. 3. Press [Save]. **Completion** Press the Save key in the setting display.
Developer	Perform the toner installation of the developer unit. **Description** Perform the toner installation when the developer unit has been replaced. **Purpose** Perform when the developer unit is replaced. **Method** 1. Enter the service menu. 2. Select [Developer unit]. 3. Press [Start] in the confirmation display. **Completion** The toner installation is performed when power is turned on and off.

Service items	Description
FAX country code	**FAX Country Code** **Description** Initializes software switches and all data in the backup data on the FAX control PWB, according to the destination. **Purpose** To initialize the FAX control PWB. **Method** 1. Enter the Service Setting menu. 2. Select [FAX Country Code] using the cursor up/down keys. 3. Press the start key. 4. Enter a destination code using the numeric keys. 5. Press the start key. The setting is set. 6. Press the start key. Data initialization starts. **Destination code list**

Code	Destination	Code	Destination
000	Japan	253	CTR21 (European nations)
009	Australia		Italy
038	China		Germany
080	Hong Kong		Spain
084	Indonesia		U.K.
088	Israel		Netherlands
097	Korea		Sweden
108	Malaysia		France
126	New Zealand		Austria
136	Peru		Switzerland
137	Philippines		Belgium
152	Middle East		Denmark
156	Singapore		Finland
159	South Africa		Portugal
169	Thailand		Ireland
181	U.S.A.		Norway
242	South America	254	Taiwan
243	Saudi Arabia		

Completion
Press the stop key.

Service items	Description
FAX call Setting	**FAX call setting** **Description** Selects if a fax is to be connected to either a PBX or public switched telephone network. Selects the mode to connect an outside call when connected to a PBX. Access code registration for connection to PSTN. **Purpose** To be executed as required. **Method** 1. Enter the Service Setting menu. 2. Select [FAX Call Set.] using the cursor up/down keys. 3. Press the start key. **Display** / **Description** Exchange Select. — Setting the connection to PBX/PSTN PBX Setting — Setting for a PBX Dial No. to PSTN — Setting access code to PSTN **Setting the connection to PBX/PSTN** 1. Select [Exchange Select.] using the cursor up/down keys. 2. Press the start key. 3. Select [PBX] or [PSTN] using the cursor up/down keys. 4. Press the start key. The setting is set. **Setting for PBX** 1. Select [PBX Setting] using the cursor up/down keys. 2. Press the start key. 3. Select [Loop], [Flash] or [Earth] using the cursor up/down keys. 4. Press the start key. The setting is set. **Setting access code to PSTN** 1. Select [Dial No. to PSTN] using the cursor up/down keys. 2. Press the start key. 3. Enter access code using the numeric keys. (0 to 9, 00 to 99) 4. Press the start key. The setting is set. **Completion** Press the stop key.

1-4-1 Paper misfeed detection

(1) Paper misfeed indication

When a paper misfeed occurs, the machine immediately stops copying and displays the jam location on the operation panel.
Paper misfeed counts sorted by component can be checked by maintenance item U903.
To remove the paper jammed in the machine, open the right cover and pull the cassette out.
To remove the original jammed in DP or the document finisher, open the top cover.
Paper misfeed can be reset by opening and closing the respective covers.

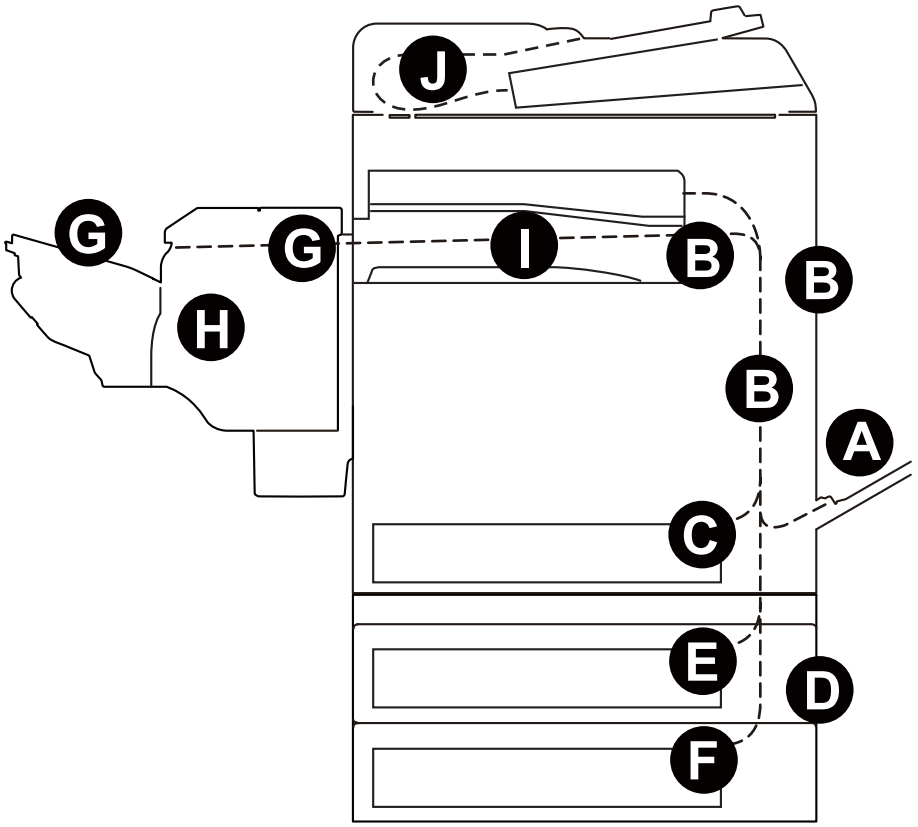

Figure 1-4-1

(A) Misfeed in the MP tray
(B) Misfeed in right cover 1
(C) Misfeed in cassette 1
(D) Misfeed in right cover 3
(E) Misfeed in cassette 2
(F) Misfeed in cassette 3
(G) Misfeed in the document finisher
(H) Stapler problem
(I) Misfeed in the bridge
(J) Misfeed in the document processor

(2) Paper misfeed detection component

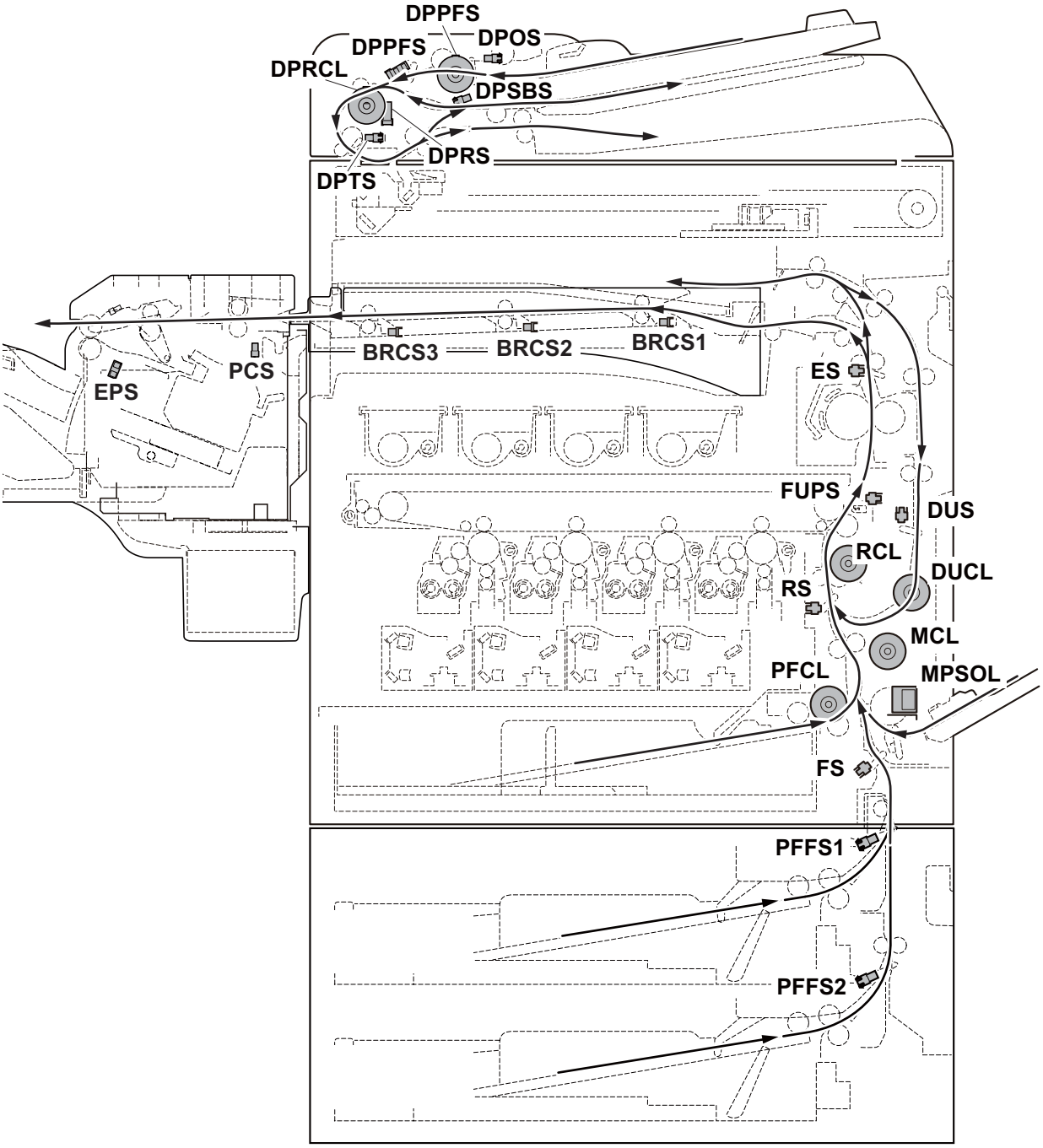

Figure 1-4-2

Code	Contents	Conditions	Jam location*
0000	Initial jam	The power is turned on when a sensor in the conveying system is on.	-
0100	Secondary paper feed request time out	Secondary paper feed request given by the controller is unreachable.	B
0101	Waiting for process package to be ready	Process package won't be ready.	B
0104	Waiting for conveying package to be ready	Conveying package won't be ready.	B
0106	Paper feeding request for duplex printing time out	Paper feeding request for duplex printing given by the controller is unreachable.	B
0107	Waiting for fuser package to be ready	Fuser package won't be ready.	-
0110	Right cover open	The right cover is opened during printing.	-
0111	Front cover open	The front cover is opened during printing.	-
0120	Receiving a duplex paper feeding request while paper is empty	Paper feed request was received from the duplex section despite the absence of paper in the duplex section.	B
0121	Exceeding number of duplex pages circulated	The controller issued the duplex section a request for more pages than the duplex print cycle contains.	B
0210	Right lower cover open	The right lower cover is opened during printing.	-
0501	No paper feed from cassette 1	The registration sensor (RS) does not turn on during paper feed from cassette 1.	C
0502	No paper feed from cassette 2	PF feed sensor 1 (PFFS1) does not turn on during paper feed from cassette 2 (Retry 1 times).	E
0503	No paper feed from cassette 3	PF feed sensor 2 (PFFS2) does not turn on during paper feed from cassette 3 (Retry 1 times).	F
0508	No paper feed from duplex section	The registration sensor (RS) does not turn on during paper feed from the duplex section.	B
0509	No paper feed from MP tray	The registration sensor (RS) does not turn on during paper feed from the MP tray.	A
0511	Multiple sheets in cassette 1	The registration sensor (RS) does not turn off during paper feed from cassette 1.	C
0512	Multiple sheets in cassette 2	PF feed sensor 1 (PFFS1) does not turn off during paper feed from cassette 2.	E
0513	Multiple sheets in cassette 3	PF feed sensor 2 (PFFS2) does not turn off during paper feed from cassette 3.	F
0518	Multiple sheets in duplex section	The registration sensor (RS) does not turn off during paper feed from the duplex section.	B
0519	Multiple sheets in MP tray	The registration sensor (RS) does not turn off during paper feed from theMP tray.	A

*: Refer to figure 1-4-1 for paper jam location (see page 1-4-1).

Code	Contents	Conditions	Jam location*
1403	PF feed sensor 1 non arrival jam	PF feed sensor 1 (PFFS1) does not turn on during paper feed from cassette 3.	D
1413	PF feed sensor 1 stay jam	PF feed sensor 1 (PFFS1) does not turn off during paper feed from cassette 3.	D
4002	Registration sensor non arrival jam	The registration sensor (RS) does not turn on during paper feed from cassette 2.	D
4003		The registration sensor (RS) does not turn on during paper feed from cassette 3.	D
4012	Registration sensor stay jam	The registration sensor (RS) does not turn off during paper feed from cassette 2.	D
4013		The registration sensor (RS) does not turn off during paper feed from cassette 3.	D
4101	Fuser pre sensor non arrival jam	The fuser pre sensor (FUPS) does not turn on during paper feed from cassette 1.	B
4102		The fuser pre sensor (FUPS) does not turn on during paper feed from cassette 2.	B
4103		The fuser pre sensor (FUPS) does not turn on during paper feed from cassette 3.	B
4109		The fuser pre sensor (FUPS) does not turn on during paper feed from duplex section.	B
4110		The fuser pre sensor (FUPS) does not turn on during paper feed from MP tray.	B
4111	Fuser pre sensor stay jam	The fuser pre sensor (FUPS) does not turn off during paper feed from cassette 1.	B
4112		The fuser pre sensor (FUPS) does not turn off during paper feed from cassette 2.	B
4113		The fuser pre sensor (FUPS) does not turn off during paper feed from cassette 3.	B
4118		The fuser pre sensor (FUPS) does not turn off during paper feed from the duplex section.	B
4119		The fuser pre sensor (FUPS) does not turn off during paper feed from the MP tray.	B

*: Refer to figure 1-4-1 for paper jam location (see page 1-4-1).

Code	Contents	Conditions	Jam location*
4201	Eject sensor non arrival jam	The eject sensor (ES) does not turn on during paper feed from cassette 1.	B
4202		The eject sensor (ES) does not turn on during paper feed from cassette 2.	B
4203		The eject sensor (ES) does not turn on during paper feed from cassette 3.	B
4208		The eject sensor (ES) does not turn on during paper feed from duplex section.	B
4209		The eject sensor (ES) does not turn on during paper feed from MP tray.	B
4211	Eject sensor stay jam	The eject sensor (ES) does not turn off during paper feed from cassette 1.	B
4212		The eject sensor (ES) does not turn off during paper feed from cassette 2.	B
4213		The eject sensor (ES) does not turn off during paper feed from cassette 3.	B
4218		The eject sensor (ES) does not turn off during paper feed from the duplex section.	B
4219		The eject sensor (ES) does not turn off during paper feed from the MP tray.	B
4301	Duplex sensor non arrival jam	The duplex sensor (DUS) does not turn on during paper feed from cassette 1.	B
4302		The duplex sensor (DUS) does not turn on during paper feed from cassette 2.	B
4303		The duplex sensor (DUS) does not turn on during paper feed from cassette 3.	B
4309		The duplex sensor (DUS) does not turn on during paper feed from the MP tray.	B
4311	Duplex sensor stay jam	The duplex sensor (DUS) does not turn off during paper feed from cassette 1.	B
4312		The duplex sensor (DUS) does not turn off during paper feed from cassette 2.	B
4313		The duplex sensor (DUS) does not turn off during paper feed from cassette 3.	B
4319		The duplex sensor (DUS) does not turn off during paper feed from the MP tray.	B

*: Refer to figure 1-4-1 for paper jam location (see page 1-4-1).

Code	Contents	Conditions	Jam location*
4901	Bridge conveying sensor 1 non arrival jam	The bridge conveying sensor 1 (BRCS1) does not turn on during paper feed from cassette 1.	B
4902		The bridge conveying sensor 1 (BRCS1) does not turn on during paper feed from cassette 2.	B
4903		The bridge conveying sensor 1 (BRCS1) does not turn on during paper feed from cassette 3.	B
4908		The bridge conveying sensor 1 (BRCS1) does not turn on during paper feed from duplex section.	B
4909		The bridge conveying sensor 1 (BRCS1) does not turn on during paper feed from the MP tray.	B
4911	Bridge conveying sensor 1 stay jam	The bridge conveying sensor 1 (BRCS1) does not turn off during paper feed from cassette 1.	I
4912		The bridge conveying sensor 1 (BRCS1) does not turn off during paper feed from cassette 2.	I
4913		The bridge conveying sensor 1 (BRCS1) does not turn off during paper feed from cassette 3.	I
4918		The bridge conveying sensor 1 (BRCS1) does not turn off during paper feed from duplex section.	I
4919		The bridge conveying sensor 1 (BRCS1) does not turn off during paper feed from the MP tray.	I
5001	Bridge conveying sensor 3 non arrival jam	The bridge conveying sensor 3 (BRCS3) does not turn on during paper feed from cassette 1.	I
5002		The bridge conveying sensor 3 (BRCS3) does not turn on during paper feed from cassette 2.	I
5003		The bridge conveying sensor 3 (BRCS3) does not turn on during paper feed from cassette 3.	I
5008		The bridge conveying sensor 3 (BRCS3) does not turn on during paper feed from the duplex section.	I
5009		The bridge conveying sensor 3 (BRCS3) does not turn on during paper feed from theMP tray.	I
5011	Bridge conveying sensor 3 stay jam	The bridge conveying sensor 3 (BRCS3) does not turn off during paper feed from cassette 1.	I
5012		The bridge conveying sensor 3 (BRCS3) does not turn off during paper feed from cassette 2.	I
5013		The bridge conveying sensor 3 (BRCS3) does not turn off during paper feed from cassette 3.	I
5018		The bridge conveying sensor 3 (BRCS3) does not turn off during paper feed from duplex section.	I
5019		The bridge conveying sensor 3 (BRCS3) does not turn off during paper feed from the MP tray.	I

*: Refer to figure 1-4-1 for paper jam location (see page 1-4-1).

Code	Contents	Conditions	Jam location*
6023	Staple cover open	The staple cover is opened during operation.	G
6043	DF top cover open	The DF top cover is opened during operation.	G
6103	DF paper conveying sensor non arrival jam	The paper conveying sensor (PCS) does not turned on even if a specified time has elapsed after the machine eject signal was received.	I
6113	DF paper conveying sensor stay jam	The paper conveying sensor (PCS) does not turn off within the specified time of its turning on.	G
6123	DF paper conveying sensor remaining jam	The paper conveying sensor (PCS) does not turned on when the power is turned on or the cover is closed.	G
6413	DF eject paper sensor stay jam	The eject paper sensor (EPS) does not turn off within the specified time.	G
6423	DF eject paper sensor remaining jam	The eject paper sensor (EPS) does not turned on when the power is turned on or the cover is closed.	G
6803	Front adjustment plate operation ON error	The adjustment sensor 1 (ADS1) does turned on when the job is executed.	H
6813	Front adjustment plate operation OFF error	The adjustment sensor 1 (ADS1) does not turned off when the job is executed.	H
6903	Rear adjustment plate operation ON error	The adjustment sensor 2 (ADS2) does not turned on when the job is executed.	H
6913	Rear adjustment plate operation OFF error	The adjustment sensor 2 (ADS2) does not turned off when the job is executed.	H
7013	Staple operation error	The next staple hasn't head-poked for the next copy to bind after a predetermined interval while clinching has commenced.	H
7023	Staple initial operation error	Head-poking has not been accomplished after 10 attempts in the initialization at power up or closing the cover.	H
7913	Sequence error 1 (operation prohibited)	Operation commenced in the state the finisher is prohibited to operate.	G
7923	Sequence error 2 (initialoperation error)	A request for maintenance mode has occurred in the state the finisher is prohibited to operate or has commenced operation.	G
7933	Sequence error 3 (Error in the reception of backup data)	A backup data command has been received in the state the operation has initiated.	G
7943	Sequence error 4 (standby)	Operation has started in the state standby is prohibited.	G
7953	Sequence error 5 (Error in between copies)	An illegal inter-page or inter-copy interval has occurred.	G

*: Refer to figure 1-4-1 for paper jam location (see page 1-4-1).

Code	Contents	Conditions	Jam location*
7963	Sequence error 6	The finisher does not deliver the eject-complete command in 15 seconds after the bridge eject sensor is turned off.	G
9001	DP original conveying jam	DP timing sensor (DPTS) turns off within the specified time since the sensor turns on.	J
9004	DP original switchback jam	During duplex switchback scanning, the DP registration sensor (DPRS) does not turn on within specified time of the DP timing sensor (DPTS) turning off.	J
9010	DP open	The DP is opened during original feeding. Sensor in the conveying system is on when the power is turned on or the cover is closed.	-
9011	DP top cover open	The DP top cover is opened during original feeding.	-
9110	DP paper feed sensor stay jam	The DP paper feed sensor (DPPFS) or DP registration sensor (DPRS) does not turn off within the specified time of the DP timing sensor (DPTS) turning on.	J
9200	DP registration sensor non arrival jam	The DP registration sensor (DPRS) does not turn on within the specified time of the DP paper feed sensor (DPPFS) turning on.	J
9400	DP timing sensor non arrival jam	The DP timing sensor (DPTS) does not turn on within the specified time of the DP registration sensor (DPRS) turning on (Retry 5 times).	J
9410	DP timing sensor stay jam	The DP timing sensor (DPTS) does not turned off within the specified time its turning on.	J

*: Refer to figure 1-4-1 for paper jam location (see page 1-4-1).

1-4-2 Self-diagnostic function

(1) Self-diagnostic function

This machine is equipped with self-diagnostic function. When a problem is detected, the machine stops printing and display an error message on the operation panel. An error message consists of a message prompting a contact with service personnel and a four-digit error code indicating the type of the error.

(2) Self-diagnostic codes

If the part causing the problems not designated as a service part, replace the assembly comprising the part.

Code	Contents	Causes	Check procedures/ corrective measures
0030	**FAX control PWB system error** Processing with the fax software was disabled due to a hardware problem.	Defective FAX control PWB.	Replace the fax control PWB and check for correct operation.
0070	**FAX control PWB incompatible detection error** In the initial communication with the FAX control PWB, the normal communication command is not transmitted.	Defective FAX software.	Install the fax software.
		Defective FAX control PWB.	Replace the fax control PWB and check for correct operation.
0100	**Backup memory device error**	Defective flash memory.	Replace the main PWB and check for correct operation (see page 1-5-30).
		Defective main PWB.	
0120	**MAC address data error** The data includes an invalid MAC address.	Defective flash memory.	Replace the main PWB and check for correct operation (see page 1-5-30).
		Defective engine PWB.	Replace the engine PWB and check for correct operation (see page 1-5-31).
0130	**Backup memory read/write error (main PWB)**	Defective flash memory.	Replace the main PWB and check for correct operation (see page 1-5-30).
		Defective main PWB.	
0140	**Backup memory data error (main PWB)**	Defective flash memory.	Replace the main PWB and check for correct operation (see page 1-5-30).
		Defective main PWB.	

Code	Contents	Causes	Check procedures/ corrective measures
0150	**Backup memory read/write error (engine PWB)** Detecting engine PWB EEPROM communication error.	The engine PWB EEPROM was improperly installed.	Check the EEPROM is properly installed and remedy if necessary.
		Defective engine PWB.	Replace the engine PWB and check for correct operation (see page 1-5-31).
		Defective EEPROM.	Contact the Service Administrative Division.
0160	**Backup memory data error (engine PWB)**	Defective flash memory.	Replace the engine PWB and check for correct operation (see page 1-5-31).
		Defective engine PWB.	
0170	**Billing counting error** A checksum error is detected in the main and engine backup memories for the billing counters.	Data in the EEPROM .	Contact the Service Administrative Division.
		Defective PWB.	Replace the main PWB or the engine PWB and check for correct operation (see page 1-5-30, 1-5-31).
0180	**Machine number mismatch** Machine number of main and engine does not match.	Data in the EEPROM .	Contact the Service Administrative Division.
0320	**I/O CPU communication error** A communication error is detected 10 times in succession.	Defective PWB.	Replace the main PWB or the engine PWB and check for correct operation. (see page 1-5-30,1-5-31)
0800	**Image processing error** The JAM100 fee counter is continuously generated.	Defective main PWB.	Replace the main PWB and check for correct operation (see page 1-5-30).
0830	**FAX control PWB flash program area checksum error** A checksum error occurred with the program of the FAX control PWB.	Defective FAX software.	Install the fax software.
		Defective FAX control PWB.	Replace the FAX control PWB.
0840	**Faults of RTC** The time is judged to go back based on the comparison of the RTC time and the current time or five years or more have passed.	The battery is disconnected from the main PWB.	Check visually and remedy if necessary
		Defective main PWB.	Replace the main PWB and check for correct operation (see page 1-5-30).

Code	Contents	Causes	Check procedures/ corrective measures
0870	**FAX control PWB to main PWB high capacity data transfer error** High-capacity data transfer between the FAX control PWB and the main PWB of the machine was not normally performed even if the data transfer was retried the specified times.	Improper installation FAX control PWB.	Reinstall the FAX control PWB.
		Defective FAX control PWB or main PWB.	Replace the FAX control PWB or main PWB and check for correct operation (see page 1-5-30).
0920	**Fax file system error** The backup data is not retained for file system abnormality of flash memory of the FAX control PWB.	Defective FAX control PWB.	Replace the FAX control PWB and check for correct operation.
1010	**Lift motor error** After cassette 1 is inserted, the lift sensor does not turn on within 12 s. This error is detected four times successively.	Defective bottom plate elevation mechanism in the cassette.	Check to see if the bottom plate can move smoothly and repair any problem that is found.
		Defective connector cable or poor contact in the connector.	Reinsert the connector. Also check for continuity of the connector cable. If necessary, replace the cable. Lift motor and engine PWB (YC1)
		Defective drive transmission system of the lift motor.	Check if the gears rotate smoothly. If not, grease the bushes and gears. Check for broken gears and replace if necessary.
		Defective lift motor.	Replace the lift motor.
		Defective engine PWB.	Replace the engine PWB and check for correct operation (see page 1-5-31).

Code	Contents	Causes	Check procedures/ corrective measures
1020	**PF lift motor 1 error (paper feeder)** After cassette 2 is inserted, PF lift sensor 1 does not turn on within 12 s. This error is detected four times successively.	Defective bottom plate elevation mechanism in the cassette.	Check to see if the bottom plate can move smoothly and repair any problem that is found.
		Defective connector cable or poor contact in the connector.	Reinsert the connector. Also check for continuity of the connector cable. If necessary, replace the cable. PF lift motor 1 and PF main PWB (YC4)
		Defective drive transmission system of the PF lift motor 1.	Check if the gears rotate smoothly. If not, grease the bushes and gears. Check for broken gears and replace if necessary.
		Defective PF lift motor 1.	Replace the PF lift motor 1.
		Defective PF main PWB.	Replace the PF main PWB (Refer to the service manual of the paper feeder).
1030	**PF lift motor 2 error (paper feeder)** After cassette 3 is inserted, PF lift sensor 2 does not turn on within 12 s. This error is detected four times successively.	Defective bottom plate elevation mechanism in the cassette.	Check to see if the bottom plate can move smoothly and repair it if any problem is found.
		Defective connector cable or poor contact in the connector.	Reinsert the connector. Also check for continuity of the connector cable. If necessary, replace the cable. PF lift motor 2 and PF main PWB (YC7)
		Defective drive transmission system of the PF lift motor 2.	Check if the gears rotate smoothly. If not, grease the bushes and gears. Check for broken gears and replace if any.
		Defective PF lift motor 2.	Replace the PF lift motor 2.
		Defective PF main PWB.	Replace the PF main PWB (Refer to the service manual of the paper feeder).

Code	Contents	Causes	Check procedures/ corrective measures
1800	**Paper feeder communication error** A communication error is detected 10 times in succession.	Improper installation of the paper feeder.	Follow the installation instruction carefully again.
		Defective connector cable or poor contact of the connector.	Reinsert the connector. Also check for continuity of the connector cable. If necessary, replace the cable. PF main PWB (YC3) and engine PWB (YC20)
		Defective engine PWB.	Replace the engine PWB and check for correct operation (see page 1-5-31).
		Defective PF main PWB.	Replace the PF main PWB (Refer to the service manual of the paper feeder).
1900	**Paper feeder EEPROM error** When writing the data, the write data and the read data is not continuously in agreement 4 times.	Defective PF main PWB.	Replace the PF main PWB (Refer to the service manual of the paper feeder).
		Device damage of EEPROM.	Contact the Service Administrative Division.
1950	**Transfer belt unit EEPROM error** No response is issued from the device in reading/writing for 5 ms or more and this problem is repeated five times successively. Mismatch of reading data from two locations occurs eight times successively. Mismatch between writing data and reading data occurs eight times successively.	Defective transfer PWB.	Replace the transfer PWB and check for correct operation.
		Device damage of EEPROM.	Contact the Service Administrative Division.
2101	**Developer motor K steady-state error** The rated speed signal detected the stability OFF continuously for 1 s after the developer motor K stabilizes.	Defective connector cable or poor contact in the connector.	Reinsert the connector. Also check for continuity of the connector cable. If necessary, replace the cable. Developer motor K and engine PWB (YC4)
		Defective drive transmission system.	Check if the rollers and gears rotate smoothly. If not, grease the bushings and gears. Check for broken gears and replace if necessary.
		Defective motor.	Replace the Developer motor K.
		Defective PWB.	Replace the engine PWB and check for correct operation (see page 1-5-31).

Code	Contents	Causes	Check procedures/ corrective measures
2102	**Developer motor YCM steady-state error** The rated speed signal detected the stability OFF continuously for 1 s after the developer motor YCM stabilizes.	Defective connector cable or poor contact in the connector.	Reinsert the connector. Also check for continuity within the connector cable. If none, replace the cable. Developer motor YCM and engine PWB (YC3)
		Defective drive transmission system.	Check if the rollers and gears rotate smoothly. If not, grease the bushings and gears. Check for broken gears and replace if any.
		Defective motor.	Replace the Developer motor YCM.
		Defective PWB.	Replace the engine PWB and check for correct operation (see page 1-5-31).
2111	**Developer motor K startup error** Developer motor K is not stabilized within 2 s since the motor is activated.	Defective connector cable or poor contact in the connector.	Reinsert the connector. Also check for continuity of the connector cable. If necessary, replace the cable. Developer motor K and engine PWB (YC4)
		Defective drive transmission system.	Check if the rollers and gears rotate smoothly. If not, grease the bushings and gears. Check for broken gears and replace if necessary.
		Defective motor.	Replace the Developer motor K.
		Defective PWB.	Replace the engine PWB and check for correct operation (see page 1-5-31).
2112	**Developer motor YCM startup error** Developer motor YCM is not stabilized within 2 s since the motor is activated.	Defective connector cable or poor contact in the connector.	Reinsert the connector. Also check for continuity within the connector cable. If necessary, replace the cable. Developer motor YCM and engine PWB (YC4)
		Defective drive transmission system.	Check if the rollers and gears rotate smoothly. If not, grease the bushings and gears. Check for broken gears and replace if necessary.
		Defective motor.	Replace the Developer motor YCM.
		Defective PWB.	Replace the engine PWB and check for correct operation (see page 1-5-31).

Code	Contents	Causes	Check procedures/ corrective measures
2201	**Drum motor K steady-state error** The rated speed signal detected the stability OFF continuously for 1 s after the drum motor K stabilizes.	Defective connector cable or poor contact in the connector.	Reinsert the connector. Also check for continuity within the connector cable. If none, replace the cable. Drum motor K and engine PWB (YC3)
		Defective drive transmission system.	Check if the rollers and gears rotate smoothly. If not, grease the bushings and gears. Check for broken gears and replace if any.
		Defective motor.	Replace the Drum motor K.
		Defective PWB.	Replace the engine PWB and check for correct operation (see page 1-5-31).
2202	**Drum motor YCM steady-state error** The rated speed signal detected the stability OFFcontinuously for 1 s after the drum motor YCM stabilizes.	Defective connector cable or poor contact in the connector.	Reinsert the connector. Also check for continuity within the connector cable. If none, replace the cable. Drum motor YCM and engine PWB (YC3)
		Defective drive transmission system.	Check if the rollers and gears rotate smoothly. If not, grease the bushings and gears. Check for broken gears and replace if any.
		Defective motor.	Replace the Drum motor YCM.
		Defective PWB.	Replace the engine PWB and check for correct operation (see page 1-5-31).
2211	**Drum motor K startup error** Drum motor K is not stabilized within 2 s since the motor is activated.	Defective connector cable or poor contact in the connector.	Reinsert the connector. Also check for continuity within the connector cable. If none, replace the cable. Drum motor K and engine PWB (YC3)
		Defective drive transmission system.	Check if the rollers and gears rotate smoothly. If not, grease the bushings and gears. Check for broken gears and replace if any.
		Defective motor.	Replace the Drum motor K.
		Defective PWB.	Replace the engine PWB and check for correct operation (see page 1-5-31).
2212	**Drum motor YCM startup error** Drum motor YCM is not stabilized within 2 s since the motor is activated.	Defective connector cable or poor contact in the connector.	Reinsert the connector. Also check for continuity within the connector cable. If none, replace the cable. Drum motor YCM and engine PWB (YC3)
		Defective drive transmission system.	Check if the rollers and gears rotate smoothly. If not, grease the bushings and gears. Check for broken gears and replace if any.
		Defective motor.	Replace the Drum motor YCM.
		Defective PWB.	Replace the engine PWB and check for correct operation (see page 1-5-31).

Code	Contents	Causes	Check procedures/ corrective measures
2300	**Fuser motor steady-state error** The rated speed signal detected the stability OFF continuously for 1 s after the fuser motor stabilizes.	Defective connector cable or poor contact in the connector.	Reinsert the connector. Also check for continuity within the connector cable. If none, replace the cable. Fuser motor and engine PWB (YC4)
		Defective drive transmission system.	Check if the rollers and gears rotate smoothly. If not, grease the bushings and gears. Check for broken gears and replace if any.
		Defective motor.	Replace the Fuser motor.
		Defective PWB.	Replace the engine PWB and check for correct operation (see page 1-5-31).
2310	**Fuser motor startup error** Fuser motor is not stabilized within 2 s since the motor is activated.	Defective connector cable or poor contact in the connector.	Reinsert the connector. Also check for continuity within the connector cable. If none, replace the cable. Fuser motor and engine PWB (YC3)
		Defective drive transmission system.	Check if the rollers and gears rotate smoothly. If not, grease the bushings and gears. Check for broken gears and replace if any.
		Defective motor.	Replace the fuser motor.
		Defective PWB.	Replace the engine PWB and check for correct operation (see page 1-5-31).
2550	**Conveying motor steady-state error** The rated speed signal detected the stability OFF continuously for 1 s after the conveying motor stabilizes.	Defective connector cable or poor contact in the connector.	Reinsert the connector. Also check for continuity within the connector cable. If none, replace the cable. Conveying motor and engine PWB (YC2)
		Defective drive transmission system.	Check if the rollers and gears rotate smoothly. If not, grease the bushings and gears. Check for broken gears and replace if any.
		Defective motor.	Replace the Conveying motor.
		Defective PWB.	Replace the engine PWB and check for correct operation (see page 1-5-31).
2560	**Conveying motor startup error** Conveying motor is not stabilized within 2 s since the motor is activated.	Defective connector cable or poor contact in the connector.	Reinsert the connector. Also check for continuity within the connector cable. If none, replace the cable. Conveying motor and engine PWB (YC2)
		Defective drive transmission system.	Check if the rollers and gears rotate smoothly. If not, grease the bushings and gears. Check for broken gears and replace if any.
		Defective motor.	Replace the conveying motor.
		Defective PWB.	Replace the engine PWB and check for correct operation (see page 1-5-31).

Code	Contents	Causes	Check procedures/ corrective measures
2600	**PF drive motor error** (paper feeder) When the PF drive motor is driven, error signal is detected continuously for 1 s.	Defective connector cable or poor contact in the connector.	Reinsert the connector. Also check for continuity within the connector cable. If none, replace the cable. PF drive motor and PF main PWB (YC2)
		Defective drive transmission system.	Check if the rollers and gears rotate smoothly. If not, grease the bushes and gears. Check for broken gears and replace if any.
		Defective motor.	Replace the PF drive motor.
		Defective PWB.	Replace the PF main PWB (Refer to the service manual for the paper feeder).
2700	**TC belt motor error** When the TC belt motor is driven, error signal is detected continuously for 1 s.	Defective connector cable or poor contact in the connector.	Reinsert the connector. Also check for continuity within the connector cable. If none, replace the cable. TC belt motor and TC PWB(YC2) TC PWB and TC connect PWB(YC1) TC connect PWB and engine PWB(YC5)
		Defective drive transmission system.	Check if the rollers and gears rotate smoothly. If not, grease the bushings and gears. Check for broken gears and replace if any.
		Defective motor.	Replace the TC belt motor.
		Defective PWB.	Replace the engine PWB or TC PWB or TC connect PWB check for correct operation (see page 1-5-31).
3100	**ISU home position error** ON/OFF of the HP sensor doesn't change after a prescribed pulse passes from power supply ON.	Defective connector cable or poor contact in the connector.	Reinsert the connector. Also check for continuity within the connector cable. If none, replace the cable. Home position sensor and engine PWB (YC13)
		Defective home position sensor.	Replace the home position sensor.
		Defective ISU motor.	Replace the ISU motor.
		Defective CCD PWB.	Replace the image scanner unit (see page 1-5-21).
		Defective engine PWB.	Replace the engine PWB and check for correct operation (see page 1-5-31).

Code	Contents	Causes	Check procedures/ corrective measures
3200	**Exposure lamp error** The input during the exposure lamp is turned on does not exceed the threshold for 5 seconds.	Defective connector cable or poor contact of the connector.	Reinsert the connector. Also check for continuity within the connector cable. If necessary, replace the cable. LED PWB and main PWB (YC112) CCD PWB and main PWB (YC113)
		Defective exposure lamp.	Replace the image scanner unit (see page 1-5-21).
		Defective CCD PWB.	
		Defective main PWB.	Replace the main PWB and check for correct operation (see page 1-5-30).
3500	**Communication error** A wrong read-back value.	Defective connector cable or poor contact in the connector.	Reinsert the connector. Also check for continuity within the connector cable. If none, replace the cable. CCD PWB and main PWB (YC113)
		Defective CCD PWB.	Replace the image scanner unit (see page 1-5-21).
		Defective main PWB.	Replace the main PWB and check for correct operation (see page 1-5-30).
3600	**Scanner sequence error**	Defective main PWB or engine PWB.	Replace the main PWB or the engine PWB and check for correct operation (see page 1-5-30 or 1-5-31).
4001	**Polygon motor (K) steady-state error** The rated speed signal detected the stability OFF continuously for 1 s after the polygon motor (K) stabilizes.	Defective connector cable or poor contact in the connector.	Reinsert the connector. Also check for continuity within the connector cable. If none, replace the cable. Laser scanner unit (K) and LSU connect PWB(YC5) LSU connect PWB and engine PWB (YC12)
		Defective motor.	Replace the Laser scanner unit (K).
		Defective PWB.	Replace the engine PWB or LSU connect PWB and check for correct operation (see page 1-5-31).
4002	**Polygon motor (C) steady-state error** The rated speed signal detected the stability OFF continuously for 1 s after the polygon motor (C) stabilizes.	Defective connector cable or poor contact in the connector.	Reinsert the connector. Also check for continuity within the connector cable. If none, replace the cable. Laser scanner unit (C) and LSU connect PWB(YC6) LSU connect PWB and engine PWB (YC12)
		Defective motor.	Replace the Laser scanner unit (C).
		Defective PWB.	Replace the engine PWB or LSU connect PWB and check for correct operation (see page 1-5-31).

Code	Contents	Causes	Check procedures/ corrective measures
4003	**Polygon motor (M) steady-state error** The rated speed signal detected the stability OFF continuously for 1 s after the polygon motor (M) stabilizes.	Defective connector cable or poor contact in the connector.	Reinsert the connector. Also check for continuity within the connector cable. If none, replace the cable. Laser scanner unit (M) and LSU connect PWB(YC7) LSU connect PWB and engine PWB (YC12)
		Defective motor.	Replace the Laser scanner unit (M).
		Defective PWB.	Replace the engine PWB or LSU connect PWB and check for correct operation (see page 1-5-31).
4004	**Polygon motor (Y) steady-state error** The rated speed signal detected the stability OFF continuously for 1 s after the polygon motor (Y) stabilizes.	Defective connector cable or poor contact in the connector.	Reinsert the connector. Also check for continuity within the connector cable. If none, replace the cable. Laser scanner unit (Y) and LSU connect PWB(YC8) LSU connect PWB and engine PWB (YC12)
		Defective motor.	Replace the Laser scanner unit (Y).
		Defective PWB.	Replace the engine PWB or LSU connect PWB and check for correct operation (see page 1-5-31).
4011	**Polygon motor (K) startup error** Polygon motor (K) is not stabilized within 10 s since the motor is activated.	Defective connector cable or poor contact in the connector.	Reinsert the connector. Also check for continuity within the connector cable. If none, replace the cable. Laser scanner unit (K) and LSU connect PWB(YC5) LSU connect PWB and engine PWB (YC12)
		Defective motor.	Replace the Laser scanner unit (K).
		Defective PWB.	Replace the engine PWB or LSU connect PWB and check for correct operation (see page 1-5-31).
4012	**Polygon motor (C) startup error** Polygon motor (C) is not stabilized within 10 s since the motor is activated.	Defective connector cable or poor contact in the connector.	Reinsert the connector. Also check for continuity within the connector cable. If none, replace the cable. Laser scanner unit (C) and LSU connect PWB(YC6) LSU connect PWB and engine PWB (YC12)
		Defective motor.	Replace the Laser scanner unit (C).
		Defective PWB.	Replace the engine PWB or LSU connect PWB and check for correct operation (see page 1-5-31).

Code	Contents	Causes	Check procedures/ corrective measures
4013	**Polygon motor (M) startup error** Polygon motor (M) is not stabilized within 10 s since the motor is activated.	Defective connector cable or poor contact in the connector.	Reinsert the connector. Also check for continuity within the connector cable. If none, replace the cable. Laser scanner unit (M) and LSU connect PWB(YC7) LSU connect PWB and engine PWB (YC12)
		Defective motor.	Replace the Laser scanner unit (M).
		Defective PWB.	Replace the engine PWB or LSU connect PWB and check for correct operation (see page 1-5-31).
4014	**Polygon motor (Y) startup error** Polygon motor (Y) is not stabilized within 10 s since the motor is activated.	Defective connector cable or poor contact in the connector.	Reinsert the connector. Also check for continuity within the connector cable. If none, replace the cable. Laser scanner unit (Y) and LSU connect PWB(YC8) LSU connect PWB and engine PWB (YC12)
		Defective motor.	Replace the Laser scanner unit (Y).
		Defective PWB.	Replace the engine PWB or LSU connect PWB and check for correct operation (see page 1-5-31).
4101	**BD initialization problem (K)** BD is not detected within one second after the polygon motor stabilizes.	Defective connector cable or poor contact in the connector.	Reinsert the connector. Also check for continuity within the connector cable. If none, replace the cable. BDPWB and APCPWB APCPWB and LSU connect PWB (YC1) LSU connect PWB and engine PWB (YC12)
		Defective APCPWB.	Replace the Laser scanner unit (K). (see page 1-5-20)
		Defective BDPWB.	
		Defective Main PWB.	Replace the main PWB and check for correct operation (see page 1-5-30).
4102	**BD initialization problem (C)** BD is not detected within one second after the polygon motor stabilizes.	Defective connector cable or poor contact in the connector.	Reinsert the connector. Also check for continuity within the connector cable. If none, replace the cable. BDPWB and APCPWB APCPWB and LSU connect PWB (YC2) LSU connect PWB and engine PWB (YC12)
		Defective APCPWB.	Replace the Laser scanner unit (C). (see page 1-5-20)
		Defective BDPWB.	
		Defective Main PWB.	Replace the main PWB and check for correct operation (see page 1-5-30).

Code	Contents	Causes	Check procedures/ corrective measures
4103	**BD initialization problem (M)** BD is not detected within one second after the polygon motor stabilizes.	Defective connector cable or poor contact in the connector.	Reinsert the connector. Also check for continuity within the connector cable. If none, replace the cable. BDPWB and APCPWB APCPWB and LSU connect PWB (YC3) LSU connect PWB and engine PWB (YC12)
		Defective APCPWB.	Replace the Laser scanner unit (M). (see page 1-5-20)
		Defective BDPWB.	
		Defective Main PWB.	Replace the main PWB and check for correct operation (see page 1-5-30).
4104	**BD initialization problem (Y)** BD is not detected within one second after the polygon motor stabilizes.	Defective connector cable or poor contact in the connector.	Reinsert the connector. Also check for continuity within the connector cable. If none, replace the cable. BDPWB and APCPWB APCPWB and LSU connect PWB (YC4) LSU connect PWB and engine PWB (YC12)
		Defective APCPWB.	Replace the Laser scanner unit (M). (see page 1-5-20)
		Defective BDPWB.	
		Defective Main PWB.	Replace the main PWB and check for correct operation (see page 1-5-30).
4600	**LSU cleaning motor error** When the LSU cleaning motor is driven, an error signal is detected continuously for 1 s.	Defective connector cable or poor contact in the connector.	Reinsert the connector. Also check for continuity of the connector cable. If none, replace the cable. LSU cleaning motor and LSU connect PWB(YC11) LSU connect PWB and engine PWB(YC12)
		Defective drive transmission system.	Check if the rollers and gears rotate smoothly. If not, grease the bushings and gears. Check for broken gears and replace if any.
		Defective motor.	Replace the LSU cleaning motor.
		Defective PWB.	Replace the engine PWB or LSU connect PWB check for correct operation (see page 1-5-31).

Code	Contents	Causes	Check procedures/ corrective measures
4700	**VIDEO ASIC device error** Mismatch of reading data from two locations occurs eight times successively. Mismatch between writing data and reading data occurs eight times successively.	Defective connector cable or poor contact in the connector.	Reinsert the connector. Also check for continuity within the connector cable. If none, replace the cable. Main PWB (YC105) and engine PWB (YC17)
		Defective main PWB or engine PWB.	Replace the main PWB or the engine PWB and check for correct operation (see page 1-5-30, 1-5-31).
4950	**LSU CPU communication error** A communication error is detected 10 times in succession.	Defective connector cable or poor contact in the connector.	Reinsert the connector. Also check for continuity within the connector cable. If none, replace the cable. Main PWB and engine PWB (YC26)
		Defective PWB.	Replace the main PWB or engine PWB and check for correct operation (see page 1-5-30, 1-5-31).
6000	**Broken fuser heater wire** Fuser thermistor 2 does not reach 100° C/212 °F even after20 s during warming up. The detected temperature of fuser thermistor2 does not reach the specified temperature (ready indication temperature) for 20 s in warming up after reached to 100° C/ 212 °F.	Defective connector cable or poor contact in the connector.	Reinsert the connector. Also check for continuity within the connector cable. If none, replace the cable. IH coil unit and IHPWB IHPWB and engine PWB (YC7)
		Deformed connector pin.	If the I/F connector pins of the fuser unit and the main unit are deformed owing to foreign matters, such as paper dusts, replace the connectors or the units including the connectors.
		Defective IH PWB.	Replace the IH PWB and check for correct operation (see page 1-5-35).
		Fuser thermostat triggered.	Reinsert the fuser unit (see page 1-5-18).
		Broken fuser heater wire.	
		Defective engine PWB.	Replace the engine PWB and check for correct operation (see page 1-5-31).
6020	**Abnormally high fuser thermistor 2 (center) temperature** The fuser thermistor 2 detects a temperature higher than 240°C/464°F continuously for 1 s.	Deformed connector pin.	If the I/F connector pins of the fuser unit and the main unit are deformed owing to foreign matters, such as paper dusts, replace the connectors or the units including the connectors.
		Shorted fuser thermistor.	Replace the fuser unit (see page 1-5-18).
		Defective engine PWB.	Replace the engine PWB and check for correct operation (see page 1-5-31).

Code	Contents	Causes	Check procedures/ corrective measures
6030	**Fuser thermistor 2 (center) break error** A/D value of the fuser thermistor 2 exceeds 984 bit continuously for 1 s during warming up.	Defective connector cable or poor contact in the connector.	Reinsert the connector. Also check for continuity within the connector cable. If none, replace the cable. Fuser thermister2 and fuser PWB (YC2) Fuser unit and engine PWB (YC22)
		Deformed connector pin.	If the I/F connector pins of the fuser unit and the main unit are deformed owing to foreign matters, such as paper dusts, replace the connectors or the units including the connectors.
		Defective fuser thermistor.	Replace the fuser unit (see page 1-5-18).
		Defective engine PWB.	Replace the engine PWB and check for correct operation (see page 1-5-31).
6040	**NC sensor error**	Deformed connector pin.	If the I/F connector pins of the fuser unit and the main unit are deformed owing to foreign matters, such as paper dusts, replace the connectors or the units including the connectors.
		Shorted fuser thermistor.	Replace the fuser unit (see page 1-5-18).
		Defective engine PWB.	Replace the engine PWB and check for correct operation (see page 1-5-31).
6050	**Abnormally low fuser thermistor 2 (center) temperature** The fuser temperature lower than 100 °C/212 °F is detected continuously for 1 s during printing. The fuser temperature lower than 70 °C/158 °F is detected continuously for 1 s during pre-heating.	Deformed connector pin.	If the I/F connector pins of the fuser unit and the main unit are deformed owing to foreign matters, such as paper dusts, replace the connectors or the units including the connectors.
		Defective fuser thermistor.	Replace the fuser unit (see page 1-5-18).
		Defective fuser heater.	
		Defective engine PWB.	Replace the engine PWB and check for correct operation (see page 1-5-31).

Code	Contents	Causes	Check procedures/ corrective measures
6120	**Abnormally high fuser thermistor 3 (press roller) temperature** The fuser temperature exceeds 200 °C/392 °F for 1 s.	Deformed connector pin.	If the I/F connector pins of the fuser unit and the main unit are deformed owing to foreign matters, such as paper dusts, replace the connectors or the units including the connectors.
		Defective IH PWB.	Replace the IH PWB and check for correct operation (see page 1-5-35).
		Defective fuser thermistor.	Replace the fuser unit (see page 1-5-18).
		Defective engine PWB.	Replace the engine PWB and check for correct operation (see page 1-5-31).
6130	**Fuser thermistor 3 (press roller) break error** Fuser thermistor 3 detects a temperature of -14 °C/6.8 °F . Fuser thermistor 3 does not reach 30° C/86 °F even after20 s during warming up.	Defective connector cable or poor contact in the connector.	Reinsert the connector. Also check for continuity within the connector cable. If none, replace the cable. Fuser thermistor 3 and fuser PWB (YC4) Fuser unit and engine PWB (YC22)
		Deformed connector pin.	If the I/F connector pins of the fuser unit and the main unit are deformed owing to foreign matters, such as paper dusts, replace the connectors or the units including the connectors.
		Defective IH PWB.	Replace the IH PWB and check for correct operation (see page 1-5-35).
		Defective fuser thermistor.	Replace the fuser unit (see page 1-5-18).
		Defective engine PWB.	Replace the engine PWB and check for correct operation (see page 1-5-31).
6150	**Abnormally low fuser thermistor 3 (press roller) temperature** The fuser temperature lower than 30 °C/86 °F is detected continuously for 1 s.	Deformed connector pin.	If the I/F connector pins of the fuser unit and the main unit are deformed owing to foreign matters, such as paper dusts, replace the connectors or the units including the connectors.
		Defective fuser thermistor.	Replace the fuser unit (see page 1-5-18).
		Defective fuser heater.	
		Defective engine PWB.	Replace the engine PWB and check for correct operation (see page 1-5-31).

Code	Contents	Causes	Check procedures/ corrective measures
6200	**Broken fuser edge heater wire** Fuser thermistor 1 does not reach 50° C/122 °F even after20 s during warming up. The detected temperature of fuser thermistor1 does not reach the specified temperature (ready indication temperature) for 20 s in warming up after reaching 50° C/122 °F.	Defective connector cable or poor contact in the connector.	Reinsert the connector. Also check for continuity within the connector cable. If none, replace the cable. IH coil unit and IHPWB IHPWB and engine PWB (YC7)
		Deformed connector pin.	If the I/F connector pins of the fuser unit and the main unit are deformed owing to foreign matters, such as paper dusts, replace the connectors or the units including the connectors.
		Fuser thermostat triggered.	Reinsert the fuser unit (see page 1-5-18).
		Broken fuser heater wire.	
		Defective engine PWB.	Replace the engine PWB and check for correct operation (see page 1-5-31).
6220	**Abnormally high fuser thermistor 1 (edge) temperature** The fuser temperature exceeds 240 °C/464 °F for 1 s.	Deformed connector pin.	If the I/F connector pins of the fuser unit and the main unit are deformed owing to foreign matters, such as paper dusts, replace the connectors or the units including the connectors.
		Defective cooling fan motor.	Replace the fuser fan motor.
		Defective fuser thermistor.	Replace the fuser unit (see page 1-5-18).
		Defective engine PWB.	Replace the engine PWB and check for correct operation (see page 1-5-31).
6230	**Fuser thermistor 1 (edge) break error** During warming up a hearter, fuser thermistor 2 detects a temperature of 100 °C/212 °F or higher and, fuser thermistor 1 detects a temperature of 37 °C/99 °F or lower.	Defective connector cable or poor contact in the connector.	Reinsert the connector. Also check for continuity within the connector cable. If none, replace the cable. Fuser thermistor 1 and fuser PWB (YC3) Fuser unit and engine PWB (YC22)
		Deformed connector pin.	If the I/F connector pins of the fuser unit and the main unit are deformed owing to foreign matters, such as paper dusts, replace the connectors or the units including the connectors.
		Defective fuser thermistor.	Replace the fuser unit (see page 1-5-18).
		Defective engine PWB.	Replace the engine PWB and check for correct operation (see page 1-5-31).

Code	Contents	Causes	Check procedures/ corrective measures
6250	**Abnormally low fuser thermistor 1 (edge) temperature** The fuser temperature lower than 100 °C/212 °F is detected continuously for 1 s during printing. The fuser temperature lower than 50 °C/122 °F is detected continuously for 1 s during pre-heating.	Deformed connector pin.	If the I/F connector pins of the fuser unit and the main unit are deformed owing to foreign matters, such as paper dusts, replace the connectors or the units including the connectors.
		Defective IH PWB.	Replace the IH PWB and check for correct operation (see page 1-5-35).
		Defective fuser thermistor.	Replace the fuser unit (see page 1-5-18).
		Defective fuser heater.	
		Defective engine PWB.	Replace the engine PWB and check for correct operation (see page 1-5-31).
6410	**Fuser unit type mismatch problem** Absence of the fuser unit is detected.	Fuser unit connector inserted incorrectly.	Reinsert the fuser unit connector if necessary.
		Different type of the fuser unit is installed.	Install the correct fuser unit.
6600	**Belt rotation error** The belt was detected to stop for 1 s continuously during motor remote is on.	Defective fuser motor.	Replace the fuser motor.
		Defective IH belt.	Replace the fuser unit (see page 1-5-18).
		Defective IH PWB.	Replace the IH PWB and check for correct operation (see page 1-5-35).
		Defective engine PWB.	Replace the engine PWB and check for correct operation (see page 1-5-31).
6710	**CPU thermal runaway (IHPWB)**	Defective IH PWB.	Replace the IH PWB and check for correct operation (see page 1-5-35).
6720	**Belt rotation error (IHPWB)**	Defective IH PWB.	Replace the IH PWB and check for correct operation (see page 1-5-35).
		Defective fuser motor.	Replace the fuser motor.
		Defective fuser unit.	Replace the fuser unit.
6730	**Abnormally high IGBT1 temperature (IHPWB)**	Defective IH PWB.	Replace the IH PWB and check for correct operation (see page 1-5-35).
		Defective cooling fan motor.	Replace the IH fan motor.

Code	Contents	Causes	Check procedures/ corrective measures
6740	**Abnormally high IGBT2 temperature (IHPWB)**	Defective IH PWB.	Replace the IH PWB and check for correct operation (see page 1-5-35).
		Defective cooling fan motor.	Replace the IH fan motor.
6750	**Abnormally output overcurrent (IHPWB)**	Defective IH PWB.	Replace the IH PWB and check for correct operation (see page 1-5-35).
		Defective fuser unit.	Replace the fuser unit.
6760	**Abnormally AC input overcurrent (IHPWB)**	Defective IH PWB.	Replace the IH PWB and check for correct operation (see page 1-5-35).
6770	**Abnormally low electric power (IHPWB)**	Defective connector cable or poor contact in the connector.	Reinsert the connector. Also check for continuity within the connector cable. If none, replace the cable.
		Defective IH PWB.	Replace the IH PWB and check for correct operation (see page 1-5-35).
6930	**IH coil fan motor error** The alarm signal was detected for 5 seconds continuously during operation.	Defective connector cable or poor contact in the connector.	Reinsert the connector. Also check for continuity within the connector cable. If none, replace the cable. IH coil fan motor and engine PWB(YC21)
		Defective cooling fan motor.	Replace the IH coil fan motor.
		Defective IH PWB.	Replace the IH PWB and check for correct operation (see page 1-5-35).
6950	**IH CPU communication error** **A communication error is detected 3 times in succession.**	Defective connector cable or poor contact in the connector.	Reinsert the connector. Also check for continuity within the connector cable. If none, replace the cable.
		Defective IH PWB.	Replace the IH PWB and check for correct operation (see page 1-5-35).
		Defective engine PWB.	Replace the engine PWB and check for correct operation (see page 1-5-31).
6990	**Fuser unit type mismatch problem** Absence of the fuser unit is detected.	Defective IH PWB.	Replace the IH PWB and check for correct operation (see page 1-5-35).

Code	Contents	Causes	Check procedures/ corrective measures
7001	**Toner motor K error** When the toner motor K is driven, error signal is detected continuously for 1 s.	Defective connector cable or poor contact in the connector.	Reinsert the connector. Also check for continuity within the connector cable. If none, replace the cable. Toner motor K and engine PWB(YC8)
		Defective drive transmission system.	Check if the rollers and gears rotate smoothly. If not, grease the bushings and gears. Check for broken gears and replace if any.
		Defective motor.	Replace the toner motor K.
		Defective PWB.	Replace the engine PWB check for correct operation (see page 1-5-31).
7002	**Toner motor C error** When the toner motor C is driven, error signal is detected continuously for 1 s.	Defective connector cable or poor contact in the connector.	Reinsert the connector. Also check for continuity within the connector cable. If none, replace the cable. Toner motor C and engine PWB(YC8)
		Defective drive transmission system.	Check if the rollers and gears rotate smoothly. If not, grease the bushings and gears. Check for broken gears and replace if any.
		Defective motor.	Replace the toner motor C.
		Defective PWB.	Replace the engine PWB check for correct operation (see page 1-5-31).
7003	**Toner motor M error** When the toner motor M is driven, error signal is detected continuously for 1 s.	Defective connector cable or poor contact in the connector.	Reinsert the connector. Also check for continuity within the connector cable. If none, replace the cable. Toner motor M and engine PWB(YC8)
		Defective drive transmission system.	Check if the rollers and gears rotate smoothly. If not, grease the bushings and gears. Check for broken gears and replace if any.
		Defective motor.	Replace the toner motor M.
		Defective PWB.	Replace the engine PWB check for correct operation (see page 1-5-31).

Code	Contents	Causes	Check procedures/ corrective measures
7004	**Toner motor Y error** When the toner motor Y is driven, error signal is detected continuously for 1 s.	Defective connector cable or poor contact in the connector.	Reinsert the connector. Also check for continuity within the connector cable. If none, replace the cable. Toner motor Y and engine PWB(YC8)
		Defective drive transmission system.	Check if the rollers and gears rotate smoothly. If not, grease the bushings and gears. Check for broken gears and replace if any.
		Defective motor.	Replace the toner motor Y.
		Defective PWB.	Replace the engine PWB check for correct operation (see page 1-5-31).
7101	**Toner sensor K error**	Defective Developer unit.	Replace the developer unit K (see page 1-5-14).
		Defective PWB.	Replace the engine PWB check for correct operation (see page 1-5-31).
7102	**Toner sensor C error**	Defective Developer unit.	Replace the developer unit C (see page 1-5-14).
		Defective PWB.	Replace the engine PWB check for correct operation (see page 1-5-31).
7103	**Toner sensor M error**	Defective Developer unit.	Replace the developer unit M (see page 1-5-14).
		Defective PWB.	Replace the engine PWB check for correct operation (see page 1-5-31).
7104	**Toner sensor Y error**	Defective Developer unit.	Replace the developer unit Y (see page 1-5-14).
		Defective PWB.	Replace the engine PWB check for correct operation (see page 1-5-31).
7401	**Developing unit K type mismatch problem** Absence of the developing unit K is detected.	Developing unit connector inserted incorrectly.	Reinsert the developing unit connector if necessary.
		Different type of the developing unit is installed.	Install the correct developing unit.
		Defective PWB.	Replace the engine PWB check for correct operation (see page 1-5-31).

Code	Contents	Causes	Check procedures/ corrective measures
7402	**Developing unit C type mismatch problem** Absence of the developing unit C is detected.	Developing unit connector inserted incorrectly.	Reinsert the developing unit connector if necessary.
		Different type of the developing unit is installed.	Install the correct developing unit.
		Defective PWB.	Replace the engine PWB check for correct operation (see page 1-5-31).
7403	**Developing unit M type mismatch problem** Absence of the developing unit M is detected.	Developing unit connector inserted incorrectly.	Reinsert the developing unit connector if necessary.
		Different type of the developing unit is installed.	Install the correct developing unit.
		Defective PWB.	Replace the engine PWB check for correct operation (see page 1-5-31).
7404	**Developing unit Y type mismatch problem** Absence of the developing unit Y is detected.	Developing unit connector inserted incorrectly.	Reinsert the developing unit connector if necessary.
		Different type of the developing unit is installed.	Install the correct developing unit.
		Defective PWB.	Replace the engine PWB check for correct operation (see page 1-5-31).
7411	**Drum unit K type mismatch problem** Absence of the drum unit K is detected.	Drum unit connector inserted incorrectly.	Reinsert the drum unit connector if necessary.
		Different type of the drum unit is installed.	Install the correct drum unit.
		Defective PWB.	Replace the engine PWB check for correct operation (see page 1-5-31).
7412	**Drum unit C type mismatch problem** Absence of the drum unit C is detected.	Drum unit connector inserted incorrectly.	Reinsert the drum unit connector if necessary.
		Different type of the drum unit is installed.	Install the correct drum unit.
		Defective PWB.	Replace the engine PWB check for correct operation (see page 1-5-31).

Code	Contents	Causes	Check procedures/ corrective measures
7413	**Drum unit M type mismatch problem** Absence of the drum unit M is detected.	Drum unit connector inserted incorrectly.	Reinsert the drum unit connector if necessary.
		Different type of the drum unit is installed.	Install the correct drum unit.
		Defective PWB.	Replace the engine PWB check for correct operation (see page 1-5-31).
7414	**Drum unit Y type mismatch problem** Absence of the drum unit Y is detected.	Drum unit connector inserted incorrectly.	Reinsert the drum unit connector if necessary.
		Different type of the drum unit is installed.	Install the correct drum unit.
		Defective PWB.	Replace the engine PWB check for correct operation (see page 1-5-31).
7420	**Transfer belt unit type mismatch problem** Absence of the transfer belt unit is detected.	Transfer belt unit connector inserted incorrectly.	Reinsert the transfer belt unit connector if necessary.
		Different type of the transfer belt unit is installed.	Install the correct transfer belt unit.
		Defective PWB.	Replace the engine PWB check for correct operation (see page 1-5-31).
7601	**ID sensor 1 (front) error**	Defective ID sensor.	Replace the ID sensor 1.
		Defective PWB.	Replace the engine PWB check for correct operation (see page 1-5-31).
7602	**ID sensor 2 (rear) error**	Defective ID sensor.	Replace the ID sensor 2.
		Defective PWB.	Replace the engine PWB check for correct operation (see page 1-5-31).
7611	**ID sensor (K) density error** When ID sensor 2 detected CTD is 500 or less.	Defective ID sensor.	Replace the ID sensor.
		Defective PWB.	Replace the engine PWB check for correct operation (see page 1-5-31).
7612	**ID sensor (C) density error** When ID sensor 2 detected CTD is 500 or less.	Defective ID sensor.	Replace the ID sensor.
		Defective PWB.	Replace the engine PWB check for correct operation (see page 1-5-31).
7613	**ID sensor (M) density error** When ID sensor 2 detected CTD is 500 or less.	Defective ID sensor.	Replace the ID sensor.
		Defective PWB.	Replace the engine PWB check for correct operation (see page 1-5-31).

Code	Contents	Causes	Check procedures/ corrective measures
7614	**ID sensor (Y) density error** When ID sensor 2 detected CTD is 500 or less.	Defective ID sensor.	Replace the ID sensor.
		Defective PWB.	Replace the engine PWB check for correct operation (see page 1-5-31).
7620	**ID sensor timing error** Color registration correction was failed.	Defective ID sensor.	Replace the ID sensor.
		Defective PWB.	Replace the engine PWB check for correct operation (see page 1-5-31).
7800	**Broken external thermistor wire** The external thermistor delivers 0.3V or more.	Defective connector cable or poor contact in the connector.	Reinsert the connector. Also check for continuity within the connector cable. If none, replace the cable. Temperature sensor and engine PWB (YC21)
		Defective temperature sensor.	Replace the temperature sensor.
7810	**Short-circuited external thermistor wire** external thermistor delivers 3V or more.	Defective connector cable or poor contact in the connector.	Reinsert the connector. Also check for continuity within the connector cable. If none, replace the cable. Temperature sensor and engine PWB (YC21)
		Defective temperature sensor.	Replace the temperature sensor.
7901	**Drum K EEPROM error** No response is issued from the device in reading/writing for 5 ms or more and this problem is repeated five times successively. Mismatch of reading data from two locations occurs eight times successively. Mismatch between writing data and reading data occurs eight times successively.	Poor contact in the connector terminals.	Reinsert the connector. Also check for continuity within the connector cable. If none, replace the cable. Drum unit (K) and drum connect PWB(YC5) drum connect PWB and engine connect PWB (YC4) Engine connect PWB and engine PWB (YC9)
		Defective drum PWB.	Replace the drum unit K (see 1-5-16).

Code	Contents	Causes	Check procedures/ corrective measures
7902	**Drum C EEPROM error** No response is issued from the device in reading/writing for 5 ms or more and this problem is repeated five times successively. Mismatch of reading data from two locations occurs eight times successively. Mismatch between writing data and reading data occurs eight times successively.	Poor contact in the connector terminals.	Reinsert the connector. Also check for continuity within the connector cable. If none, replace the cable. Drum unit (C) and drum connect PWB(YC3) drum connect PWB and engine connect PWB (YC4) Engine connect PWB and engine PWB (YC9)
		Defective drum PWB.	Replace the drum unit C (see 1-5-16).
7903	**Drum M EEPROM error** No response is issued from the device in reading/writing for 5 ms or more and this problem is repeated five times successively. Mismatch of reading data from two locations occurs eight times successively. Mismatch between writing data and reading data occurs eight times successively.	Poor contact in the connector terminals.	Reinsert the connector. Also check for continuity within the connector cable. If none, replace the cable. Drum unit (M) and drum connect PWB(YC4) drum connect PWB and engine connect PWB (YC4) Engine connect PWB and engine PWB (YC9)
		Defective drum PWB.	Replace the drum unit M (see 1-5-16).
7904	**Drum Y EEPROM error** No response is issued from the device in reading/writing for 5 ms or more and this problem is repeated five times successively. Mismatch of reading data from two locations occurs eight times successively. Mismatch between writing data and reading data occurs eight times successively.	Poor contact in the connector terminals.	Reinsert the connector. Also check for continuity within the connector cable. If none, replace the cable. Drum unit (Y) and drum connect PWB(YC2) drum connect PWB and engine connect PWB (YC4) Engine connect PWB and engine PWB (YC9)
		Defective drum PWB.	Replace the drum unit Y (see 1-5-16).
7911	**Developing unit K EEPROM error** No response is issued from the device in reading/writing for 5 ms or more and this problem is repeated five times successively. Mismatch of reading data from two locations occurs eight times successively. Mismatch between writing data and reading data occurs eight times successively.	Poor contact in the connector terminals.	Reinsert the connector. Also check for continuity within the connector cable. If none, replace the cable. Developer unit (K) and drum connect PWB(YC9) drum connect PWB and engine connect PWB (YC4) Engine connect PWB and engine PWB (YC12)
		Defective developing PWB.	Replace the developer unit K (see 1-5-14).

Code	Contents	Causes	Check procedures/ corrective measures
7912	**Developing unit C EEPROM error** No response is issued from the device in reading/writing for 5 ms or more and this problem is repeated five times successively. Mismatch of reading data from two locations occurs eight times successively. Mismatch between writing data and reading data occurs eight times successively.	Poor contact in the connector terminals.	Reinsert the connector. Also check for continuity within the connector cable. If none, replace the cable. Developer unit (C) and drum connect PWB(YC7) drum connect PWB and engine connect PWB (YC4) Engine connect PWB and engine PWB (YC12)
		Defective developing PWB.	Replace the developer unit C (see 1-5-14).
7913	**Developing unit M EEPROM error** No response is issued from the device in reading/writing for 5 ms or more and this problem is repeated five times successively. Mismatch of reading data from two locations occurs eight times successively. Mismatch between writing data and reading data occurs eight times successively.	Poor contact in the connector terminals.	Reinsert the connector. Also check for continuity within the connector cable. If none, replace the cable. Developer unit (M) and drum connect PWB(YC8) drum connect PWB and engine connect PWB (YC4) Engine connect PWB and engine PWB (YC12)
		Defective developing PWB.	Replace the developer unit M (see 1-5-14).
7914	**Developing unit Y EEPROM error** No response is issued from the device in reading/writing for 5 ms or more and this problem is repeated five times successively. Mismatch of reading data from two locations occurs eight times successively. Mismatch between writing data and reading data occurs eight times successively.	Poor contact in the connector terminals.	Reinsert the connector. Also check for continuity within the connector cable. If none, replace the cable. Developer unit (Y) and drum connect PWB(YC6) drum connect PWB and engine connect PWB (YC4) Engine connect PWB and engine PWB (YC12)
		Defective developing PWB.	Replace the developer unit Y (see 1-5-14).

Code	Contents	Causes	Check procedures/ corrective measures
8030	**Tray upper limit detection problem (document finisher)** When the tray elevation motor raises a tray, the ON status of the tray upper limit sensor is detected.	Defective connector cable or poor contact in the connector.	Reinsert the connector. Also check for continuity within the connector cable. If none, replace the cable. Tray upper limit sensor and DF main PWB (CN5) Paper surface sensor 1/2 and DF main PWB (CN6)
		Defective tray upper limit sensor, paper surface sensor 1/2.	Replace the sensor.
		Defective DF main PWB.	Replace the DF main PWB and check for correct operation.
8040	**Belt problem (document finisher)** The belt sensor does not turn on/off within specified time of the belt solenoid turning on.	Defective connector cable or poor contact in the connector.	Reinsert the connector. Also check for continuity within the connector cable. If none, replace the cable. Belt sensor and DF main PWB (CN10) Belt solenoid and DF main PWB (CN21)
		Defective belt sensor.	Replace the belt sensor.
		Defective belt solenoid.	Replace the belt solenoid.
		Defective DF main PWB.	Replace the DF main PWB and check for correct operation.
8140	**Tray elevation motor problem (document finisher)** The tray low limit sensor or paper surface sensor 1/2 cannot be detected to be on within 10 s since the tray elevation motor is activated.	Defective connector cable or poor contact in the connector.	Reinsert the connector. Also check for continuity within the connector cable. If none, replace the cable. Tray elevation motor and DF main PWB (CN12)
		Defective connector cable or poor contact in the connector.	Reinsert the connector. Also check for continuity within the connector cable. If none, replace the cable. Tray lower limit sensor, and DF main PWB (CN5) Paper surface sensor 1/2 and DF main PWB (CN6)
		The tray elevation motor malfunctions.	Replace the tray elevation motor.
		Defective tray lower limit sensor, paper surface sensor 1/2.	Replace the sensor.
		Defective DF main PWB.	Replace the DF main PWB and check for correct operation.

Code	Contents	Causes	Check procedures/ corrective measures
8210	**Stapler problem (document finisher)** Jam 7012 or 7023 is indicated.	Defective connector cable of staple or poor contact in the connector.	Reinsert the connector. Also check for continuity within the connector cable. If none, replace the cable.
		The stapler is blocked with a staple.	Remove the stapler cartridge, and check the cartridge and the stapling section of the stapler.
		The stapler is broken.	Replace the stapler and check for correct operation.
		Defective DF main PWB.	Replace the DF main PWB and check for correct operation.
8320	**Adjustment motor 2 problem (document finisher)** The adjustment sensor 2 does not turn on/off within specified time of the adjustment motor 2 turning on.	Defective connector cable or poor contact in the connector.	Reinsert the connector. Also check for continuity within the connector cable. If none, replace the cable. Adjustment motor 2 and DF main PWB (CN18) Adjustment sensor 2 and DF main PWB (CN7)
		Defective adjustment sensor 2.	Replace the adjustment sensor 2.
		Defective adjustment motor 2.	Replace the adjustment motor 2.
		Defective DF main PWB.	Replace the DF main PWB and check for correct operation.
8330	**Adjustment motor 1 problem (document finisher)** The adjustment sensor 1 does not turn on/off within specified time of the adjustment motor 1 turning on.	Defective connector cable or poor contact in the connector.	Reinsert the connector. Also check for continuity within the connector cable. If none, replace the cable. Adjustment motor 1 and DF main PWB (CN18) Adjustment sensor 1 and DF main PWB (CN7)
		Defective adjustment sensor 1.	Replace the adjustment sensor 1.
		Defective adjustment motor 1.	Replace the adjustment motor 1.
		Defective DF main PWB.	Replace the DF main PWB and check for correct operation.

Code	Contents	Causes	Check procedures/ corrective measures
8350	**Roller motor problem (document finisher)** The roller sensor does not turn on/off within specified time of the roller motor turning on.	Defective connector cable or poor contact in the connector.	Reinsert the connector. Also check for continuity within the connector cable. If none, replace the cable. Roller motor and DF main PWB (CN20) Roller sensor and DF main PWB (CN11)
		Defective roller sensor.	Replace the roller sensor.
		Defective roller motor.	Replace the roller motor.
		Defective DF main PWB.	Replace the DF main PWB and check for correct operation.
8360	**Slide motor problem (document finisher)** The slide sensor does not turn on/off within specified time of the slide motor turning on.	Defective connector cable or poor contact in the connector.	Reinsert the connector. Also check for continuity within the connector cable. If none, replace the cable. Slide motor and DF main PWB (CN14) Slide sensor and DF main PWB (CN22)
		Defective slide sensor.	Replace the slide sensor.
		Defective slide motor.	Replace the slide motor.
		Defective DF main PWB.	Replace the DF main PWB and check for correct operation.
8460	**EEPROM problem (document finisher)** Reading from or writing to EEPROM cannot be performed.	Defective EEPROM or DF main PWB.	Replace the DF main PWB and check for correct operation.
8800	**Document finisher communication error** A communication error is detected 10 times in succession.	Defective connector cable or poor contact in the connector.	Reinsert the connector. Also check for continuity within the connector cable. If none, replace the cable. Engine PWB (YC19) and DF relay PWB (YC2) DF relay PWB (YC3) and DF main PWB (CN1)
		Defective DF main PWB.	Replace the DF main PWB and check for correct operation.
		Defective engine PWB.	Replace the engine PWB and check for correct operation (see page 1-5-31).

Code	Contents	Causes	Check procedures/ corrective measures
8830	**Bridge communication error (document finisher)** A communication error is detected 10 times in succession.	Defective connector cable or poor contact in the connector.	Reinsert the connector. Also check for continuity within the connector cable. If none, replace the cable. Engine PWB (YC19) and DF relay PWB (YC2) DF relay PWB (YC4) and bridge PWB (YC5)
		Defective bridge PWB.	Replace the bridge PWB and check for correct operation.
		Defective engine PWB.	Replace the engine PWB and check for correct operation (see page 1-5-31).
8900	**Backup memory data problem (document finisher)** Read and write data does not match 3 times in succession.	Defective connector cable or poor contact in the connector.	Check the connection of connector on the finisher main PWB and the connector of the machine, and the continuity across the connector terminals. Repair or replace if necessary.
		EEPROM installed incorrectly.	Install EEPROM correctly.
		Defective finisher main PWB.	Replace the finisher main PWB and check for correct operation.
9000	**Document processor communication error** A communication error is detected 10 times in succession.	Defective connector cable or poor contact in the connector.	Reinsert the connector. Also check for continuity within the connector cable. If none, replace the cable. DP main PWB and engine PWB (YC18)
		Defective DP main PWB.	Replace the DP main PWB and check for correct operation (see page 1-5-28).
9060	**DP EEPROM error** Mismatch between writing data and reading data occurs three times successively. Mismatch of reading data from two locations occurs three times successively.	Defective DP main PWB.	Replace the DP main PWB and check for correct operation (see page 1-5-28).
		Device damage of EEPROM.	Contact the Service Administrative Division.
9500	**BRU communication error**	IPU PWB error	Contact the Service Administrative Division.
9510	**BRU PWB error**		
9520	**BRU PWB data error**		

Code	Contents	Causes	Check procedures/ corrective measures
F000	**Main PWB - operation panel PWB communication error**	Defective main PWB.	Turn the main power switch off/on to restart the machine. If the error is not resolved, replace main PWB (see page 1-5-30).
		Defective operation panel PWB.	Replace the operation panel PWB and check for correct operation.
F010	**Main PWB checksum error**	Defective main PWB.	Turn the main power switch off/on to restart the machine. If the error is not resolved, replace main PWB (see page 1-5-30).
F011			
F012			
F013			
F040	**Main PWB - print engine communication error**	Defective main PWB.	Turn the main power switch off/on to restart the machine. If the error is not resolved, replace main PWB (see page 1-5-30).
		Defective engine PWB.	Replace the engine PWB and check for correct operation (see page 1-5-31).
F050	**Print engine ROM checksum error**	Defective engine PWB.	Turn the main power switch off/on to restart the machine. If the error is not resolved, replace engine PWB (see page 1-5-31).

1-4-3 Image quality problems

If the part causing the problem is not designated as a service part, replace with the assembly comprising the part.

(1) No image appears (entirely white).

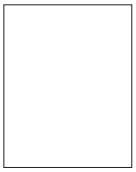

See page 1-4-41

(2) No image appears (entirely black).

See page 1-4-41

(3) Image is too light.

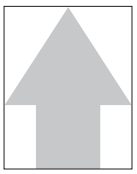

See page 1-4-42

(4) The background is colored.

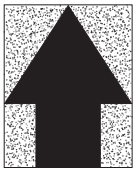

See page 1-4-42

(5) White streaks are printed vertically.

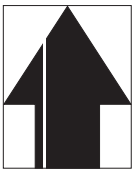

See page 1-4-42

(6) Black streaks are printed vertically.

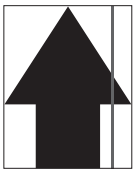

See page 1-4-43

(7) Streaks are printed horizontally.

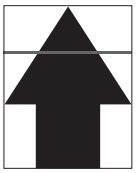

See page 1-4-43

(8) One side of the print image is darker than the other.

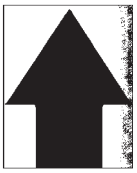

See page 1-4-43

(9) Spots are printed.

See page 1-4-44

(10) Image is blurred.

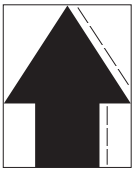

See page 1-4-44

(11) The leading edge of the image is consistently misaligned with the original.

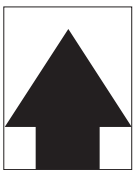

See page 1-4-44

(12) The leading edge of the image is sporadically misaligned with the original.

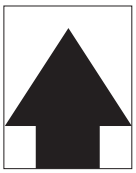

See page 1-4-44

(13) Paper is wrinkled.

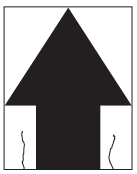

See page 1-4-45

(14) Offset occurs.

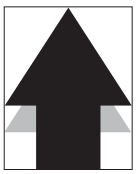

See page 1-4-45

(15) Part of image is missing.

See page 1-4-45

(16) Fusing is loose.

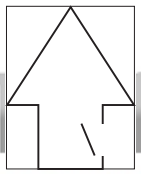

See page 1-4-45

(17) Image is out of focus.

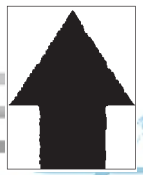

See page 1-4-46

(18) Image center does not align with the original center.

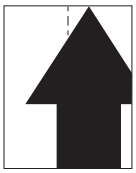

See page 1-4-46

(1) No image appears (entirely white).

Print example	Causes		Check procedures/corrective measures
	Defective transfer bias output.	Defective connector cable or poor contact in the connector.	Reinsert the connector. Also check for continuity of the connector cable. If necessary, replace the cable. High voltage PWB and engine PWB (YC15) High voltage PWB sub and engine PWB (YC13)
		Defective high voltage PWB.	Replace the high voltage PWB.
		Defective high voltage PWB sub.	Replace the high voltage PWB sub.
		Defective engine PWB.	Replace the engine PWB (see page 1-5-31).
	Defective developer bias output.	Defective connector cable or poor contact in the connector.	Reinsert the connector. Also check for continuity of the connector cable. If necessary, replace the cable. High voltage PWB and engine PWB (YC15)
		Defective high voltage PWB.	Replace the high voltage PWB.
		Defective engine PWB.	Replace the engine PWB (see page 1-5-31).
	No LSU laser is output.	Defective laser scanner unit.	Replace the laser scanner unit (see page 1-5-20).
		Defective main PWB.	Replace the main PWB (see page 1-5-30).

(2) No image appears (entirely black).

Print example	Causes		Check procedures/corrective measures
	No main charging.	Defective connector cable or poor contact in the connector.	Reinsert the connector. Also check for continuity within the connector cable. If none, replace the cable. High voltage PWB and engine PWB (YC15)
		Defective charger roller unit.	Replace the charger roller unit (see page 1-5-16).
		Defective high voltage PWB.	Replace the high voltage PWB.
		Defective engine PWB.	Replace the engine PWB (see page 1-5-31).
	Exposure lamp fails to light.	Defective connector cable or poor contact in the connector.	Reinsert the connector. Also check for continuity within the connector cable. If none, replace the cable. LED PWB and main PWB (YC112) CCD PWB and main PWB (YC113)
		Defective CCD PWB.	Replace the image scanner unit (see page 1-5-21).
		Defective main PWB.	Replace the main PWB (see page 1-5-30).

(3) Image is too light.

Print example	Causes		Check procedures/corrective measures
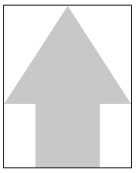	Defective transfer charger output.	Defective connector cable or poor contact in the connector.	Reinsert the connector. Also check for continuity within the connector cable. If none, replace the cable. High voltage PWB and engine PWB (YC15) High voltage PWB sub and engine PWB (YC13)
		Defective high voltage PWB.	Replace the high voltage PWB (see page 1-5-35).
		Defective high voltage PWB sub.	Replace the high voltage PWB sub (see page 1-5-35).
		Defective engine PWB.	Replace the engine PWB (see page 1-5-31).
	Insufficient toner.		If the display shows the message requesting toner replenishment, replace the container.
	Deteriorated toner.		Perform the drum refresh operation.

(4) The background is colored.

Print example	Causes		Check procedures/corrective measures
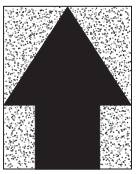	Defective main charger output.	Defective connector cable or poor contact in the connector.	Reinsert the connector. Also check for continuity within the connector cable. If none, replace the cable. High voltage PWB and engine PWB (YC15)
		Defective high voltage PWB.	Replace the high voltage PWB.
		Defective engine PWB.	Replace the engine PWB (see page 1-5-31).
	Deteriorated toner.		Perform the drum refresh operation.

(5) White streaks are printed vertically.

Print example	Causes	Check procedures/corrective measures
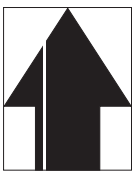	Foreign matter in the developer unit.	Check if the magnetic brush is formed uniformly. Replace the developer unit if any foreign matter (see page 1-5-14).
	Dirty shading plate.	Clean the shading plate.
	Adhesion of soiling to transfer belt.	Clean the transfer belt. Replace the intermadiate transfer unit if it is extremely dirty (see page 1-5-17).
	Adhesion of soiling to transfer roller.	Clean the transfer roller. Replace the transfer roller unit if it is extremely dirty (see page 1-5-17).
	Dirty LSU dust shield glass.	Perform the LSU dust shield glass cleaning.

(6) Black streaks are printed vertically.

Print example	Causes	Check procedures/corrective measures
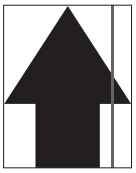	Dirty contact glass.	Clean the contact glass.
	Dirty slit glass.	Clean the slit glass.
	Dirty or flawed drum.	Perform the drum refresh operation. Flawed drum. Replace the drum unit (see page 1-5-16).
	Deformed or worn cleaning blade in the drum unit.	Replace the drum unit (see page 1-5-16).
	Defective transfer belt.	Replace the intermidiate transfer unit (see page 1-5-17).
	Defective transfer roller.	Replace the transfer roller unit(see page 1-5-17).
	Dirty scanner mirror.	Clean the scanner mirror.

(7) Streaks are printed horizontally.

Print example	Causes	Check procedures/corrective measures
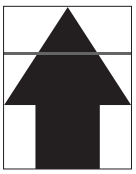	Dirty or flawed drum.	Perform the drum refresh operation. Flawed drum. Replace the drum unit (see page 1-5-16).
	Dirty developer section.	Clean any part contaminated with toner in the developer section.
	Poor contact of grounding terminal of drum unit.	Check the installation of the drum unit. If it operates incorrectly, replace it (see page 1-5-16).

(8) One side of the print image is darker than the other.

Print example	Causes	Check procedures/corrective measures
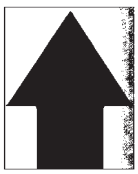	Defective exposure lamp.	Replace the LED PWB (see page 1-5-23).

(9) Spots are printed.

Print example	Causes	Check procedures/corrective measures
	Dirty contact glass.	Clean the contact glass.
	Dirty or flawed drum.	Perform the drum refresh operation. Flawed drum. Replace the drum unit (see page 1-5-16).
	Deformed or worn cleaning blade in the drum unit.	Replace the drum unit (see page 1-5-16).
	Flawed developer roller.	Replace the developer unit (see page 1-5-14).
	Dirty heat roller and press roller.	Clean the heat roller and press roller.

(10) Image is blurred.

Print example	Causes	Check procedures/corrective measures
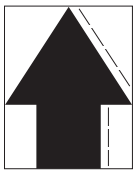	Scanner moves erratically.	Check if there is any foreign matter on the front and rear scanner rails. If any, remove it.
	Deformed press roller.	Replace the fuser unit (see page 1-5-18).
	Paper conveying section drive problem.	Check the gears and belts and, if necessary, grease them.

(11) The leading edge of the image is consistently misaligned with the original.

Print example	Causes	Check procedures/corrective measures
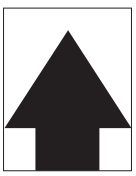	Misadjusted leading edge registration.	Run maintenance mode U034 to readjust the leading edge registration (see page 1-3-21).
	Misadjusted scanner leading edge registration.	Run maintenance mode U066 to readjust the scanner leading edge registration (see page 1-3-31).

(12) The leading edge of the image is sporadically misaligned with the original.

Print example	Causes	Check procedures/corrective measures
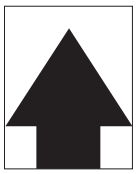	Paper feed clutch, registration clutch or duplex clutch operating incorrectly.	Check the installation of the clutch. If it operates incorrectly, replace it.

(13) Paper is wrinkled.

Print example	Causes	Check procedures/corrective measures
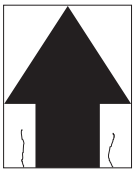	Paper curled.	Check the paper storage conditions.
	Paper damp.	Check the paper storage conditions.
	Defective pressure springs.	Replace the fuser unit (see page 1-5-18).

(14) Image is off-set.

Print example	Causes	Check procedures/corrective measures
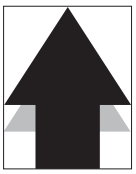	Deformed or worn cleaning blade in the drum unit.	Replace the drum unit (see page 1-5-16).
	Defective fuser unit.	Replace the fuser unit (see page 1-5-18).
	Wrong types of paper.	Check if the paper meets specifications. Replace paper.

(15) Part of image is missing.

Print example	Causes	Check procedures/corrective measures
	Paper damp.	Check the paper storage conditions.
	Paper creased.	Replace the paper.
	Drum condensation.	Perform the drum refresh operation.
	Dirty or flawed drum.	Perform the drum refresh operation. Flawed drum. Replace the drum unit (see page 1-5-16).
	Dirty transfer belt.	Clean the transfer belt. Replace the intermidate transfer unit if it is extremely dirty (see page 1-5-17).
	Dirty transfer roller.	Clean the transfer roller. Replace the transfer roller unit if it is extremely dirty (see page 1-5-17).

(16) Fusing is loose.

Print example	Causes	Check procedures/corrective measures
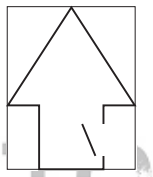	Wrong types of paper.	Check if the paper meets specifications, replace paper.
	Flawed heat roller or press roller.	Replace the fuser unit (see page 1-5-18).
	Defective pressure springs.	
	Defective fuser heater.	

(17) Image is out of focus.

Print example	Causes	Check procedures/corrective measures
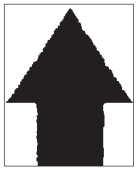	Defective image scanning unit.	Replace the image scanning unit (see page 1-5-21).
	Drum condensation.	Perform the drum refresh operation.

(18) Image center does not align with the original center.

Print example	Causes	Check procedures/corrective measures
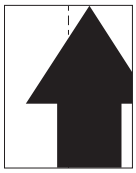	Misadjusted image center line.	Run maintenance item U034 to readjust the center line of image printing (see page 1-3-22).
	Misadjusted scanner center line.	Run maintenance item U067 to readjust the scanner leading edge registration (see page 1-3-32).
	Original is not placed correctly.	Place the original correctly.

1-4-4 Electric problems

If the part causing the problem s not designated as a service part, replace with the assembly comprising the part.
Troubleshooting to each failure must be made in the order of the numbered Problems.

Problem	Causes	Check procedures/corrective measures
(1) The machine does not operate when the main power switch is turned on.	1. No electricity at the power outlet.	Measure the input voltage.
	2. The power cord is not plugged in properly.	Check the contact between the power plug and the outlet.
	3. Broken power cord.	Check for continuity. If none, replace the cord.
	4. Defective main power switch.	Check for continuity across the contacts. If none, replace the power switch.
	5. Defective interlock switch.	Check for continuity across the contacts of interlock switch. If none, replace the power source PWB (see page 1-5-32).
	6. Defective power source PWB.	Replace the power source PWB (see page 1-5-32).
(2) ISU motor does not operate.	1. Defective connector cable or poor contact in the connector.	Reinsert the connector. Also check for continuity within the connector cable. If none, replace the cable. ISU motor and engine PWB (YC17)
	2. Defective drive transmission system.	Check if the rollers and gears rotate smoothly. If not, grease the bushes and gears. Check for broken gears and replace if any.
	3. Defective motor.	Replace the ISU motor.
	4. Defective PWB.	Replace the engine PWB and check for correct operation (see page 1-5-31).
(3) Eject motor does not operate.	1. Defective connector cable or poor contact in the connector.	Reinsert the connector. Also check for continuity within the connector cable. If none, replace the cable. Eject motor and engine PWB (YC6)
	2. Defective drive transmission system.	Check if the rollers and gears rotate smoothly. If not, grease the bushes and gears. Check for broken gears and replace if any.
	3. Defective motor.	Replace the eject motor.
	4. Defective PWB.	Replace the engine PWB and check for correct operation (see page 1-5-31).

Problem	Causes	Check procedures/corrective measures
(4) ID Shutter motor does not operate.	1. Defective connector cable or poor contact in the connector.	Reinsert the connector. Also check for continuity within the connector cable. If none, replace the cable. ID Shutter motor and engine connect PWB (YC17) engine connect PWB and engine PWB (YC9)
	2. Defective drive transmission system.	Check if the rollers and gears rotate smoothly. If not, grease the bushes and gears. Check for broken gears and replace if any.
	3. Defective motor.	Replace the ID Shuttermotor.
	4. Defective PWB.	Replace the engine PWB or engin connect PWB and check for correct operation (see page 1-5-31).
(5) Fuser pressure release motor does not operate.	1. Defective connector cable or poor contact in the connector.	Reinsert the connector. Also check for continuity within the connector cable. If none, replace the cable. Fuser pressure release motor and engine PWB (YC22)
	2. Defective drive transmission system.	Check if the rollers and gears rotate smoothly. If not, grease the bushes and gears. Check for broken gears and replace if any.
	3. Defective motor.	Replace the Fuser pressure release motor.
	4. Defective PWB.	Replace the engine PWB and check for correct operation (see page 1-5-31).
(6) Controller fan motor does not operate.	1. Defective connector cable or poor contact in the connector.	Reinsert the connector. Also check for continuity within the connector cable. If none, replace the cable. Controller fan motor and main PWB (YC41)
	2. Defective motor.	Replace the controller fan motor.
	3. Defective PWB.	Replace the main PWB and check for correct operation (see page 1-5-30).
(7) Power source fan motor does not operate.	1. Defective connector cable or poor contact in the connector.	Reinsert the connector. Also check for continuity within the connector cable. If none, replace the cable. Power source fan motor and engine connect PWB (YC11) engine connect PWB and engine PWB (YC9)
	2. Defective motor.	Replace the power source fan motor.
	3. Defective PWB.	Replace the engine PWB or engine connect PWB and check for correct operation (see page 1-5-31).
(8) Developer fan motor does not operate.	1. Defective connector cable or poor contact in the connector.	Reinsert the connector. Also check for continuity within the connector cable. If none, replace the cable. Developer fan motor and engine connect PWB (YC6) engine connect PWB and engine PWB (YC9)
	2. Defective motor.	Replace the developer fan motor.
	3. Defective PWB.	Replace the engine PWB or engine connect PWB and check for correct operation (see page 1-5-31).

Problem	Causes	Check procedures/corrective measures
(9) LSU fan motor does not operate.	1. Defective connector cable or poor contact in the connector.	Reinsert the connector. Also check for continuity within the connector cable. If none, replace the cable. LSU fan motor and engine connect PWB (YC6) Engine connect PWB and engine PWB (YC9)
	2. Defective motor.	Replace the LSU fan motor.
	3. Defective PWB.	Replace the engine PWB engine connect PWB and check for correct operation (see page 1-5-31).
(10) IH fan motor does not operate.	1. Defective connector cable or poor contact in the connector.	Reinsert the connector. Also check for continuity within the connector cable. If none, replace the cable. IH fan motor and main PWB (YC4)
	2. Defective motor.	Replace the IH fan motor.
	3. Defective PWB.	Replace the engine PWB and check for correct operation (see page 1-5-31).
(11) Fuser fan motor does not operate.	1. Defective connector cable or poor contact in the connector.	Reinsert the connector. Also check for continuity within the connector cable. If none, replace the cable. Fuser fan motor and engine PWB (YC28)
	2. Defective motor.	Replace the Fuser fan motor.
	3. Defective PWB.	Replace the engine PWB and check for correct operation (see page 1-5-31).
(12) Container fan motor does not operate.	1. Defective connector cable or poor contact in the connector.	Reinsert the connector. Also check for continuity within the connector cable. If none, replace the cable. Container fan motor and engine PWB (YC21)
	2. Defective motor.	Replace the container fan motor.
	3. Defective PWB.	Replace the engine PWB and check for correct operation (see page 1-5-31).
(13) IH coil fan motor does not operate.	1. Defective connector cable or poor contact in the connector.	Reinsert the connector. Also check for continuity within the connector cable. If none, replace the cable. IH coil fan motor and engine PWB (YC21)
	2. Defective motor.	Replace the IH coil fan motor.
	3. Defective PWB.	Replace the engine PWB and check for correct operation (see page 1-5-31).
(14) Imaging fan motor does not operate.	1. Defective connector cable or poor contact in the connector.	Reinsert the connector. Also check for continuity within the connector cable. If none, replace the cable. Imaging fan motor and engine connect PWB (YC11) Engine connect PWB and engine PWB
	2. Defective motor.	Replace the Imaging fan motor.
	3. Defective PWB.	Replace the engine PWB or engine connect PWB and check for correct operation (see page 1-5-31).
(15) Paper feed clutch does not operate.	1. Defective connector cable or poor contact in the connector.	Reinsert the connector. Also check for continuity within the connector cable. If none, replace the cable. Paper feed clutch and engine PWB (YC2)
	2. Defective clutch.	Replace the paper feed clutch.
	3. Defective PWB.	Replace the engine PWB and check for correct operation (see page 1-5-31).

Problem	Causes	Check procedures/corrective measures
(16) Mid clutch does not operate.	1. Defective connector cable or poor contact in the connector.	Reinsert the connector. Also check for continuity within the connector cable. If none, replace the cable. Mid clutch and engine PWB (YC2)
	2. Defective clutch.	Replace the mid clutch.
	3. Defective PWB.	Replace the engine PWB and check for correct operation (see page 1-5-31).
(17) Registration clutch does not operate.	1. Defective connector cable or poor contact in the connector.	Reinsert the connector. Also check for continuity within the connector cable. If none, replace the cable. Registration clutch and engine PWB (YC2)
	2. Defective clutch.	Replace the registration clutch.
	3. Defective PWB.	Replace the engine PWB and check for correct operation (see page 1-5-31).
(18) Duplex clutch does not operate.	1. Defective connector cable or poor contact in the connector.	Reinsert the connector. Also check for continuity within the connector cable. If none, replace the cable. Duplex clutch and engine PWB (YC2)
	2. Defective clutch.	Replace the duplex clutch.
	3. Defective PWB.	Replace the engine PWB and check for correct operation (see page 1-5-31).
(19) Developer stop clutch does not operate.	1. Defective connector cable or poor contact in the connector.	Reinsert the connector. Also check for continuity within the connector cable. If none, replace the cable. Developer stop clutch and engine PWB (YC3)
	2. Defective clutch.	Replace the developer stop clutch.
	3. Defective PWB.	Replace the engine PWB and check for correct operation (see page 1-5-31).
(20) MP solenoid does not operate.	1. Defective connector cable or poor contact in the connector.	Reinsert the connector. Also check for continuity within the connector cable. If none, replace the cable. MP solenoid and engine PWB (YC2)
	2. Defective solenoid.	Replace the MP solenoid.
	3. Defective PWB.	Replace the engine PWB and check for correct operation (see page 1-5-31).
(21) Feedshift solenoid does not operate.	1. Defective connector cable or poor contact in the connector.	Reinsert the connector. Also check for continuity within the connector cable. If none, replace the cable. Feedshift solenoid and engine PWB (YC20)
	2. Defective solenoid.	Replace the Feedshift solenoid.
	3. Defective PWB.	Replace the engine PWB and check for correct operation (see page 1-5-31).

Problem	Causes	Check procedures/corrective measures
(22) The message requesting paper to be loaded is shown when paper is present on the cassette.	1. Defective connector cable or poor contact in the connector.	Reinsert the connector. Also check for continuity within the connector cable. If none, replace the cable. Paper sensor and engine connect PWB (YC15) Engine connect PWB to engine PWB (YC9)
	2. Deformed actuator of the paper sensor.	Check visually and replace if necessary.
	3. Defective paper sensor.	Replace the cassette PWB.
	4. Defective PWB.	Replace the engine PWB or engine connect PWB and check for correct operation (see page 1-5-31).
(23) The message requesting paper to be loaded is shown when paper is present on the MP tray.	1. Defective connector cable or poor contact in the connector.	Reinsert the connector. Also check for continuity within the connector cable. If none, replace the cable. MP paper sensor and engine PWB (YC28)
	2. Deformed actuator of the MP paper sensor.	Check visually and replace if necessary.
	3. Defective MP paper sensor.	Replace the MP paper sensor.
	4. Defective PWB.	Replace the engine PWB and check for correct operation (see page 1-5-31).
(24) The size of paper on the cassette is not displayed correctly.	1. Defective connector cable or poor contact in the connector.	Reinsert the connector. Also check for continuity within the connector cable. If none, replace the cable. Paper size width switch and engine PWB (YC14) Paper size length switch and engine PWB (YC14)
	2. Defective cassette size switch.	Replace the paper size width switch or paper size length switch.
	3. Defective PWB.	Replace the engine PWB and check for correct operation (see page 1-5-31).
(25) A paper jam in the paper feed, paper conveying or eject section is indicated when the main power switch is turned on.	1. A piece of paper torn from paper is caught around registration sensor, duplex sensor , feed sensor or eject sensor.	Check visually and remove it, if any.
	2. Defective sensor.	Replace the registration sensor, duplex sensor, feed sensor or eject sensor.
(26) A message indicating cover open is displayed when the front cover or right cover is closed.	1. Deformed actuator of the interlock switch.	Check visually and replace if necessary.
	2. Defective interlock switch.	Replace the interlock switch.

Problem	Causes	Check procedures/corrective measures
(27) The LED lamp does not turn on when original is present on the DP.	1. Defective connector cable or poor contact in the connector.	Reinsert the connector. Also check for continuity within the connector cable. If none, replace the cable. DP original sensor and DP main PWB (YC3) DP main PWB (YC1) and engine PWB (YC18)
	2. Defective DP original sensor.	Replace the DP original sensor.
	3. Defective PWB.	Replace the DPLED PWB and check for correct operation.
		Replace the engine PWB and check for correct operation (see page 1-5-31).
(28) The size of original on the DP is not displayed correctly.	1. Defective connector cable or poor contact in the connector.	Reinsert the connector. Also check for continuity within the connector cable. If none, replace the cable. DP original size width sensor and DP main PWB (YC4) DP original size length sensor and DP main PWB (YC2) DP main PWB (YC1) and engine PWB (YC18)
	2. Defective original size sensor.	Replace the DP original size width sensor or DP original size length sensor.
	3. Defective PWB.	Replace the DP main PWB or engine PWB and check for correct operation (see page 1-5-28,1-5-31).
(29) DP paper feed motor does not operate.	1. Defective connector cable or poor contact in the connector.	Reinsert the connector. Also check for continuity within the connector cable. If none, replace the cable. DP paper feed motor and DP main PWB (YC9) DP main PWB (YC1) and engine PWB (YC18)
	2. Defective drive transmission system.	Check if the rollers and gears rotate smoothly. If not, grease the bushes and gears. Check for broken gears and replace if any.
	3. Defective motor.	Replace the DP paper feed motor.
	4. Defective PWB.	Replace the DP main PWB or engine PWB and check for correct operation (see page 1-5-28,1-5-31).
(30) DP switchback motor does not operate.	1. Defective connector cable or poor contact in the connector.	Reinsert the connector. Also check for continuity within the connector cable. If none, replace the cable. DP switchback motor and DP main PWB (YC9) DP main PWB (YC1) and engine PWB (YC18)
	2. Defective drive transmission system.	Check if the rollers and gears rotate smoothly. If not, grease the bushes and gears. Check for broken gears and replace if any.
	3. Defective motor.	Replace the DP switchback motor.
	4. Defective PWB.	Replace the DP main PWB or engine PWB and check for correct operation (see page 1-5-28,1-5-31).

Problem	Causes	Check procedures/corrective measures
(31) DP paper feed clutch does not operate.	1. Defective connector cable or poor contact in the connector.	Reinsert the connector. Also check for continuity within the connector cable. If none, replace the cable. DP paper feed clutch and DP main PWB (YC8) DP main PWB (YC1) and engine PWB (YC18)
	2. Defective clutch.	Replace the DP paper feed clutch.
	3. Defective PWB.	Replace the DP main PWB or engine PWB and check for correct operation (see page 1-5-28,1-5-31).
(32) DP registration clutch does not operate.	1. Defective connector cable or poor contact in the connector.	Reinsert the connector. Also check for continuity within the connector cable. If none, replace the cable. DP registration clutch and DP main PWB (YC8) DP main PWB (YC1) and engine PWB (YC18)
	2. Defective clutch.	Replace the DP registration clutch.
	3. Defective PWB.	Replace the DP main PWB or engine PWB and check for correct operation (see page 1-5-28,1-5-31).
(33) An original jams when the main power switch is turned on.	1. A piece of paper torn from an original is caught around the DP paper feed sensor, DP registration sensor or DP timing sensor.	Check visually and remove it, if any.
	2. Defective sensor.	Replace the DP paper feed sensor, DP registration sensor or DP timing sensor.
(34) A message indicating cover open is displayed when the DP top cover is closed.	1. Defective connector cable or poor contact in the connector.	Reinsert the connector. Also check for continuity within the connector cable. If none, replace the cable. DP open/close sensor and DP main PWB (YC5) DP main PWB (YC1) and engine PWB (YC18)
	2. Defective DP open/close sensor.	Replace the DP open/close sensor.

1-4-5 Mechanical problems

If the part causing the problem was not supplied, use the unit including the part for replacement.

Problem	Causes/check procedures	Corrective measures
(1) No primary paper feed.	Check if the surfaces of the following rollers are dirty with paper dusts. Pickup roller Paper feed roller MP paper feed roller	Clean with isopropyl alcohol.
	Check if any of the following rollers is deformed. Pickup roller Paper feed roller MP paper feed roller	Check visually and replace any deformed (see page 1-5-10, 1-5-11).
	Defective paper feed clutch installation.	Check visually and remedy if necessary.
(2) No secondary paper feed.	Check if the surfaces of the following rollers are dirty with paper powder. Right registration roller Left registration roller	Clean with isopropyl alcohol.
	Defective registration clutch installation.	Check visually and remedy if necessary.
(3) Skewed paper feed.	Paper width guide in the cassette are installed incorrectly.	Check the paper width guide visually and remedy or replace if necessary.
(4) Multiple sheets of paper are fed.	Check if the paper is excessively curled.	Change the paper.
	Paper is loaded incorrectly.	Load the paper correctly.
	Check if the retard roller is worn.	Replace the retard roller if it is worn (see page 1-5-10).
(5) Paper jams.	Check if the paper is excessively curled.	Change the paper.
	Check if the contact between the right and left registration rollers is correct.	Check visually and remedy if necessary.
	Check if the heat roller or press roller is extremely dirty or deformed.	Check visually and replace the fuser unit (see page 1-5-18).
(6) Toner drops on the paper conveying path.	Check if the drum unit or developer unit is extremely dirty.	Clean the drum unit or developer unit.

Problem	Causes/check procedures	Corrective measures
(7) Abnormal noise is heard.	Check if the rollers, pulleys and gears operate smoothly.	Grease the bushes and gears.
	Check if the following clutches are installed correctly. Paper feed clutch Mid clutch Registration clutch Duplex clutch	Check visually and remedy if necessary.
(8) No primary original feed.	Check if the surfaces of the following pulleys are dirty with paper powder. DP forwarding pulley DP paper feed roller	Clean with isopropyl alcohol.
	Check if the following pulleys is deformed. DP forwarding pulley DP paper feed roller	Check visually and replace any deformed (see page 1-5-26).
(9) Multiple sheets of original are fed.	Original is not correctly set.	Set the original correctly.
	Check if the DP separation pulley is worn.	Replace the DP separation pulley if it is worn (see page 1-5-26).
(10) Originals jam.	Originals being used do not conform with the specifications.	Use only originals conforming to the specifications.
	Check if the surfaces of the following pulleys are dirty with paper powder. DP forwarding pulley DP paper feed roller	Clean with isopropyl alcohol.
	Check if the contact between the registration roller and registration pulley is correct.	Check visually and remedy if necessary.
	Check if the contact between the conveying roller and conveying pulley is correct.	Check visually and remedy if necessary.
	Check if the contact between the eject roller and eject pulley is correct.	Check visually and remedy if necessary.
	Check if the contact between the switchback roller and switchback pulley is correct.	Check visually and remedy if necessary.

1-4-6 Send error code

This section describes the scanning errors and descriptions, preventive actions, as well as corrective actions.
Error codes not described here could fall within software errors.
If such an error is encountered, turn power off then on, and advise the service representative.

(1) Scan to SMB error codes

Code	Contents	Check procedures/corrective measures
1101	Host destined does not exist on the network.	1. Confirm the destined host. 2. Confirm thedevice's network parameters. 3. Confirm the parameters of the network to which the device is connected are correct.
1102	Login to the host has failed.	1. Confirm user name and password. 2. Confirm the parameters of the network to which the device is connected are correct. 3. Check the host if the folder is properly shared.
1103	Destined host, folder, and/or file names are invalid.	1. Check illegal characters are not contained within these names. 2. Check the name of the folder and files conform with the naming syntax. 3. Confirm destined host and folder.
1105	SMB protocol is not enabled.	1. Confirm device's SMB protocols.
2101	Login to the host has failed.	1. Confirm the destined host. 2. Confirm that the LAN cable is properly connected to the device. 3. Check the SMB port number. 4. Confirm the device's network parameters. 5. Confirm the parameters of the network to which the device is connected are correct.
2201	Writing scanned data has failed.	1. Check the file name to save the scanned data. 2. Confirm the device's network parameters. 3. Confirm the parameters of the network to which the device is connected are correct.

(2) Scan to FTP error codes

Code	Contents	Check procedures/corrective measures
1101	FTP server does not exist on the network.	1. Check the FTP server name. 2. Confirm device's network parameters. 3. Confirm the parameters of the network to which the device is connected are correct.
1102	Login to the FTP server has failed.	1. Confirm user name and password. 2. Check the FTP server name.
1103	Destined folder is invalid.	1. Check that the illegal characters are not contained within these names. 2. Check the FTP server name.
1105	FTP protocol is not enabled.	1. Confirm device's FTP protocols.
1131	Initializing TLS has failed.	1. Confirm device's security parameters.
1132	TLS negotiation has failed.	1. Confirm device's security parameters. 2. Check the FTP server name.
2101	Access to the FTP server has failed.	1. Check the FTP server name. 2. Confirm that the LAN cable is properly connected to the device. 3. Check the FTP port number. 4. Confirm device's network parameters. 5. Confirm the network parameters the device is connected. 6. Check the FTP server name.
2102	Access to the FTP server has failed. (Connection timeout)	1. Check the FTP server name. 2. Check the FTP port number. 3. Confirm device's network parameters. 4. Confirm the network parameters the device is connected. 5. Check the FTP server name.
2201	Connection with the FTP server has failed.	1. Confirm device's network parameters. 2. Confirm the network parameters the device is connected. 3. Confirm destined folder. 4. Check the FTP server name.
2202	Connection with the FTP server has failed. (Timeout)	1. Confirm device's network parameters. 2. Confirm the network parameters the device is connected.
2231	Connection with the FTP server has failed. (FTPS communication)	1. Confirm device's network parameters. 2. Confirm the network parameters the device is connected.
3101	FTP server responded with an error.	1. Confirm device's network parameters. 2. Confirm the network parameters the device is connected. 3. Check the FTP server.

(3) Scan to E-mail error codes

Code	Contents	Check procedures/corrective measures
1101	SMTP/POP3 server does not exist on the network.	1. Check the SMTP/POP3 server name. 2. Confirm device's network parameters. 3. Confirm the parameters of the network to which the device is connected are correct.
1102	Login to the SMTP/POP3 server has failed.	1. Confirm user name and password. 2. Check the SMTP/POP3 server.
1104	The domain the destined address belongs is prohibited by scanning restriction.	1. Confirm device's SMTP parameters.
1105	SMTP protocol is not enabled.	1. Confirm device's SMTP protocols.
1106	Sender’s address is not specified.	1. Confirm device's SMTP protocols.
2101	Connection to the SMTP/POP3 server has failed.	1. Check the SMTP/POP3 server name. 2. Confirm that the LAN cable is properly connected to the device. 3. Check the SMTP/POP3 port number. 4. Confirm device's network parameters. 5. Confirm the network parameters the device is connected. 6. Check the SMTP/POP3 server.
2102	Connection to the SMTP/POP3 server has failed. (Connection timeout)	1. Check the SMTP/POP3 server name. 2. Check the SMTP/POP3 port number. 3. Confirm device's network parameters. 4. Confirm the network parameters the device is connected. 5. Check the SMTP/POP3 server.
2201	Connection to the SMTP/POP3 server has failed.	1. Confirm device's network parameters. 2. Confirm the network parameters the device is connected.
2202	Connection to the SMTP/POP3 server has failed. (Timeout)	1. Confirm device's network parameters. 2. Confirm the network parameters the device is connected.
2204	The size of scanning exceeded its limit.	1. Confirm device's network parameters.
3101	SMTP/POP3 server responded with an error.	1. Confirm device's network parameters. 2. Confirm the network parameters the device is connected. 3. Check the SMTP/POP3 server.
3201	No SMTP authentication is found.	1. Check the SMTP server. 2. The device supports SMTP authentication services including CRAM-MD5, DIGEST-MD5, PLAIN and LOGIN.

1-5-1 Precautions for assembly and disassembly

(1) Precautions

Before starting disassembly, press the Power key on the operation panel to off. Make sure that the Power lamp is off before turning off the main power switch. Unplug the power cable from the wall outlet.
When the fax kit is installed, be sure to disconnect the modular code before starting disassembly.
When handling PWBs (printed wiring boards), do not touch parts with bare hands.
The PWBs are susceptible to static charge.
Do not touch any PWB containing ICs with bare hands or any object prone to static charge.
When removing the hook of the connector, be sure to release the hook.
Take care not to get the cables caught.
To reassemble the parts, use the original screws. If the types and the sizes of screws are not known, refer to the PARTS LIST.

(2) Drum unit

Note the following when handling or storing the drum unit.
When removing the drum unit, never expose the drum surface to strong direct light.
Keep the drum unit at an ambient temperature between -20°C/-4°F and 40°C/104°F and at a relative humidity not higher than 85% RH. Avoid abrupt changes in temperature and humidity.
Avoid exposure to any substance which is harmful to or may affect the quality of the drum unit.
Do not touch the drum surface with any object. Should it be touched by hands or stained with oil, clean it.

(3) Toner

Store the toner containers in a cool, dark place.
Avoid exposing the toner containers to direct light and high humidity.

(4) How to tell a genuine Kyocera Mita toner container

As a means of brand protection, the Kyocera Mita toner container utilizes an optical security technology to enable visual validation. A validation viewer is required to accomplish this.

Hold the validation viewer over the left side part of the brand protection seal on the toner container. Through each window of the validation viewer, the left side part of the seal should be seen as follows:

A black-colored band when seen through the left side window (●)

A shiny or gold-colored band when seen through the right side window (☼)

The above will reveal that the toner container is a genuine Kyocera Mita branded toner container, otherwise, it is a counterfeit.

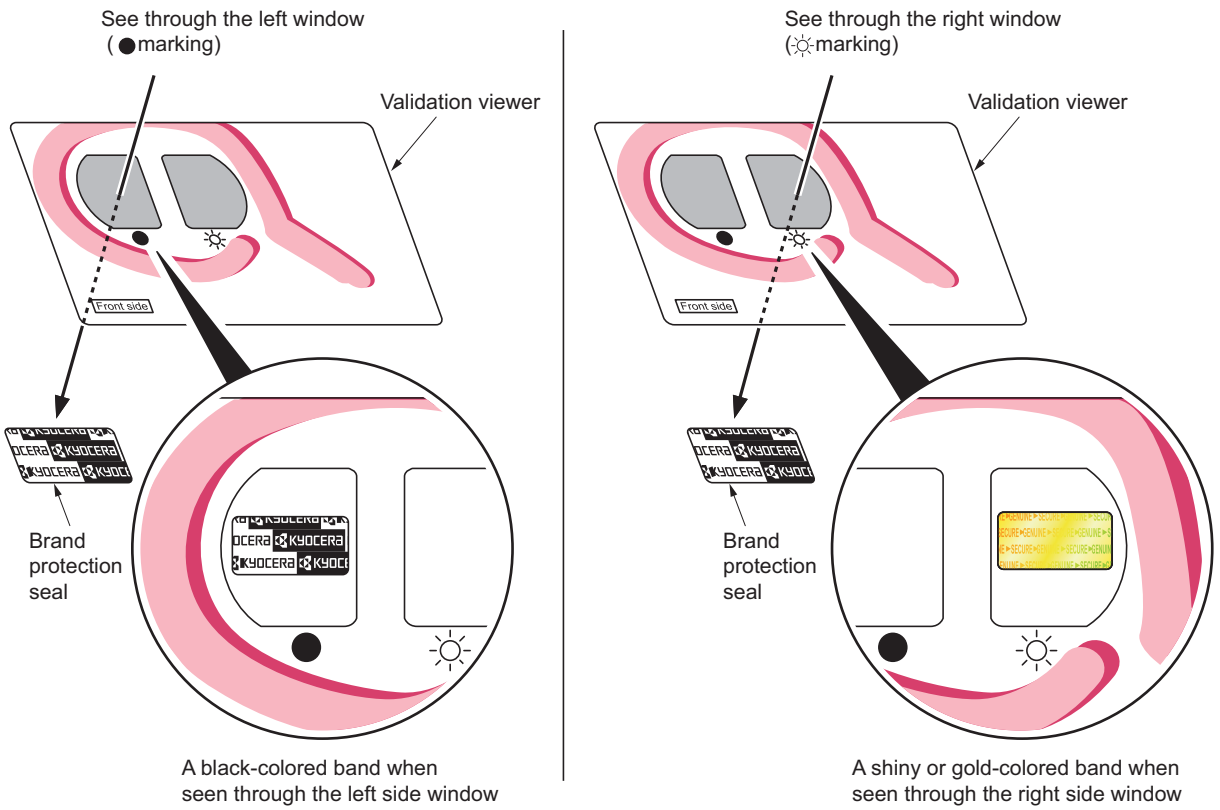

Figure 1-5-1

The brand protection seal has an incision as shown below to prohibit reuse.

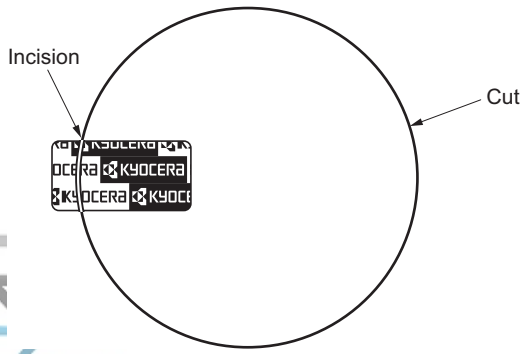

Figure 1-5-2

1-5-2 Outer covers

(1) Detaching and refitting the front cover

Procedure

1. Remove the cassette.
   (See page 1-5-10)
2. Open the front cover.

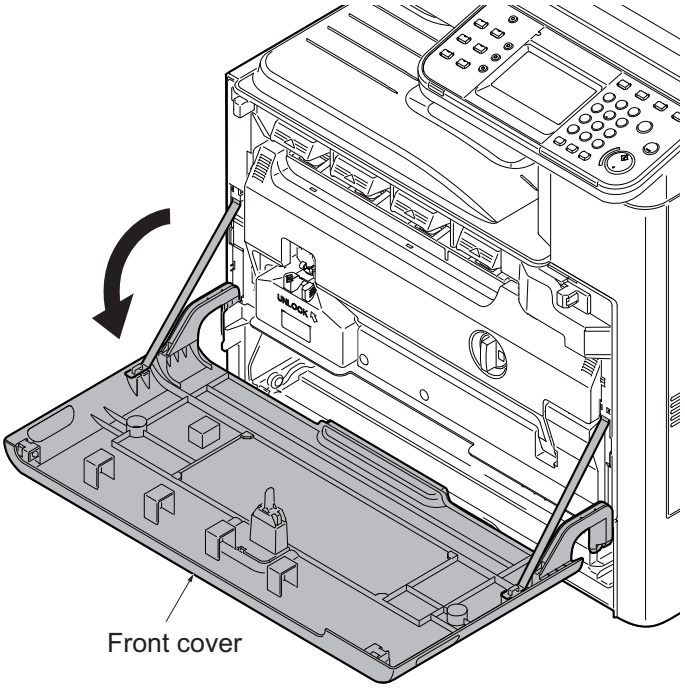

Figure 1-5-3

3. Unhitch the straps by squeezing the hooks inward as shown.

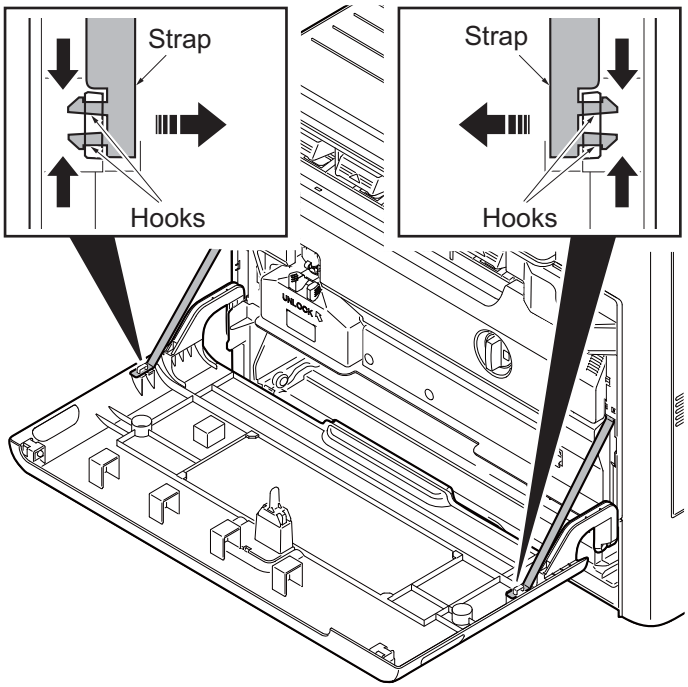

Figure 1-5-4

4. Remove two fulcrum axes of the front cover.
5. Remove the front cover.

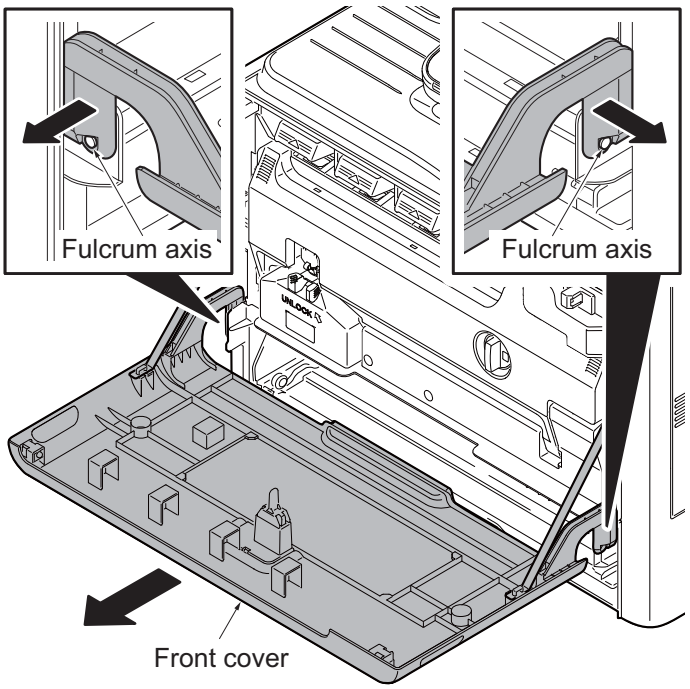

Figure 1-5-5

(2) Detaching and refitting the rear cover

Procedure

1. Remove the power cord.
   If the document feeder is installed, remove its interface connector.
2. Release four hooks and then remove the controller box cover.

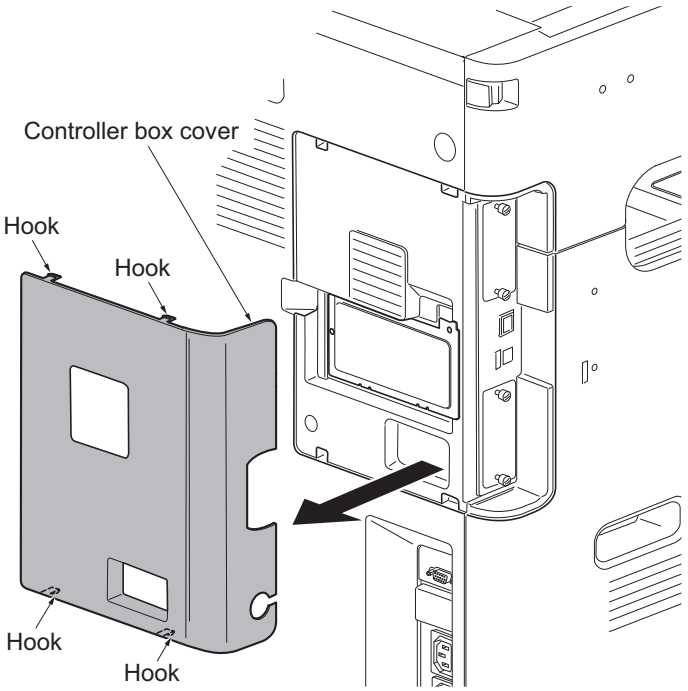

Figure 1-5-6

3. Remove two screws of the DP interface connector and then remove the DP interface connector.
   (See page 1-5-25)
4. Remove six screws.
5. Pull the rear cover upwards and then release three hooks.
6. Remove the rear cover.

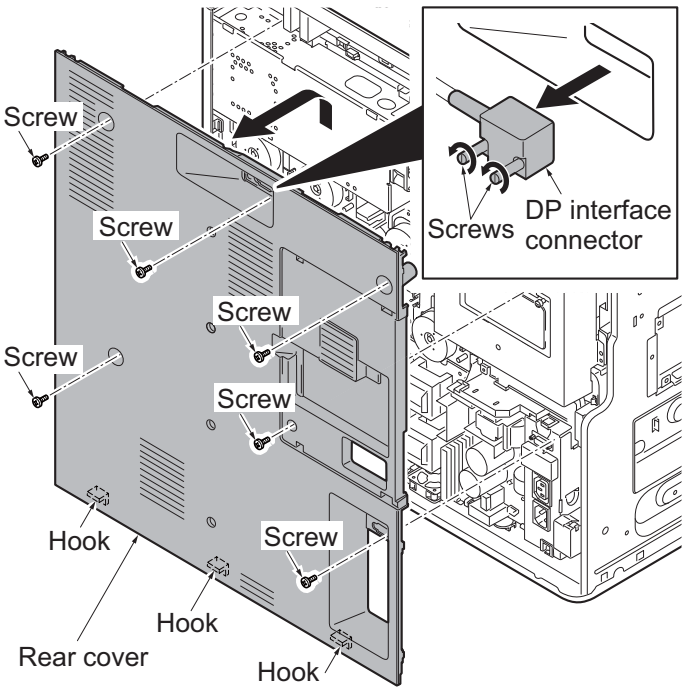

Figure 1-5-7

(3) Detaching and refitting the inner tray

Procedure

1. Release the lock lever and then remove the job separator tray.

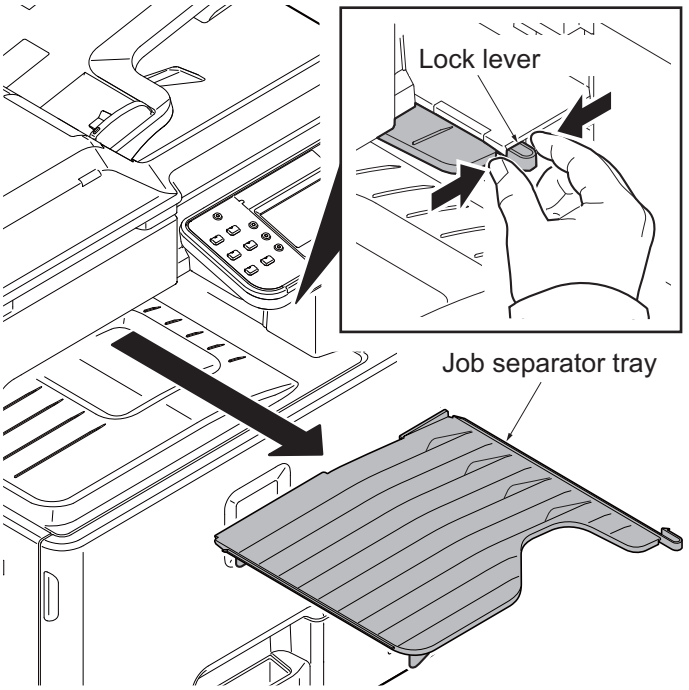

Figure 1-5-8

2. Remove the rear cover. (See page 1-5-5)
3. Remove the cassette. (See page 1-5-10)
4. Open the front cover.(See page 1-5-3)
5. Remove two screws.
6. Release three hooks A.
7. Pull the left lower cover upwards and then release ten hooks B.
8. Remove the left lower cover.

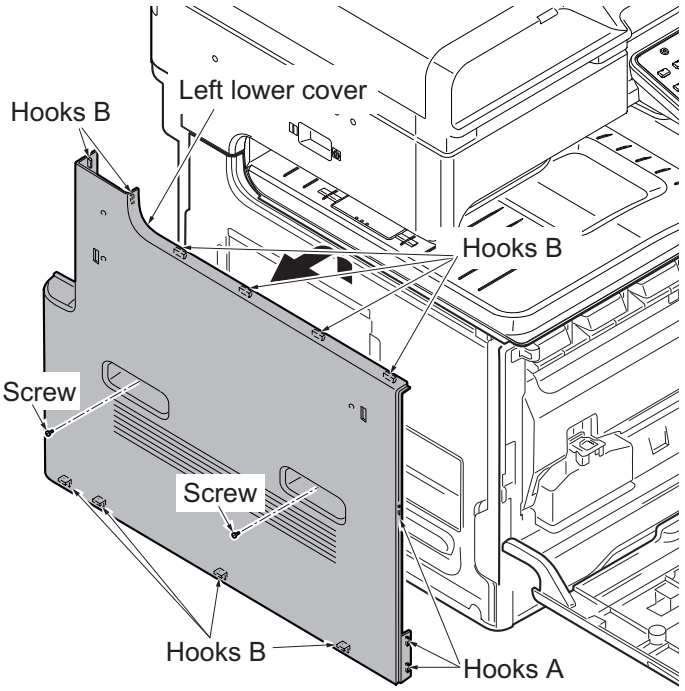

Figure 1-5-9

9. Release the hook of the front upper cover.
10. Tilt the front upper cover forward.

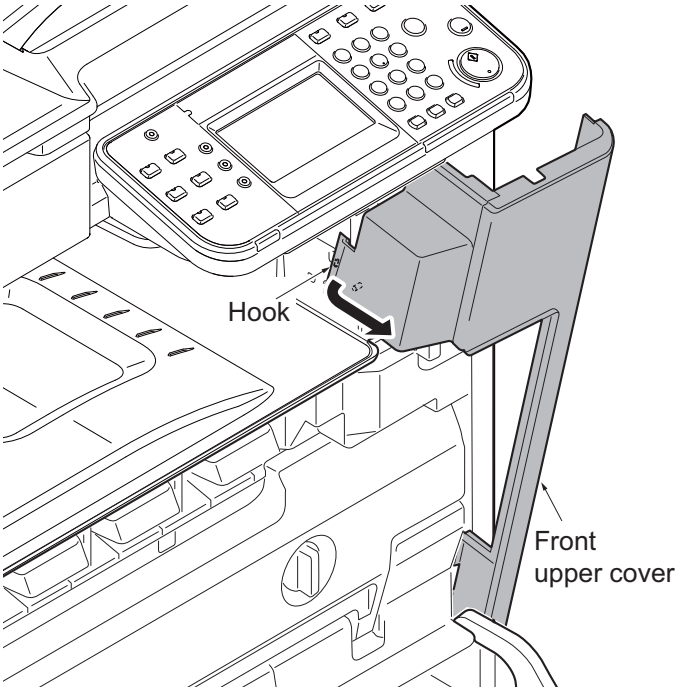

Figure 1-5-10

11. Remove the inner tray.

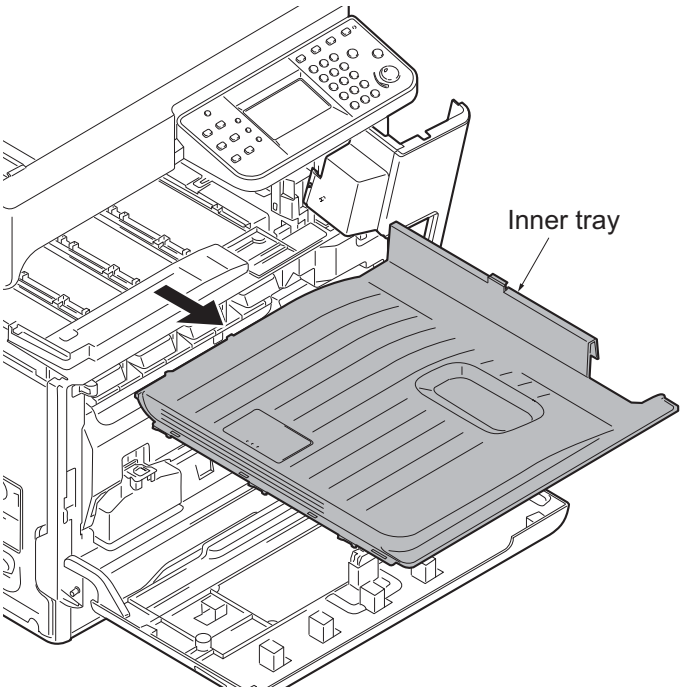

Figure 1-5-11

(4) Detaching and refitting the eject rear cover

Procedure

1. Release two hooks by using a flat screwdriver and then remove the tray left cover.

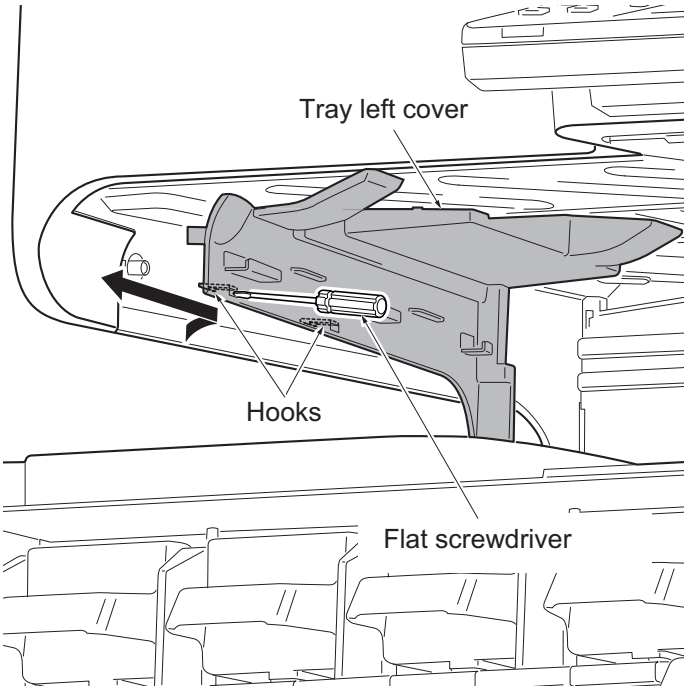

Figure 1-5-12

2. Pull the left upper cover downwards and then release two hooks A.
3. Pull the left upper cover upwards and then release three hooks B.
4. Remove the left upper cover.

   ATTENTION: At the time of replace the left upper cover, confirm the position of the scaner lock lever .

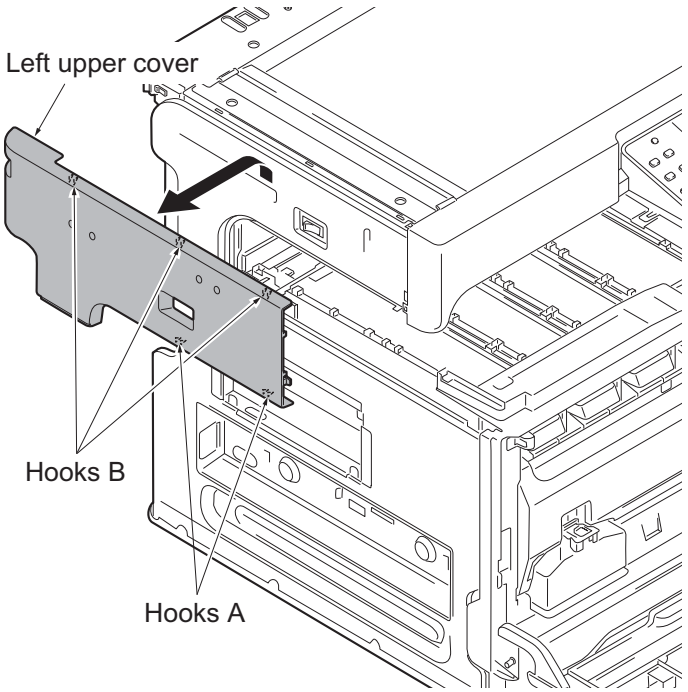

Figure 1-5-13

5. Remove the eject rear cover.

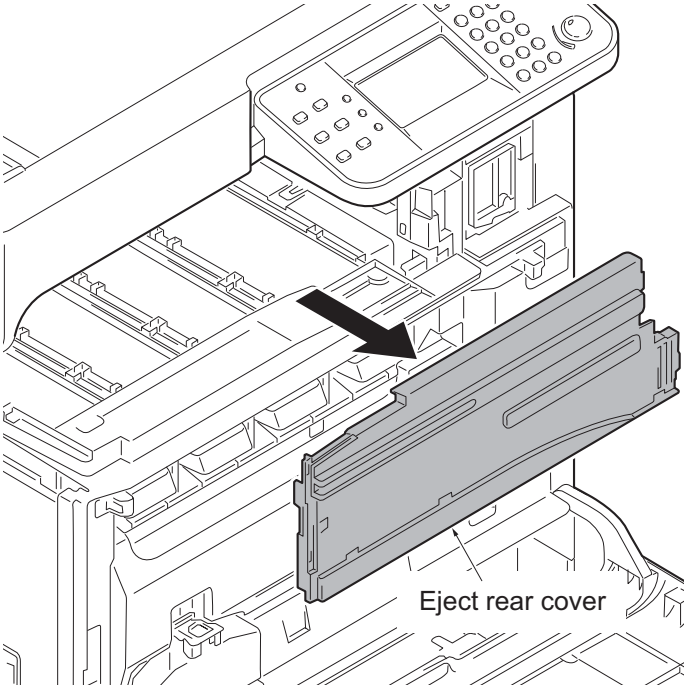

Figure 1-5-14

1-5-3 Paper feed section

(1) Detaching and refitting the primary paper feed unit

Procedure

1. Remove the cassette.

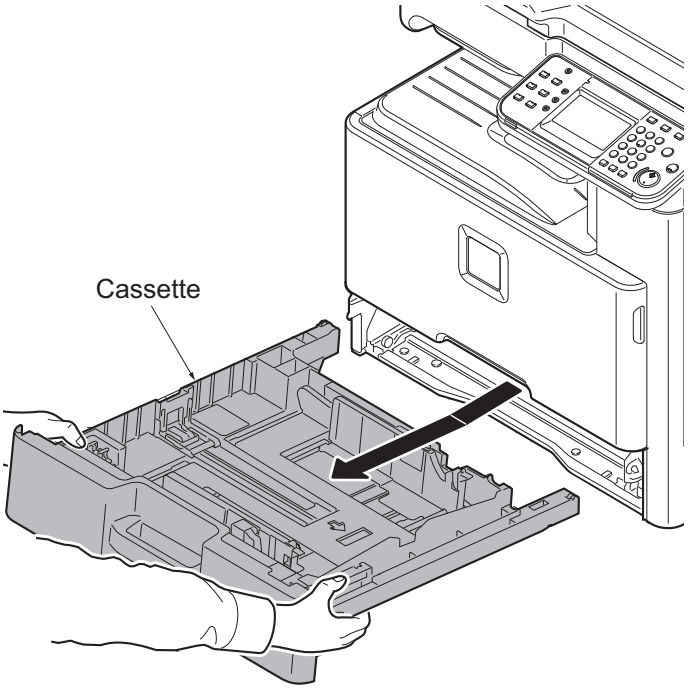

Figure 1-5-15

2. Release the feed lever (yellow) and then remove the primary paper feed unit.
3. Check or replace the primary paper feed unit and refit all the removed parts.

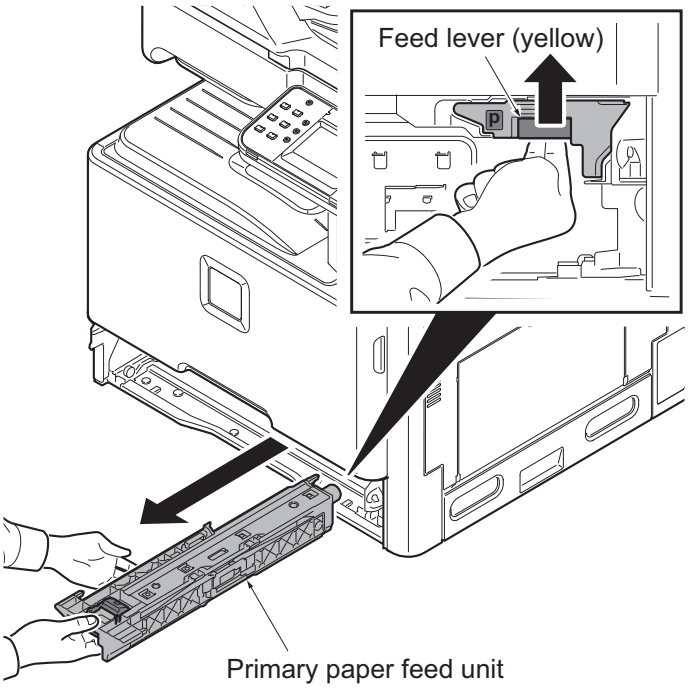

Figure 1-5-16

(2) Detaching and refitting the MP paper feed roller and MP separation pad

Procedure

1. Open the right cover 1.

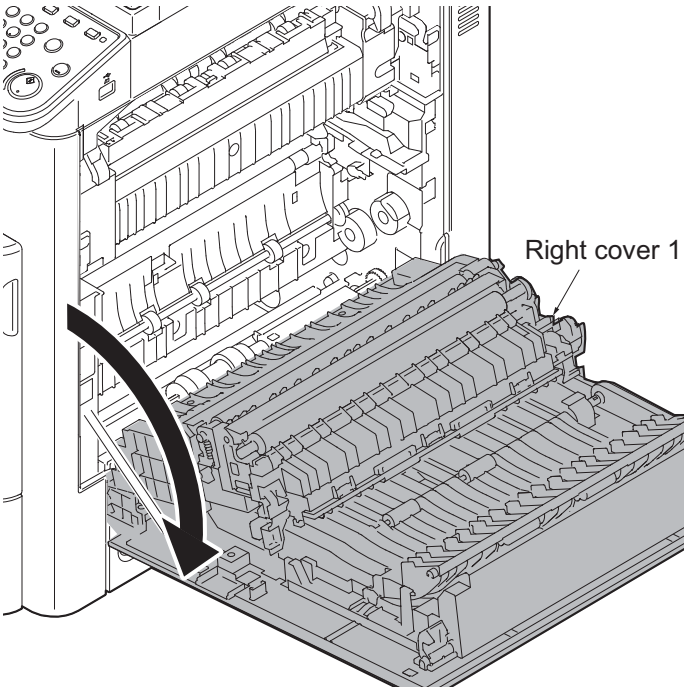

Figure 1-5-17

2. While squeezing the holder inward, remove the MP paper feed roller.

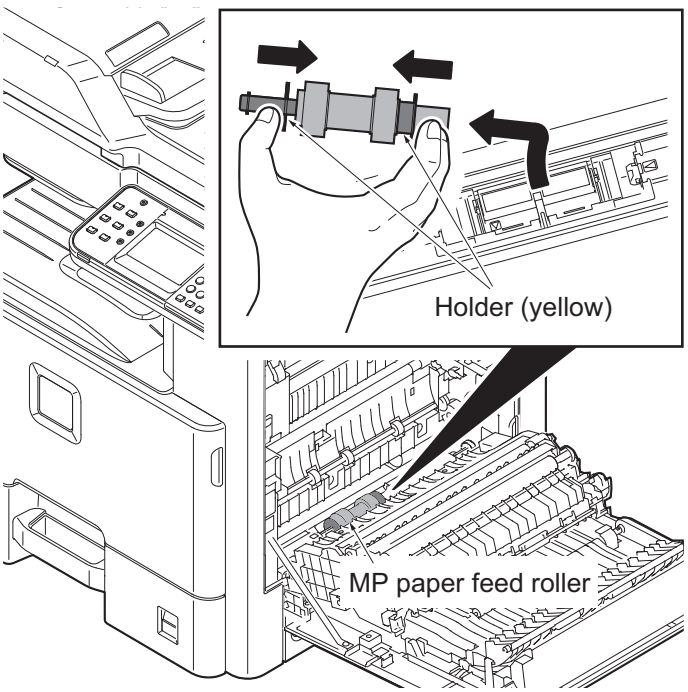

Figure 1-5-18

3. Tilt the MP separation pad forward and then remove it upwards.
4. Check or replace the MP paper feed roller and MP separation pad and refit all the removed parts.

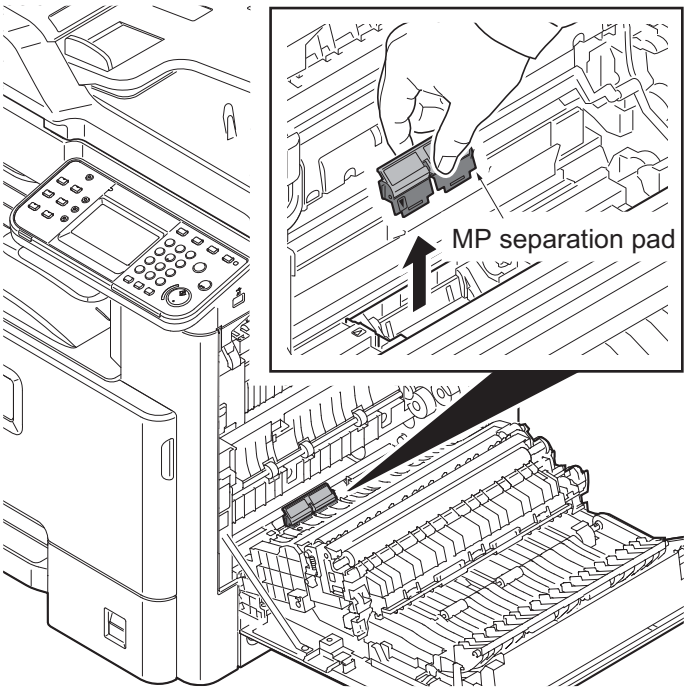

Figure 1-5-19

(3) Detaching and refitting the registration roller

Procedure

1. Open the right cover 1 (See page 1-5-11).
2. Remove the transfer roller unit. (See page 1-5-17)
3. Remove two springs at the front and back of the registration roller right.
4. Remove the cap and gear.
5. Slide and remove the registration roller right.
6. Check or replace the registration roller right and refit all the removed parts.

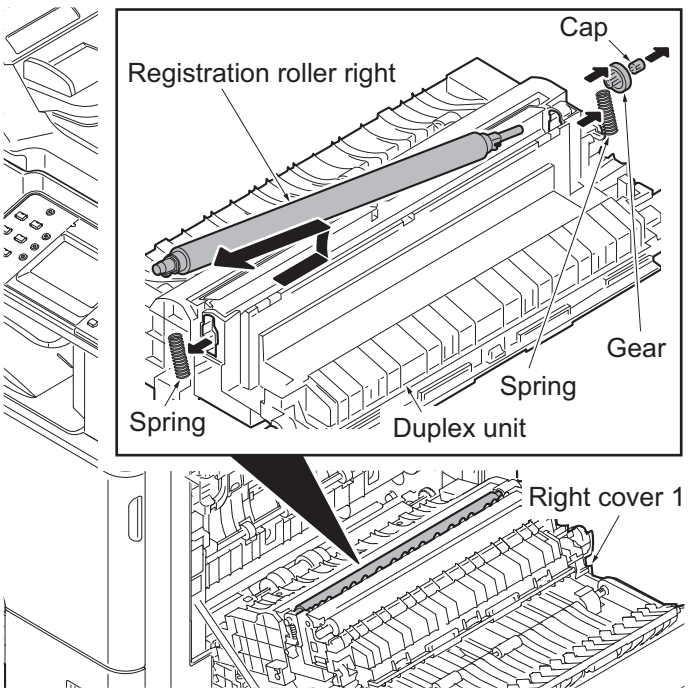

Figure 1-5-20

(4) Detaching and refitting the registration cleaner

Procedure

1. Open the front cover. (See page 1-5-3)
2. Open the duct cover. (See page 1-5-15)
3. Set the cleaner lever (yellow) up and draw the registration cleaner frontward.
4. Check or replace the registration cleaner and refit all the removed parts.

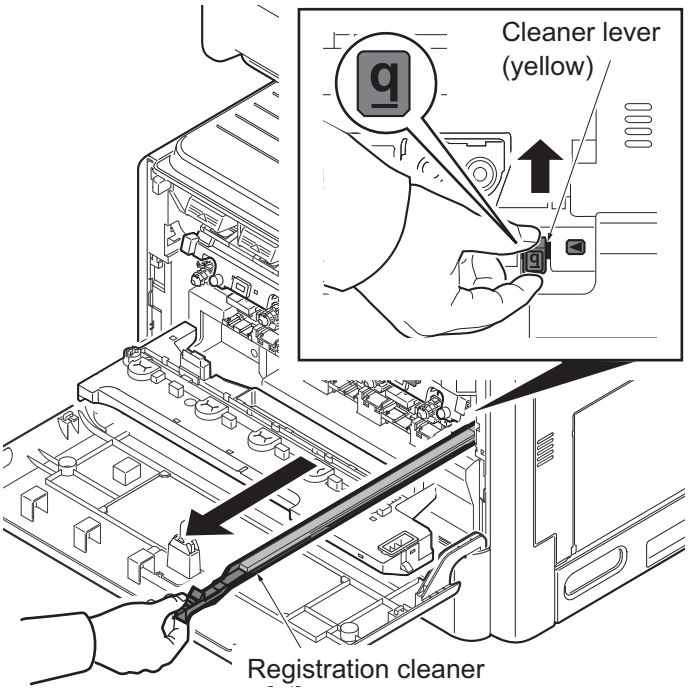

Figure 1-5-21

(5) Detaching and refitting the MP tray

Procedure

1. Open the MP tray.
2. Release two fulcrums of the MP tray by using a flat screwdriver.
3. Pull two straps upwards to remove.
4. Remove the MP tray.

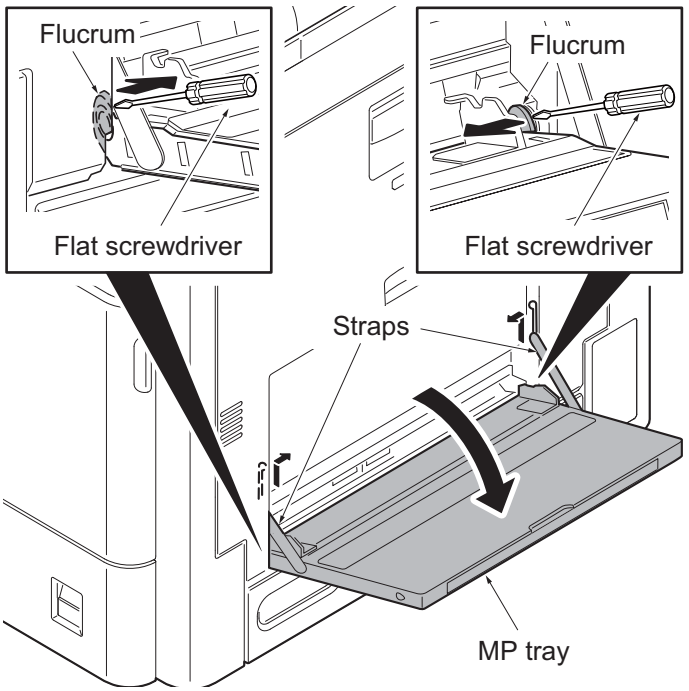

Figure 1-5-22

1-5-4 Developing section

(1) Detaching and refitting the developing unit

Procedure

1. Open the front cover. (See page 1-5-3)
2. Release the lock lever and then remove the waste toner box.

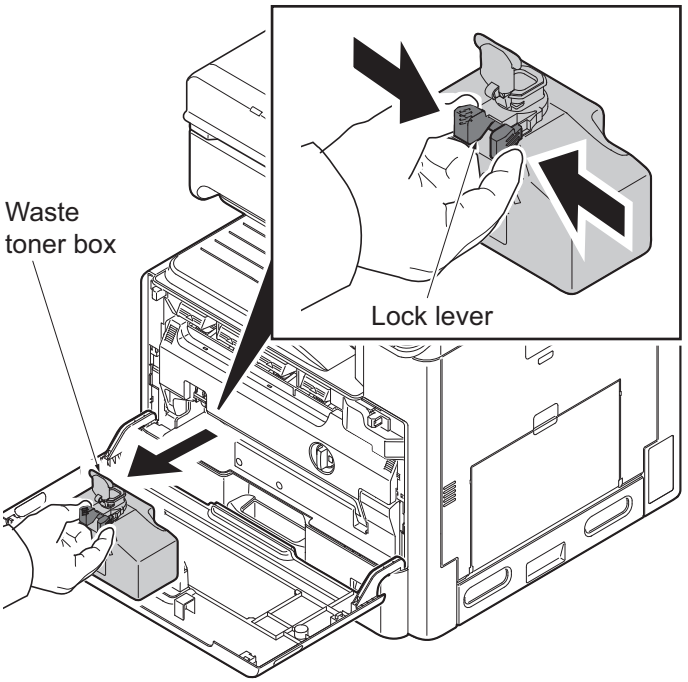

Figure 1-5-23

3. Turn the lock lever (yellow) to the right and then knock down the duct cover forwards.

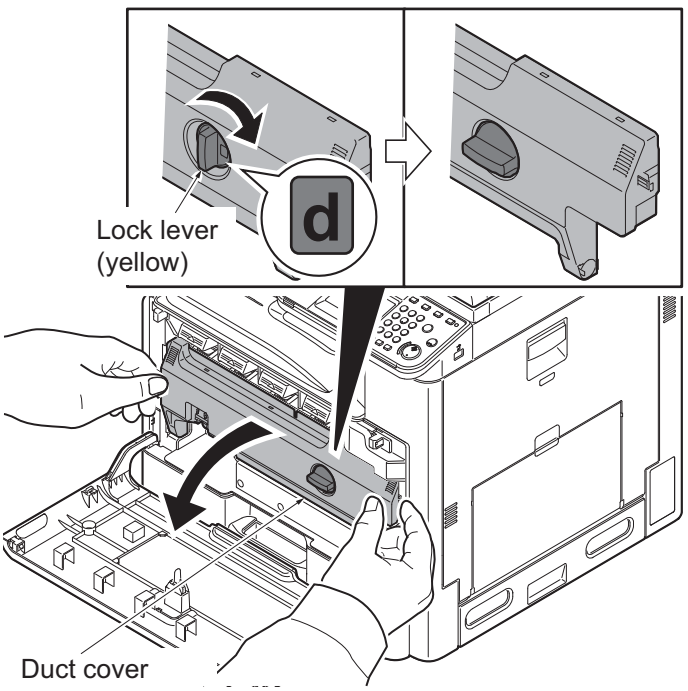

Figure 1-5-24

4. Lift the lever and turn the duct holder upwards.

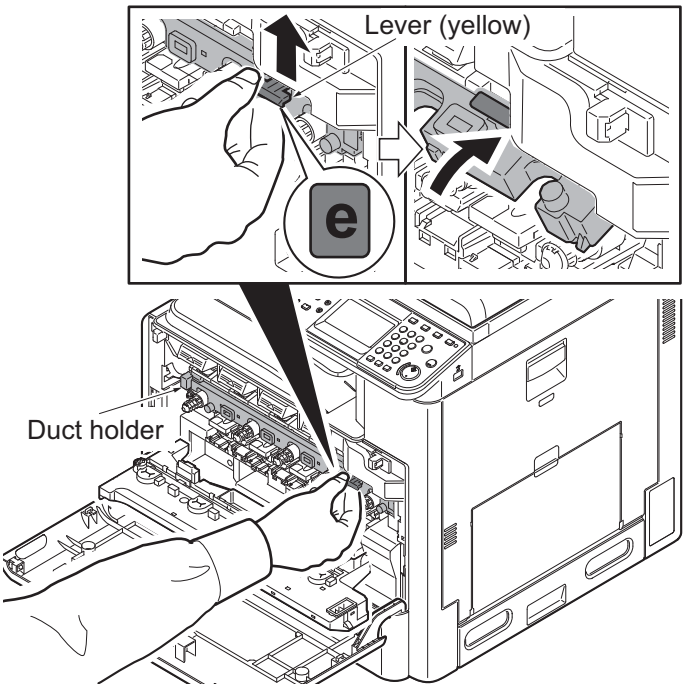

Figure 1-5-25

5. Push the lock lever (yellow) of the development unit upwards and then remove the developer unit.
6. Check or replace the developer unit and refit all the removed parts.

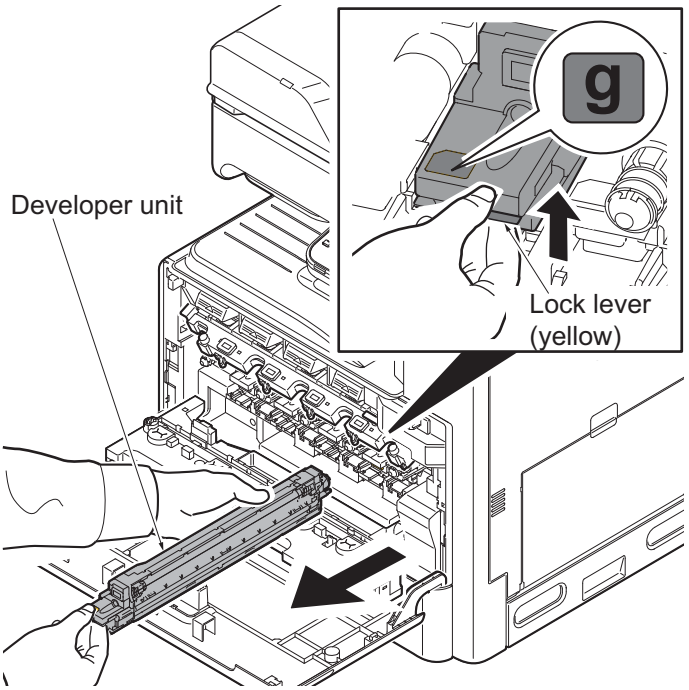

Figure 1-5-26

1-5-5 Drum section

(1) Detaching and refitting the drum unit

Procedure

1. Open the front cover. (See page 1-5-3)
2. Release the waste toner box. (See page 1-5-14)
3. Turn the lock lever to the right and then knock down the duct cover forwards. (See page 1-5-15)
4. Lift the lever and turn the duct holder upwards.(See page1-5-11)
5. Push the lock lever (yellow) of the drum unit upwards and then remove the drum unit.
6. Check or replace the drum unit and refit all the removed parts.

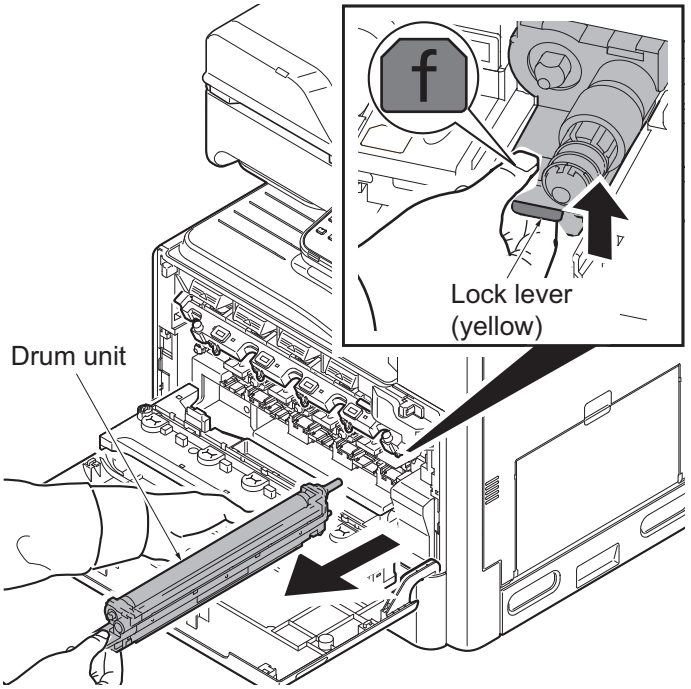

Figure 1-5-27

(2) Detaching and refitting the chager roller unit

Procedure

1. Remove the drum unit. (See page 1-5-16)
2. Release two lock levers and then remove the chager roller unit.
3. Check or replace the chager roller unit and refit all the removed parts.

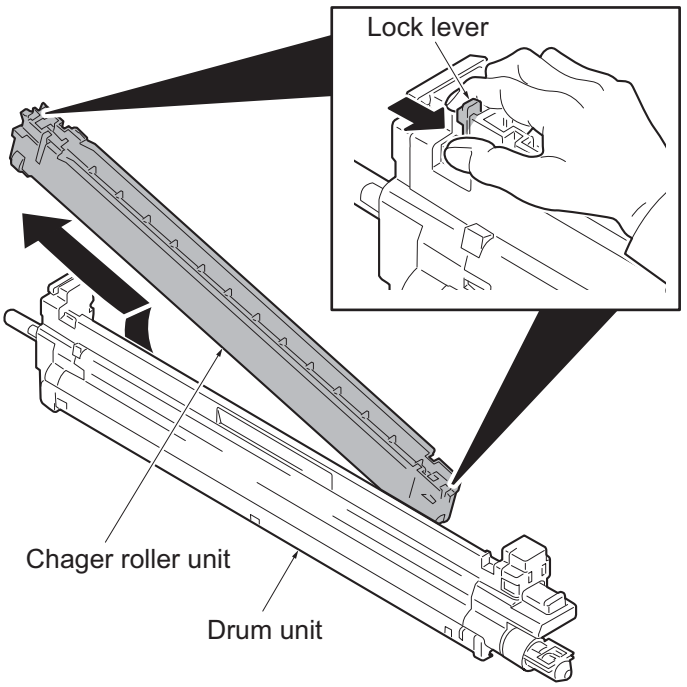

Figure 1-5-28

1-5-6 Transfer/separation section

(1) Detaching and refitting the intermediate transfer unit

Procedure

1. Open the right cover 1.
   (See page 1-5-11)
2. Pull the intermediate transfer unit forwards by holding two knobs A(yellow)
3. .Change to the knob B from the knob A and then remove the intermediate transfer unit.
4. Check or replace the intermediate transfer unit and refit all the removed parts.

   CAUTION: When refitting the transfer roller unit, insert it in place until it clicks in.

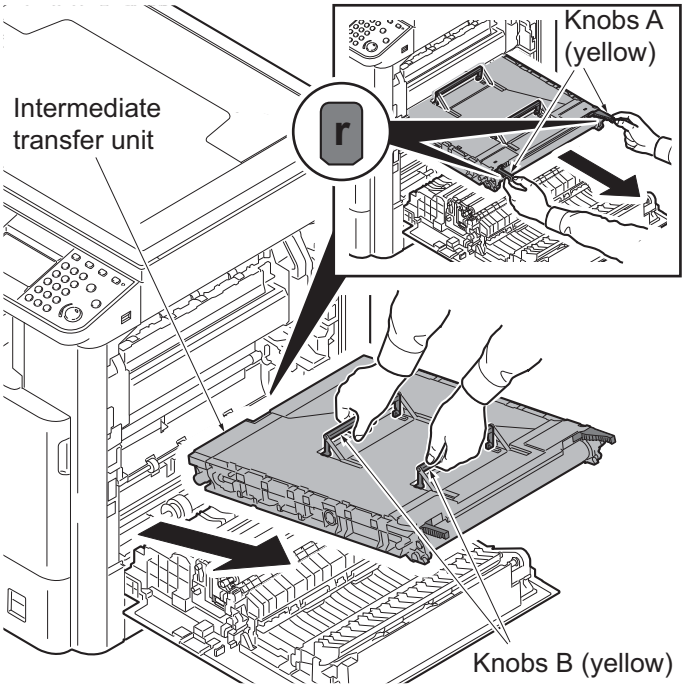

Figure 1-5-29

(2) Detaching and refitting the secondary transfer roller unit

Procedure

1. Open the right cover 1.
   (See page 1-5-11)
2. Release two lock levers (yellow) and then remove the secondary transfer roller unit.
3. Check or replace the secondary transfer roller unit and refit all the removed parts.

   ATTENTION: When refitting the secondary transfer roller unit, insert it in place until it clicks in.

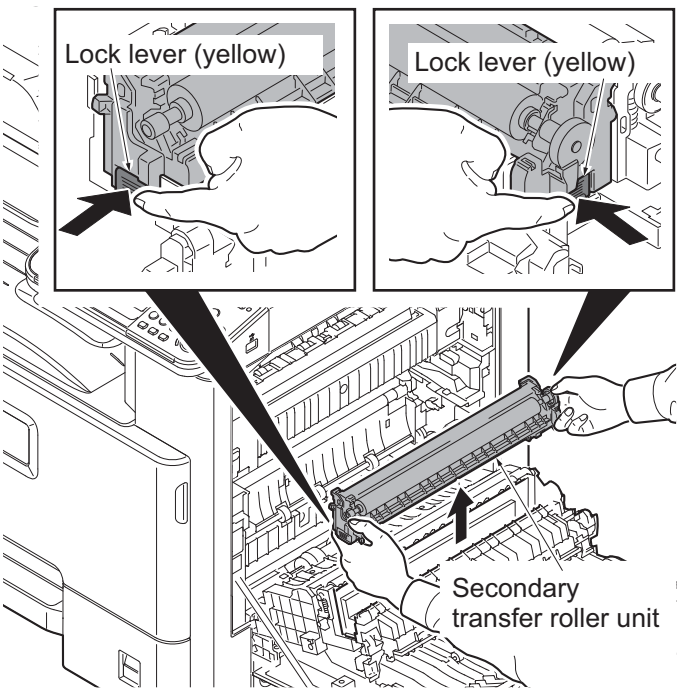

Figure 1-5-30

1-5-7 Fuser section

(1) Detaching and refitting the fuser unit

Procedure

1. Open the right cover 1.
   (See page 1-5-11)
2. Release two mount levers (yellow) and then pull the fuser unit forwards

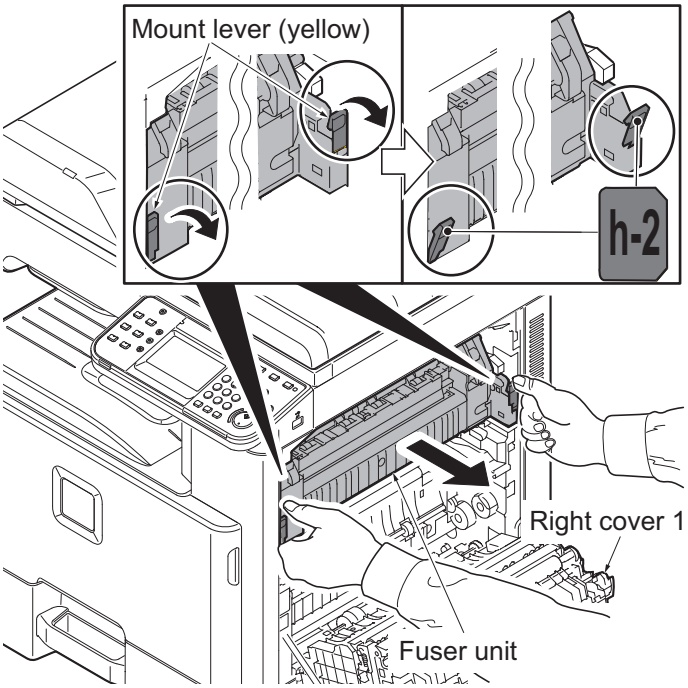

Figure 1-5-31

3. Grip two knobs (yellow) of the fuser unit.
4. Lift the fuser unit upwards and then remove the fuser unit.
5. Check or replace the fuser unit and refit all the removed parts.

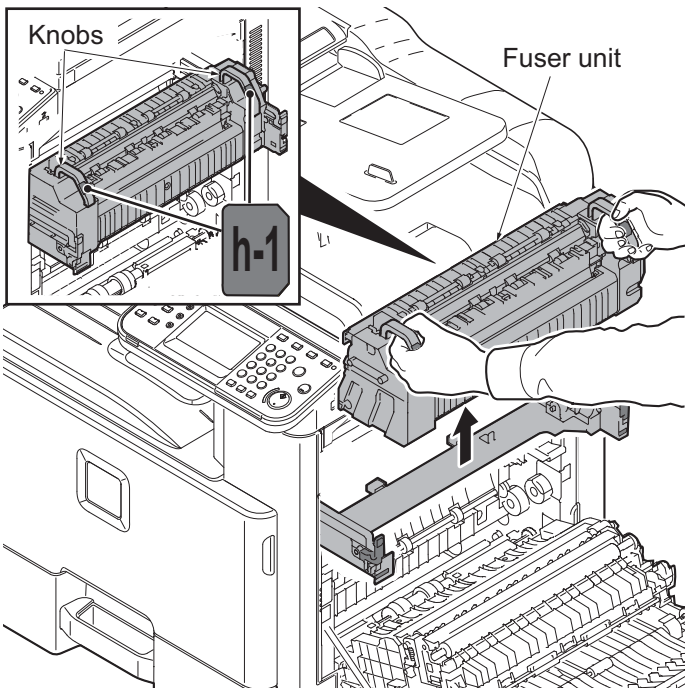

Figure 1-5-32

1-5-8 Drive section

(1) Detaching and refitting the conveying motor

Procedure

1. Remove the rear cover.
   (See page 1-5-5)
2. Remove the connector from the conveying motor PWB.
3. Remove three screws and then remove the conveying motor.
4. Check or replace the conveying motor and refit all the removed parts.

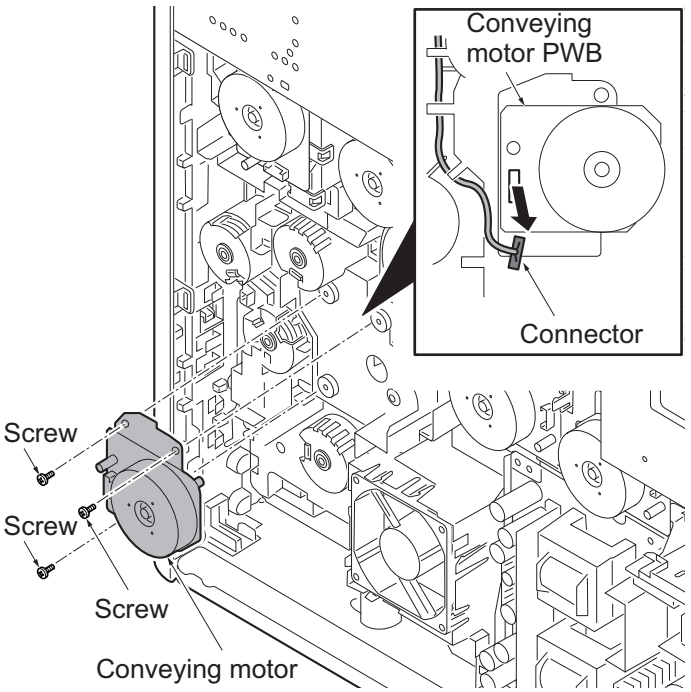

Figure 1-5-33

(2) Detaching and refitting the drive unit

Procedure

1. Remove the rear cover.
   (See page 1-5-5)
2. Remove three connectors and then release the waires from the hooks.
3. Remove four screws and then remove the drive unit.
4. Check or replace the drive unit and refit all the removed parts.

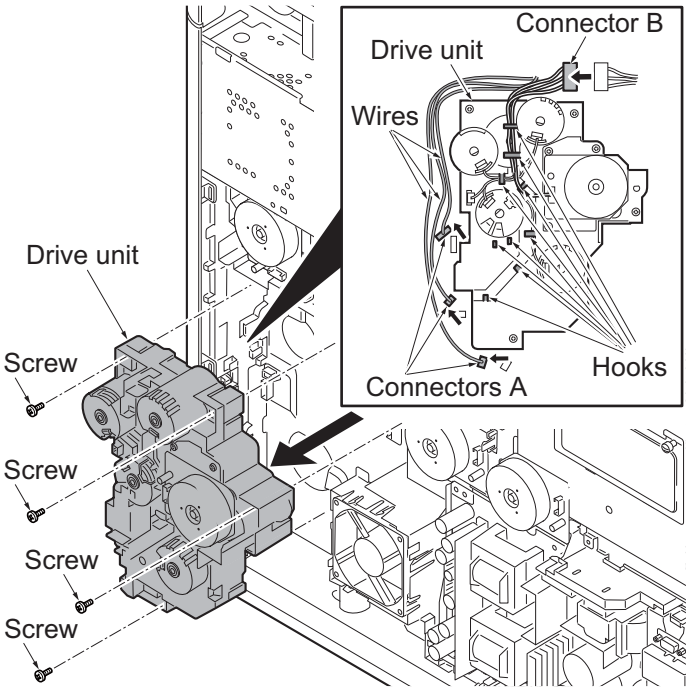

Figure 1-5-34

1-5-9 Optical section

(1) Detaching and refitting the laser scanner unit

Procedure

1. Remove the cassette.
   (See page 1-5-10)
2. Remove the rear cover and left lower cover.(See page 1-5-5,1-5-6)
3. Remove two connectors.
4. Remove four screws and then remove the laser scanner unit assy by pulling it forwards.

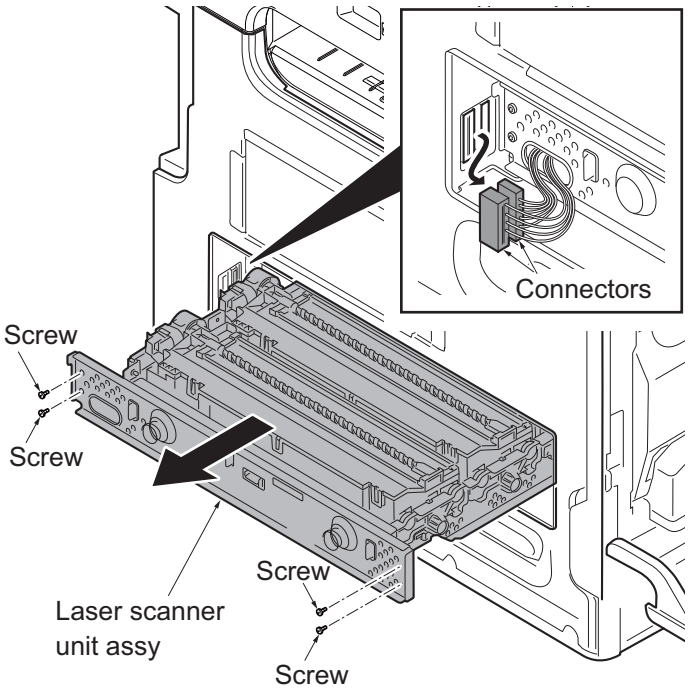

Figure 1-5-35

5. Release the clamp and then remove the FFC from the connector.
6. Remove two screws.
7. Remove the pin and spring and then remove the unit holder Y.
8. Lift the laser scanner unit Y upwards and then remove the laser scanner unit Y (LSU-Y).
9. Similarly, remove the laser scanner unit C/M/K(LSU-C/M/K).
10. Check or replace the laser scanner unit and refit all the removed parts.

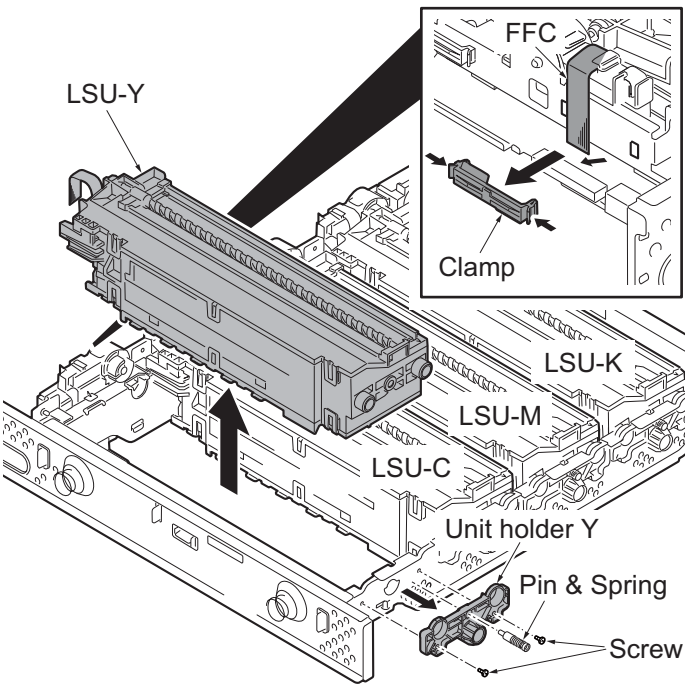

Figure 1-5-36

(2) Detaching and refitting the image scanner unit

Procedure

1. Remove the DP or original cover. (See page 1-5-25)
2. Remove two screws and then remove the scanner right cover.

   ATTENTION: To reinstall the scanner right cover, position it close to the platen.

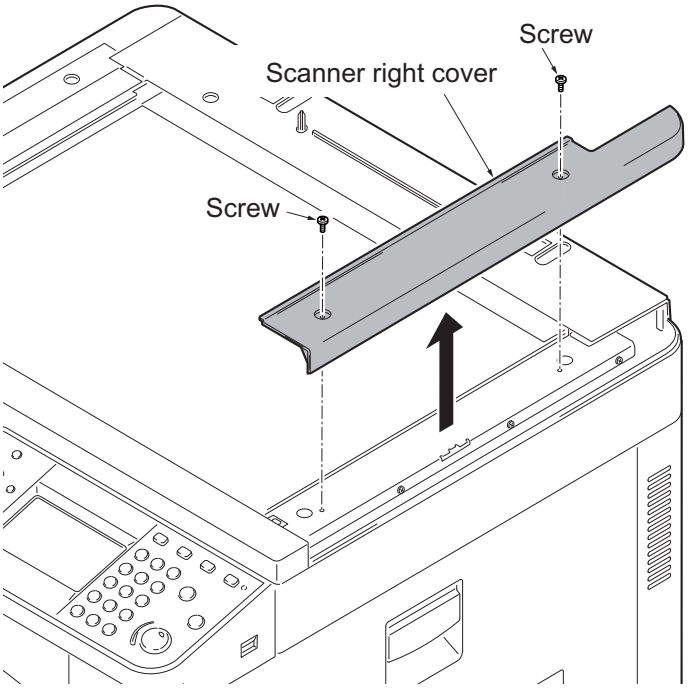

Figure 1-5-37

3. Remove the platen.

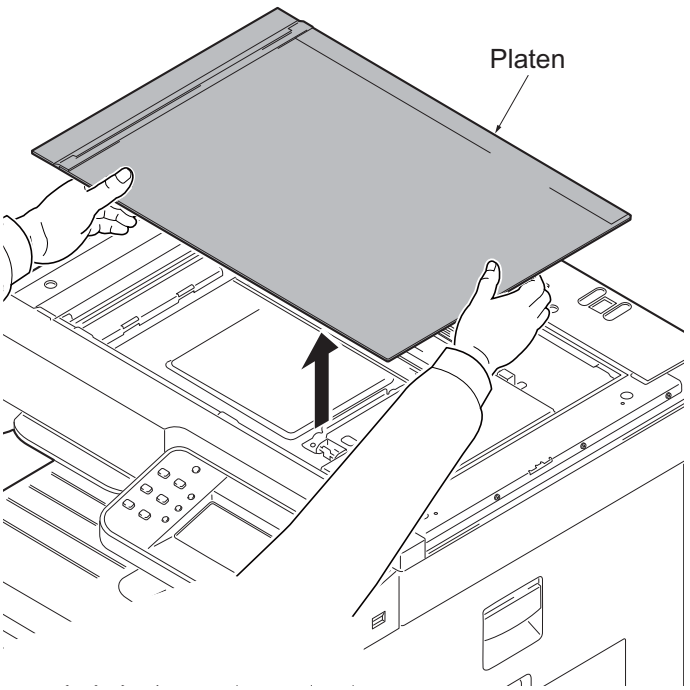

Figure 1-5-38

4. Remove four screws and then remove the scanner cover.

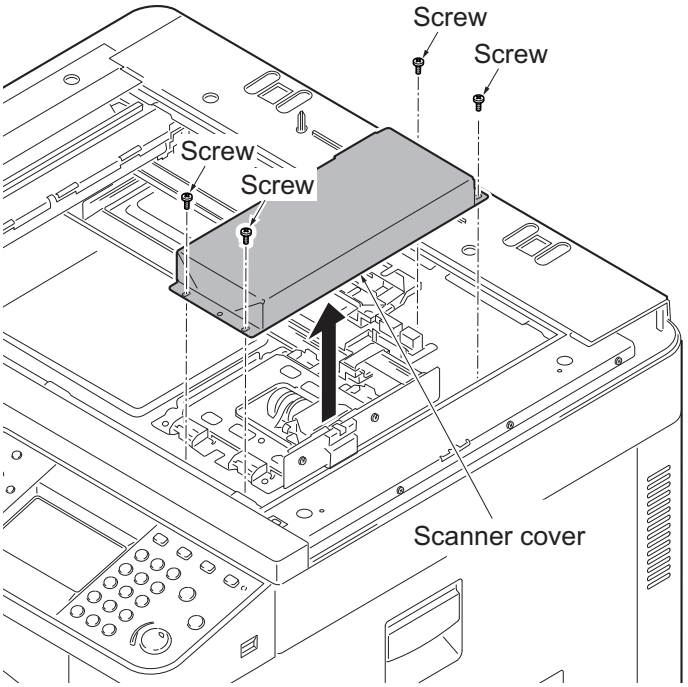

Figure 1-5-39

5. Remove the FFC from the connector.
6. Remove four screws and then remove the image scanner unit.
7. Check or replace the image scanner unit and refit all the removed parts.

   CAUTION: Fix the image scanner unit by matching to the scale of a former position.

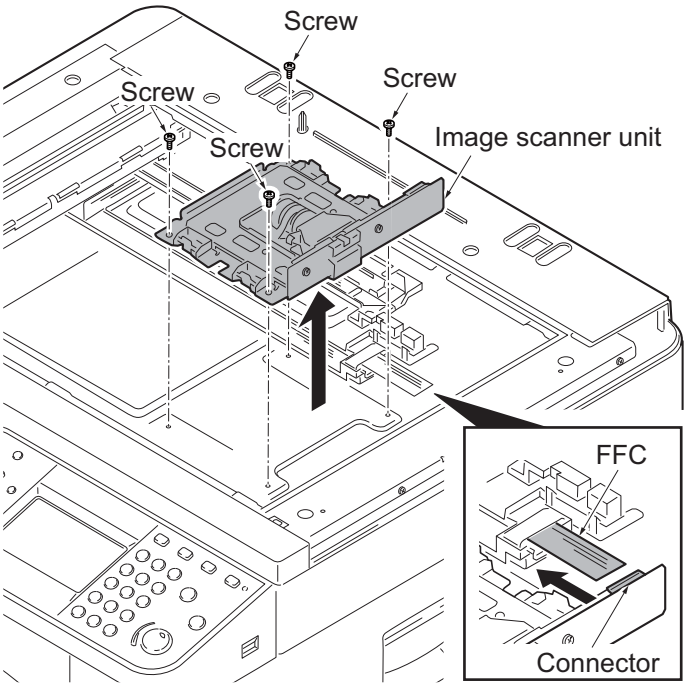

Figure 1-5-40

(3) Detaching and refitting the LED unit

Procedure

1. Remove the DP or original cover. (See page 1-5-25)
2. Remove the sanner right cover and platen.(See page 1-5-21)
3. Remove the ISU front cover.

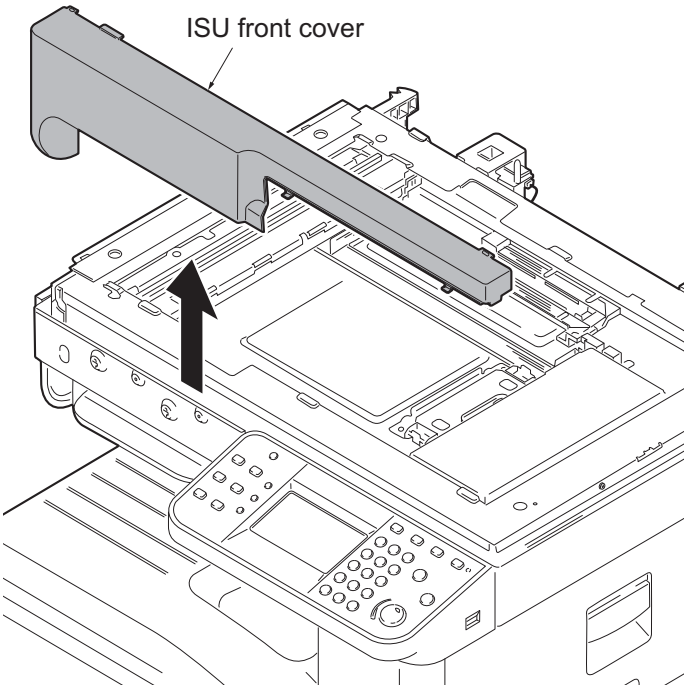

Figure 1-5-41

4. Remove two screws and then remove the ISU rear cover.

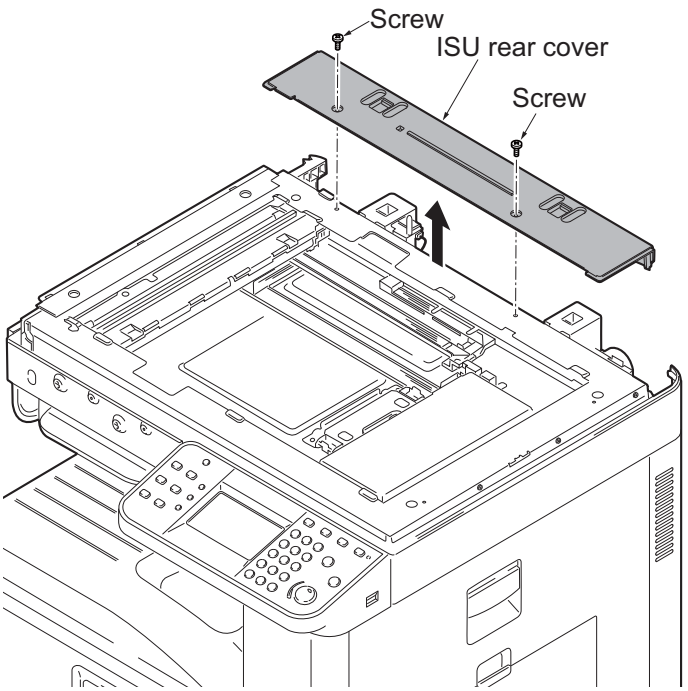

Figure 1-5-42

5. Move the exposure unit to the cutting lack part.
6. Peel off the sheet.
7. Release the hook and then remove the FFC cover.

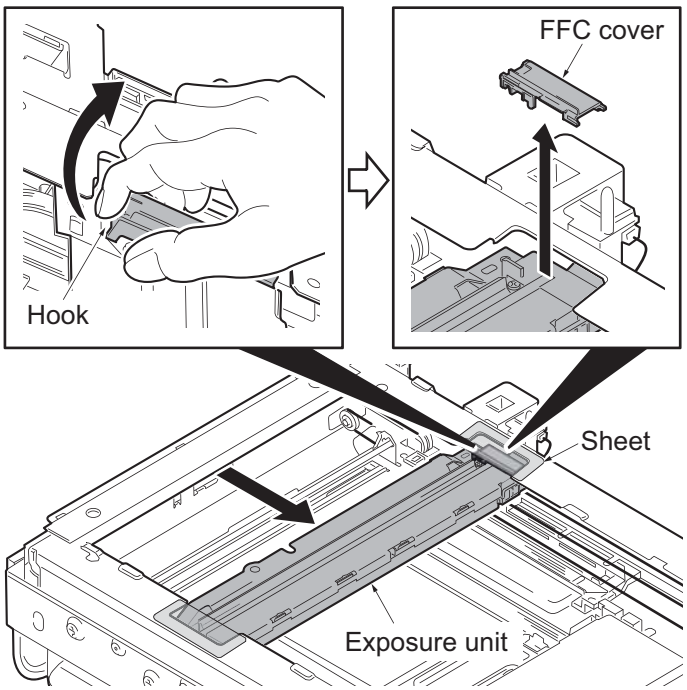

Figure 1-5-43

8. Remove the FFC from the connector.
9. Remove two screws and then remove the LED unit.
10. Check or replace the LED unit and refit all the removed parts.

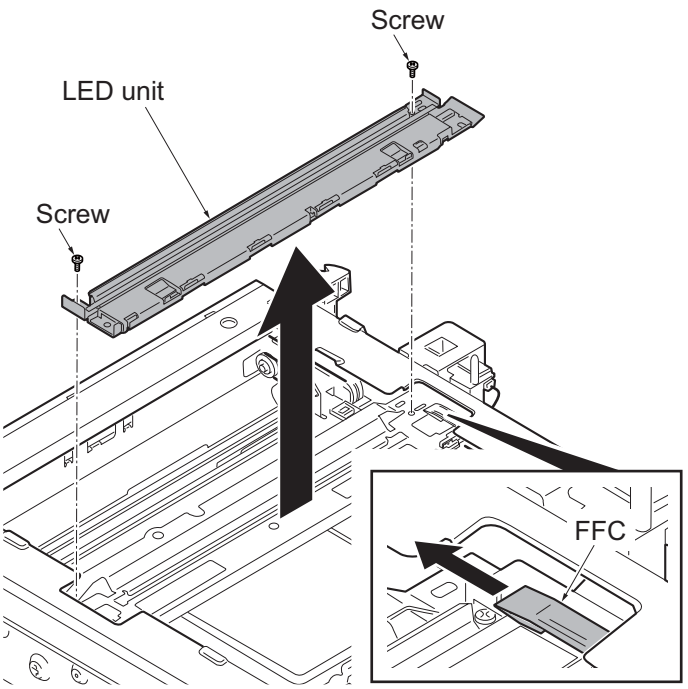

Figure 1-5-44

1-5-10 Document processor

(1) Detaching and refitting the document processor

Procedure

1. Remove the restriction parts.
2. Open the document processor on vertically.

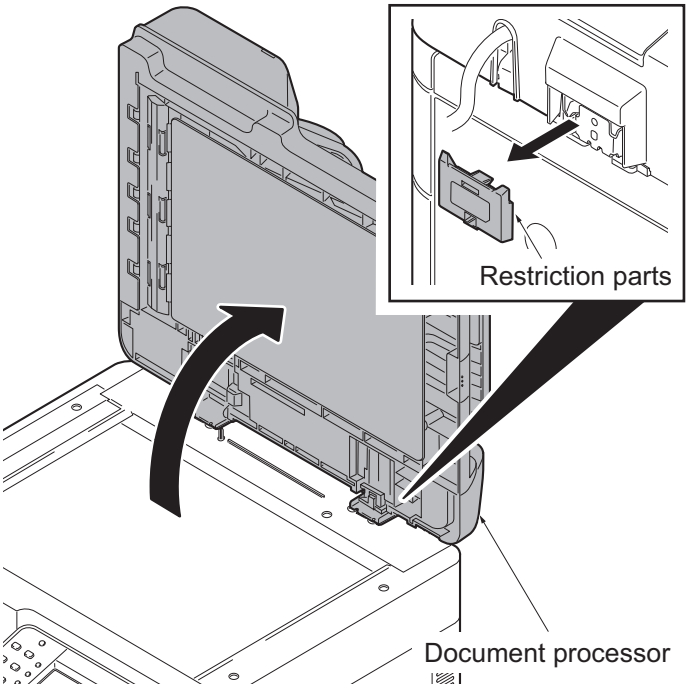

Figure 1-5-45

3. Remove two screws and then remove the DP interface connector.
4. Pull the document processor upwards out.

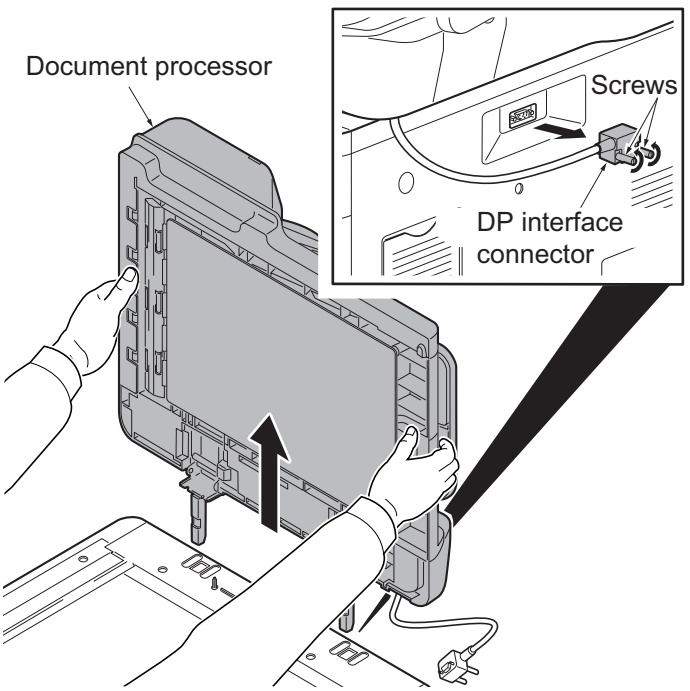

Figure 1-5-46

(2) Detaching and refitting the DP paper feed roller and DP separation pulley

Procedure

1. Open the DP top cover.

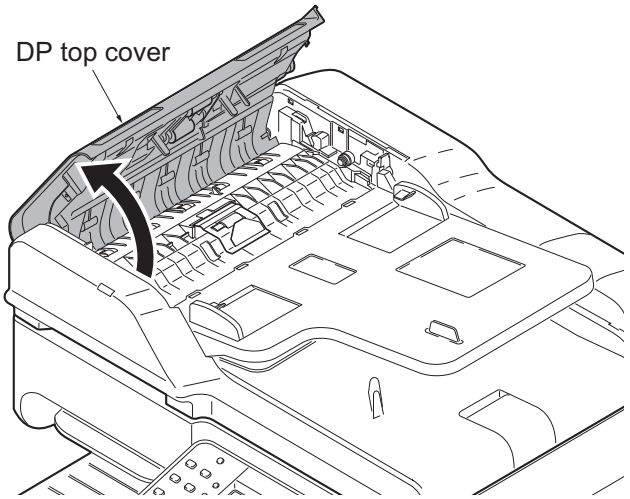

Figure 1-5-47

2. Pull the DP paper feed lever (yellow) down and then open it.
3. Knock the DP paper feed roller down forward.

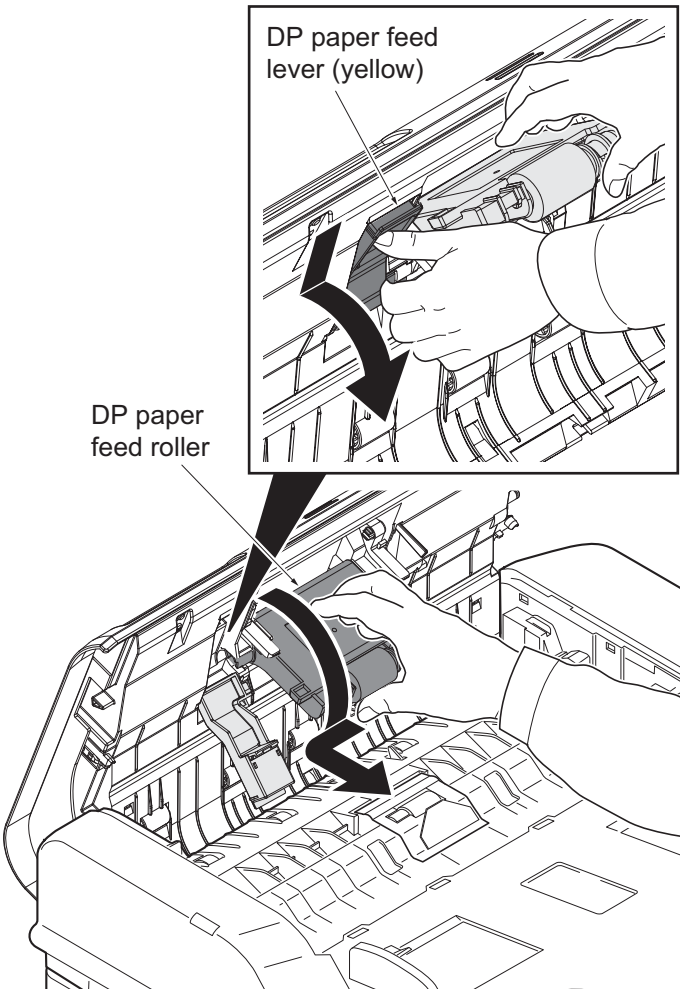

Figure 1-5-48

4. Release the hook and then remove DP separation pulley cover.

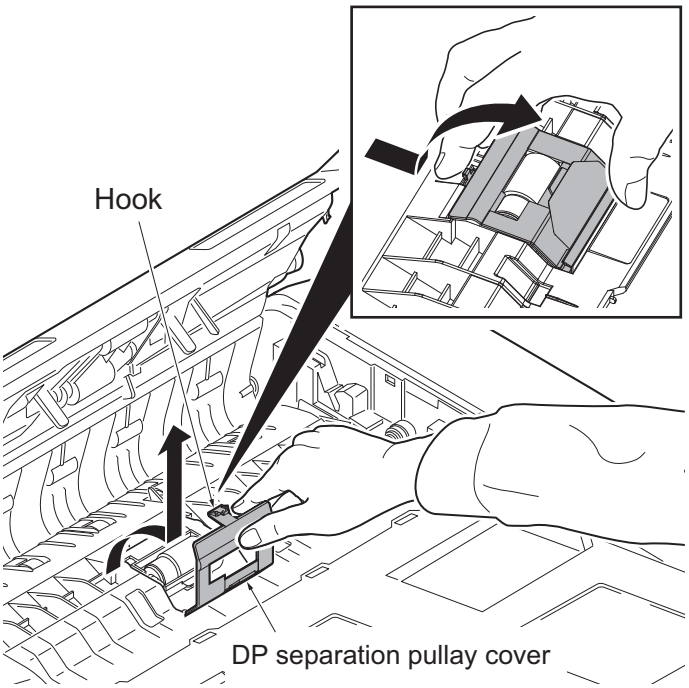

Figure 1-5-49

5. Raise the DP separation pulley and remove it by pulling upward.
6. Check or replace the DP paper feed roller and DP separation pulley and refit all the removed parts.

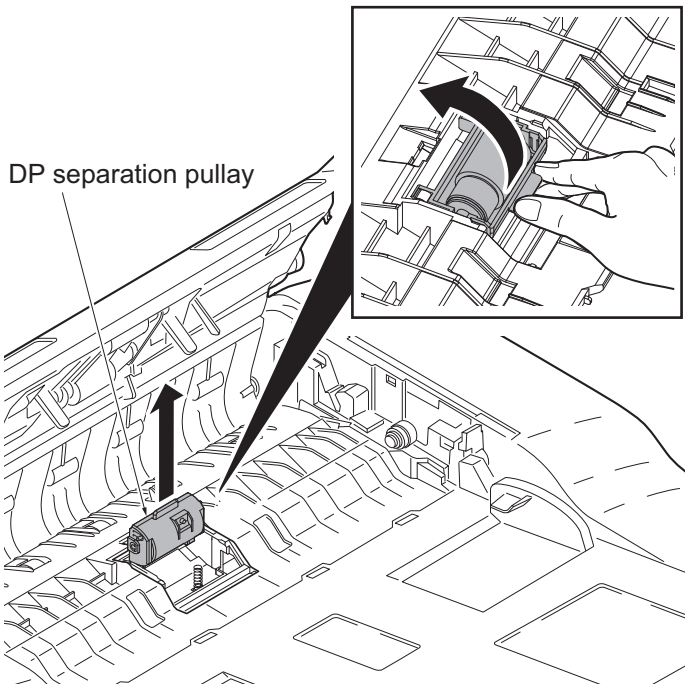

Figure 1-5-50

(3) Detaching and refitting the DP main PWB

Procedure

1. Open the document processor.
2. Release three hooks of the DP rear cover.

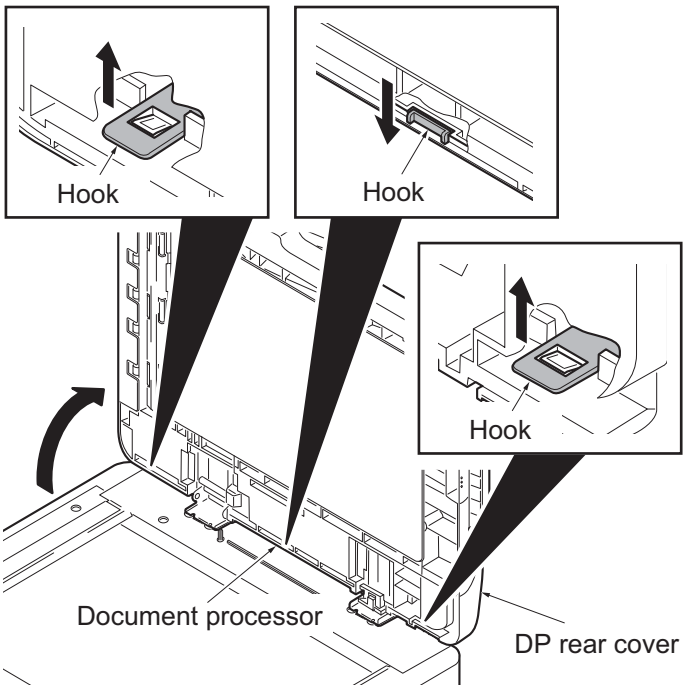

Figure 1-5-51

3. Release two hooks of the DP rear cover and then remove it.

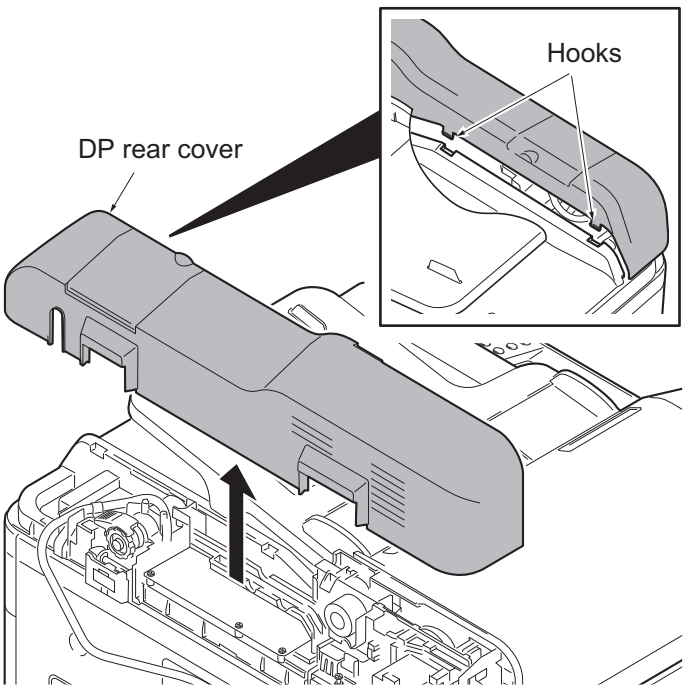

Figure 1-5-52

4. Remove all connectors from DP main PWB.
5. Remove five clamps and then remove the waires from holder.
6. Remove two screws and then remove the holder.

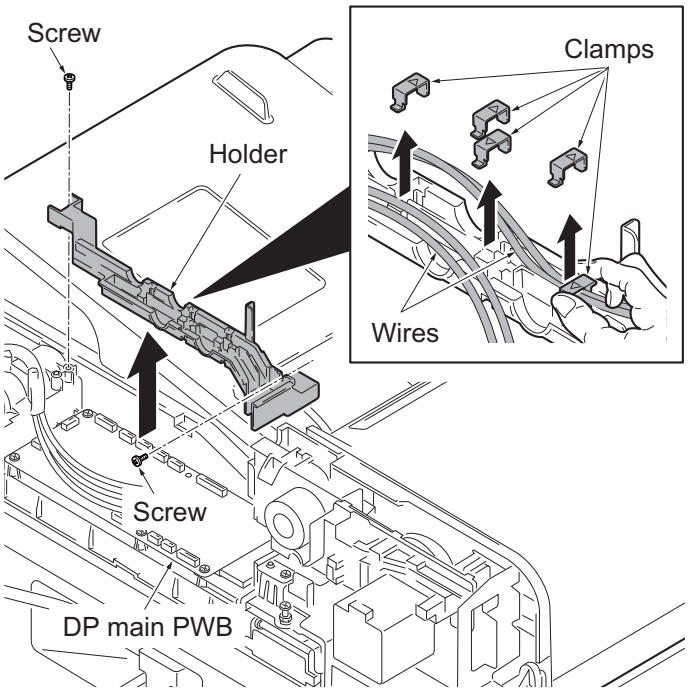

Figure 1-5-53

7. Remove six screws and then remove the DP main PWB.
8. Check or replace the DP main PWB and refit all the removed parts.

   CAUTION: When replacing the DP main PWB, remove the EEPROM from the DP main PWB that has been removed and then reattach it to the new DP main PWB.

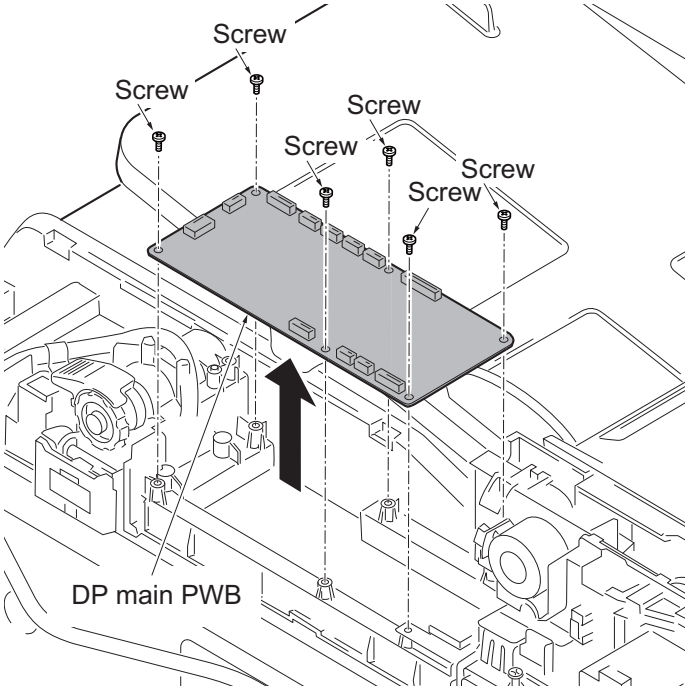

Figure 1-5-54

1-5-11 PWBs

(1) Detaching and refitting the main PWB

Procedure

1. Remove the rear cover.
   (See page 1-5-5)
2. Remove the left lower cover.
   (See page 1-5-6)
3. Remove the connector.
4. Remove the wire from the clamp.
5. Remove ten screws and then remove the controller box.

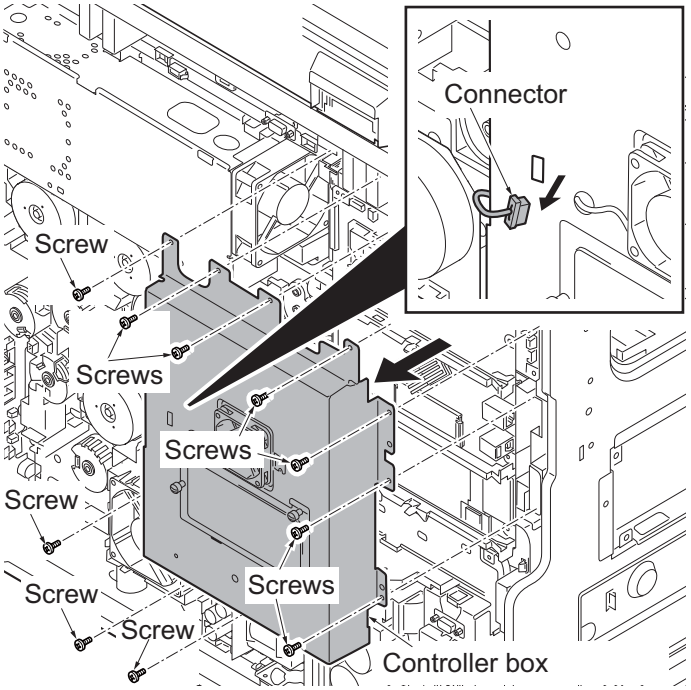

Figure 1-5-55

6. Remove all connectors and FFCs for the main PWB.
7. Remove eight screws and then remove the main PWB.
8. Check or replace the main PWB and refit all the removed parts.

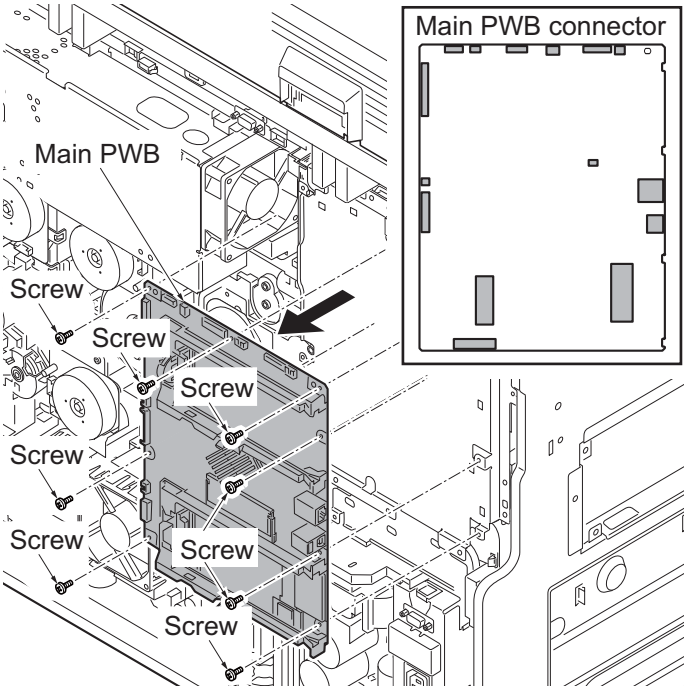

Figure 1-5-56

(2) Detaching and refitting the engine PWB

Procedure

1. Remove the rear cover.
   (See page 1-5-5)
2. Remove the main PWB.
   (See page 1-5-5)
3. Remove fourteen screws and then remove the mount board for main PWB.

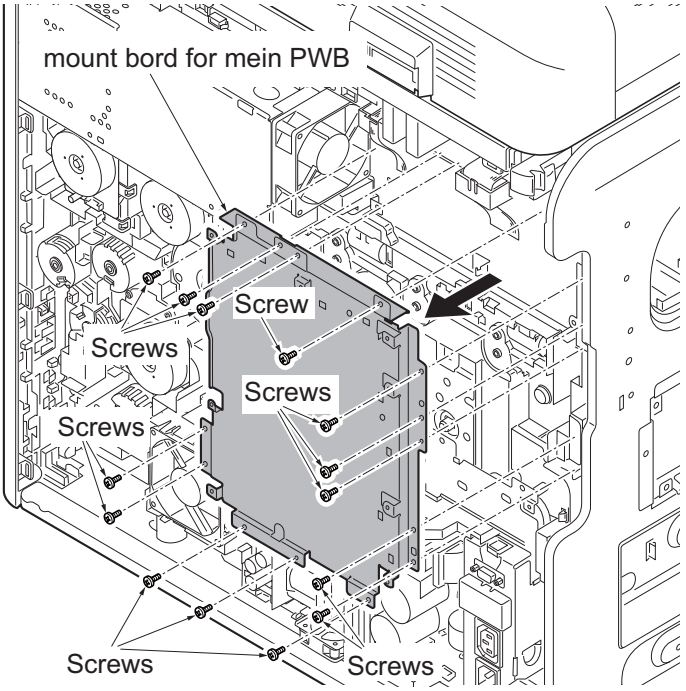

Figure 1-5-57

4. Remove all conectors from the engine PWB.
5. Remove four screws and then remove the engin PWB.
6. Check or replace the engine PWB and refit all the removed parts.

   CAUTION: When replacing the engine PWB, remove the EEPROM (U15) from the engine PWB that has been removed and then reattach it to the new engine PWB.

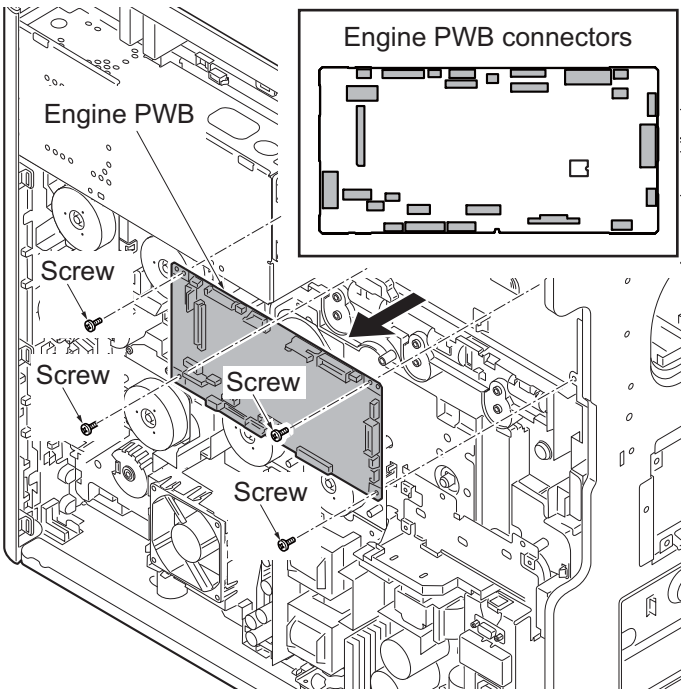

Figure 1-5-58

(3) Detaching and refitting the power source PWB

Procedure

1. Remove the rear cover and inner tray.(See page 1-5-5,1-5-6)
2. Remove the power source fan motor.(See page 1-5-20)
3. Remove all connecters from the power source PWB.
4. Remove four screws and then remove the power source PWB.
5. Check or replace the power source PWB and refit all the removed parts.

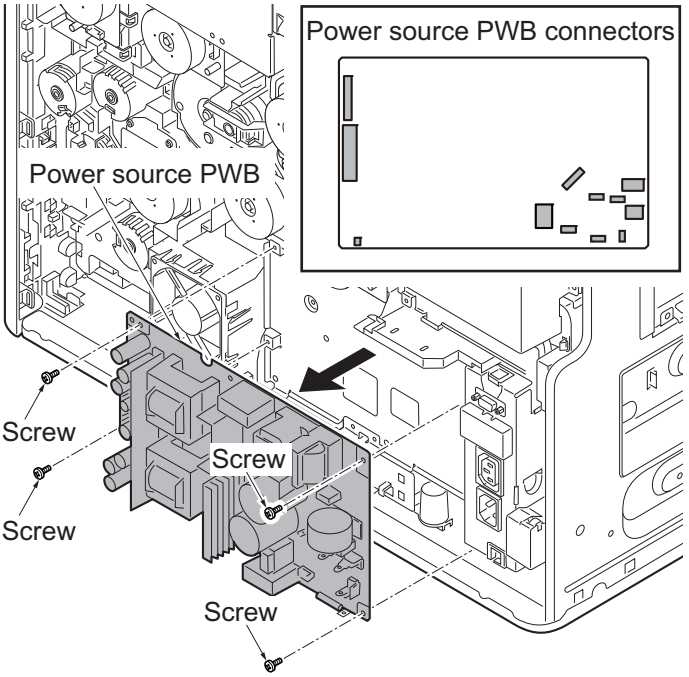

Figure 1-5-59

(4) Detaching and refitting the operation panel PWB main

Procedure

1. Remove the language sheets.
   (See page 1-5-36)
2. Remove two screws.

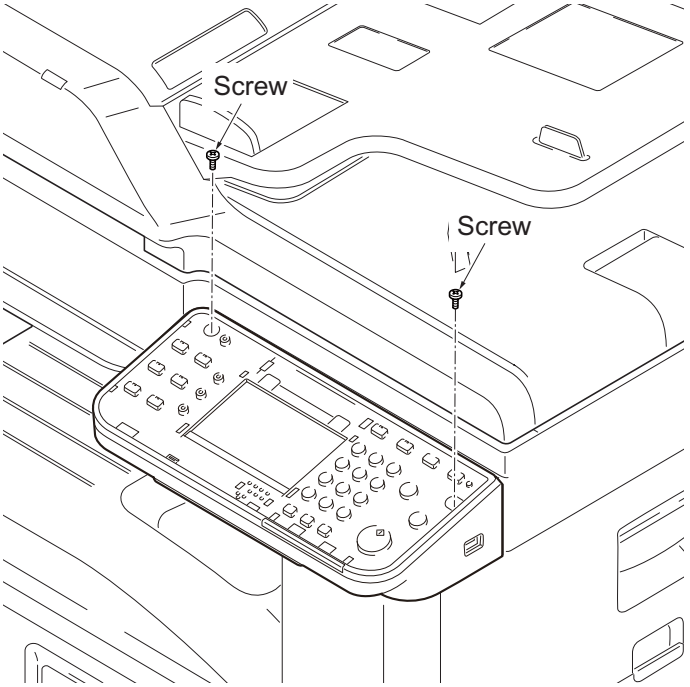

Figure 1-5-60

3. Remove three connectors from the operation panel PWB main.
4. Remove the operation panel upper unit.

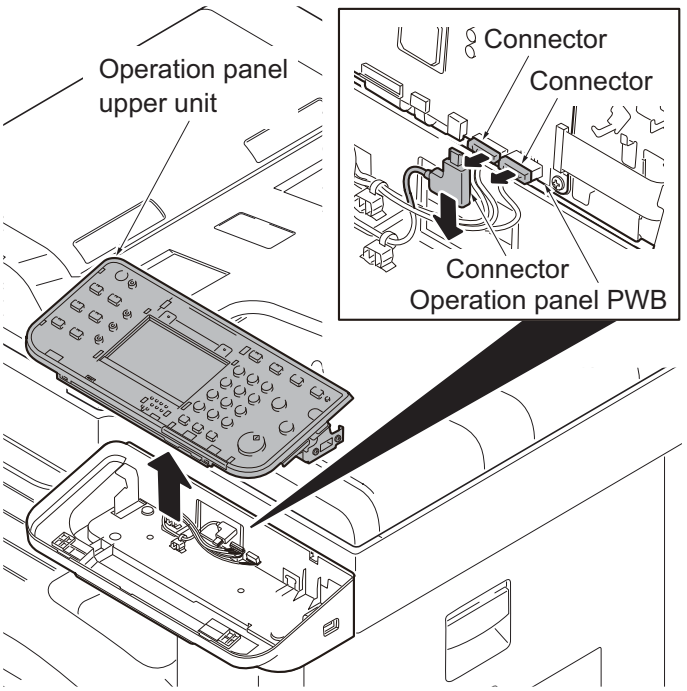

Figure 1-5-61

5. Remove four FFCs from the operatioon panel PWB main.
6. Remove four screws and then remove the operation panel PWB main.
7. Check or replace the operation panel PWB main and refit all the removed parts.

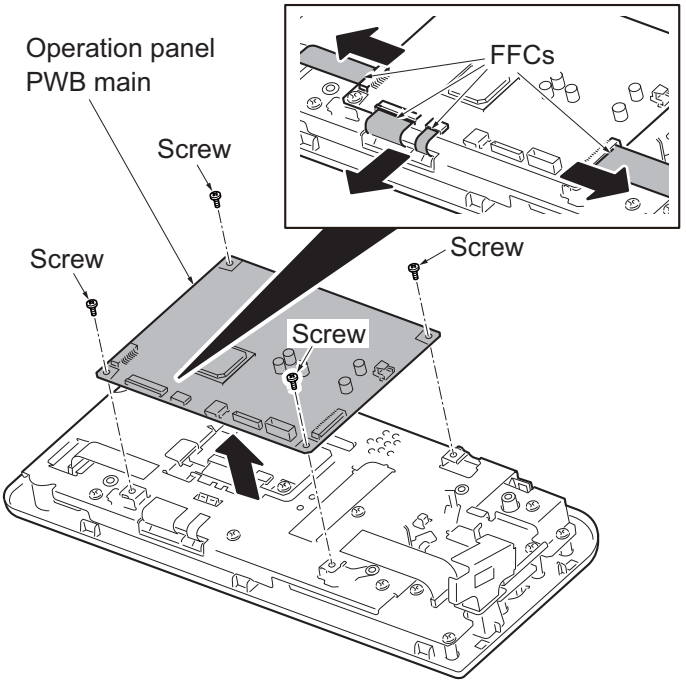

Figure 1-5-62

(5) Detaching and refitting the IH PWB

Procedure

1. Remove the scanner right cover. (See page 1-5-5)
2. Remove the right upper cover.
3. Remove the right rear cover.

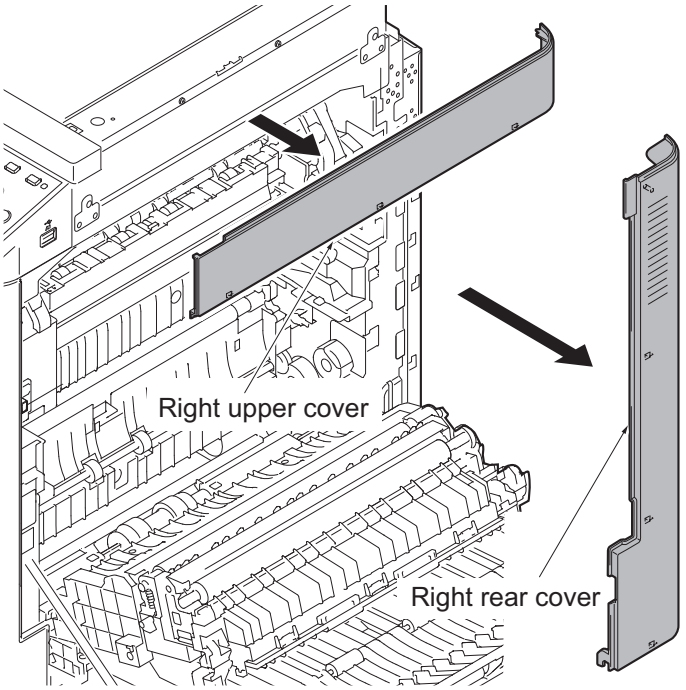

Figure 1-5-63

4. Remove two screws and then remove the IH box cover.
5. Remove all connectors from the IH PWB.
6. Remove six screws and then remove the IH PWB.
7. Check or replace the IH PWB and refit all the removed parts.

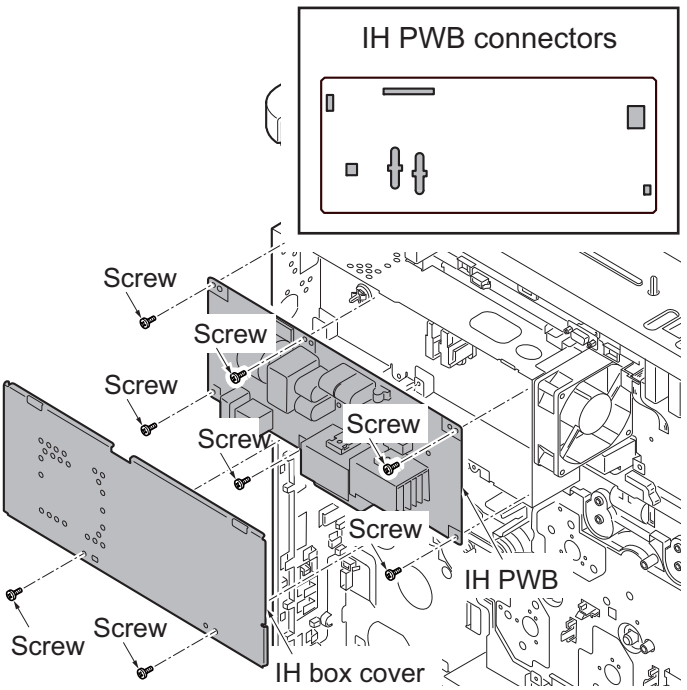

Figure 1-5-64

1-5-12 Others

(1) Detaching and refitting the language sheet

Procedure

1. Remove the upper cover by using a pen.
2. Remove the LCD cover.
3. Remove two operation panel covers
4. Remove two language sheets.
5. Check or replace the language sheet and refit all the removed parts.

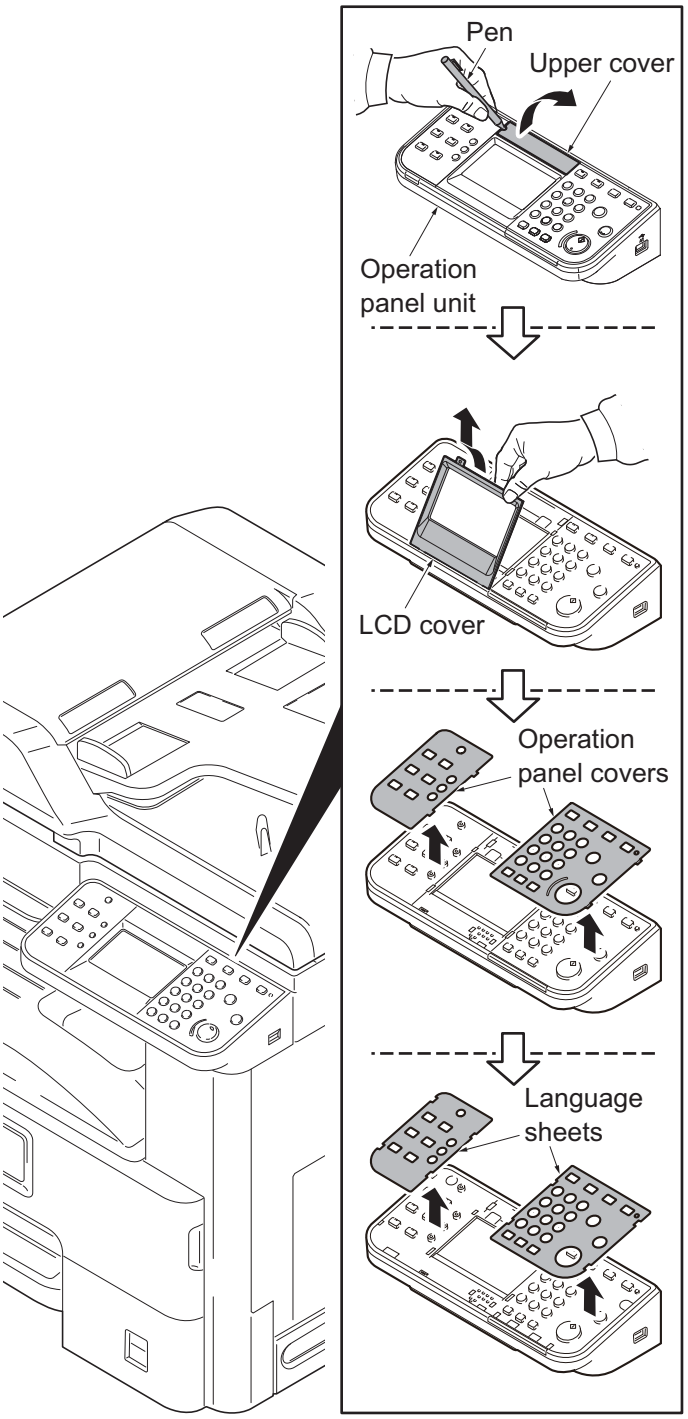

Figure 1-5-65

(2) Detaching and refitting the conveying unit

Procedure

1. Remove the MP tray.(See page 1-5-13)
2. Remove the right cover 1.
   (See page 1-5-11)

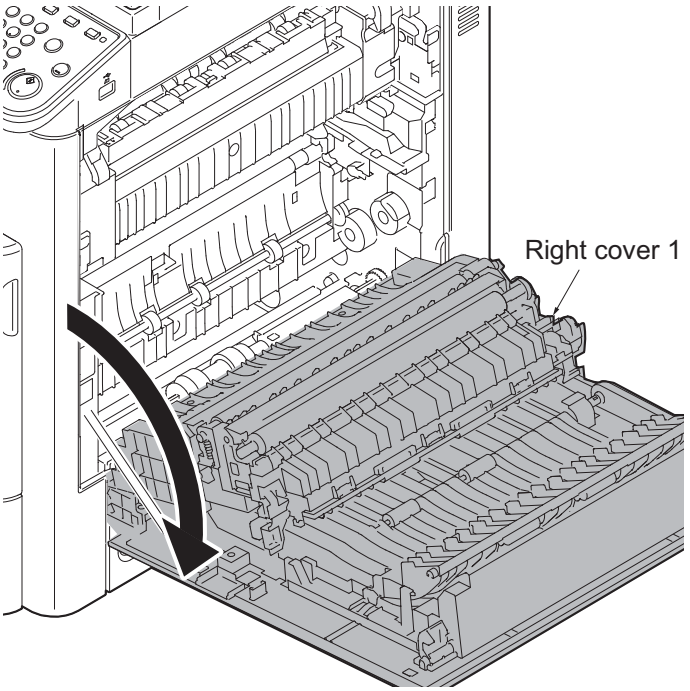

Figure 1-5-66

3. Remove two screws and then remove two straps.

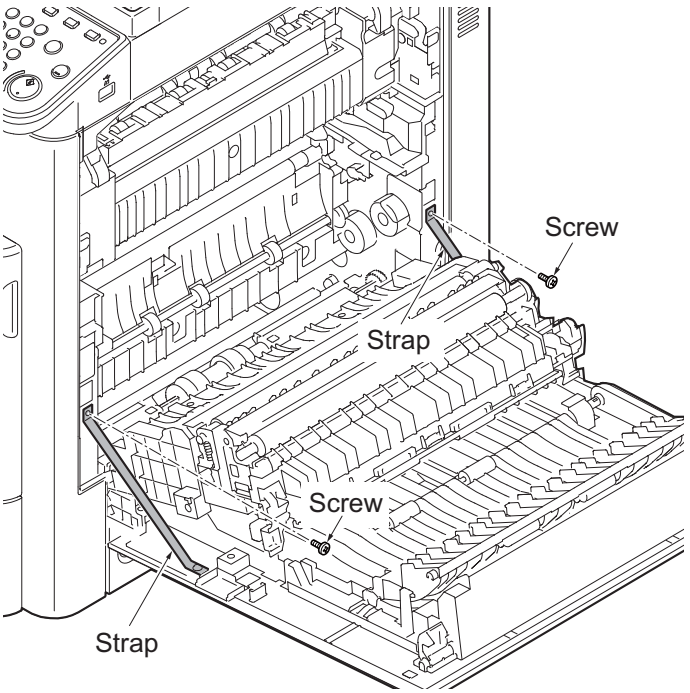

Figure 1-5-67

4. Remove the wire cover 2.
5. Rotate the wire cover 1.
6. Remove the connector.
7. Rotate the fulcrum axis and slide it forward.
8. Pull the right cover 1 backward and then remove it.

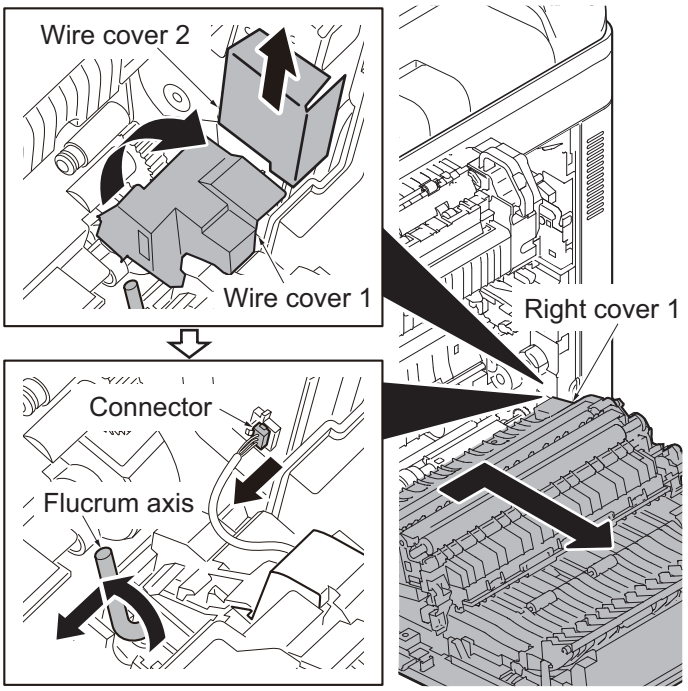

Figure 1-5-68

(3) Detaching and refitting the imaging fan motor

Procedure

1. Remove the rear cover.
   (See page 1-5-5)
2. Remove four clamps and then remove the wires and the connector.
3. Unhook four hooks and then remove the imaging fan motor.

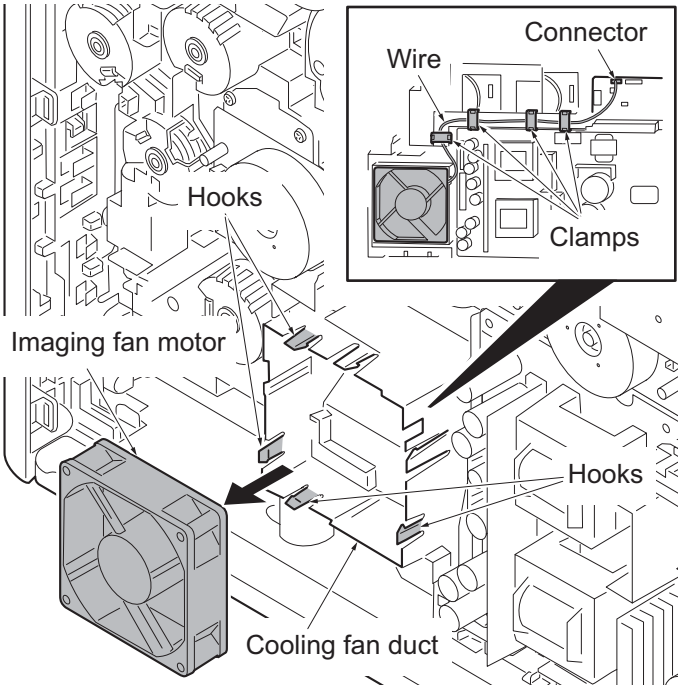

Figure 1-5-69

(4) Direction of installing the principal fan motors

When detaching or refitting the fan moter,be careful of the airflow direction (intake or exhaust).

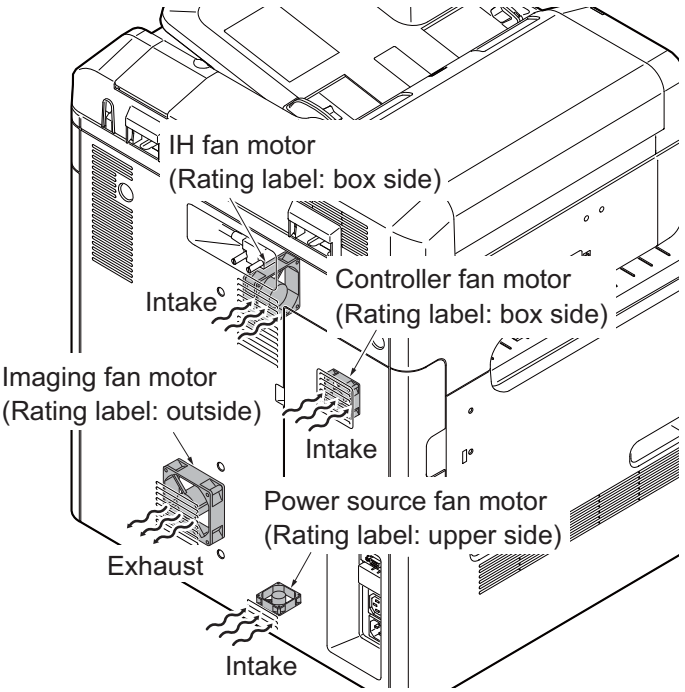

Figure 1-5-70

1-6-1 Upgrading the firmware

Follow the procedure to upgrade the firmware below.

* Main PWB (CTRL)
* DP main PWB (DP)
* PF main PWB (PF)
* DF main PWB (DF)
* Bridge PWB (AK)
* Engin fuser PWB (IH)
* Engine LSU PWB (LSU)
* Engine IO PWB (IO)
* Engine PWB (ENGN)
* FAX PWB (FAX)
* First color table (CLT1)
* Second color table (CLT2)
* Language data (OPT)
* Dictionary data (DIC)
* Operation panel PWB (PANL)

Preparation

Extract the file that has the download firmware and store them in a USB Memory.

NOTE: To improve Firmware Upgrade speed, a separate SKIP file can be added to the USB Memory Stick with the Firmware Upgrade package. The Skip file will allow ONLY the Firmware that has been Upgraded to a New Version to load, skipping duplicate Firmware Levels.

Procedure

1. Turn ON the main power switch and confirm if the screen shows “Ready to print” then, turn OFF the main power switch.
2. Insert USB memory that has the firmware in the USB memory slot.
3. Turn ON the main power switch.
4. About 50 seconds later, “Farmware Update” will be displayed (this shows that downloading is ready to start).
5. Select the firmware to upgrade by referring to the following codes:

   CTRL → DP → PF → DF → AK → IH → LSU → IO → ENGN → FAX → CLT1 → CLT2 → OPT → DIC → PANL

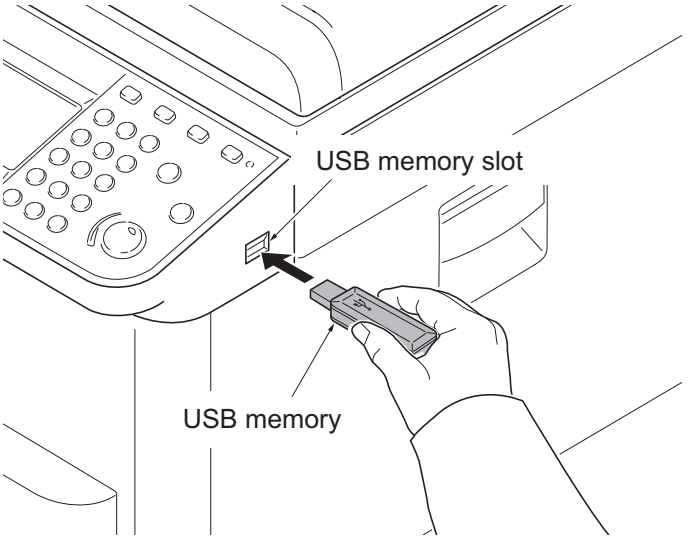

Figure 1-6-1

Example:

```
=================
  Firmware Update        First line:     Status of upgrading.
      CTRL               Second line:  Firm ware for upgrading.
      xxx%               Third line:     The progress of upgrading in %.
=================
```

6. Confirm that upgrading is completed.
7. Confirm that the version of the firmware is correctly displayed.
8. Turn OFF the main power switch and remove the USB memory.

1-6-2 Remarks on PWB replacement

NOTE: When replacing the PWB, remove the EEPROM from the PWB and then reattach it to the new PWB.

(1) Engine PWB

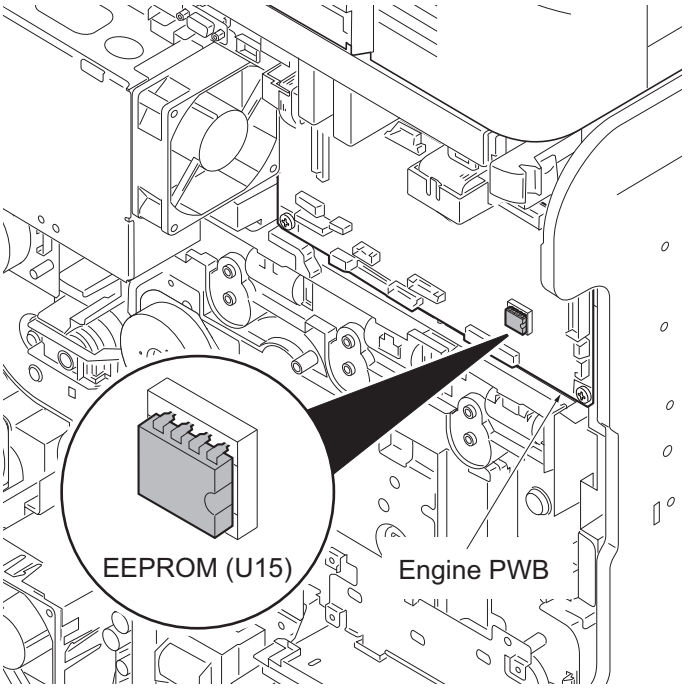

Figure 1-6-2

(2) DP main PWB

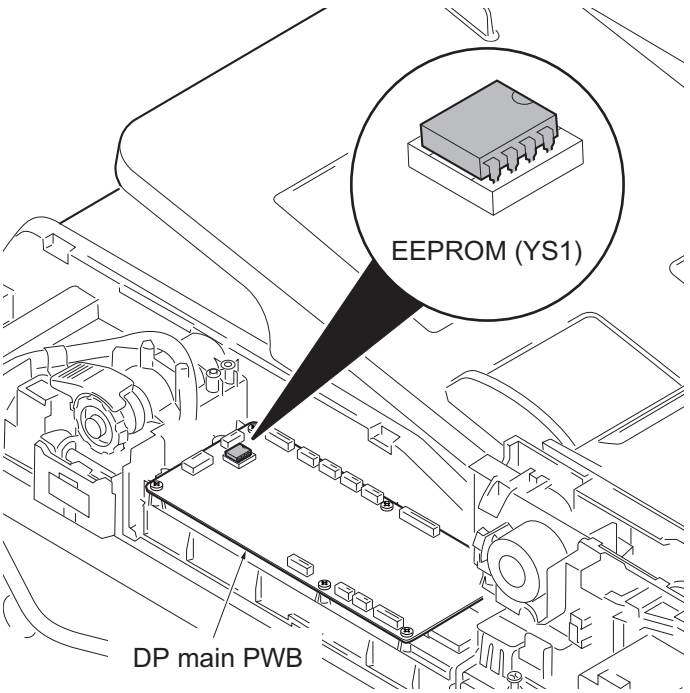

Figure 1-6-3

2-1-1 Paper feed/conveying section

The paper feed/conveying section consists of the paper feed unit that feeds paper from the cassette and the MP tray paper feed unit that feeds paper from the MP tray, and the paper conveying section that conveys the fed paper to the transfer/separation section.

(1) Cassette paper feed section

The cassette can contain 500 sheets. The sheet from the cassette is pulled out by rotation of the pickup roller and sent to the paper conveying section by rotation of the paper feed roller. Also the retard roller prevents multiple feeding of paper.

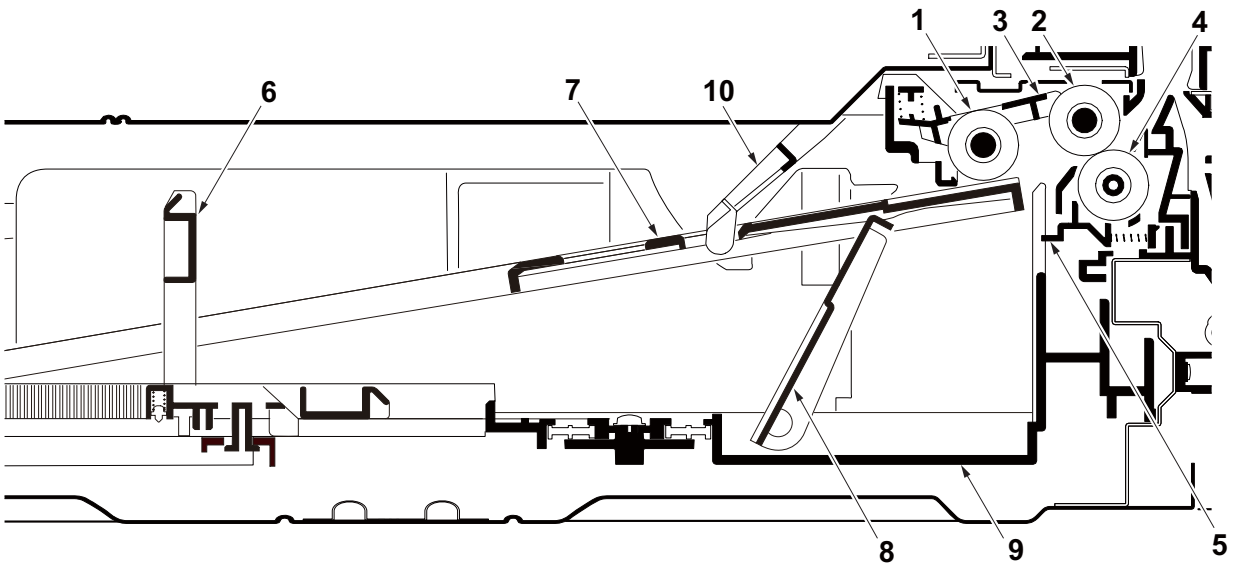

Figure 2-1-1 Cassette paper feed section

1. Pickup roller
2. Paper feed roller
3. Feed holder
4. Retard roller
5. Retard holder
6. Paper length guide
7. Bottom plate
8. Lift work plate
9. Cassette base
10. Actuator (paper sensor)

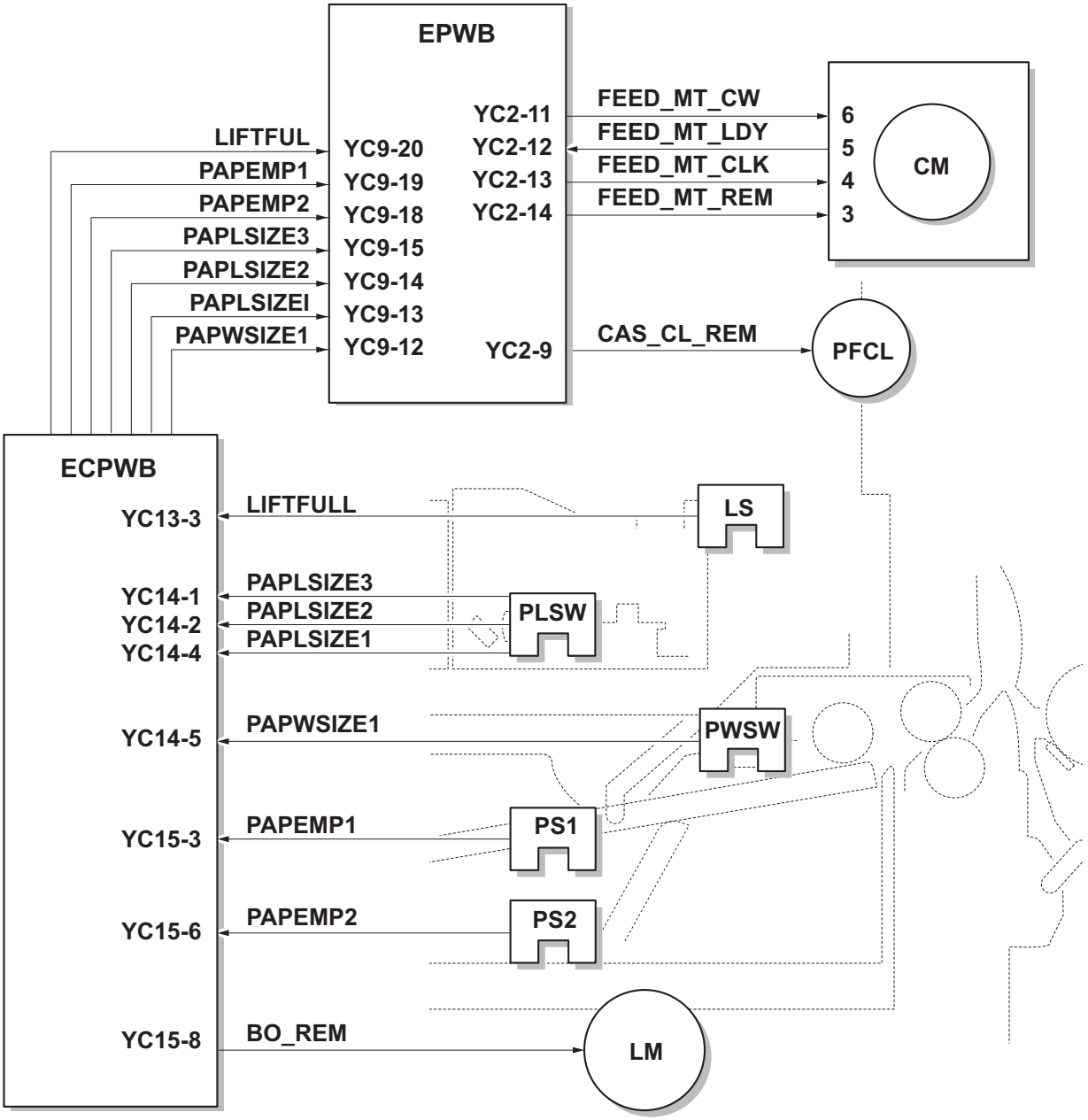

Figure 2-1-2 Cassette paper feed section block diagram

(2) MP tray paper feed section

The MP tray can contain 100 sheets. Feeding from the MP tray is performed by the rotation of the MP paper feed roller. Also, function of the MP separation pad prevents paper from multiple feeding.

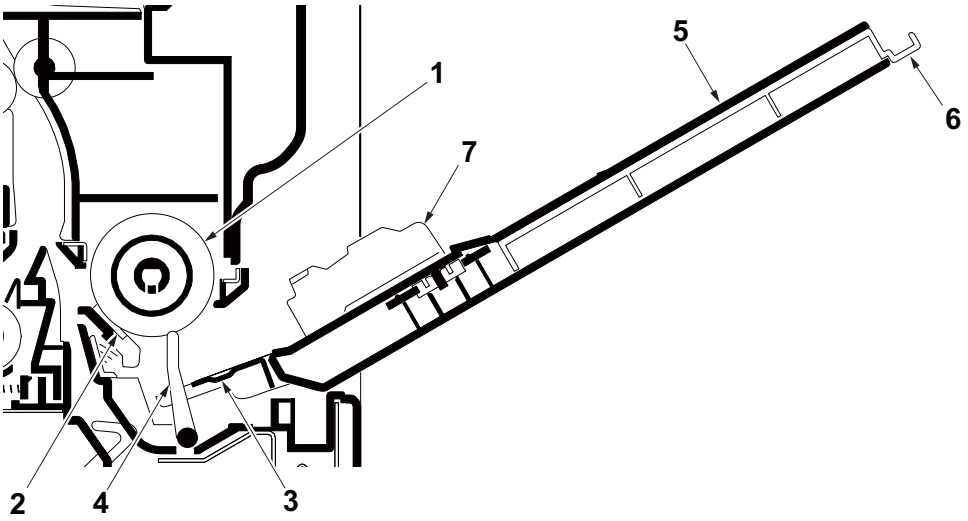

Figure 2-1-3 MP tray paper feed section

1. MP paper feed roller
2. MP separation pad
3. MP bottom plate
4. Actuator(MP paper feed sensor)
5. MP (multi purpose)tray
6. MP tray extension
7. MP paper width guide

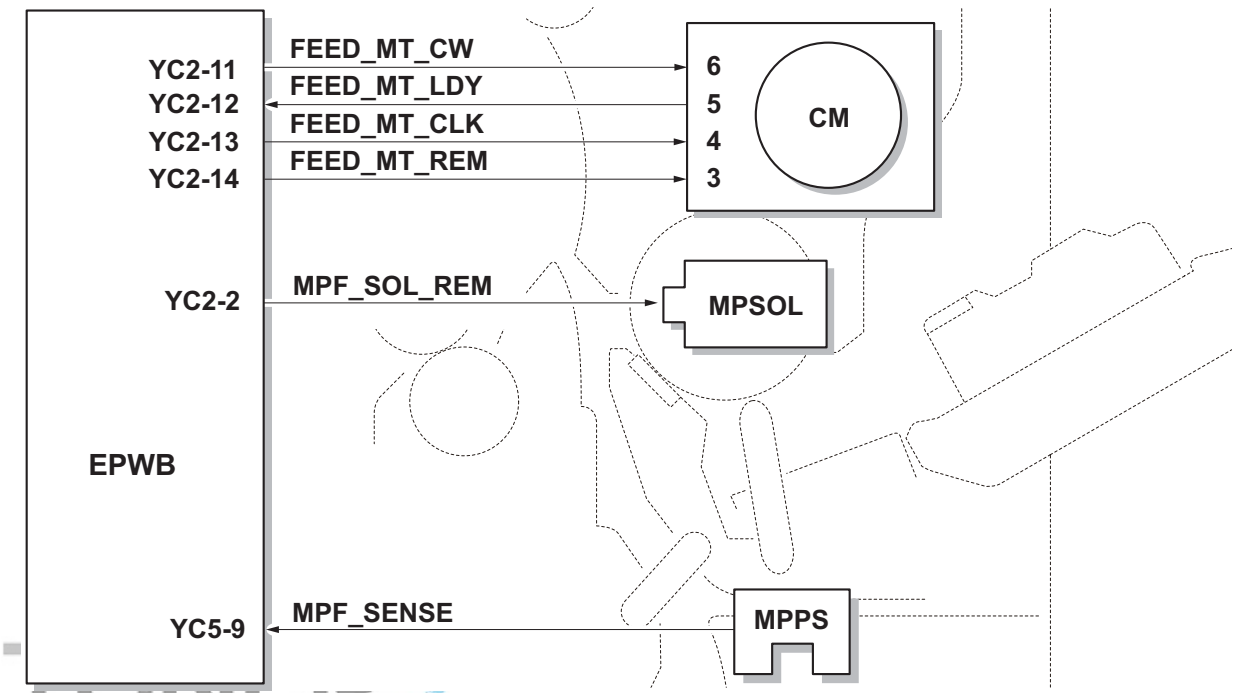

Figure 2-1-4 MP tray paper feed section block diagram

(3) Conveying section

The conveying section conveys paper to the transfer/separation section as paper feeding from the cassette or MP tray, or as paper refeeding for duplex printing. Paper by feeding is conveyed by the paper feed roller to the position where the registration sensor (RS) is turned on, and then sent to the transfer/separation section by the right registration roller and left registration roller.

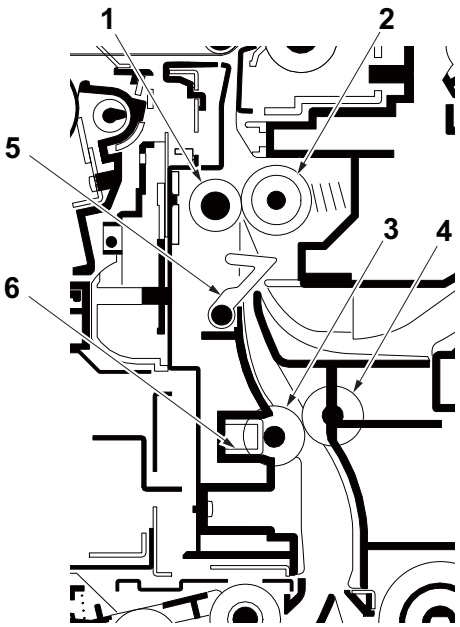

Figure 2-1-5 Conveying section

1. Left registration roller
2. Right registration roller
3. Left feed roller
4. Right feed roller
5. Actuator (registration sensor)
6. Registration cleaner

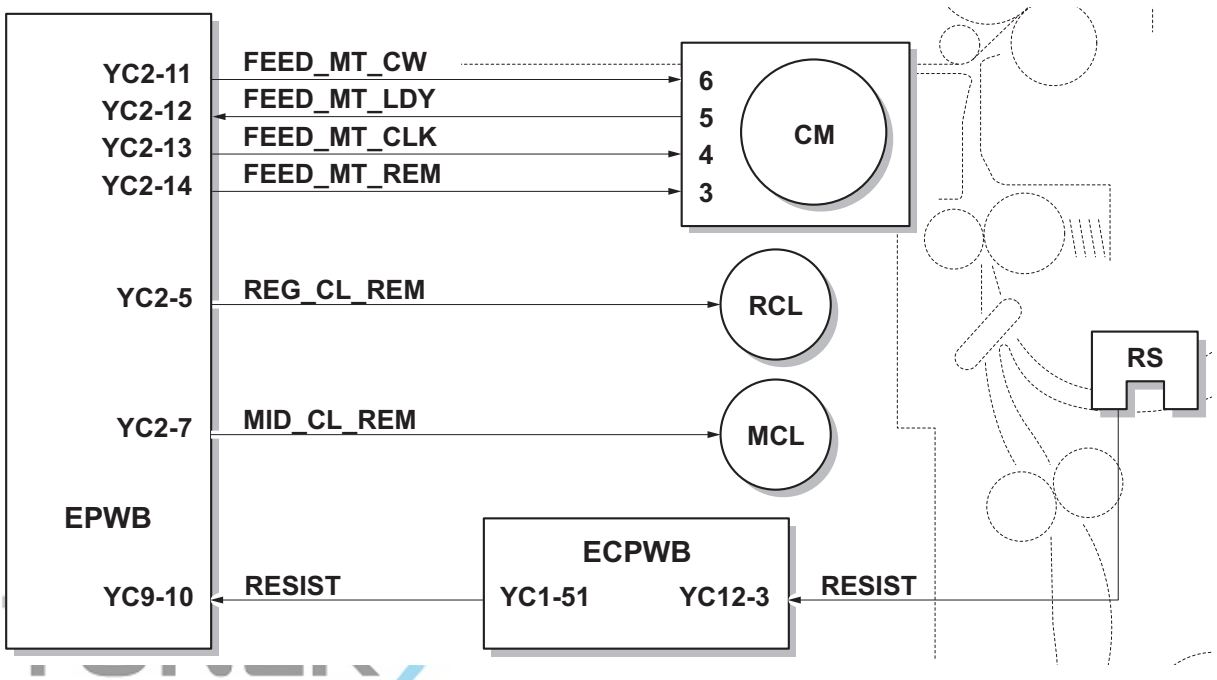

Figure 2-1-6 Paper conveying section block diagram

2-1-2 Drum section

The drum section consists of the drum, the charger roller unit, and the cleaning unit, and the drum surface is uniformly charged in preparation for formation of residual image by laser beam.
After transfer is complete, toner remaining on the drum surface is chipped off with the cleaning blade and is collected to the waste toner box with the sweep roller. The cleaning lamp (CL) consists of LEDs and removes residual charge on the drum before main charging.

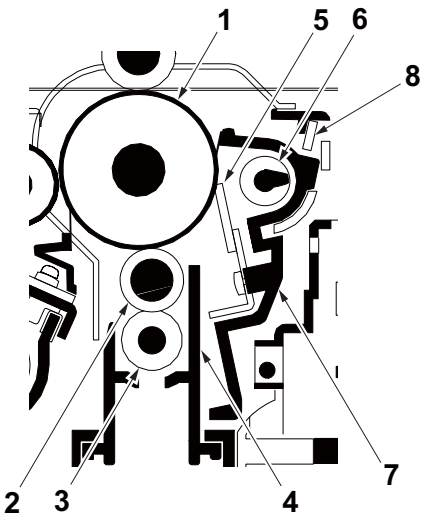

Figure 2-1-7 Drum section

1. Drum
2. Charger roller
3. Charger cleaning roller
4. Charger case
5. Cleaning blade
6. Sweep roller
7. Drum frame
8. Cleaning lamp (CL)

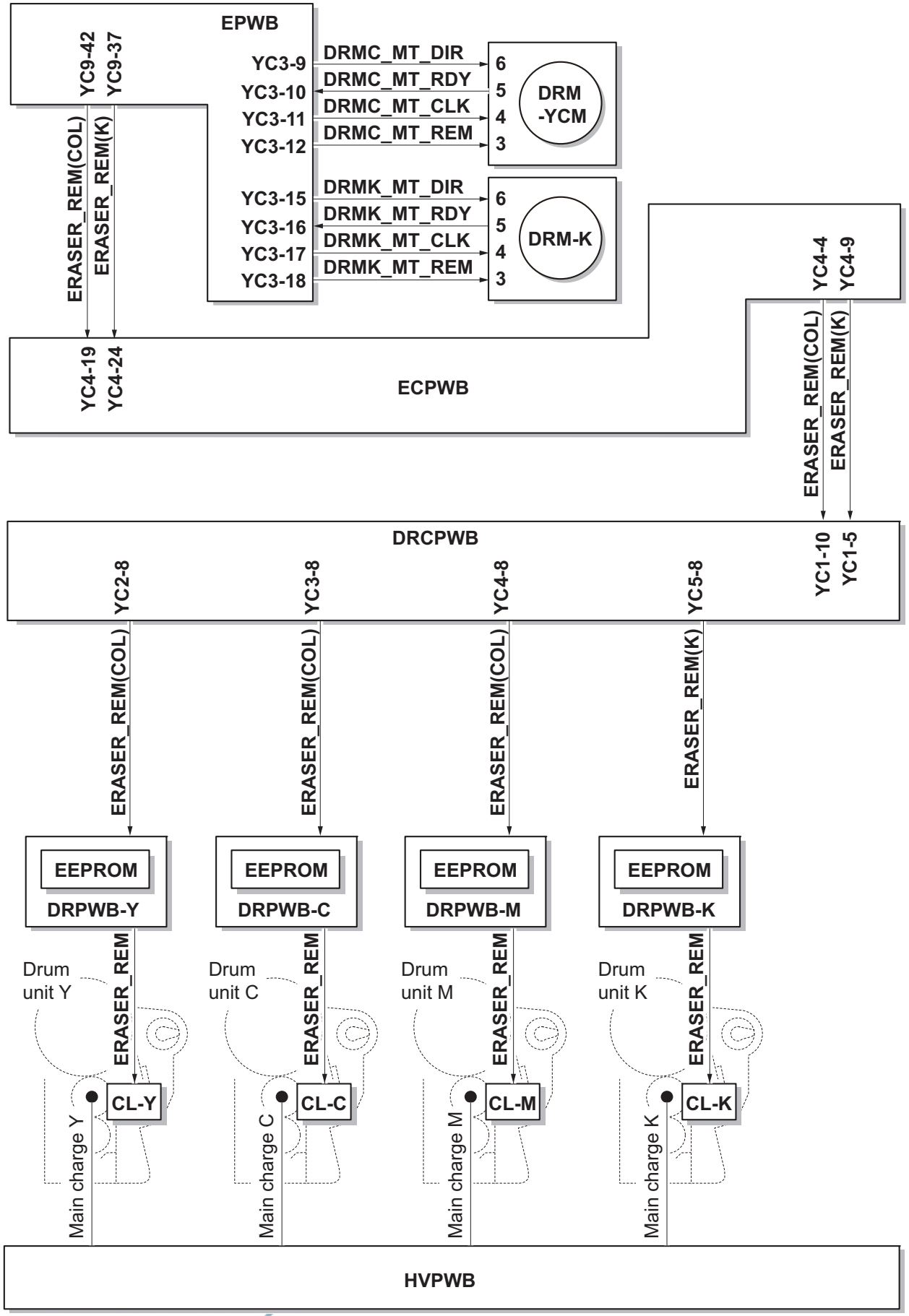

Figure 2-1-8 Drum section block diagram

2-1-3 Developing section

The developing unit consists of the sleeve roller that forms the magnetic brush, the magnet roller, the developing blade and the developing screws that agitate the toner.Also, the toner sensor (TS) checks whether or not toner remains in the developing unit.

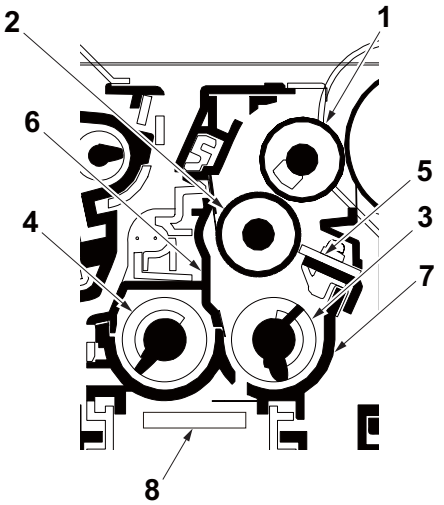

Figure 2-1-9 Developing section

1. Sleeve roller
2. Magnet roller
3. Developing screw A
4. Developing screw B
5. Developing blade
6. Developer case
7. Developer base
8. Toner sennsor (TS)

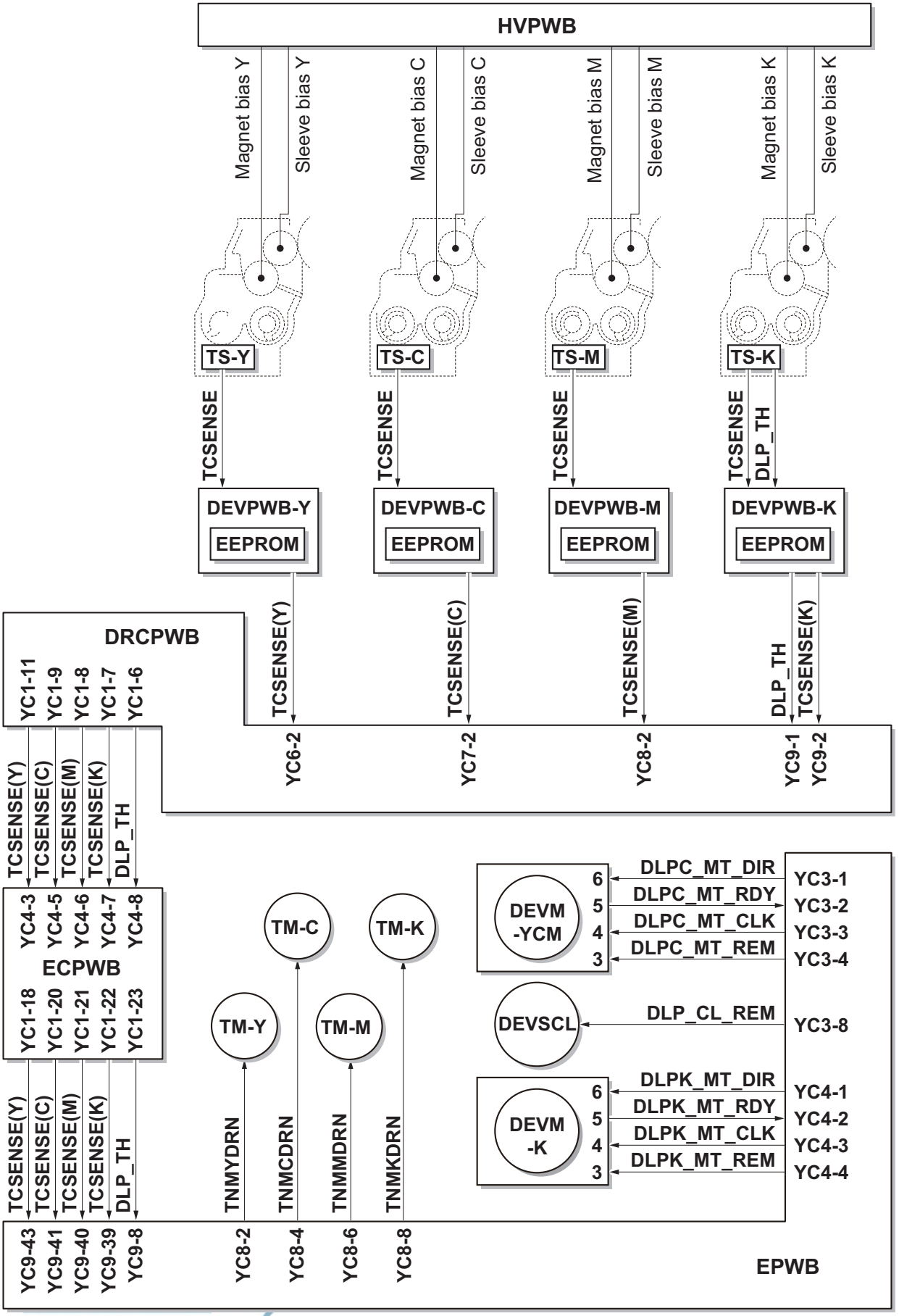

Figure 2-1-10 Developing section block diagram

2-1-4 Optical section

The optical section consists of the image scanner section for scanning and the laser scanner section for printing.

(1) Image scanner section

The original image is illuminated by the exposure lamp (EL) and scanned by the CCD image sensor in the CCD PWB (CCDPWB) via the three mirrors and ISU lens, the reflected light being converted to an electrical signal.
If a document processor is used, the image scanner unit stops at the position of the DP contact glass and scans sequentially one row of the image on the original in synchronization with the moving timing of the original in the sub scan direction by driving the DP.

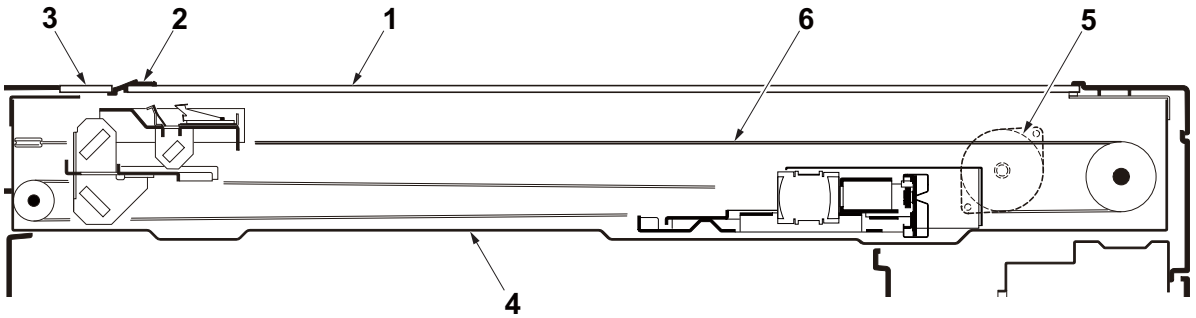

Figure 2-1-11 Scanner unit

1. Platen
2. Original size indicator plate
3. DP contact glass
4. ISU frame
5. ISU motor (ISUM)
6. ISU wire

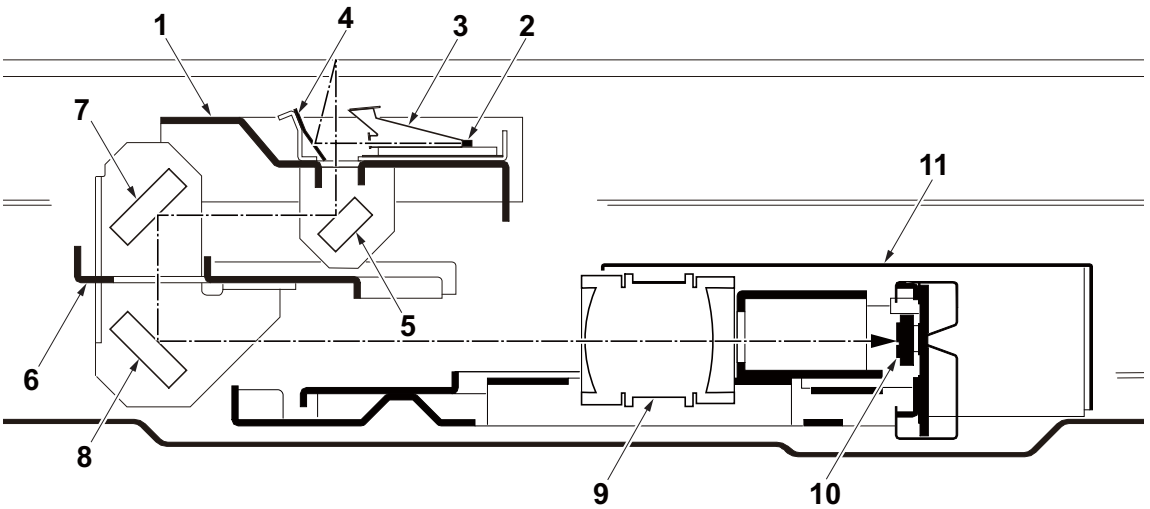

Figure 2-1-12 Image scanner unit (ISU)

1. The first mirror frame
2. Exposure lamp (EL)
3. Exposure lens
4. Reflector
5. Mirror A
6. The second mirror frame
7. Mirror B
8. Mirror C
9. ISU lens
10. CCD PWB (CCDPWB)
11. Scanner cover

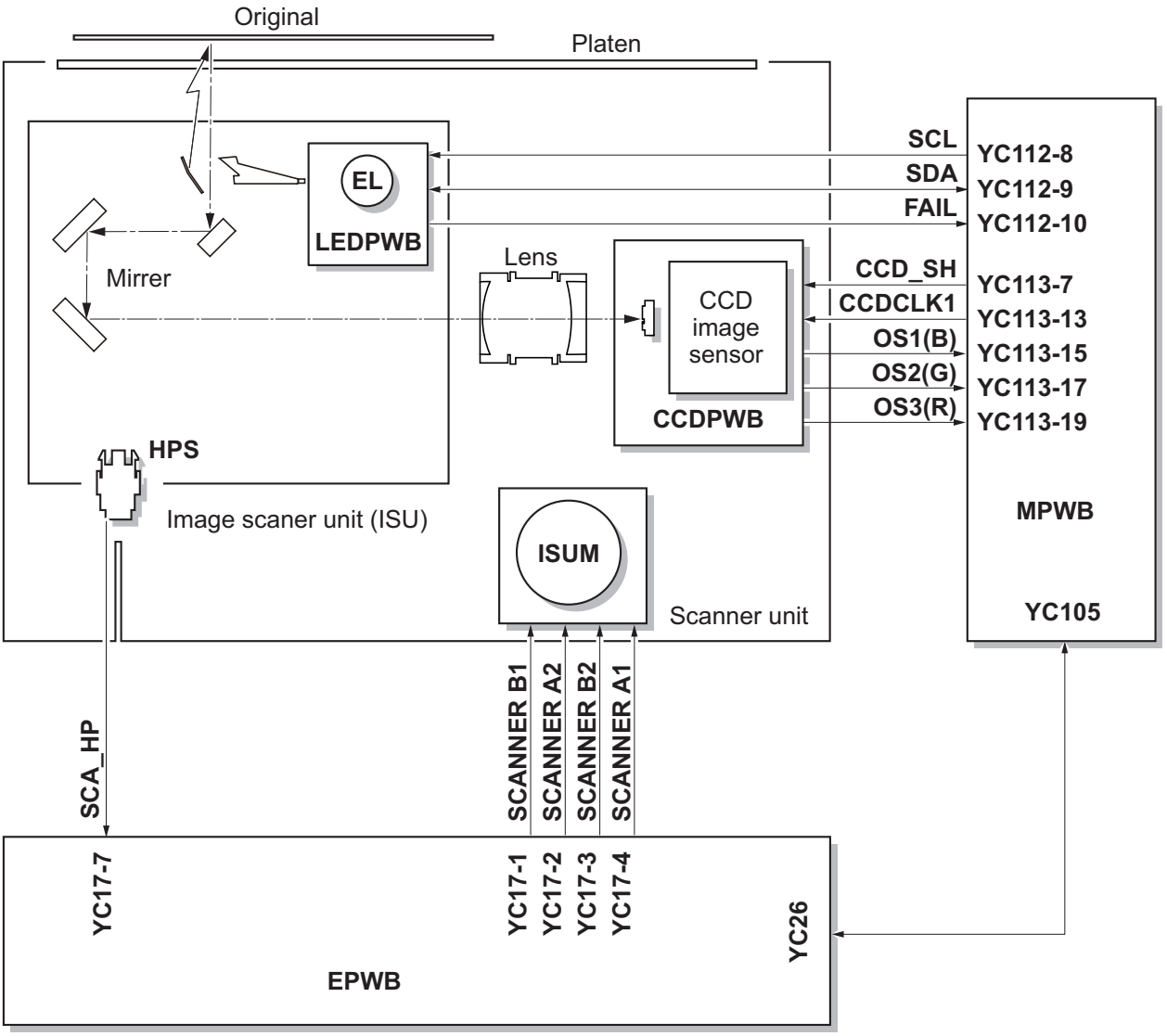

Figure 2-1-13 Scanner unit block diagram

(2) Laser scanner section

The charged surface of the drum is then scanned by the laser beam from the laser scanner unit. The laser beam is dispersed as the polygon motor (PM) revolves to reflect the laser beam over the drum. Various lenses and mirror are housed in the laser scanner unit, adjust the diameter of the laser beam, and focalize it at the drum surface. Also the LSU cleaning motor (LSUCM) is activated to conduct automatically cleaning of the LSU dust shield glass.

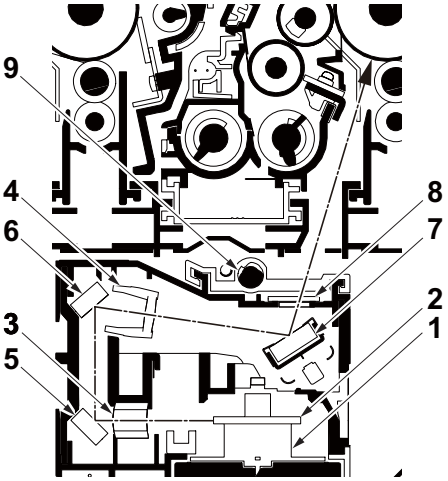

Figure 2-1-14 Laser scanner unit (LSU)

1. Polygon motor (PM)
2. Porygon mirrer
3. fθ lens A
4. fθ lens B
5. Mirrer A
6. Mirrer B
7. Mirrer C
8. LSU dust shield glass
9. LSU cleaning spiral

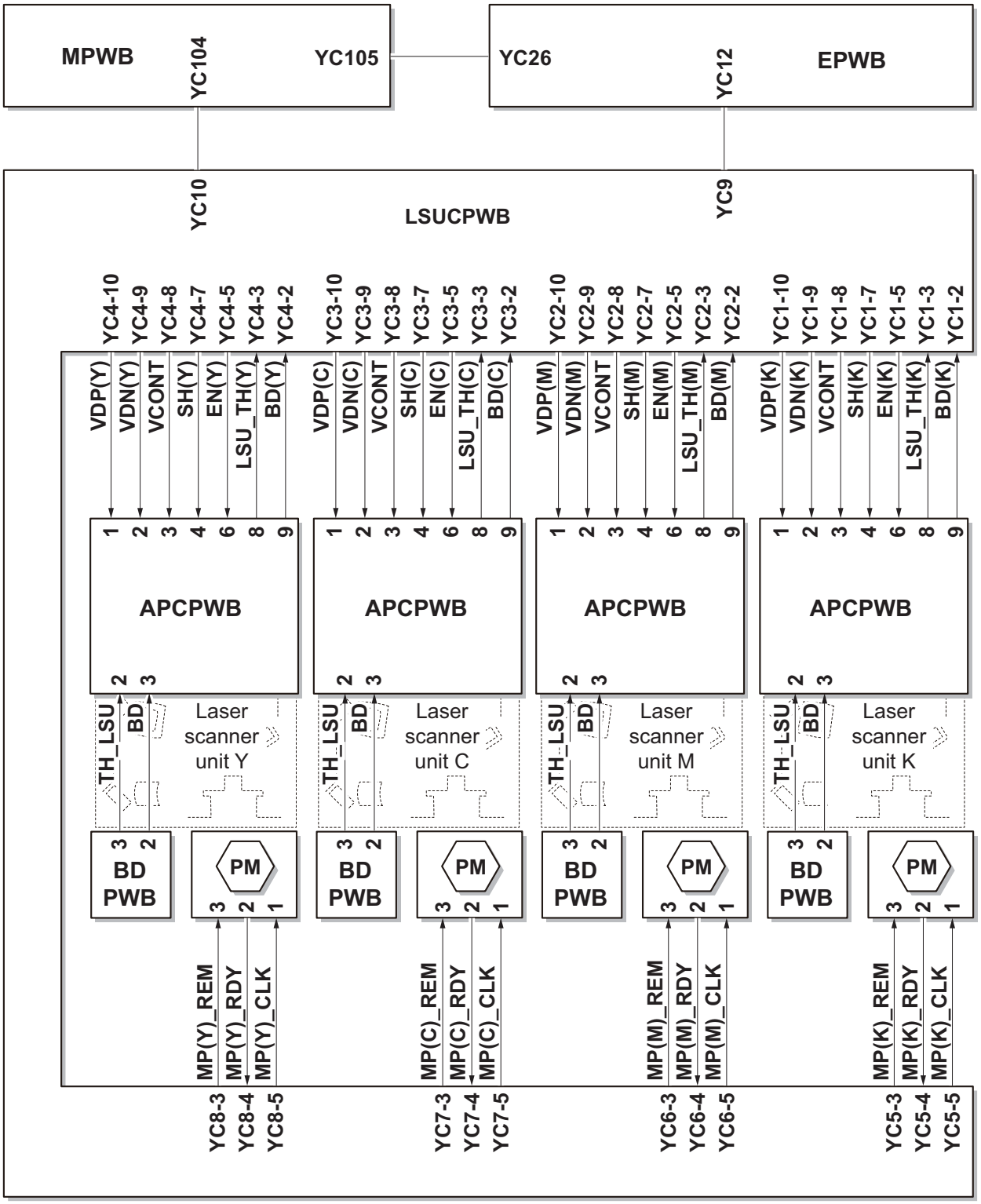

Figure 2-1-15 Laser scanner unit block diagram

2-1-5 Transfer/Separation section

The transfer/separation section consists of the intermediate transfer unit section and the secondary transfer roller section.

(1) Intermediate transfer unit section

The intermediate transfer unit section consists of the transfer cleaning unit, the transfer belt, and the four primary transfer rollers for respective color drums, and forms a full-color toner image by superimposing and transferring single-color toner images formed on each drum onto the transfer belt. Also with the ID sensors (IDS) mounted on the machine frame, the toner density on the transfer belt is measured.
The transfer cleaning unit collects toner remaining on the transfer belt after secondary transfer and forwards it as waste toner to the waste toner box.

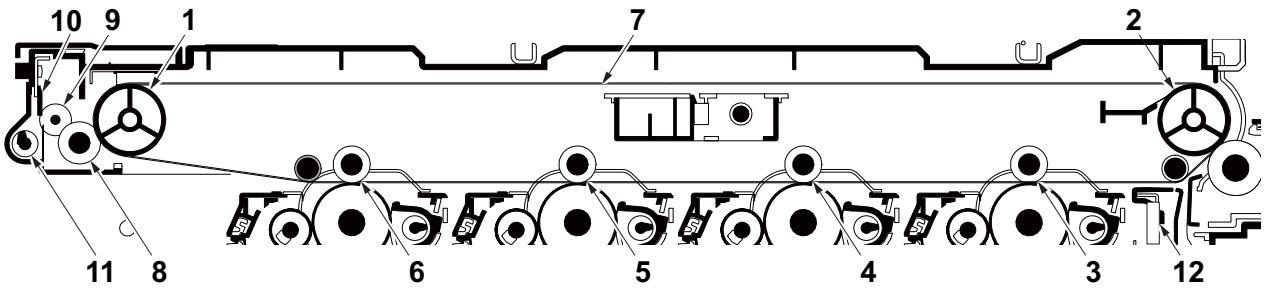

Figure 2-1-16 Inter mediate transfer unit section

1. Tension roller
2. Drive roller
3. Primary transfer roller K
4. Primary transfer roller M
5. Primary transfer roller C
6. Primary transfer roller Y
7. Transfer belt
8. Cleaning fur brush
9. Cleaning roller
10. Cleaning blade
11. Cleaning screw
12. ID sensors (IDS)

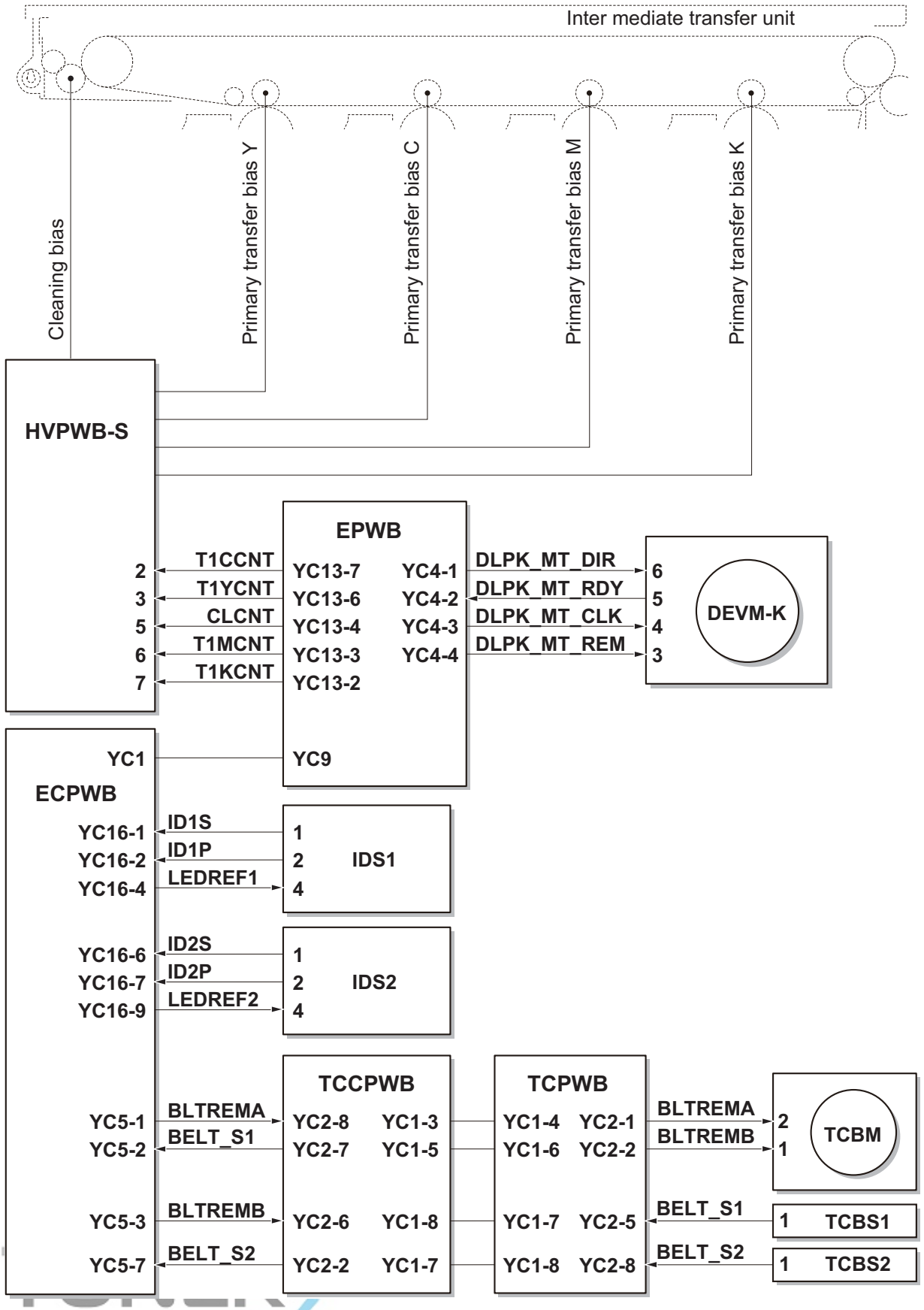

Figure 2-1-17 Intermediate transfer unit section block diagram

(2) Secondary transfer roller section

The secondary transfer roller section consists of the secondary transfer roller mounted to the paper conveying unit and the separation needle. To the secondary transfer roller, DC bias is applied from the high voltage PWB (HVPWB). The toner image formed on the transfer belt is transferred to the paper by the potential difference. Paper after transfer is separated from the drum by applying separation charging that is output from the high voltage PWB (HVPWB) to the separation electrode.

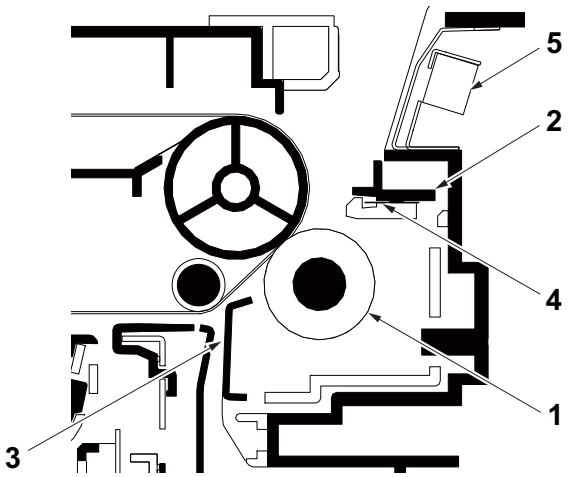

Figure 2-1-18 Secondary transfer roller section

1. Secondary transfer roller
2. Separation needle holder
3. Paper chute guide
4. Separation needle
5. Fuser pre sensor

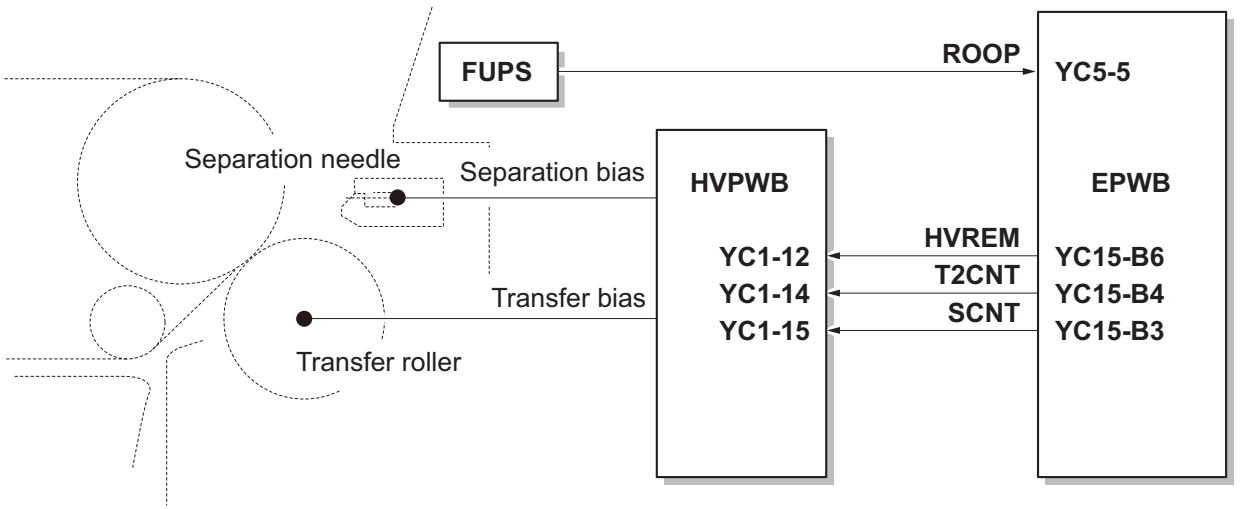

Figure 2-1-19 Secondary transfer roller section block diagram

2-1-6 Fuser section

The paper sent from the transfer/separation section is interleaved between the heat roller and the press roller. The heat roller is heated by the IH coil (IHC), and the toner is fused by heat and pressure and fixed onto the paper because the press roller is pressed by the fuser press spring. The surface temperature of heat roller is detected by the fuser thermistor1 (FTH1), fuser thermistor2 (FTH2) and the surface temperature of press roller is detected by the fuser thermistor3 (FTH3) and controlled by the engine PWB (EPWB). If the fuser section shows extremely high temperature, the power line will be shut off and the IH coil (IHC) is forced to turn off.

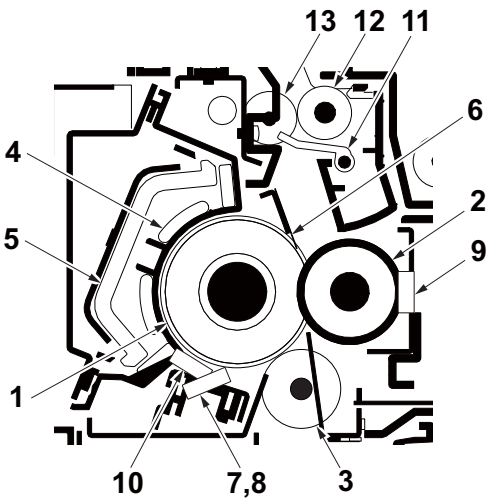

Figure 2-1-20 Fuser section

1. Heat roller
2. Press roller
3. Uniformity heat roller
4. IH coil (IHC)
5. Core
6. Separate plate
7. Fuser thermistor 1 (FTH1)
8. Fuser thermistor 2 (FTH2)
9. Fuser thermistor 3 (FTH3)
10. Fuser thermostat (FTS)
11. Actuator (eject sensor)
12. Eject roller
13. Eject pulley

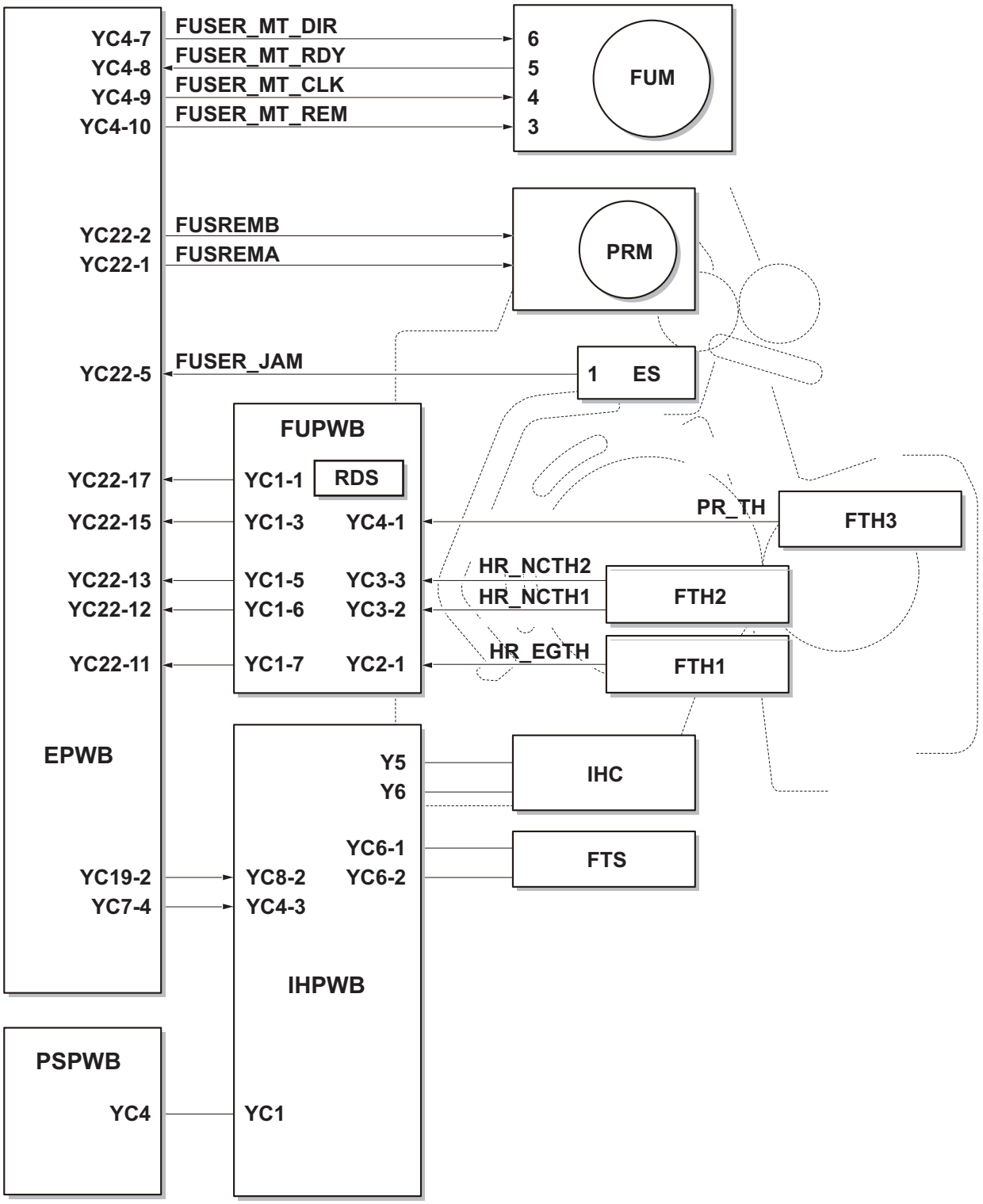

Figure 2-1-21 Fuser section block diagram

2-1-7 Eject/Feedshift section

The paper eject/feedshift section consists of the conveying path which sends the paper that has passed the fuser section to the inner tray, the job separator tray or the duplex conveying section.

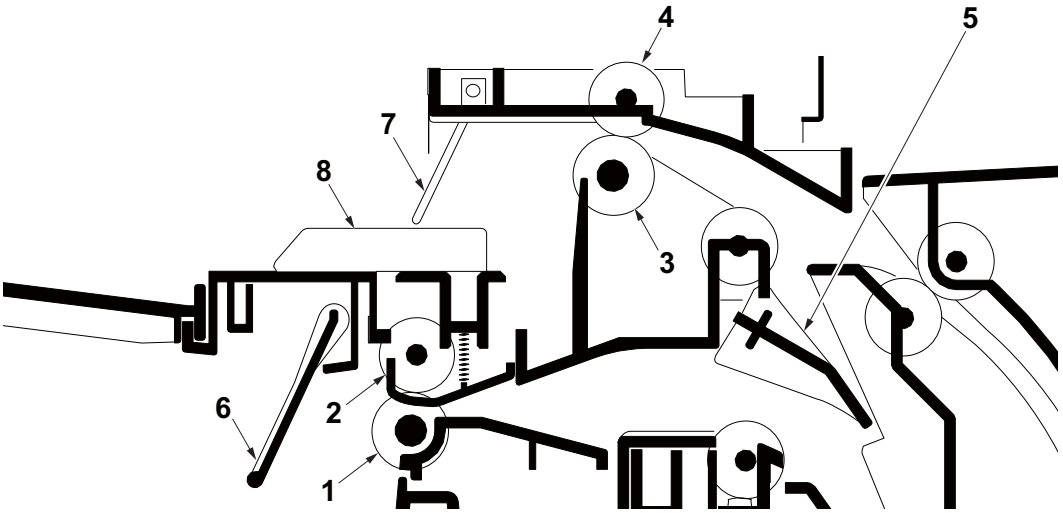

Figure 2-1-22 Eject/Feedshift section

1. Eject roller A
2. Eject pulley A
3. Eject roller B
4. Eject pulley B
5. Feedshift guide
6. Actuator (paper full sensor)
7. Actuator (job paper full sensor)
8. Actuator (job eject paper sensor)

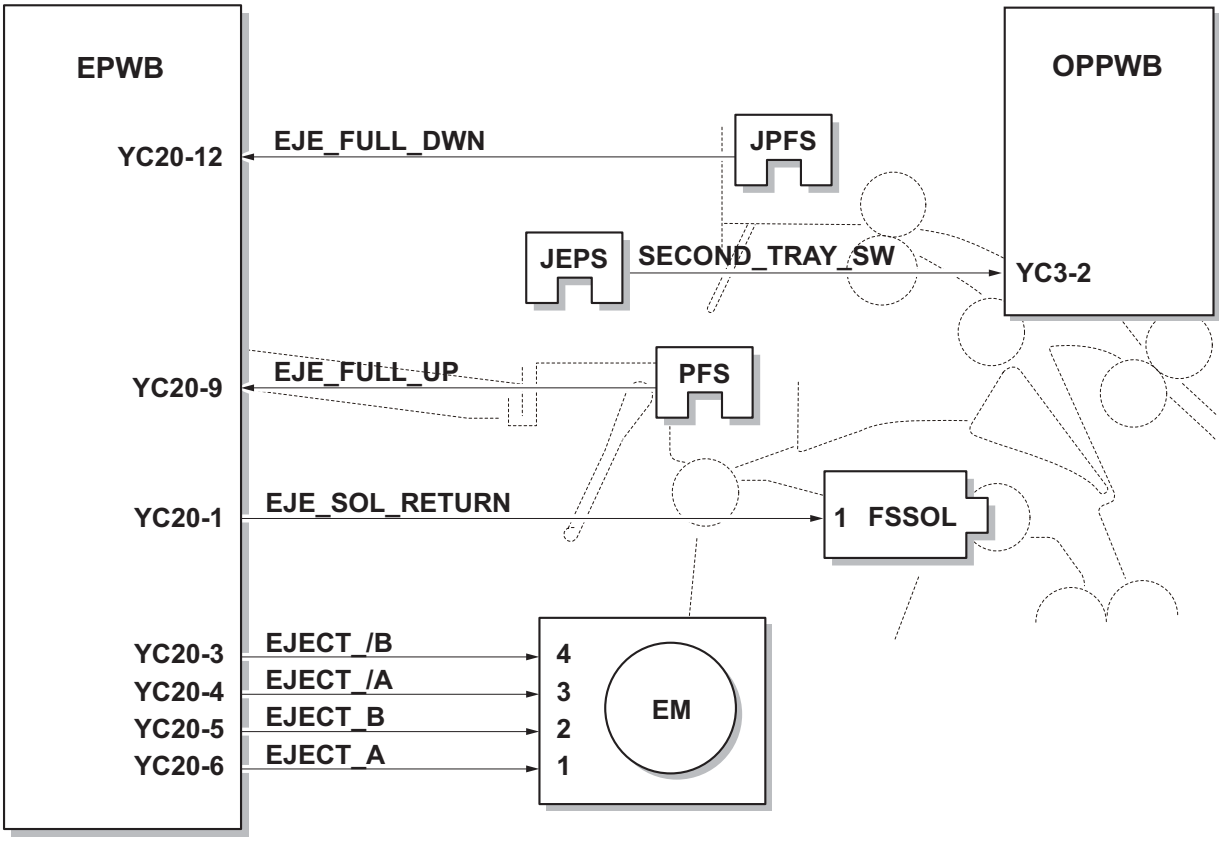

Figure 2-1-23 Eject/Feed shift section block diagram

2-1-8 Duplex conveying section

The duplex conveying section consists of conveying path which sends the paper sent from the eject/feedshift section to the paper feed/conveying section when duplex printing.

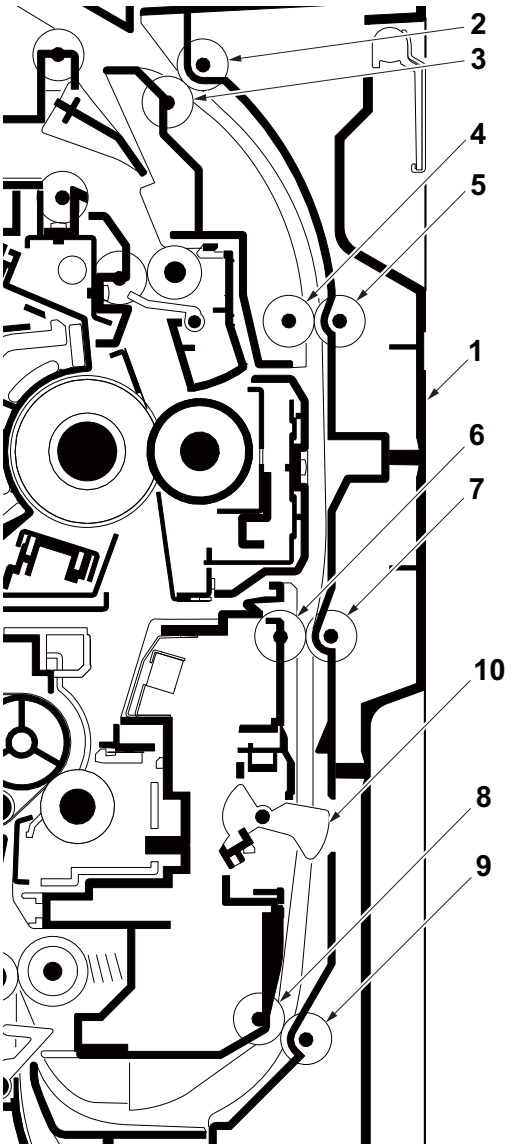

Figure 2-1-24 Duplex conveying section

1. Right cover 1
2. Duplex feed roller A
3. Duplex feed pulley A
4. Duplex feed roller B
5. Duplex feed pulley B
6. Duplex feed roller C
7. Duplex feed pulley C
8. Duplex feed roller D
9. Duplex feed pulley D
10. Actuater(duplex sensor)

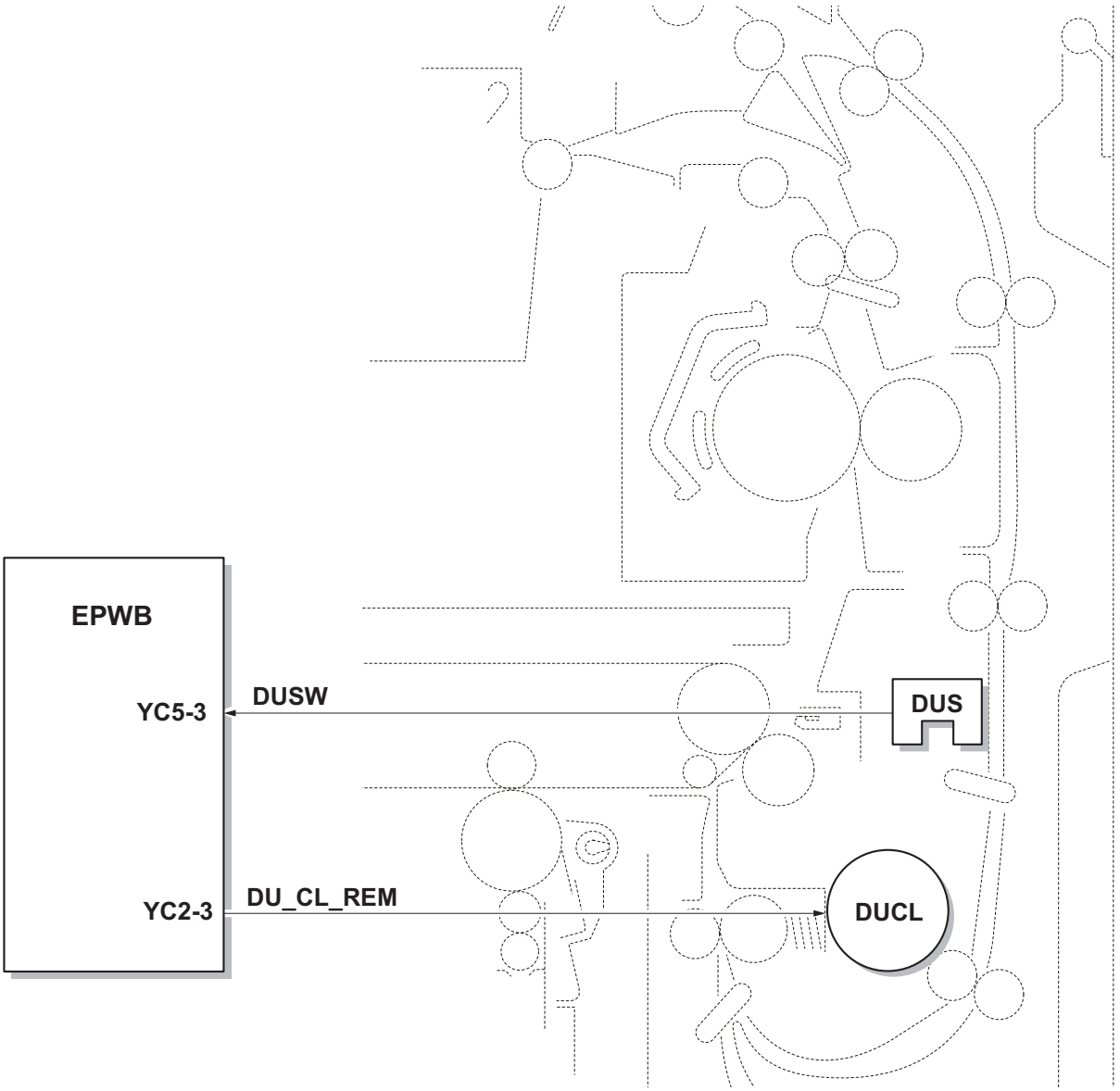

Figure 2-1-25 Duplex conveying section block diagram

2-1-9 Document processor

(1) Original feed section

The original feed section consists of the parts shown in figure. An original placed on the original tray is conveyed to the original conveying section. Original is fed by the rotation of the DP forwarding pulley and DP paper feed roller.

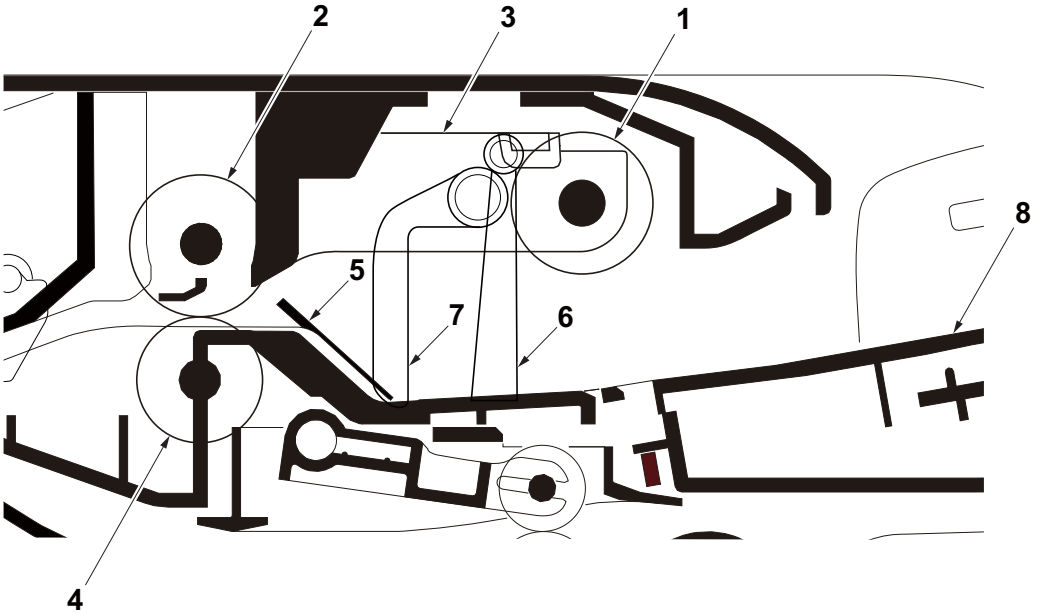

Figure 2-1-26 Original feed section

1. DP forwarding pulley
2. DP paper feed roller
3. DP feed holder
4. DP separation pulley
5. Front separation pad
6. Actuator (DP original sensor)
7. PF stopper
8. Original tray

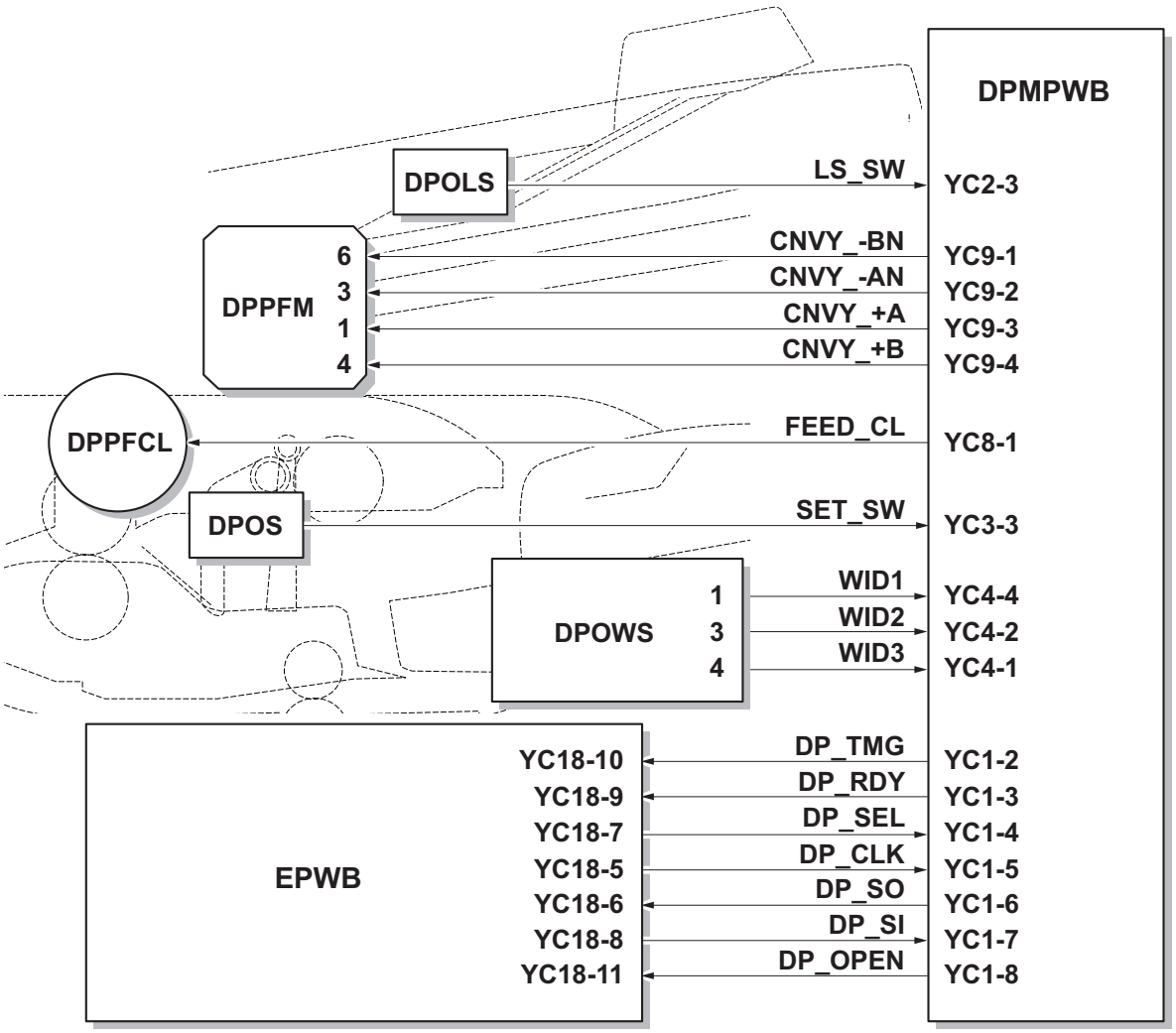

Figure 2-1-27 Original feed section block diagram

(2) Original conveying section

The original conveying section consists of the parts shown in figure. A conveyed original is scanned by the optical section (CCD) on the main machine when it passes through the slit glass of main machine.

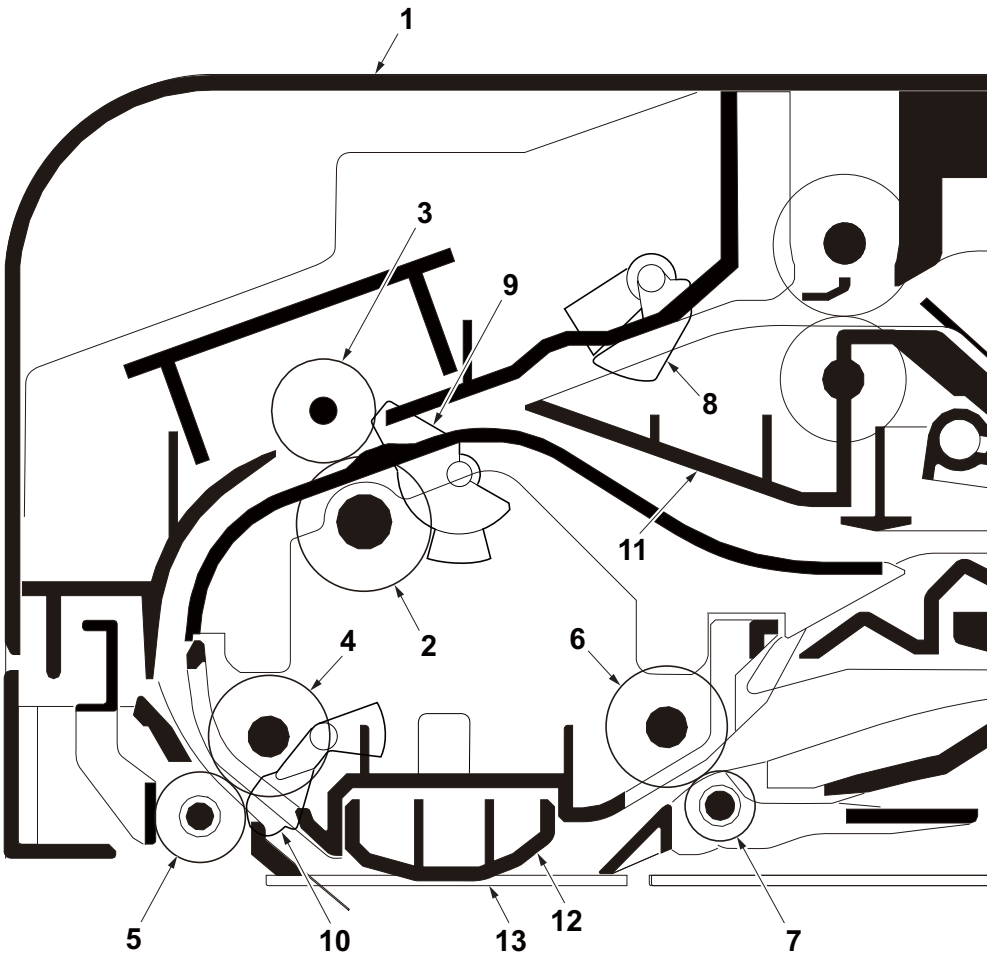

Figure 2-1-28 Original conveying section

1. DP top cover
2. DP registration roller
3. DP registration pulley
4. Conveying roller
5. Conveying pulley
6. Eject roller
7. Eject pulley
8. Actuator (DP paper feed sensor)
9. Actuator (DP registration sensor)
10. Actuator (DP timing sensor)
11. Switchback guide
12. Reading guide
13. Slit glass

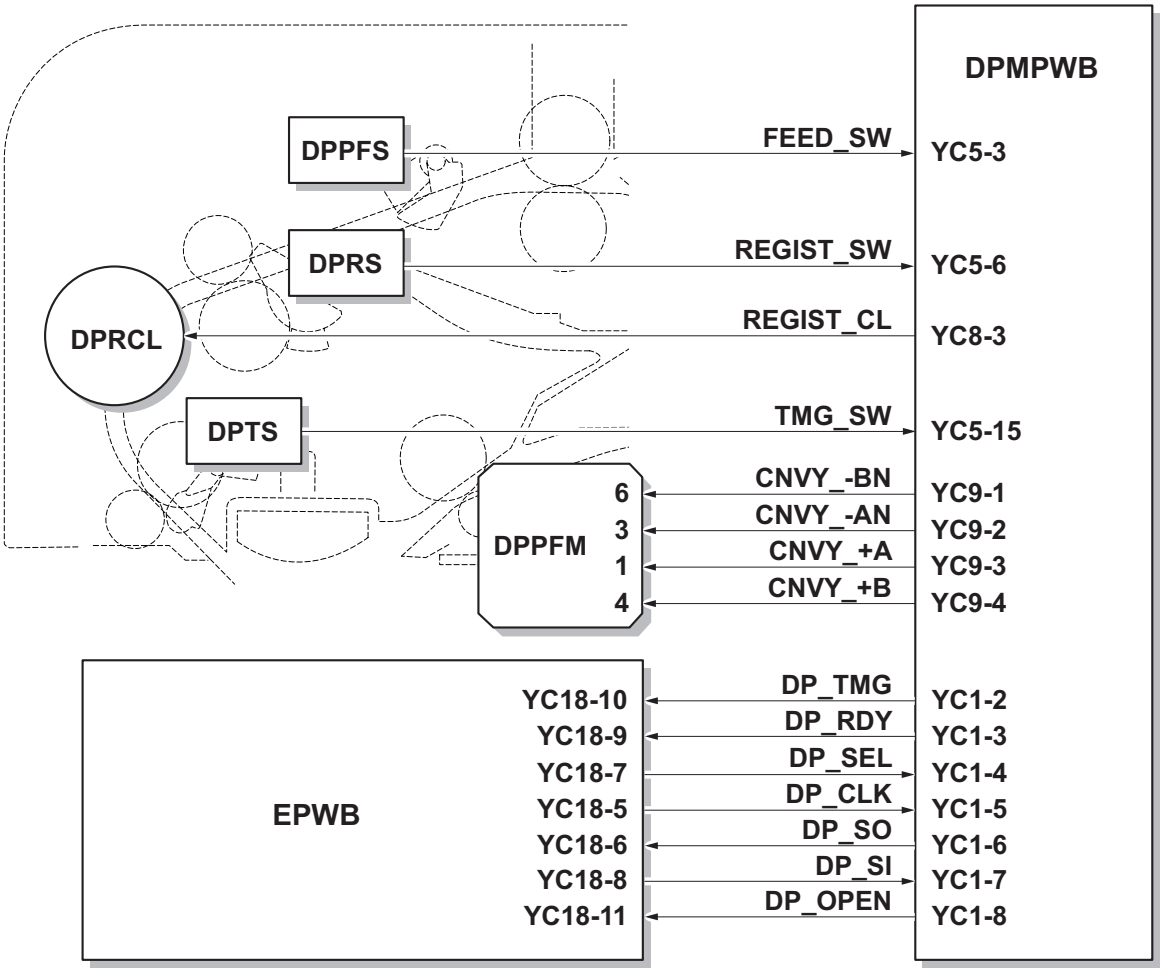

Figure 2-1-29 Original conveying section block diagram

(3) Original switchback/eject sections

The original switchback/eject sections consists of the parts shown in figure. An original of which scanning is complete is ejected to the original eject table by the eject roller. In the case of duplex switchback scanning, an original is conveyed temporarily to the switchback tray and conveyed again to the original conveying section by the switchback roller.

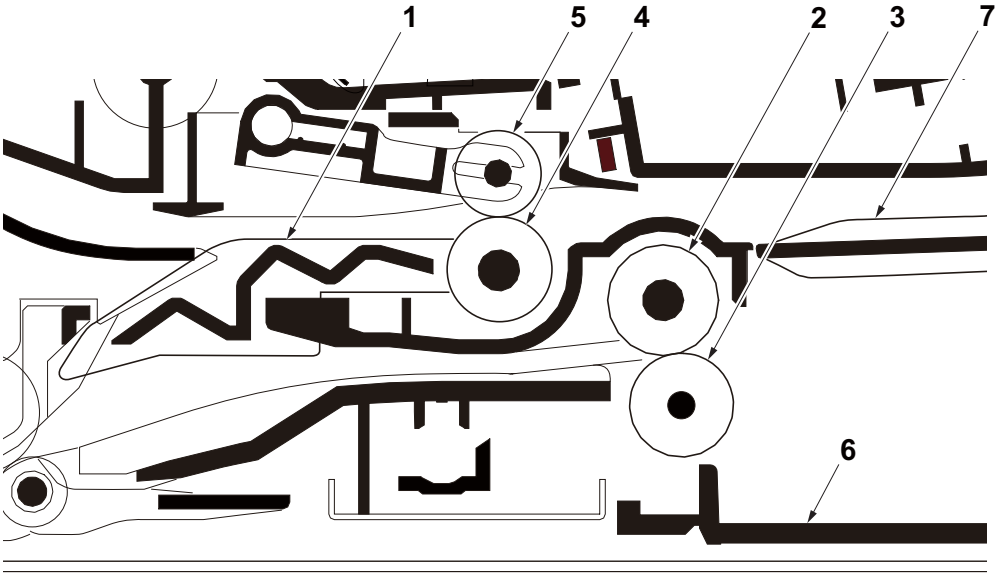

Figure 2-1-30 Original switchback/eject sections

1. Feedshift guide
2. Eject roller
3. Eject pulley
4. Switchback roller
5. Switchback pulley
6. Original eject table
7. Switchback tray

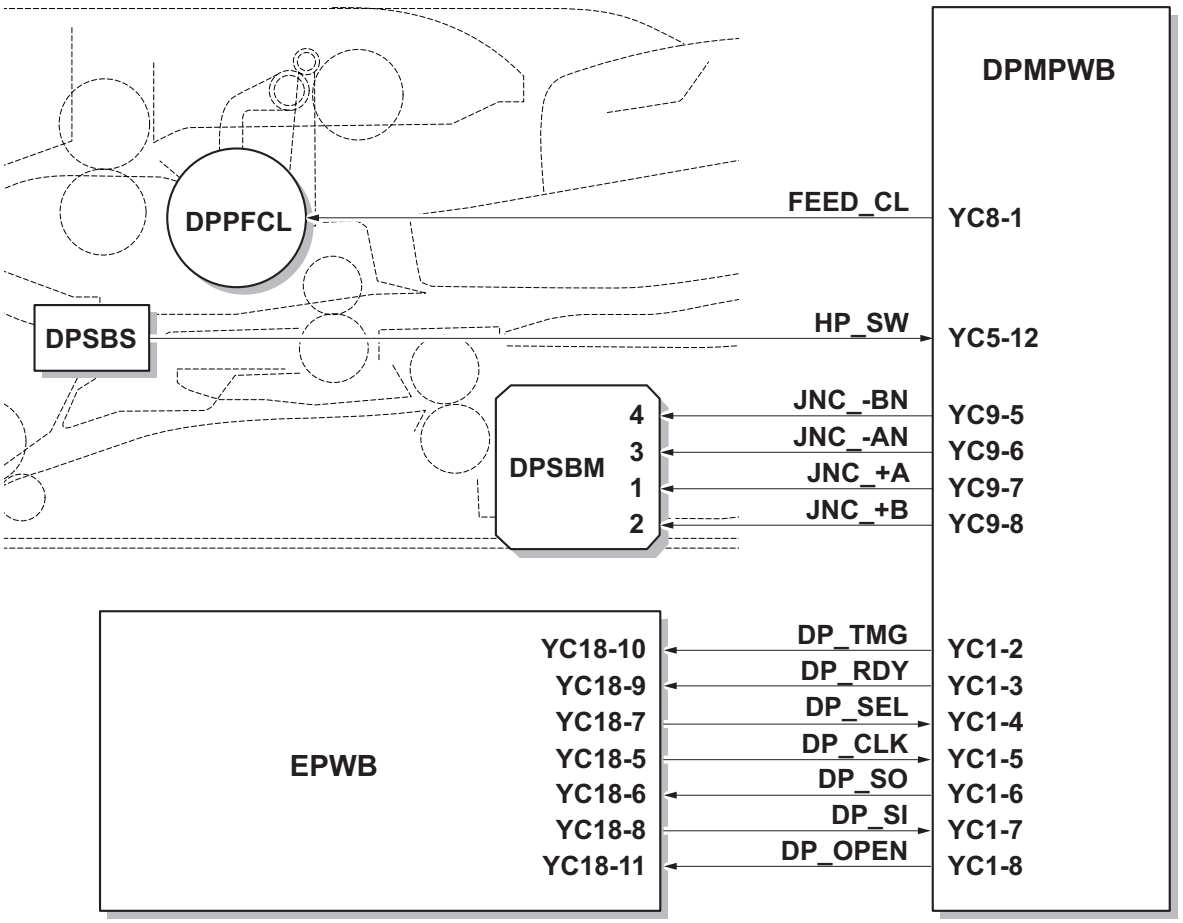

Figure 2-1-31 Original switchback/eject sections block diagram

2-2-1 Electrical parts layout

(1) PWBs

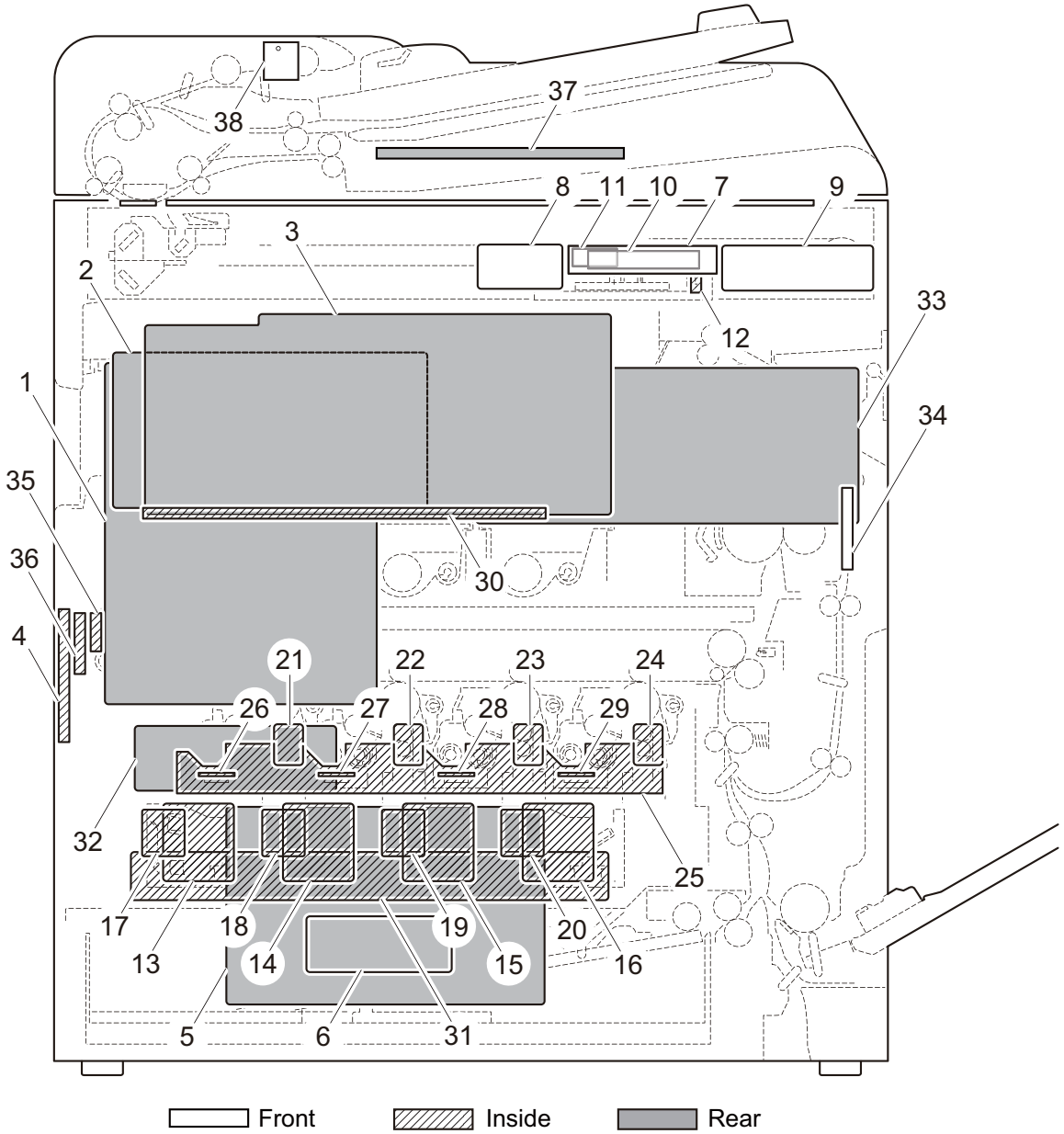

Figure 2-2-1 PWBs

1. Main PWB (MPWB) ..... Controls the software for print data processing and provides the interface with computers.
2. Engine PWB (EPWB)..... Controls printer hardware such as high voltage/bias output control, paper conveying system control, and fuser temperature control, etc.
3. High voltage PWB (HVPWB) ..... Generates main charging, developing bias, secondary transfer bias.
4. High voltage PWB sub (HVPWB-S)..... Generates primary transfer bias, cleaning bias.
5. Power source PWB (PSPWB) ..... After full-wave rectification of AC power source input, switching for converting to 24 V DC for output. Controls the fuser heater.
6. Power source PWB sub (PSPWB-S).... 5V output control when standing by.

7. Operation panel PWB main (OPPWB-M) ..... Consists of the LCD, LED indicators and key switches.
8. Operation panel PWB left (OPPWB-L) ..... Consists of the LED indicators and key switches.
9. Operation panel PWB right (OPPWB-R) ..... Consists of the LED indicators and key switches.
10. LCD (LCD) ..... LCD display.
11. LCD relay PWB (LCDRPWB) ..... Consists of wiring relay circuits between the operation panel PWB main and the LCD PWB.
12. CCD PWB (CCDPWB)..... Scans the image of originals.
13. APC PWB Y (APCPWB-Y) ..... Generates and controls the laser beamfor yellow.
14. APC PWB C (APCPWB-C)..... Generates and controls the laser beam for cyan.
15. APC PWB M (APCPWB-M) ..... Generates and controls the laser beam for magenta.
16. APC PWB K (APCPWB-K) ..... Generates and controls the laser beam for black.
17. BD PWB Y (BDPWB-Y) ..... Controls horizontal synchronizing timing of laser beam for yellow.
18. BD PWB C (BDPWB-C)..... Controls horizontal synchronizing timing of laser beam for cyan.
19. BD PWB M (BDPWB-M)..... Controls horizontal synchronizing timing of laser beam for magenta.
20. BD PWB K (BDPWB-K) ..... Controls horizontal synchronizing timing of laser beam for black.
21. Drum PWB Y (DRPWB-Y) ..... Relays wirings from electrical components on the drum unit for yellow.
    Stores the drum's identifications a EEPROM.
22. Drum PWB C (DRPWB-C)..... Relays wirings from electrical components on the drum unit for cyan.
    Stores the drum's identifications a EEPROM.
23. Drum PWB M (DRPWB-M)..... Relays wirings from electrical components on the drum unit for magenta.
    Stores the drum's identifications a EEPROM.
24. Drum PWB K (DRPWB-K) ..... Relays wirings from electrical components on the drum unit for black.
    Stores the drum's identifications a EEPROM.
25. Drum connect PWB (DRCPWB)..... Consists of wiring relay circuit between engine PWB and the drum unit.
26. Developing PWB Y (DEVPWB-Y)..... Relays wirings from electrical components on the developing unit for yellow.
    Stores the developer's identifications a EEPROM.
27. Developing PWB C (DEVPWB-C) ..... Relays wirings from electrical components on the developing unit for cyan.
    Stores the developer's identifications a EEPROM.
28. Developing PWB M (DEVPWB-M)..... Relays wirings from electrical components on the developing unit for magenta.
    Stores the developer's identifications a EEPROM.
29. Developing PWB K (DEVPWB-K)..... Relays wirings from electrical components on the developing unit for black.
    Stores the developer's identifications a EEPROM.
30. RFID PWB (RFPWB)..... Reads the container information.
31. LSU connect PWB (LSUCPWB)..... Consists of wiring relay circuit between main PWB, engine connect PWB and LSU unit.
32. Engine connect PWB (ECPWB) ..... Consists of wiring relay circuit between engine PWB and drum connect PWB, transfer connect PWB, option unit.
33. IH PWB (IHPWB)..... Control of IH coil that heats fuser roller.
34. Fuser PWB (FUPWB)..... Relays wirings from electrical components on the fuser unit.
    Fuser individual information in EEPROM storage.

35. Transfer PWB (TCPWB) ..... Relays wirings from electrical components on the intermediate transfer unit.
Intermediate transfer individual information in EEPROM storage.
36. Transfer connect PWB (TCCPWB)..... Consists of wiring relay circuit between engine connect PWB and Transfer PWB.
37. DP main PWB (DPMPWB) ..... Consists the motor and clutch driver circuit and wiring relay circuit.
38. DP LED PWB (DPLEDPWB) ..... Displays the presence of the original.

PWB names conversion

No.	Name used in service manual	Name used in parts list
1	Main PWB (MPWB)	PARTS PWB MAIN ASSY SP
2	Engine PWB (EPWB)	PARTS PWB ENGINE ASSY SP
3	Engine connect PWB (ECPWB)	PARTS PWB ENGINE CONNECT ASSY SP
4	High voltage PWB (HVPWB)	PARTS HVU1 SP
5	High voltage PWB sub (HVPWB-S)	PARTS HVU2 SP
6	Power source PWB (PSPWB)	PARTS LVU MAIN 100 SP PARTS LVU MAIN 200 SP
7	Power source PWB sub(PSPWB-S)	PARTS LVU SUB 100 SP PARTS LVU SUB 200 SP
8	IH PWB (IHPWB)	PARTS PWB IH 100 ASSY SP PARTS PWB IH 200 ASSY SP
9	Operation panel PWB main(OPPWB-M)	PARTS PWB PANEL MAIN ASSY SP
10	Drum connect PWB (DRCPWB)	PARTS PWB DRUM DLP CONNECT ASSY SP
11	Transfer connect PWB (TCCPWB)	PARTS PWB TRANSFER CONNECT ASSY SP
12	LSU connect PWB (LSUCPWB)	PARTS PWB LSU CONNECT ASSY SP
13	RFID PWB (RFIDPWB)	PARTS PWB RFID ASSY SP
14	DP main PWB (DPMPWB)	PARTS PWB DRIVE ASSY SP

(2) Switches and sensors

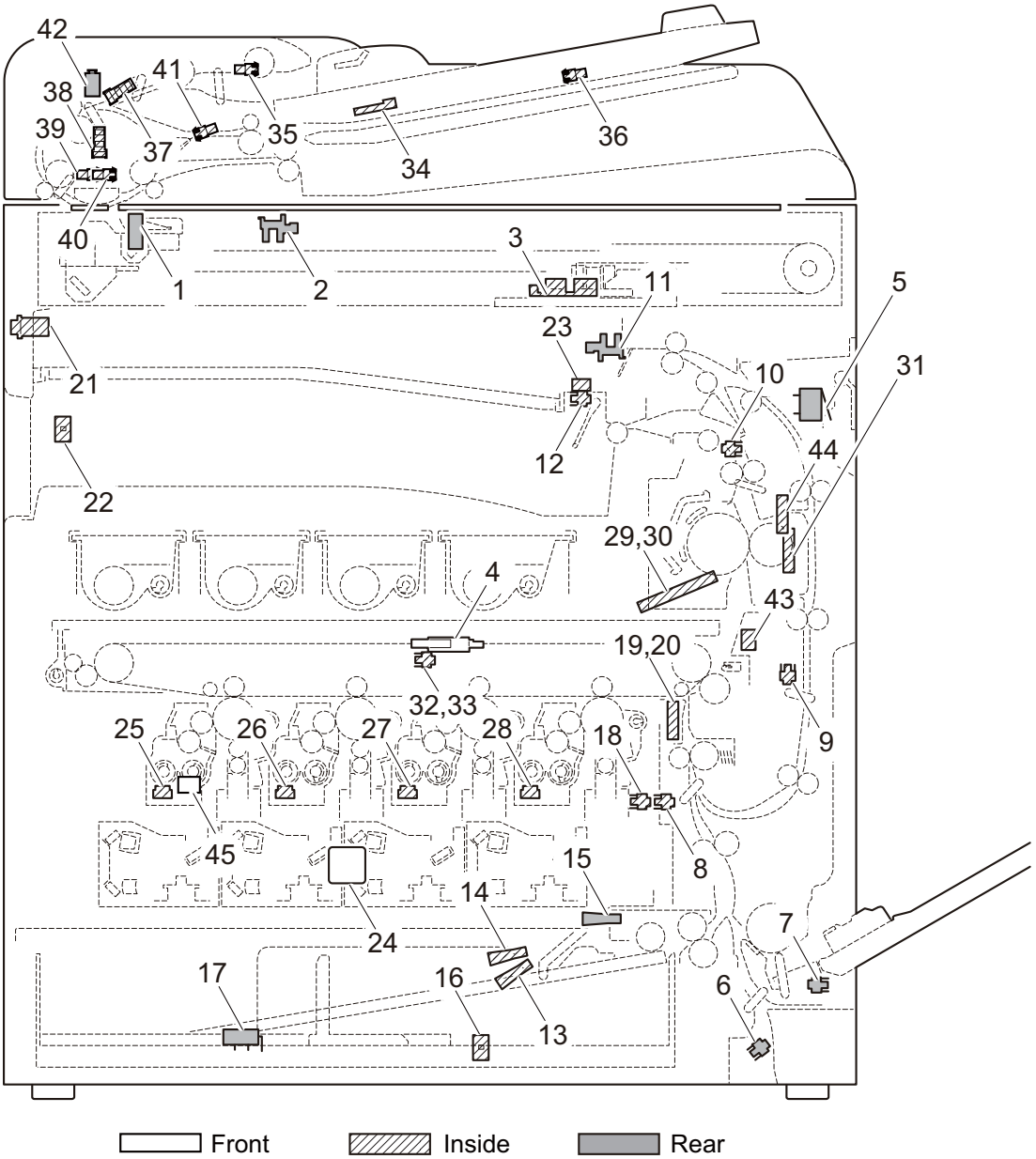

Figure 2-2-2 Switches and sensors

1. Home position sensor (HPS) ..... Detects the ISU in the home position.
2. Original detection switch (ODSW) ..... Operates the original size detection sensor.
3. Original size sensor (OSS) ..... Detects the size of the original.
4. Front cover switch (FCSW)..... Detects the opening and closing of the front cover.
5. Right cover switch (RCSW) ..... Detects the opening and closing of the right cover.
6. Feed sensor (FS)..... Detects a paper misfeed in the vertical conveying section.
7. MP paper sensor (MPPS)..... Detects the presence of paper on the MP tray.
8. Registration sensor (RS)..... Controls the secondary paper feed start timing.
9. Duplex sensor (DUS)..... Detects a paper jam in the duplex section.
10. Eject sensor (ES) ..... Detects a paper misfeed in the fuser or eject section.
11. Job paper full sensor (JPFS)..... Detects the paper full in the job separator tray.
12. Paper full sensor (PFS)..... Detects the paper full in the inner tray.
13. Paper sensor 1 (PS1) ..... Detects the presence of paper in the cassette.

14. Paper sensor 2 (PS2) ..... Detects the presence of paper in the cassette.
15. Lift sensor (LS)..... Detects activation of upper limit of the bottom plate.
16. Paper size width switch (PWSW)..... Detects the width of paper in the cassette.
17. Paper size length switch (PLSW) ..... Detects the length of paper in the cassette.
18. ID shutter sensor (IDSS)..... Detects the position of the iD shutter.
19. ID sensor 1 (IDS1) ..... Measurement of density of toner at calibration.
20. ID sensor 2 (IDS2) ..... Measurement of density of toner at calibration.
21. Main power switch (MSW) ..... Turns ON/OFF the AC power source.
22. Bridge detection switch (BRDSW) ..... Detects the presence the bridge.
23. Job eject papersensor (JEPS) ..... Detects the presence of paper in the job separator.
24. Temperature sensor (TEMS)..... Detects temperature and absolute humidity in machine.
25. Toner sensor Y (TS-Y) ..... Detects the amount of toner remainder in the developing unit Y.
26. Toner sensor C (TS-C)..... Detects the amount of toner remainder in the developing unit C.
27. Toner sensor M (TS-M)..... Detects the amount of toner remainder in the developing unit M.
28. Toner sensor K (TS-K) ..... Detects the amount of toner remainder in the developing unit K.
29. Fuser thermistor 1 (FTH1) ..... Detects the heat roller temperature.(edge)
30. Fuser thermistor 2 (FTH2) ..... Detects the heat roller temperature.(center)
31. Fuser thermistor 3 (FTH3) ..... Detects the press roller temperature.
32. TC belt sensor 1 (TCBS1)..... Detects the position of the primary transfer belt.
33. TC belt sensor 2 (TCBS2)..... Detects the position of the primary transfer belt.
34. DP original size width sensor
    (DPOWS)..... Detects the width of the original.
35. DP original sensor (DPOS)..... Detects the presence of an original.
36. DP original size length sensor
    (DPOLS) ..... Detects the length of the original.
37. DP paper feed sensor (DPPFS)..... Detects a paper misfeed.
38. DP registration sensor (DPRS)..... Controls the secondary paper feed start timing.
39. DP timing sensor (DPTS)..... Detects the original scanning timing.
40. DP open/close sensor (DPOCS)..... Detects the opening/closing of the DP.
41. DP switchback sensor (DPSBS)..... Detects the switchback guide in the home position.
42. DP interlock switch (DPILSW) ..... Shuts off 24 V DC power line when the dp top coveris opened.
43. Fuser pre sensor (FUPS)..... Detects the JAM on this side of fuser.
44. Fuser roller rotation detection sensor
    (FURDS) ..... Detects the rotation of the fuser roller.
45. Waste toner sensor (WTS)..... Detects when the waste toner box is full.

(3) Motors

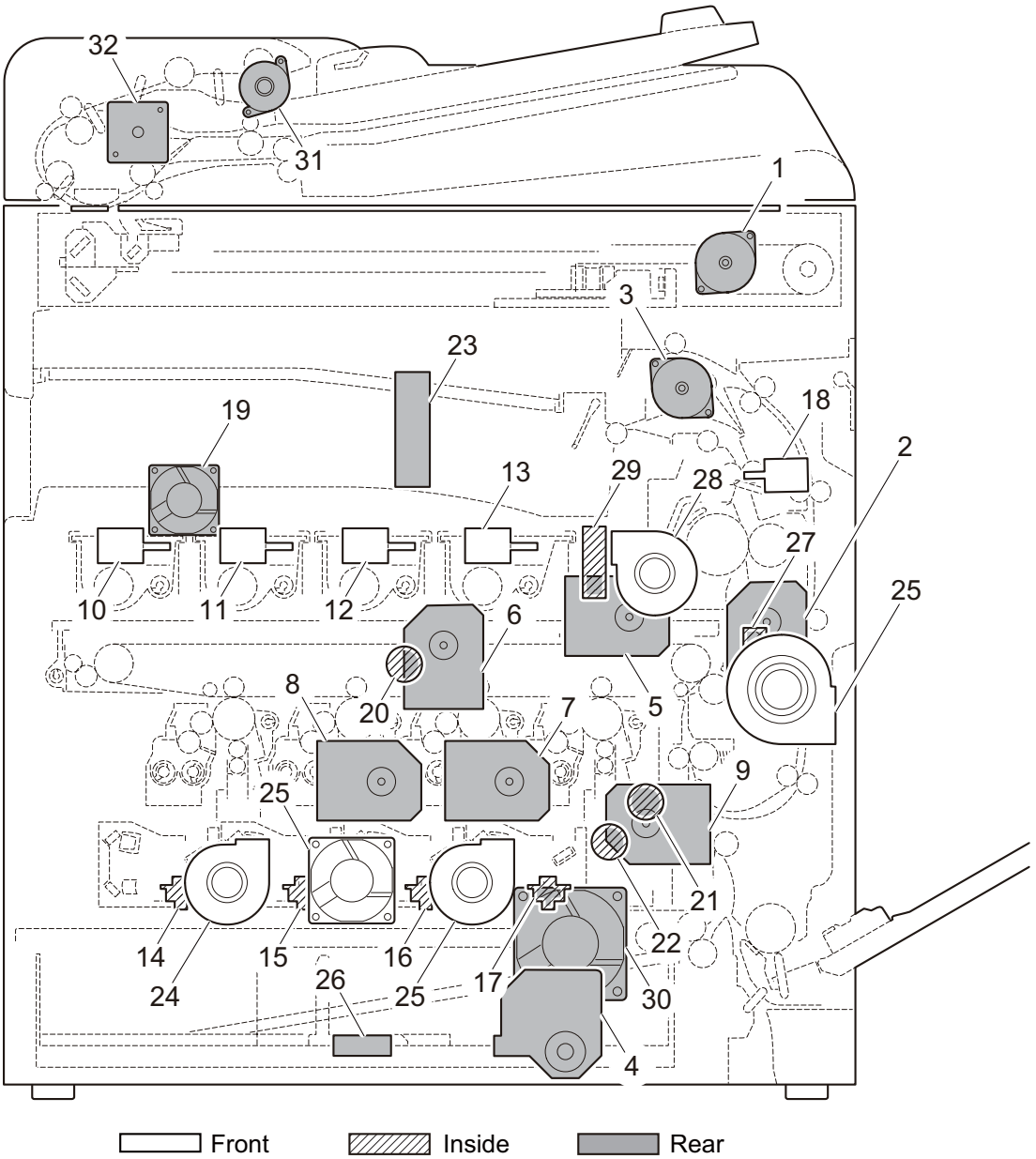

Figure 2-2-3 Motors

1. ISU motor (ISUM) ..... Drives the ISU.
2. Fuser motor (FUM) ..... Drives the fuser section.
3. Eject motor (EM)..... Drives the eject section.
4. Lift motor (LM)..... Operates the bottom plate.
5. Drum motor K (DRM-K) ..... Drives the drum unit K.
6. Drum motor YCM (DRM-YCM) ..... Drives the drum unit YCM.
7. Developer motor K (DEVM-K)..... Drives the developer unit K.
8. Developer motor YCM (DEVM-YCM) ... Drives the developer unit YCM.
9. Conveying motor (CM)..... Drives the paper feed section and conveying section.
10. Toner motor Y (TM-Y) ..... Replenishes toner to the developer unit Y.
11. Toner motor C (TM-C)..... Replenishes toner to the developer unit C.
12. Toner motor M (TM-M) ..... Replenishes toner to the developer unit M.
13. Toner motor K (TM-K) ..... Replenishes toner to the developer unit K.

14. Polygon motor Y (PM-Y) ..... Drives the polygon mirror Y.
15. Polygon motor C (PM-C)..... Drives the polygon mirror C.
16. Polygon motor M (PM-M)..... Drives the polygon mirror M.
17. Polygon motor K (PM-K) ..... Drives the polygon mirror K.
18. Fuser press release motor (FPRM) ..... Drives the pressure release system of the fuser.
19. Controller fan motor (CONFM)..... Cools the controller section.
20. Transfer belt motor (TCBM) ..... Drives the transfer belt.
21. ID shutter motor (IDSM)..... Drives the ID sensor cleaning section.
22. LSU cleaning motor (LSUCM) ..... Drives the LSU cleaning section.
23. IH fan motor (IJHFM) ..... Cools the IH PWB.
24. Developer fan motor (DEVFM) ..... Cools the developer section.
25. LSU fan motor (LSUFM) ..... Cools the LSU section.
26. Power source fan motor (PSFM) ..... Cools the power source PWB.
27. Fuser fan motor (FUFM) ..... Cools the fuser and eject sections.
28. Container fan motor (CFM) ..... Cools the toner container section.
29. IH coil fan motor (IHCFM) ..... Cools the IH coil.
30. Imaging fan motor (IMGFM)..... Cools the imaging section.
31. DP paper feed motor (DPPFM)..... Drives the original feed section.
32. DP switchback motor (DPSBM) ..... Drives the original switchback section.

(4) Others

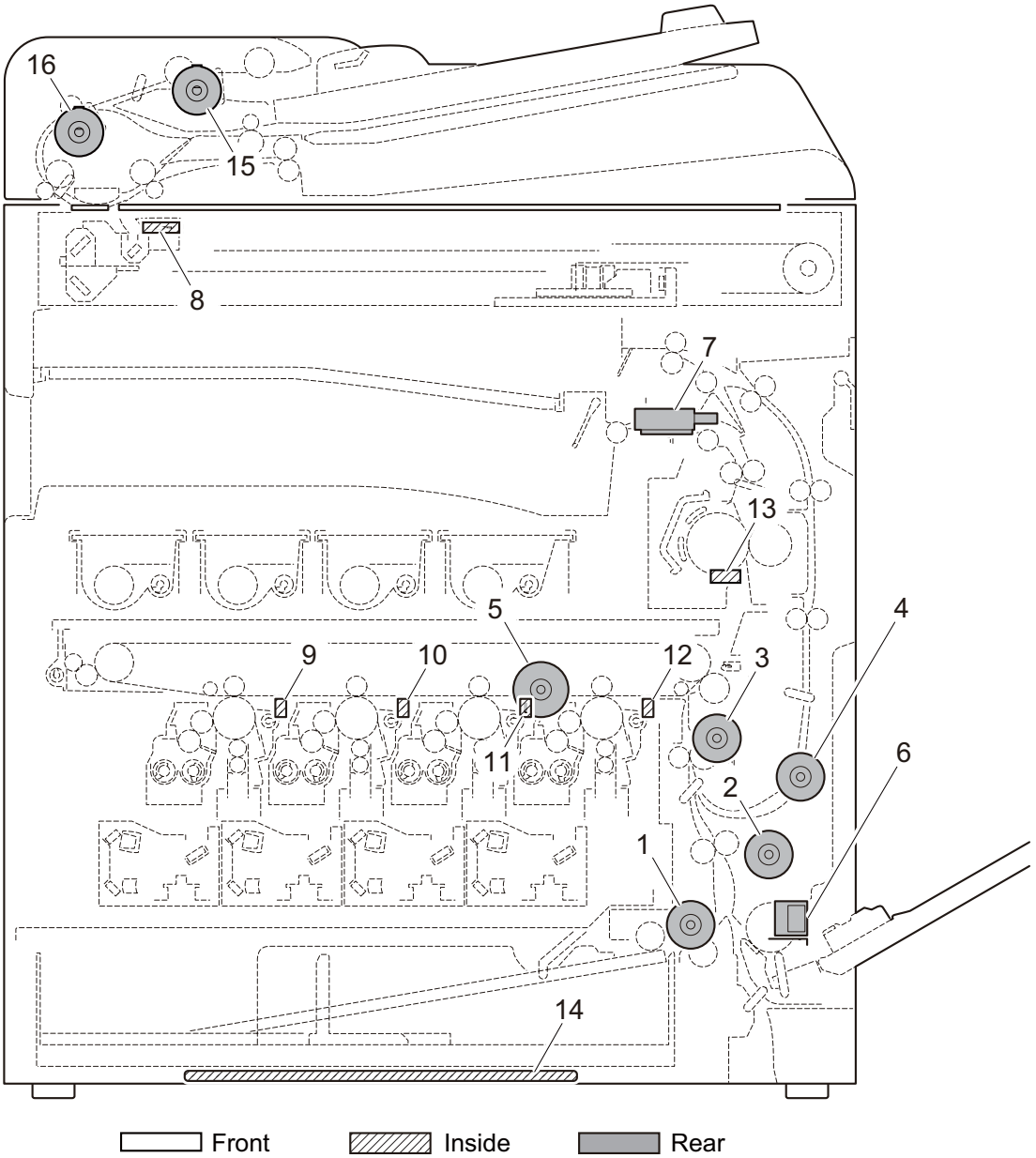

Figure 2-2-4 Others

1. Paper feed clutch (PFCL) ..... Controls the primary paper feed from cassette.
2. Mid clutch (MCL)..... Controls the paper conveying.
3. Registration clutch (RCL)..... Controls the secondary paper feed.
4. Duplex clutch (DUCL) ..... Controls the drive of the duplex feed roller.
5. Developer stop clutch (DEVSCL)..... Controls the drive of the developer.
6. MP solenoid (MPSOL) ..... Controls the MP bottom plate.
7. Feedshift solenoid (FSSOL)..... Operates the feedshift guide.
8. Exposure lamp (EL) ..... Exposes originals.
9. Cleaning lamp Y (CL-Y) ..... Eliminates the residual electrostatic charge on the drum.
10. Cleaning lamp C (CL-C)..... Eliminates the residual electrostatic charge on the drum.
11. Cleaning lamp M (CL-M)..... Eliminates the residual electrostatic charge on the drum.
12. Cleaning lamp K (CL-K)..... Eliminates the residual electrostatic charge on the drum.
13. Fuser thermostat (FTS)..... Prevents overheating of the heat roller.
14. Cassette heater (CH) ..... Dehumidifies the cassette section.

15. DP paper feed clutch (DPPFCL)..... Controls the drive of the DP forwarding pulley and DP paper feed roller.
16. DP registration clutch (DPRCL) ..... Controls the secondary paper feed.

This page is intentionally left blank.

2-3-1 Main PWB

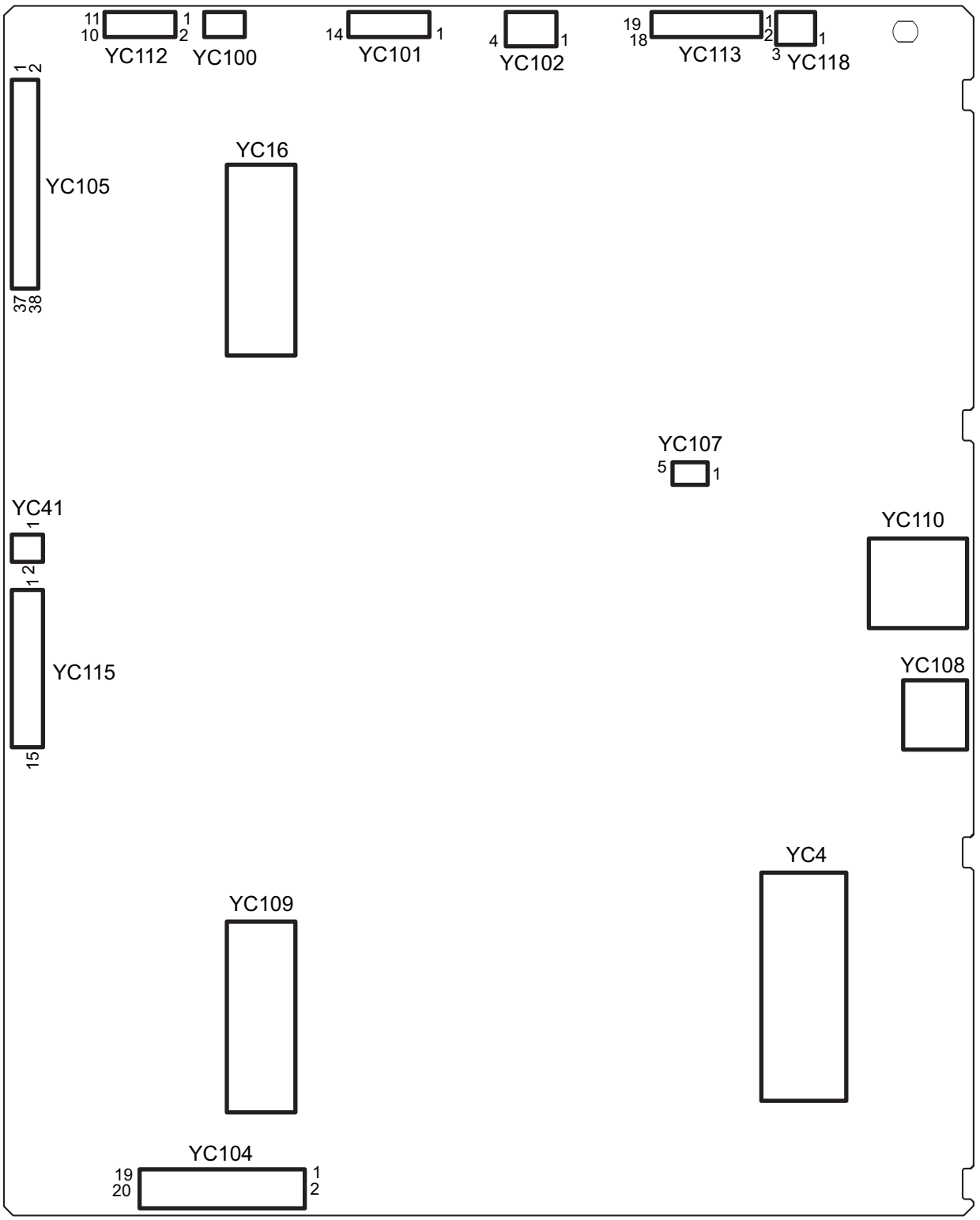

Figure 2-3-1 Main PWB silk-screen diagram

Connector	Pin	Signal	I/O	Voltage	Description
YC100	1	VBUS	O	5 V DC	5 V DC power output
Connected to operathion panel PWB main(USB)	2	DATA-	I/O	LVDS	USB data signal
	3	DATA+	I/O	LVDS	USB data signal
	4	ID	-	-	Not used
	5	SHIELD_GND	-	-	Ground
YC101	1	NC	-	-	Not used
Connected to operation panel PWB main (contorol)	2	GND	-	-	Ground
	3	PANEL_STATUS	I	0/3.3 V DC	Operation panel status signal
	4	INT_POWER KEY	I	0/3.3 V DC	Power key: On/Off
	5	PANEL_RESET	O	0/3.3 V DC	OPPWB-M reset signal
	6	AUDIO	O	Analog	Voice output signal
	7	LIGHTOFF_POWER	O	0/3.3 V DC	Sleep return signal 1
	8	SHUTDOWN	O	0/3.3 V DC	24 V down signal
	9	LED_PROCESSING	O	0/3.3 V DC	Processing LED control signal
	10	LED_ATTENTION	O	0/3.3 V DC	Attention LED control signal
	11	LED_MEMORY	O	0/3.3 V DC	Memory LED control signal
	12	SUSPEND_Power	O	5 V DC	5 V DC power output to OPPWB-M
	13	ENERGY_SAVE	O	0/3.3 V DC	Energy save signal
	14	BEEP_POWERON	O	0/3.3 V DC	Sleep return signal 0
YC102	1	5V2	O	5 V DC	5 V DC power output to OPPWB-M
Connected to operation panel PWB main(power source)	2	5V2	O	5 V DC	5 V DC power output to OPPWB-M
	3	GND	-	-	Ground
	4	GND	-	-	Ground

Connector	Pin	Signal	I/O	Voltage	Description
YC104	1	VDN(K)	O	LVDS	Video data signal (-)
Connected to LSU connect PWB	2	VDP(K)	O	LVDS	Video data signal (+)
	3	SH(K)	O	0/3.3 V DC	Sample/hold signal
	4	BD(K)	I	0/3.3 V DC(pulse)	Horizontal synchronizing signal
	5	SGND	-	-	Ground
	6	VDN(M)	O	LVDS	Video data signal (-)
	7	VDP(M)	O	LVDS	Video data signal (+)
	8	SH(M)	O	0/3.3 V DC	Sample/hold signal
	9	BD(M)	I	0/3.3 V DC(pulse)	Horizontal synchronizing signal
	10	SGND	-	-	Ground
	11	VDN(C)	O	LVDS	Video data signal (-)
	12	VDP(C)	O	LVDS	Video data signal (+)
	13	SH(C)	O	0/3.3 V DC	Sample/hold signal
	14	BD(C)	I	0/3.3 V DC(pulse)	Horizontal synchronizing signal
	15	SGND	-	-	Ground
YC105	1	SLEEPOFF	I	0/3.3 V DC	Sleep Off signal
Connected to engine PWB	2	ENG_HLD	O	0/3.3 V DC	Engine hold signal
	3	SCAN_HLD	O	0/3.3 V DC	Scan hold signal
	4	LIGHTSLEEP N	O	0/3.3 V DC	Light sleep shift signal
	5	24V4	I	24 V DC	24 V DC power input from EPWB
	6	24V4	I	24 V DC	24 V DC power input from EPWB
	7	5V4	I	5 V DC	5 V DC power input from EPWB
	8	3.3V0	I	3.3 V DC	3.3 V DC power input from EPWB
	9	3.3V4	I	3.3 V DC	3.3 V DC power input from EPWB
	10	3.3V4	I	3.3 V DC	3.3 V DC power input from EPWB
	11	24VDOWN	I	0/3.3 V DC	24 V down signal
	12	GND	-	-	Ground
	13	GND	-	-	Ground
	14	GND	-	-	Ground
	15	GND	-	-	Ground
	16	GND	-	-	Ground
	17	HYP_SCL	I	0/3.3 V DC(pulse)	Clock signal
	18	HYP_SDA	I	0/3.3 V DC(pulse)	Data signal
	19	HYP_INT	O	0/3.3 V DC	Interrupt sijgnal
	20	AQUA_CLK	I	0/3.3 V DC(pulse)	Clock signal
	21	AQUA_SO	O	0/3.3 V DC(pulse)	Serial communication data signal output
	22	AQUA_SI	I	0/3.3 V DC(pulse)	Serial communication data signal intput

Connector	Pin	Signal	I/O	Voltage	Description
YC105	23	AQUA_SEL	I	0/3.3 V DC	Select signal
Connected to engine PWB	24	AQUA_RDY	O	0/3.3 V DC	Ready signal
	25	PVSYNC	I	0/3.3 V DC(pulse)	Vertical synchronizing signal
	26	OVSYNCMON	O	0/3.3 V DC	Sub-scanning monitor signal
	27	PAGEST	I	0/3.3 V DC	Sub-scanning standard signal
	28	EME_CLK	O	0/3.3 V DC(pulse)	Clock signal
	29	EME_SO	O	0/3.3 V DC(pulse)	Serial communication data signal output
	30	EME_SI	I	0/3.3 V DC(pulse)	Serial communication data signal intput
	31	EME_BSY	I	0/3.3 V DC	Busy signal
	32	EME_DIR	I	0/3.3 V DC	Communication direction change signal
	33	EME_IRN	I	0/3.3 V DC	Interrupt signal
	34	5V4IL	-	DC5 V	5 V DC power input from EPWB
	35	BDN(K)	O	0/3.3 V DC(pulse)	Horizontal synchronizing signal (K)
	36	BDN(M)	I	0/3.3 V DC(pulse)	Horizontal synchronizing signal (M)
	37	BDN(C)	I	0/3.3 V DC(pulse)	Horizontal synchronizing signal (C)
	38	BDN(Y)	-	0/3.3 V DC(pulse)	Horizontal synchronizing signal (Y)
YC107	1	VBUS	O	5 V DC	5 V DC power output
Connected to USB-HOST	2	DATA-	I/O	LVDS	USB data signal
	3	DATA+	I/O	LVDS	USB data signal
	4	ID	-	-	Not used
	5	SHIELD_GND	-	-	Ground
YC112	1	+24V4	O	24 V DC	24 V DC power output to LEDPWB
Connected to exposure lamp (LED PWB)	2	+24V4	O	24 V DC	24 V DC power output to LEDPWB
	3	POW	O	0/3.3 V DC	LED driver: On/Off
	4	PWM	O	0/3.3 V DC	PWM signal
	5	PGND	-	-	Ground
	6	SGND	-	-	Ground
	7	VSET	O	Analog	Analog voltage
	8	SCL	O	0/3.3 V DC(pulse)	Clock signal
	9	SDA	I/O	0/3.3 V DC(pulse)	Data signal
	10	FAIL	I	0/3.3 V DC	Error signal
	11	5V4	O	5 V DC	5 V DC power output to LEDPWB

Connector	Pin	Signal	I/O	Voltage	Description
YC113	1	CCDPWR	O	12 V DC	12 V DC power output to CCDPWB
Connected to CCD PWB	2	CCDPWR	O	12 V DC	12 V DC power output to CCDPWB
	3	+5V4	O	5 V DC	5 V DC power output to CCDPWB
	4	+5V4	O	5 V DC	5 V DC power output to CCDPWB
	5	+5V4	O	5 V DC	5 V DC power output to CCDPWB
	6	+3.3V4	O	3.3 V DC	3.3 V DC power output to CCDPWB
	7	CCD_SH	O	0/3.3 V DC	Shift gate signal
	8	GND	-	-	Ground
	9	RS	O	0/3.3 V DC	Reset signal
	10	GND	-	-	Ground
	11	CP	O	0/3.3 V DC	Clamping signal
	12	GND	-	-	Ground
	13	CCDCLK1	O	0/3.3 V DC(pulse)	Clock signal
	14	GND	-	-	Ground
	15	OS1(B)	I	Analog	CCD Image output signal(B)
	16	GND	-	-	Ground
	17	OS2(G)	I	Analog	CCD Image output signal(G)
	18	GND	-	-	Ground
	19	OS3(R)	I	Analog	CCD Image output signal(R)
YC115	1	DEEPSLEEP N	O	0/3.3 V DC	Sleep signal: On/Off
Connected to power source PWB	2	GND	-	-	Ground
	3	GND	-	-	Ground
	4	GND	-	-	Ground
	5	GND	-	-	Ground
	6	GND	-	-	Ground
	7	GND	-	-	Ground
	8	GND	-	-	Ground
	9	5V2	I	5 V DC	5 V DC power input from PSPWB
	10	5V2	I	5 V DC	5 V DC power input from PSPWB
	11	5V2	I	5 V DC	5 V DC power input from PSPWB
	12	5V2	I	5 V DC	5 V DC power input from PSPWB
	13	5V2	I	5 V DC	5 V DC power input from PSPWB
	14	5V2	I	5 V DC	5 V DC power input from PSPWB
	15	5V2	I	5 V DC	5 V DC power input from PSPWB

Connector	Pin	Signal	I/O	Voltage	Description
YC118	1	AUTODOWN	O	0/3.3 V DC	Auto down signal
Connected to power source PWB sub	2	GND	-	-	Ground
	3	5V0	I	5 V DC	5 V DC power input from PSPWB-S
YC41	1	+24V1	O	24 V DC	24 V DC power output to CONFM
Connected to controller fan motor	2	CONTFANDRN	O	0/24 V DC	CONFM: On/Off
	3	N.C.	-	-	Not used

2-3-2 Engine PWB

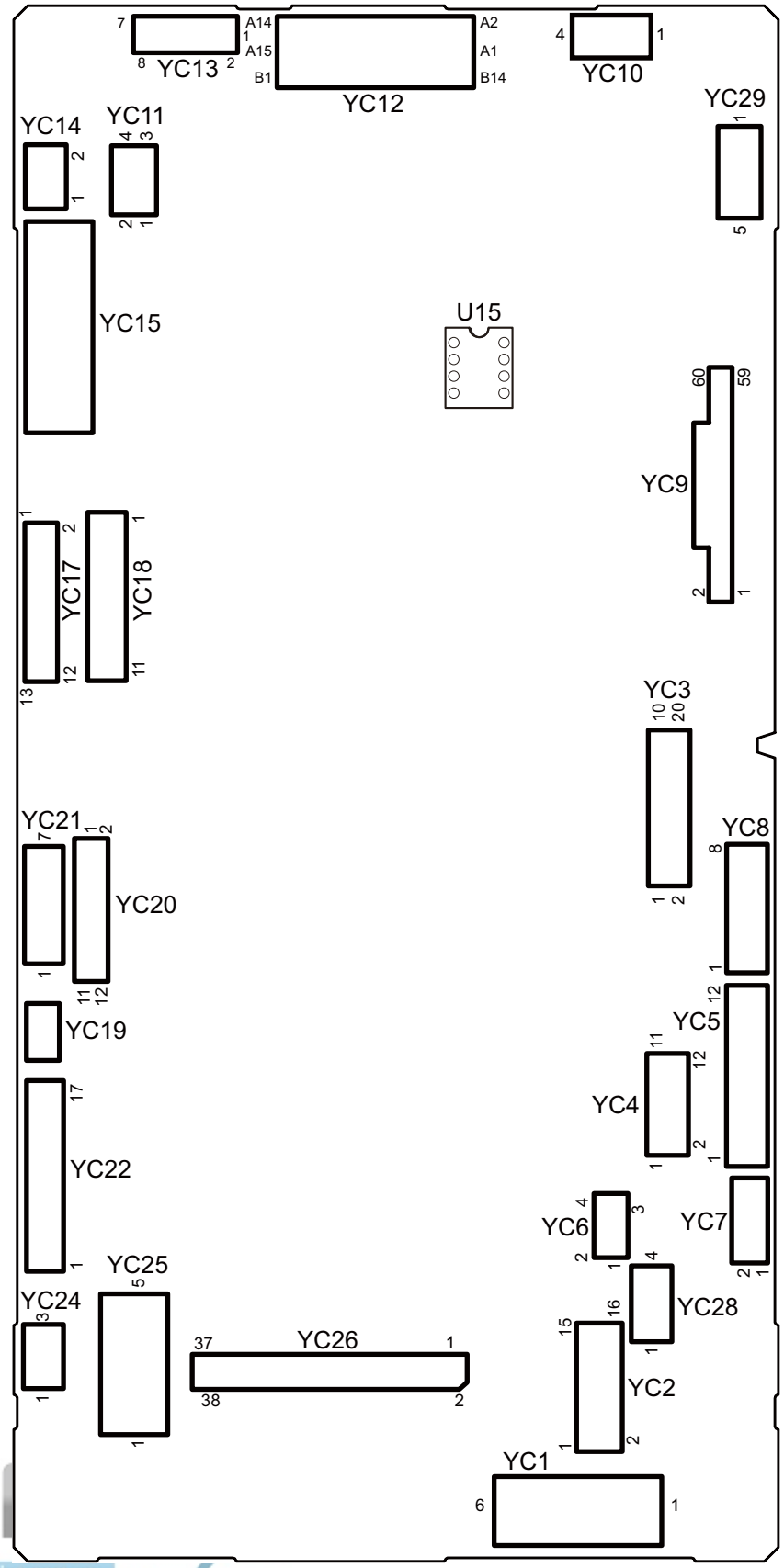

Figure 2-3-2 Engine PWB silk-screen diagram

Connector	Pin	Signal	I/O	Voltage	Description
YC1	1	GND	-	-	GROUND
Connected to power source PWB	2	GND	-	-	GROUND
	3	GND	-	-	GROUND
	4	24V2	O	24 V DC	24 V DC power input from PSPWB
	5	24V2	O	24 V DC	24 V DC power input from PSPWB
	6	24V2	O	24 V DC	24 V DC power input from PSPWB
YC2	1	24V4	O	24 V DC	24 V DC power output to MPSOL
Connected to MP solenoid, duplex clutch, regis-tration clutch, mid clutch, feed clutch, conveying motor	2	MPF_SOL_REM	O	0/24 V DC	MPSOL: On/Off
	3	DU_CL_REM	O	0/24 V DC	DUCL: On/Off
	4	24V4	O	24 V DC	24 V DC power output to DUCL
	5	REG_CL_REM	O	0/24 V DC	RCL: On/Off
	6	24V4	O	24 V DC	24 V DC power output to RCL
	7	MID_CL_REM	O	0/24 V DC	MCL: On/Off
	8	24V4	O	24 V DC	24 V DC power output to MCL
	9	CAS_CL_REM	O	0/24 V DC	PFCL: On/Off
	10	24V4	O	24 V DC	24 V DC power output to PFCL
	11	FEED_MT_DIR	O	0/5 V DC	CM drive shift signal
	12	FEED_MT_RDY	I	0/3.3 V DC	CM ready signal
	13	FEED_MT_CLK	O	0/5 V DC (pulse)	CM clock signal
	14	FEED_MT_REM	O	0/5 V DC	CM: On/Off
	15	GND	-	-	GROUND
	16	24VIL	O	24 V DC	24 V DC power output to CM

Connector	Pin	Signal	I/O	Voltage	Description
YC3	1	DLPC_MT_DIR	O	0/5V DC	DEVM-YCM drive shift signal
Connected to developer motor YCM, developer stop clutch, drum motor YCM, drum motor K	2	DLPC_MT_RDY	I	0/3.3 V DC	DEVM-YCM ready signal
	3	DLPC_MT_CLK	O	0/5 V DC (pulse)	DEVM-YCM clock signal
	4	DLPC_MT_REM	O	0/5 V DC	DEVM-YCM: On/Off
	5	GND	-	-	GROUND
	6	24V4	O	24 V DC	24 V DC power output to DEVM-YCM
	7	24V4	O	24 V DC	24 V DC power output to DEVSCL
	8	DLP_CL_REM	O	0/3.3 V DC	DEVSCL: On/Off
	9	DRMC_MT_DIR	O	0/5 V DC	DRM-YCM drive shift signal
	10	DRMC_MT_RDY	I	0/3.3 V DC	DRM-YCM ready signal
	11	DRMC_MT_CLK	O	0/5 V DC (pulse)	DRM-YCM clock signal
	12	DRMC_MT_REM	O	0/5 V DC	DRM-YCM: On/Off
	13	GND	-	-	GROUND
	14	24VIL	O	24 V DC	24 V DC power output to DRM-YCM
	15	DRMK_MT_DIR	O	0/5 V DC	DRM-K drive shift signal
	16	DRMK_MT_RDY	I	0/3.3 V DC	DRM-K ready signal
	17	DRMK_MT_CLK	O	0/5 V DC (pulse)	DRM-K clock signal
	18	DRMK_MT_REM	O	0/5 V DC	DRM-K: On/Off
	19	GND	-	-	GROUND
	20	24VIL	O	24 V DC	24 V DC power output to DRM-K

Connector	Pin	Signal	I/O	Voltage	Description
YC4	1	DLPK_MT_DIR	O	0/5 V DC	DEVM-K drive shift signal
Connected to developer motor K, fuser motor	2	DLPK_MT_RDY	I	0/3.3 V DC	DEVM-K ready signal
	3	DLPK_MT_CLK	O	0/5 V DC (pulse)	DEVM-K clock signal
	4	DLPK_MT_REM	O	0/5 V DC	DEVM-K: On/Off
	5	GND	-	-	GROUND
	6	24VIL	O	24 V DC	24 V DC power output to DEVM-K
	7	FUSER_MT_DIR	O	0/5 V DC	FUM drive shift signal
	8	FUSER_MT_RDY	I	0/3.3 V DC	FUM ready signal
	9	FUSER_MT_CLK	O	0/5 V DC (pulse)	FUM clock signal
	10	FUSER_MT_REM	O	0/5 V DC	FUM: On/Off
	11	GND	-	-	GROUND
	12	24VIL	O	24 V DC	24 V DC power output to FUM
YC5	1	3.3V4	O	3.3 V DC	3.3 V DC power output to DUS
Connected to duplex sensor, MP paper sensor, feed sensor	2	GND	-	-	GROUND
	3	DUSW	I	0/3.3 V DC	DUS: On/Off
	4	GND	-	-	GROUND
	5	ROOP	-	-	FUPS: On/Off
	6	5V4	-	5 V DC	5 V DC power output to FUPS
	7	3.3V0	O	3.3 V DC	3.3 V DC power output to MPPS
	8	GND	-	-	GROUND
	9	MPF_SENSE	I	0/3.3 V DC	MPPS: On/Off
	10	3.3V4	O	3.3 V DC	3.3 V DC power output to FS
	11	GND	-	-	GROUND
	12	FEEDSW	I	0/3.3 V DC	FS: On/Off
YC6	1	SUB_SCL	O	3.3 V DC	Clock signal
Connected to sub PWB	2	SUB_SDA	I/O	3.3 V DC	Data signal
	3	GND	-	-	GROUND
	4	3.3V4	O	3.3 V DC	3.3 V DC power output to SPW

Connector	Pin	Signal	I/O	Voltage	Description
YC7	1	RXD	I	3.3 V DC	Data input
Connected to IH PWB	2	TXD	O	3.3 V DC	Data output
	3	ROTATION	O	3.3 V DC	Rotation detection
	4	IH_REM	O	3.3 V DC	Heater remote
	5	3.3V4			
	6	GND			
YC8	1	24V4	O	24 V DC	24 V DC power output to TM-Y
Connected to toner motor Y/C/M/K	2	TNMYDRN	O	0/24 V DC	TM-Y: On/Off
	3	24V4	O	24 V DC	24 V DC power output to TM-C
	4	TNMCDRN	O	0/24 V DC	TM-C: On/Off
	5	24V4	O	24 V DC	24 V DC power output to TM-M
	6	TNMMDRN	O	0/24 V DC	TM-M: On/Off
	7	24V4	O	24 V DC	24 V DC power output to TM-K
	8	TNMKDRN	O	0/24 V DC	TM-K: On/Off
YC9	1	GND	-	-	GROUND
Connected to engine con-nect PWB	2	GND	-	-	GROUND
	3	GND	-	-	GROUND
	4	ID2S	I	Analog	IDS2 detection signal
	5	ID2P	I	Analog	IDS2 detection signal
	6	ID1S	I	Analog	IDS1 detection signal
	7	ID1P	I	Analog	IDS1 detection signal
	8	LEDREF2	O	Analog	IDS2 control signal
	9	LEDREF1	O	Analog	IDS1 control signal
	10	RESIST	I	0/3.3 V DC	RS: On/Off
	11	NC	-	-	Not used
	12	PAPWSIZE1	I	0/3.3 V DC	PWSW: On/Off
	13	PAPLSIZE1	I	0/3.3 V DC	PLSW: On/Off
	14	PAPLSIZE2	I	0/3.3 V DC	PLSW: On/Off
	15	PAPLSIZE3	I	0/3.3 V DC	PLSW: On/Off
	16	LMOTOCP	I	0/3.3 V DC	LM detection signal
	17	LMOTRE	O	0/3.3 V DC	LM: On/Off
	18	PAPEMP2	I	0/3.3 V DC	PS2: On/Off
	19	PAPEMP1	I	0/3.3 V DC	PS1: On/Off
	20	LIFTFULL	I	0/3.3 V DC	LS: On/Off
	21	FANBHALF	O	0/3.3 V DC	FM drive shift signal
	22	FANBFULL	O	0/3.3 V DC	FM: On/Off

Connector	Pin	Signal	I/O	Voltage	Description
YC9	23	LIGHTSLEEPN	O	0/3.3 V DC	Sleep signal: On/Off
Connected to engine connect PWB	24	PFPAUSE	O	0/3.3 V DC	Paper feeder control signal
	25	PFSET	O	0/3.3 V DC	Paper feeder sleep return signal
	26	DFSET	O	0/3.3 V DC	Finisher set signal
	27	DFSEL	O	0/3.3 V DC	Finisher selection signal
	28	BRSEL	O	0/3.3 V DC	Bridge selection signal
	29	PFSEL	O	0/3.3 V DC	Paper feed selection signal
	30	EHRDY	I	0/3.3 V DC	Ready signal
	31	EHSO	O	0/3.3 V DC (pulse)	Serial communication data signal
	32	EHSI	I	0/3.3 V DC (pulse)	Serial communication data signal
	33	EHCLK	O	0/3.3 V DC (pulse)	Clock signal
	34	FANCHALF	O	0/3.3 V DC	FM drive shift signal
	35	FANCFULL	O	0/3.3 V DC	FM: On/Off
	36	NC	-	-	Not used
	37	ERASER_REM(K)	O	0/24 V DC	CL-K: On/Off
	38	DLP_TH	I	Analog	DEVTH detection voltege
	39	TCSENSE(K)	I	0/3.3 V DC	TS-K: On/Off
	40	TCSENSE(M)	I	0/3.3 V DC	TS-M: On/Off
	41	TCSENSE(C)	I	0/3.3 V DC	TS-C: On/Off
	42	ERASER_REM(COL)	O	0/3.3 V DC	CL-YCM: On/Off
	43	TCSENSE(Y)	I	0/3.3 V DC	TS-Y: On/Off
	44	GND	-	-	GROUND
	45	SDAC		0/3.3 V DC	Data
	46	GND	-	-	GROUND
	47	SCLC		0/3.3 V DC	Clock signal
	48	GND	-	-	GROUND
	49	SDAA		0/3.3 V DC	Data
	50	GND	-	-	GROUND
	51	SCLA		0/3.3 V DC	Clock signal
	52	GND	-	-	GROUND
	53	BLTHP2	I	0/3.3 V DC	BDS2: On/Off
	54	BLTHP1	I	0/3.3 V DC	BDS1: On/Off
	55	WTCFULLIN	I	Analog	WTDS detection voltage
	56	WTCFULLOUT	O	0/3.3 V DC	WTDS: On/Off

Connector	Pin	Signal	I/O	Voltage	Description
YC9	57	IDCLHP	I	0/3.3 V DC	IDS: On/Off
Connected to engine con-nect PWB	58	3.3V0	O	3.3 V DC	3.3 V DC power output to ECPWB
	59	3.3V4	O	3.3 V DC	3.3 V DC power output to ECPWB
	60	3.3V4	O	3.3 V DC	3.3 V DC power output to ECPWB
YC10	1	IDMOTA	O	24 V DC	IDSM: On/Off
Connected to engine con-nect PWB	2	IDMOTB	O	24 V DC	IDSM: On/Off
	3	BLTREMA	O	24 V DC	TCBM: On/Off
	4	BLTREMB	O	24 V DC	TCBM: On/Off
YC11	1	3.3V4	O	3.3 V DC	3.3 V DC power output to RFPWB
Connected to RFID PWB	2	RFID_SCL	O	0/3.3 V DC (pulse)	RFPWB EEPROM clock signal
	3	RFID_SDA	I/O	0/3.3 V DC (pulse)	RFPWB EEPROM data signal
	4	GND	-	-	GROUND
YC12	B1	LSUMOTB	O	0/24 V DC	LSUCM: Forward/Stop (Forward)
Connected to LSU connect PWB	B2	LSUMOTA	O	0/24 V DC	LSUCM: Forward/Stop (Reverse)
	B3	MP(K)_REM	O	0/3.3 V DC	PM: On/Off
	B4	24V4	O	24 V DC	24 V DC power output to PM
	B5	MP(K)_RDY	I	0/3.3 V DC	PM ready signal
	B6	MP(M)_REM	O	0/3.3 V DC	PM: On/Off
	B7	MP(C)_REM	O	0/3.3 V DC	PM: On/Off
	B8	MP(C)_RDY	I	0/3.3 V DC	PM ready signal
	B9	VCONT(K)	O	Analog	APCPWB laser power standard voltage
	B10	MP(Y)_RDY	I	0/3.3 V DC	PM ready signal
	B11	VCONT(M)	O	Analog	APCPWB laser power standard voltage
	B12	LSU_TH(Y)	I	Analog	LSU thermistor signal
	B13	VCONT(Y)	O	Analog	APCPWB laser power standard voltage
	B14	GND	-	-	GROUND
	B15	VCONT(C)	O	Analog	APCPWB laser power standard voltage
	A1	3.3VIL	O	3.3 V DC	3.3 V DC power output to BDPWB
	A2	GND	-	-	GROUND
	A3	LSU_TH(K)	I	Analog	LSU thermistor signal
	A4	EN(K)	O	0/3.3 V DC	APCPWB laser enable signal
	A5	EN?COL)	O	0/3.3 V DC	APCPWB laser enable signal
	A6	MP(Y)_CLK	O	0/3.3 V DC (pulse)	PM clock signal
	A7	MP(Y)_REM	O	0/3.3 V DC	PM: On/Off

Connector	Pin	Signal	I/O	Voltage	Description
YC12	A8	MP(C)_CLK	O	0/3.3 V DC (pulse)	PM clock signal
Connected to LSU connect PWB	A9	MP(M)_RDY	I	0/3.3 V DC	PM ready signal
	A10	MP(M)_CLK	O	0/3.3 V DC (pulse)	PM clock signal
	A11	MP(K)_CLK	O	0/3.3 V DC (pulse)	PM clock signal
	A12	GND	-	-	GROUND
	A13	24V4	O	24 V DC	24 V DC power output to PM
	A14	GND	-	-	GROUND
	A15	24V4	O	24 V DC	24 V DC power output to PM
YC13	1	GND	-	-	GROUND
Connected to high voltage PWB sub	2	T1KCNT	O	PWM	Primary transfer bias control voltage (Black)
	3	T1MCNT	O	PWM	Primary transfer bias control voltage (Magenta)
	4	CLCNT	O	PWM	Cleaning bias control signal
	5	HVREM	O	0/3.3 V DC (pulse)	Transfer bias remote signal
	6	T1YCNT	O	PWM	Primary transfer bias control voltage (Yellow)
	7	T1CCNT	O	PWM	Primary transfer bias control voltage (Cyan)
	8	24VIL	O	24 V DC	24 V DC power output to HVPWB-S
YC14	1	BRSET	I	0/3.3 V DC	BRDSW: On/Off
Connected to bridge detection switch	2	GND	-	-	GROUND
YC15	B1	GND	-	-	GROUND
Connected to high voltage PWB	B2	GND	-	-	GROUND
	B3	SCNT	O	PWM	Separation control signal
	B4	T2CNT	O	PWM	Secondary transfer bias control voltage
	B5	MISENS	I	Analog	Chager roller AC current signal
	B6	HVREM	O	0/3.3 V DC (pulse)	Developing bias remote signal
	B7	BKSCNT	O	PWM	Developing sleeve roller bias control voltage (Black)
	B8	BMMCNT	O	PWM	Developing magnet roller bias control voltage (Magenta)
	B9	BKMCNT	O	PWM	Developing magnet roller bias control voltage (Black)
	B10	BMSCNT	O	PWM	Developing sleeve roller bias control voltage (Magenta)

Connector	Pin	Signal	I/O	Voltage	Description
YC15	B11	MKCNT	O	PWM	Chager roller control voltage (Black)
Connected to high voltage PWB	B12	MMCNT	O	PWM	Chager roller control voltage (Magenta)
	B13	BKBACCNT	O	PWM	Developing AC bias control voltage (Black)
	B14	HVCLKK	O	0/3.3 V DC (pulse)	Developing bias clock signal (Black)
	B15	HVCLKM	O	0/3.3 V DC (pulse)	Developing bias clock signal (Magenta)
	B16	24VIL	O	24 V DC	24 V DC power output to HVPWB
	B17	24VIL	O	24 V DC	24 V DC power output to HVPWB
	A1	CBACCNT	O	PWM	Developing AC bias control voltage (Cyan)
	A2	MBACCNT	O	PWM	Developing AC bias control voltage (Magenta)
	A3	MCCNT	O	PWM	Chager roller control voltage (Cyan)
	A4	HVCLKC	O	0/3.3 V DC (pulse)	Developing bias clock signal (Cyan)
	A5	BCSCNT	O	PWM	Developing sleeve roller bias control voltage (Cyan)
	A6	BYMCNT	O	PWM	Developing magnet roller bias control voltage (Yellow)
	A7	BCMCNT	O	PWM	Developing magnet roller bias control voltage (Cyan)
	A8	BYSCNT	O	PWM	Developing sleeve roller bias control voltage (Yellow)
	A9	MYCNT	O	PWM	Chager roller control voltage (Yellow)
	A10	YBACCNT	O	PWM	Developing AC bias control voltage (Yellow)
	A11	HVCLKY	O	0/3.3 V DC (pluse)	Developing bias clock signal (Yellow)
	A12	NC	-	-	Not used
	A13	NC	-	-	Not used
	A14	NC	-	-	Not used
	A15	NC	-	-	Not used
	A16	NC	-	-	Not used
	A17	NC	-	-	Not used

Connector	Pin	Signal	I/O	Voltage	Description
YC17	1	SCANNER B1	O	0/24 V DC	ISUM drive controll signal
Connected to ISU motor, home position sensor, original detection switch, original size sensor	2	SCANNER A2	O	0/24 V DC	ISUM drive controll signal
	3	SCANNER B2	O	0/24 V DC	ISUM drive controll signal
	4	SCANNER A1	O	0/24 V DC	ISUM drive controll signal
	5	3.3V4	O	3.3 V DC	3.3 V DC power output to HPS
	6	GND	-	-	GROUND
	7	SCA_HP	I	0/3.3 V DC	HPS: On/Off
	8	3.3V4	O	3.3 V DC	3.3 V DC power output to ODSW
	9	GND	-	-	GROUND
	10	SCA_COVER	I	0/3.3 V DC	ODSW: On/Off
	11	GND	-	-	GROUND
	12	SCA_SIZE	I	0/3.3 V DC	OSS: On/Off
	13	5V4	O	5 V DC	5 V DC power output to OSS
YC18	1	GND	-	-	GROUND
Connected to document processor	2	GND	-	-	GROUND
	3	24V4	O	24 V DC	24 V DC power output to DP
	4	24V4	O	24 V DC	24 V DC power output to DP
	5	DP_CLK	O	0/3.3 V DC (pulse)	DP clock signal
	6	DP_SO	O	0/3.3 V DC (pulse)	Serial communication data signal
	7	DP_SEL	O	0/3.3 V DC	DP select signal
	8	DP_SI	I	0/3.3 V DC (pulse)	Serial communication data signal
	9	DP_RDY	I	0/3.3 V DC	DP ready signal
	10	DP_TMG	I	0/3.3 V DC	DPTS: On/Off
	11	DP_OPEN	I	0/3.3 V DC	DPOCS: On/Off
YC19	1	GND	-	-	GROUND
Connected to IH PWB	2	RELAY	O	3.3 V DC	Relay remote
	3	24V4	O	24 V DC	24 V DC power output to IHPWB
YC20	1	EJE_SOL_RETURN	O	0/24 V DC	FSSOL: On/Off
Connected to shift solenoid, eject motor, paper full sensor, job paper full sensor	2	24V4	O	24 V DC	24 V DC power output to FSSOL
	3	EJECT_/B	O	0/24 V DC (pluse)	EM drive control signal
	4	EJECT_/A	O	0/24 V DC (pluse)	EM drive control signal
	5	EJECT_B	O	0/24 V DC (pluse)	EM drive control signal
	6	EJECT_A	O	0/24 V DC (pluse)	EM drive control signal
	7	3.3V4	O	3.3 V DC	3.3 V DC power output to PFS
	8	GND	-	-	GROUND

Connector	Pin	Signal	I/O	Voltage	Description
YC20	9	EJE_FULL_UP	I	0/3.3 V DC	PFS: On/Off
Connected to shift sole-noid, eject motor, paper full sensor, job paper full sensor	10	3.3V4	O	3.3 V DC	3.3 V DC power output to JEPS
	11	GND	-	-	GROUND
	12	EJE_FULL_DWN	I	0/3.3 V DC	JEPS: On/Off
YC21	1	IH_FAN2_REM	O	0/24 V DC	IHCFM: On/Off
Connected to IH coil fan motor, devel-oper fan motor, con-tainer fan motor	2	GND	-	-	GROUND
	3	IH_FAN2_ALM	I	0/3.3 V DC	IHCFM alarm signal
	4	DLP_FAN_REM	O	0/24 V DC	DEVFM: On/Off
	5	GND	-	-	GROUND
	6	CON_FAN_REM	O	0/24 V DC	TCFM: On/Off
	7	GND	-	-	GROUND
YC22	1	FUSREMA	O	0/24 V DC	PRM: On/Off
Connected to thermistor1, thermistor2, eject sensor, fuser press release motor	2	FUSREMB	O	24 V DC	3.3 V DC power output to PRM
	3	3.3V4	O	3.3 V DC	3.3 V DC power output to ES
	4	GND	-	-	GROUND
	5	FUSER_JAM	I	0/3.3 V DC	ES: On/Off
	6	3.3V4	-	-	Not used
	7	GND	-	-	Not used
	8	FUSER_PRE	-	-	Not used
	9	SUBSDA	I/O	3.3 V DC	Data
	10	SUBSCL	O	3.3 V DC	Clock
	11	PR_TH	I	Analog	FTH detection voltage (Press roller)
	12	HR_NCTH1	I	Analog	FTH detection voltage (Center)
	13	HR_NCTH2	I	Analog	FTH detection voltage (Center)
	14	3.3V4	O	3.3 V DC	3.3 V DC power output to FTH
	15	EG_TH	I	Analog	FTH detection voltage (Edge)
	16	GND	-	-	GROUND
	17	ROTATION	I	3.3 V DC	Rotation detection

Connector	Pin	Signal	I/O	Voltage	Description
YC24	1	IH_FAN1_REM	O	0/24 V DC	IHFM: On/Off
Connected to IH fan motor	2	GND	-	-	GROUND
	3	IH_FAN1_ALM	I	0/3.3 V DC	IHFM alarm signal
YC25	1	24VIL2	I	24 V DC	24 V DC power input from RCSW
Connected to right cover switch, front cover switch	2	24VIL1	O	24 V DC	24 V DC power output to RCSW
	3	24VIL1	O	24 V DC	24 V DC power output to FCSW
	4	24V4	I	24 V DC	24 V DC power input from FCSW
	5	3.3V0	O	3.3 V DC	3.3 V DC power output to FCSW
YC26	1	BDY	O	0/3.3 V DC (pulse)	Horizontal synchronizing signal (Yellow)
Connected to main PWB	2	BDC	O	0/3.3 V DC (pulse)	Horizontal synchronizing signal (Cyan)
	3	BDM	O	0/3.3 V DC (pulse)	Horizontal synchronizing signal (Magenta)
	4	BDBK	O	0/3.3 V DC (pulse)	Horizontal synchronizing signal (Black)
	5	NC	-	-	Not used
	6	EME_IRN	O	0/3.3 V DC	Interruption signal
	7	EME_DIR	O	0/3.3 V DC	Communication direction change signal
	8	EME_BSY	O	0/3.3 V DC	Busy signal
	9	EME_SO	I	0/3.3 V DC (pulse)	Serial communication data signal input
	10	EME_SI	O	0/3.3 V DC (pulse)	Serial communication data signal output
	11	EME_CLK	I	0/3.3 V DC (pulse)	Clock signal
	12	PAGEST	O	0/3.3 V DC	Sub-scanning standard signal
	13	OVSYNCMON	I	0/3.3 V DC	Sub-scanning monitor signal
	14	PVSYNC	O	0/3.3 V DC (pulse)	Vertical synchronizing signal
	15	AQUA_RDY	I	0/3.3 V DC	Ready signal
	16	AQUA_SEL	O	0/3.3 V DC	Select signal
	17	AQUA_SO	I	0/3.3 V DC (pulse)	Serial communication data signal input
	18	AQUA_SI	O	0/3.3 V DC (pulse)	Serial communication data signal output
	19	AQUA_CLK	O	0/3.3 V DC (pulse)	Clock signal
	20	HYP_INT	I	0/3.3 V DC	Interruption signal
	21	HYP_SDA	O	0/3.3 V DC (pulse)	Data signal
	22	HYP_SCL	O	0/3.3 V DC (pulse)	Clock signal
	23	GND	-	-	GROUND
	24	GND	-	-	GROUND
	25	GND	-	-	GROUND
	26	GND	-	-	GROUND

Connector	Pin	Signal	I/O	Voltage	Description
YC26	27	GND	-	-	GROUND
Connected to main PWB	28	24VDOWN	I	24 V DC	24 V DC down signal
	29	3.3V4	O	0/3.3 V DC	3.3 V DC power output to MPWB
	30	3.3V4	O	0/3.3 V DC	3.3 V DC power output to MPWB
	31	3.3V0	O	0/3.3 V DC	3.3 V DC power output to MPWB
	32	5V4	O	5 V DC	5 V DC power output to MPWB
	33	24V4	O	24 V DC	24 V DC power output to MPWB
	34	24V4	O	24 V DC	24 V DC power output to MPWB
	35	LIGHT_SLEEPN	I	0/3.3 V DC	Light sleep shift signal
	36	SCAN_HLD	I	0/3.3 V DC	Scan hold signal
	37	ENG_HLD	I	0/3.3 V DC	Engine hold signal
	38	SLEEPOFF	O	0/3.3 V DC	Sleep return signal
YC28	1	FUSER_FAN_REM	O	0/24 V DC	FUFM1: On/Off
Connected to fuser fan motor	2	GND	-	-	GROUND
	3	FUSER_FAN_REM	O	0/24 V DC	FUFM2: On/Off
	4	GND	-	-	GROUND
YC29	1	GND	-	-	GROUND
Connected to temperature sensor	2	TMPDATA	I	Analog	TEMS detection voltage (Temperature)
	3	WETCLK0	O	0/3.3 V DC (pulse)	TEMS clock signal
	4	WETCLK1	O	0/3.3 V DC (pulse)	TEMS clock signal
	5	HUMDATA	I	Analog	TEMS detection voltage (Humidity)

2-3-3 Power source PWB

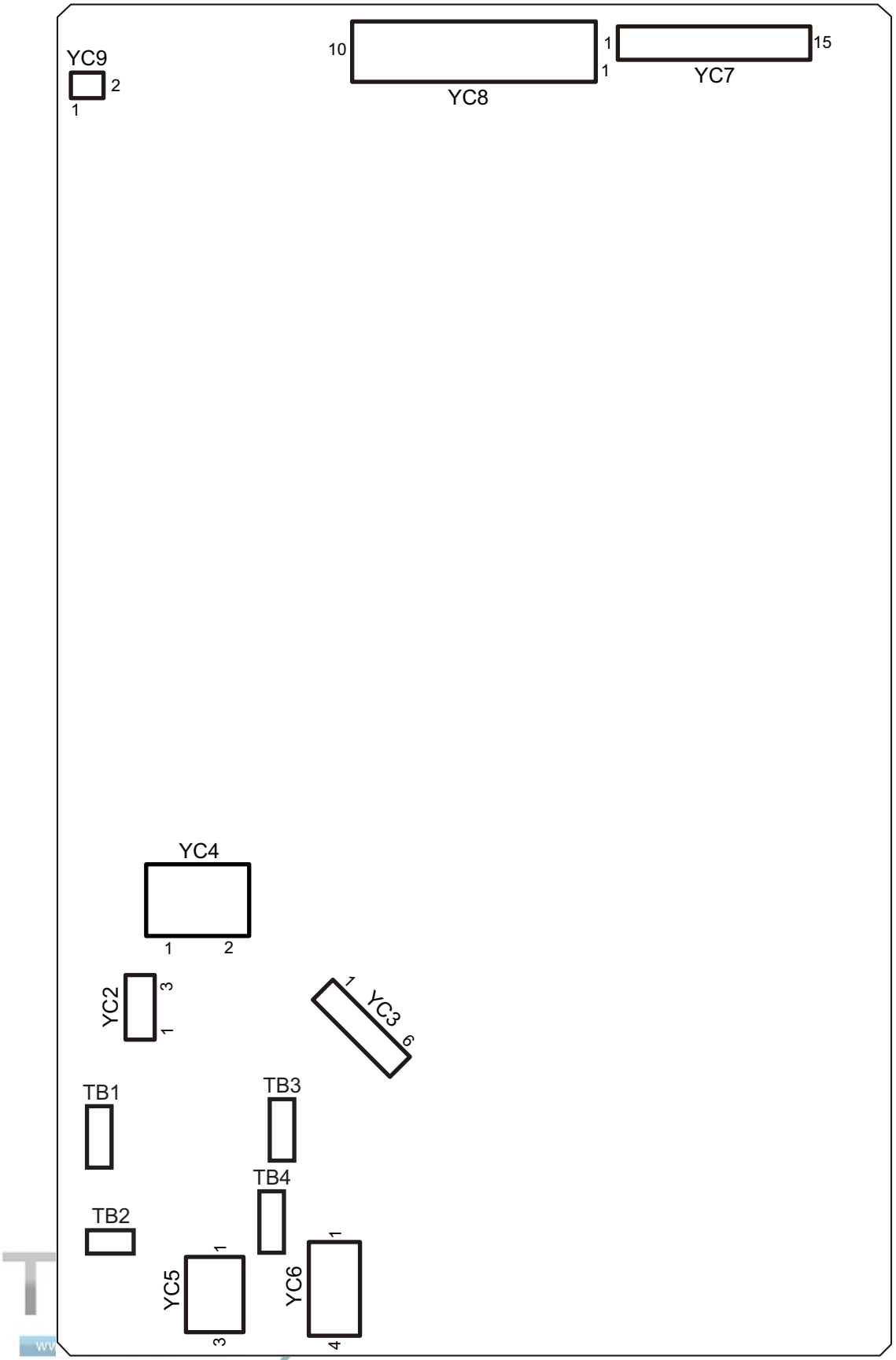

Figure 2-3-3 Main PWB silk-screen diagram

Connector	Pin	Signal	I/O	Voltage	Description
TB	TB1	LIVE	I	100 V AC	AC power input
Connected to AC inlet, main switch	TB2	NEUTRAL	I	100 V AC	AC power input
	TB3	LIVE(SW)	O	100 V AC	AC power output to MSW
	TB4	LIVE(SW)	I	100 V AC	AC power input from MSW
YC2	1	CH_SW IN	O	100 V AC	AC power output to CHSW
Connected to cassette heater switch	2	NC	-	-	Not used
	3	CH_SW OUT	I	100 V AC	AC power input from CHSW
YC3	1	LIVE	O	100 V AC	AC power output to PFCH
Connected to paper feeder, cassette heater	2	LIVE	O	100 V AC	AC power output to CH
	3	NC	-	-	Not used
	4	NC	-	-	Not used
	5	NEUTRAL	O	100 V AC	AC power output to PFCH
	6	NEUTRAL	O	100 V AC	AC power output to CH
YC4	1	LIVE	O	100 V AC	AC power output to IHPWB
Connected to IH PWB	2	NEUTRAL	O	100 V AC	AC power output to IHPWB
YC5	1	LIVE	O	100 V AC	AC power output to PSPWB-S
Connected to power source PWB sub	2	NC	-	-	Not used
	3	NEUTRAL	O	100 V AC	AC power output to PSPWB-S
YC6	1	LIVE	O	100 V AC	Option AC power output
Connected to AC outlet	2	NC	-	-	Not used
	3	NC	-	-	Not used
	4	NEUTRAL	O	100 V AC	Option AC power output

Connector	Pin	Signal	I/O	Voltage	Description
YC7	1	+5V2	O	5 V DC	5 V DC power output to MPWB
Connected to main PWB	2	+5V2	O	5 V DC	5 V DC power output to MPWB
	3	+5V2	O	5 V DC	5 V DC power output to MPWB
	4	+5V2	O	5 V DC	5 V DC power output to MPWB
	5	+5V2	O	5 V DC	5 V DC power output to MPWB
	6	+5V2	O	5 V DC	5 V DC power output to MPWB
	7	+5V2	O	5 V DC	5 V DC power output to MPWB
	8	GND	-	-	GROUND
	9	GND	-	-	GROUND
	10	GND	-	-	GROUND
	11	GND	-	-	GROUND
	12	GND	-	-	GROUND
	13	GND	-	-	GROUND
	14	GND	-	-	GROUND
	15	SLEEP1	I	0/3.3 V DC	Sleep 1 control signal: On/Off
YC8	1	+24V2	O	24 V DC	24 V DC power output to ECPWB
Connected to engine PWB, engine connect PWB	2	+24V2	O	24 V DC	24 V DC power output to ECPWB
	3	GND	-	-	GROUND
	4	GND	-	-	GROUND
	5	GND	-	-	GROUND
	6	GND	-	-	GROUND
	7	GND	-	-	GROUND
	8	+24V2	O	24 V DC	24 V DC power output to EPWB
	9	+24V2	O	24 V DC	24 V DC power output to EPWB
	10	+24V2	O	24 V DC	24 V DC power output to EPWB
YC9	1	NC	-	-	Not used
Connected to engine connect PWB	2	SLEEP2	I	0/3.3 V DC	Sleep 2 control signal: On/Off

2-3-4 IH PWB

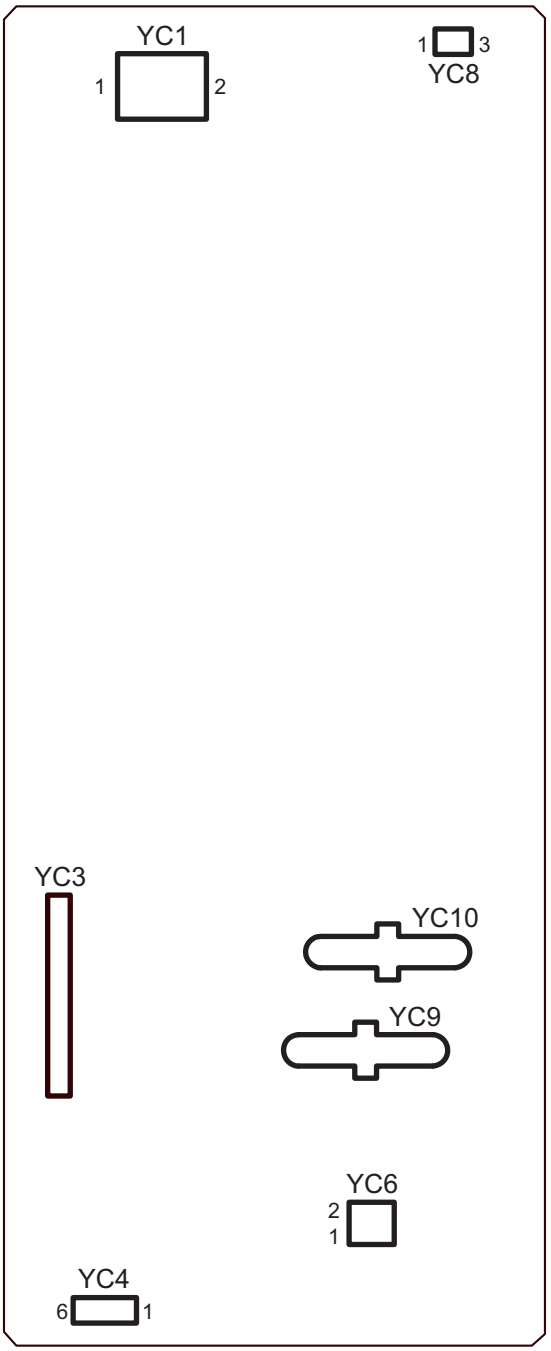

Figure 2-3-4 IH PWB silk-screen diagram

Connector	Pin	Signal	I/O	Voltage	Description
YC1	1	IH_NEUTRAL	I	220 V AC	AC power input
Connected to power source PWB	2	IH_LIVE	I	220 V AC	AC power input
YC3	1	TH2	-	Analog	Low side IGBT case temperature
Connected to IH control PWB	2	TH1	-	Analog	High side IGBT case temperature
	3	AC_CURRENT	-	Analog	AC input current
	4	AC_VOLTAGE	-	Analog	AC input voltage
	5	OUT_CURRENT	-	Analog	Output current
	6	IH_REM	-	0/5 V DC	IH: On/off
	7	ROTATION	-	0/5 V DC	TCBM control signal
	8	RXD	-	0/5 V DC (pulse)	Serial communication data signal input
	9	TXD	-	0/5 V DC (pulse)	Serial communication data signal output
	10	S1	-	0/5 V DC	For soft distinction
	11	IGBT1	-	0/5 V DC	gate output
	12	IGBT2	-	0/5 V DC	gate output
	13	S2	-	0/5 V DC	For soft distinction
	14	ERROR	-	0/5 V DC	Error signal
	15	5V	-	5 V DC	5 V DC power output to IHCPWB
	16	GND	-	-	Ground
YC4	1	SGND	-	-	Ground
Connected to engine PWB	2	3.3V4	I	3.3 V DC	3.3 V DC power input from EPWB
	3	IH_REM	I	0/3.3 V DC	IH: On/off
	4	ROTATION	I	0/3.3 V DC	TCBM control signal
	5	RXD	I	0/3.3 V DC (pulse)	Serial communication data signal input
	6	TXD	O	0/3.3 V DC (pulse)	Serial communication data signal output
YC6	1	+15V-1	O	15 V DC	Control power supply
Connected to thermostat	2	+15V-2	I	15 V DC	Gate drive power supply
YC8	1	24VIL	I	24 V DC	24 V DC power input from EPWB
Connected to engine PWB	2	RELAY	I	0/3.3 V DC	RSW: On/Off
	3	PGND	-	-	Ground

Connector	Pin	Signal	I/O	Voltage	Description
YC9 Connected to IH coil	1	IH_OUT1	O	390 V DC	Resonance circuit output
YC10 Connected to IH coil	1	IH_OUT2	O	1000 V DC	Resonance circuit output

CAUTION: Connectors YC1, YC3, YC6, YC9 and YC10 are not grounded, therefore, use caution not to damage the connectors during measurement of voltages.

2-3-5 Operation panel PWB main

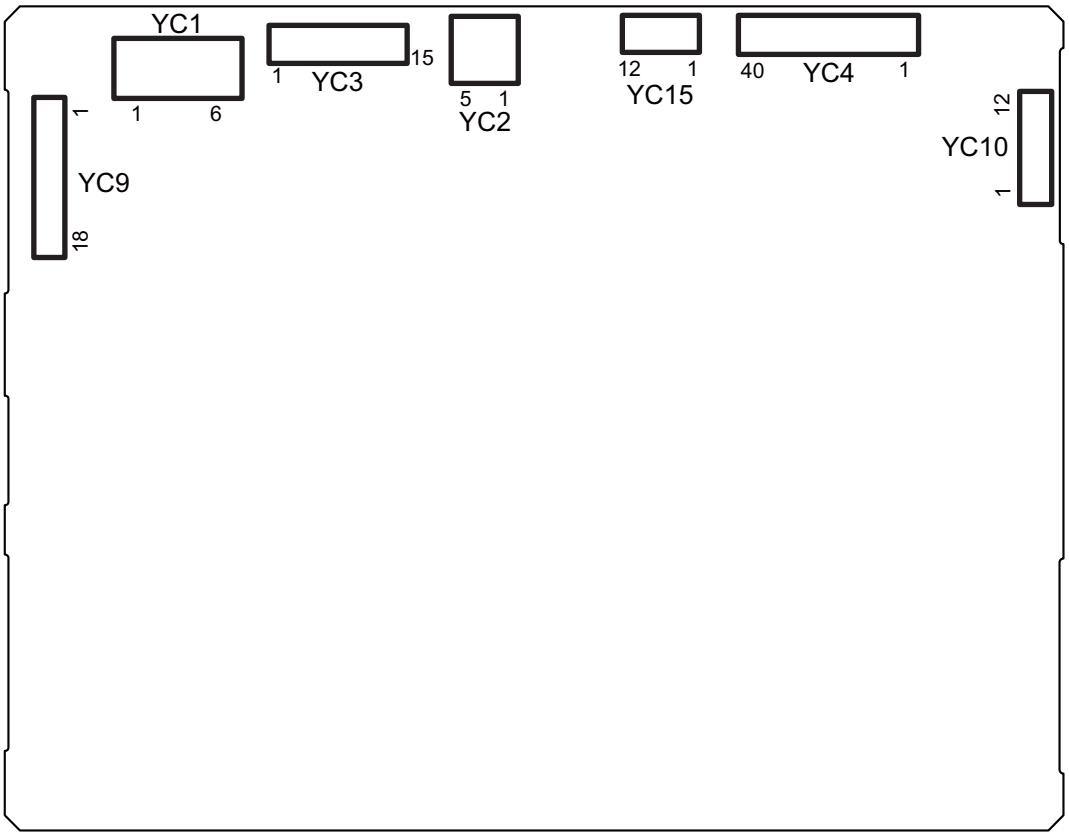

Figure 2-3-5 Operation panel PWB main silk-screen diagram

Connector	Pin	Signal	I/O	Voltage	Description
YC1	1	5V2	I	5 V DC	5 V DC power intput from MPWB
Connected to main PWB	2	5V2	I	5 V DC	5 V DC power input from MPWB
	3	GND	-	-	Ground
	4	GND	-	-	Ground
YC2	1	VBUS	I	5 V DC	5 V DC power input
Connected to main PWB	2	DN	I/O	LVDS	USB data signal
	3	DP	I/O	LVDS	USB data signal
	4	ID	-	-	Not used
	5	GND	-	-	Ground
YC3	1	GND	-	-	Ground
Connected to main PWB	2	SECOND_TRAY_S	I	0/3.3 V DC	JEPS: On/Off
	3	BEEP_POWERON	I	0/3.3 V DC	Sleep return signal 0
	4	ENERGY_SAVE	I	0/3.3 V DC	Energy save signal
	5	SUSPEND_Power	I	3.3V DC	3.3 V DC power input from MPWB
	6	LED_MEMORY	I	0/3.3 V DC	Memory LED control signal
	7	LED_ATTENTION	I	0/3.3 V DC	Attention LED control signal
	8	LED_PROCESSING	I	0/3.3 V DC	Processing LED control signal
	9	SHUTDOWN	I	0/3.3 V DC	24 V down signal
	10	LIGHTOFF_POWER	I	0/3.3 V DC	Sleep return signal 1
	11	AUDIO	I	Analog	Voice output signal
	12	PANEL_RESET	I	0/3.3 V DC	Reset signal
	13	INT_POWERKEY	O	0/3.3 V DC	Power key: On/Off
	14	PANEL_STATUS	O	0/3.3 V DC	Operation panel status signal
	15	GND	-	-	Ground

Connector	Pin	Signal	I/O	Voltage	Description
YC4	1	GND	-	-	Ground
Connected to LCD relay PWB	2	GND	-	-	Ground
	3	CK	O	0/3.3 V DC(pulse)	Clock signal
	4	GND	-	-	Ground
	5	GND	-	-	Ground
	6	SC	O	0/3.3 V DC	LCD Control signal
	7	R0	O	0/3.3 V DC	LCD Control signal
	8	R1	O	0/3.3 V DC	LCD Control signal
	9	R2	O	0/3.3 V DC	LCD Control signal
	10	GND	-	-	Ground
	11	R3	O	0/3.3 V DC	LCD Control signal
	12	R4	O	0/3.3 V DC	LCD Control signal
	13	R5	O	0/3.3 V DC	LCD Control signal
	14	GND	-	-	Ground
	15	G1	O	0/3.3 V DC	LCD Control signal
	16	G1	O	0/3.3 V DC	LCD Control signal
	17	G2	O	0/3.3 V DC	LCD Control signal
	18	GND	-	-	Ground
	19	G3	O	0/3.3 V DC	LCD Control signal
	20	G4	O	0/3.3 V DC	LCD Control signal
	21	G5	O	0/3.3 V DC	LCD Control signal
	22	GND	-	-	Ground
	23	B0	O	0/3.3 V DC	LCD Control signal
	24	B1	O	0/3.3 V DC	LCD Control signal
	25	B2	O	0/3.3 V DC	LCD Control signal
	26	GND	-	-	Ground
	27	B3	O	0/3.3 V DC	LCD Control signal
	28	B4	O	0/3.3 V DC	LCD Control signal
	29	B5	O	0/3.3 V DC	LCD Control signal
	30	GND	-	-	Ground
	31	H_SYNC	O	0/3.3 V DC(pulse)	Horizontal synchronizing signal
	32	GND	-	-	Ground
	33	V_SYNC	O	0/3.3 V DC(pulse)	Vertical synchronizing signal
	34	GND	-	-	Ground
	35	ENB	O	0/3.3 V DC	LCD enable signal
	36	CM	O	0/3.3 V DC	LCD mode switch signal
	37	3.3V	O	3.3V DC	3.3 V DC power output to LCDRPWB

Connector	Pin	Signal	I/O	Voltage	Description
YC4	38	3.3V	O	3.3 V DC	3.3 V DC power output to LCDRPWB
Connected to LCD relay PWB	39	3.3V	O	3.3 V DC	3.3 V DC power output to LCDRPWB
	40	3.3V	O	3.3 V DC	3.3 V DC power output to LCDRPWB
YC9	1	A_LED	O	0/3.3 V DC	Memory LED control signal
Connected to operation panel PWB left	2	M_LED	O	0/3.3 V DC	Attention LED control signal
	3	P_LED	O	0/3.3 V DC	Processing LED control signal
	4	KEY4	I	0/3.3 V DC(pulse)	Operation panel key scan return signal 4
	5	INT_POWER KEY_N	O	0/5 V DC	Power key: On/Off
	6	KEY3	I	0/3.3 V DC(pulse)	Operation panel key scan return signal 3
	7	KEY2	I	0/3.3 V DC(pulse)	Operation panel key scan return signal 2
	8	KEY1	I	0/3.3 V DC(pulse)	Operation panel key scan return signal 1
	9	LED1	O	0/3.3 V DC(pulse)	Operation panel LED display drive signal 1
	10	3.3V0	O	3.3V DC	3.3 V DC power output to OPPWB-L
	11	LED0	O	0/3.3 V DC(pulse)	Operation panel LED display drive signal 0
	12	KEY0	I	0/3.3 V DC(pulse)	Operation panel key scan return signal 0
	13	SCAN4	O	0/3.3 V DC(pulse)	Scan signal 4
	14	SCAN3	O	0/3.3 V DC(pulse)	Scan signal 3
	15	SCAN2	O	0/3.3 V DC(pulse)	Scan signal 2
	16	SCAN1	O	0/3.3 V DC(pulse)	Scan signal 1
	17	SCAN0	O	0/3.3 V DC(pulse)	Scan signal 0
	18	GND	-	-	Ground

Connector	Pin	Signal	I/O	Voltage	Description
YC10	1	S_LED	O	0/3.3 V DC	Memory LED control signal
Connected to operation panel PWB right	2	LED4	O	0/3.3 V DC(pulse)	Operation panel LED display drive signal 4
	3	LED2	O	0/3.3 V DC(pulse)	Operation panel LED display drive signal 2
	4	KEY5	I	0/3.3 V DC(pulse)	Operation panel key scan return signal 5
	5	SCAN3	O	0/3.3 V DC(pulse)	Scan signal 3
	6	SCAN2	O	0/3.3 V DC(pulse)	Scan signal 2
	7	SCAN1	O	0/3.3 V DC(pulse)	Scan signal 1
	8	KEY7	I	0/3.3 V DC(pulse)	Operation panel key scan return signal 7
	9	LED3	O	0/3.3 V DC(pulse)	Operation panel LED display drive signal 3
	10	KEY6	I	0/3.3 V DC(pulse)	Operation panel key scan return signal 6
	11	SCAN0	O	0/3.3 V DC(pulse)	Scan signal 0
	12	GND	-	-	Ground
YC15	1	GND	-	-	Ground
Connected to LCD relay PWB	2	SCK	O	0/3.3 V DC(pulse)	Clock signal
	3	SDI	O	0/3.3 V DC(pulse)	Serial communication data signal
	4	SPC_CS1N	O	0/3.3 V DC	LCD control signal
	5	SHUT	O	0/3.3 V DC	LCD control signal
	6	LCD_RESB	O	0/3.3 V DC	LCD control signal
	7	Y1(T)	I	Analog	Touch panel Y+Positional signal
	8	X2(L)	I	Analog	Touch panel X+Positional signal
	9	Y2(B)	I	Analog	Touch panel Y-Positional signal
	10	X1(R)	I	Analog	Touch panel X-Positional signal
	11	LED_A(+)	O	0/3.3 V DC	LED control signal
	12	LED_C(-)	I	0/3.3 V DC	LED control signal

2-3-6 DP main PWB

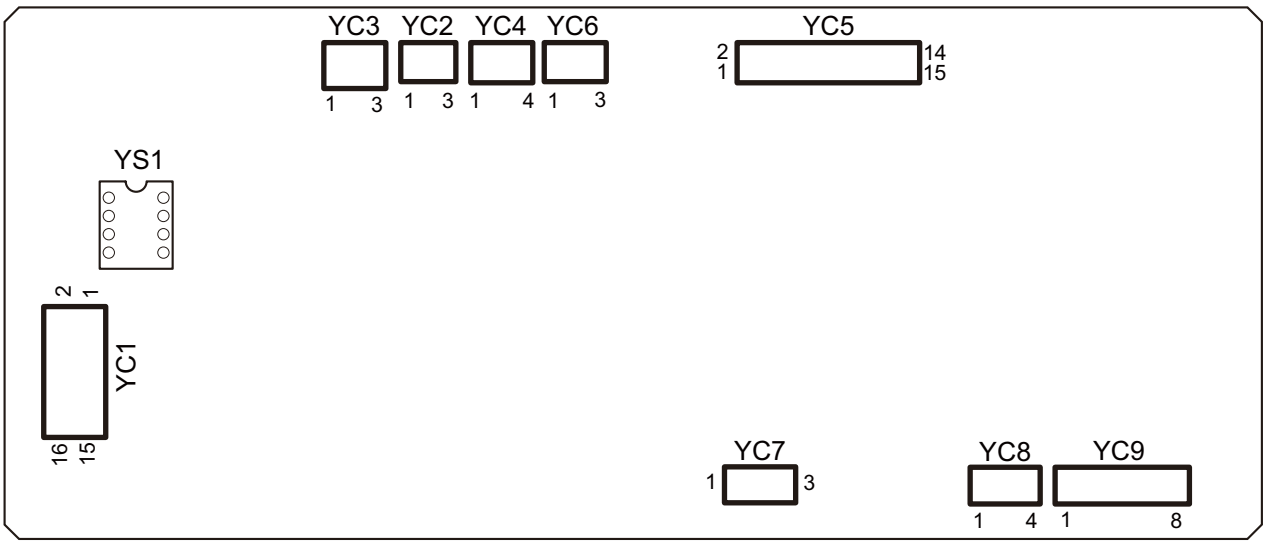

Figure 2-3-6 DP main PWB silk-screen diagram

Connector	Pin	Signal	I/O	Voltage	Description
YC1	1	FG	-	-	Ground
Connected to engine PWB	2	ENG_TMG	O	0/3.3 V DC	DPTS: On/Off
	3	ENG_RDY	O	0/3.3 V DC	Ready signal
	4	ENG_SEL	I	0/3.3 V DC	Select signal
	5	ENG_CLK	I	0/3.3 V DC(pulse)	Clock signal
	6	ENG_SI	I	0/3.3 V DC(pulse)	Serial communication data signal
	7	ENG_SO	O	0/3.3 V DC(pulse)	Serial communication data signal
	8	ENG_OPEN	O	0/3.3 V DC	DPOCS: On/Off
	9	NC	-	-	Not used
	10	GND	-	-	Ground
	11	GND	-	-	Ground
	12	GND	-	-	Ground
	13	NC	-	-	Not used
	14	+24V	O	24 V DC	24 V DC power input from EPWB
	15	+24V	O	24 V DC	24 V DC power input from EPWB
	16	+24V	O	24 V DC	24 V DC power input from EPWB
YC2	1	ANODE	O	3.3 V DC	3.3 V DC power output to DPOLS
Connected to DP original size length sensor	2	GND	-	-	Ground
	3	LS_SW	I	0/3.3 V DC	DPOLS: On/Off
YC3	1	ANODE	O	3.3 V DC	3.3 V DC power output to DPOS
Connected to DP original sensor	2	GND	-	-	Ground
	3	SET_SW	I	0/3.3 V DC	DPOS: On/Off
YC4	1	WID1	I	0/3.3 V DC	DPOWS: On/Off
Connected to DP original size width sensor	2	GND	-	-	Ground
	3	WID2	I	0/3.3 V DC	DPOWS: On/Off
	4	WID3	I	0/3.3 V DC	DPOWS: On/Off

Connector	Pin	Signal	I/O	Voltage	Description
YC5	1	ANODE	O	3.3 V DC	3.3 V DC power output to DPPFS
Connected to DP paper feed sensor,DP registration sensor,DP open/close sensor,DP switchback sensor and DP timing sensor	2	GND	-	-	Ground
	3	FEED SW	I	0/3.3 V DC	DPPFS: On/Off
	4	ANODE	O	3.3 V DC	3.3 V DC power output to DPRS
	5	GND	-	-	Ground
	6	REGIST_SW	I	0/3.3 V DC	DPRS: On/Off
	7	ANODE	O	3.3 V DC	3.3 V DC power output to DPOCS
	8	GND	-	-	Ground
	9	DP_OPENSW	I	0/3.3 V DC	DPOCS: On/Off
	10	ANODE	O	3.3 V DC	3.3 V DC power output to DPSBS
	11	GND	-	-	Ground
	12	HP_SW	I	0/3.3 V DC	DPSBS: On/Off
	13	ANODE	O	3.3 V DC	3.3 V DC power output to DPTS
	14	GND	-	-	Ground
	15	TMG_SW	I	0/3.3 V DC	DPTS: On/Off
YC6	1	NC	-	-	Not used
Connected to DP LED PWB	2	GND	-	-	Ground
	3	LED_REM	O	0/3.3 V DC	LED control signal
YC7	1	+24V	O	24 V DC	24 V DC power output to DPILSW
Connected to DP interlock switch	2	GND	-	-	Ground
	3	+R24V	I	24 V DC	24 V DC power input from DPILSW
YC8	1	FEED_CL	O	0/24 V DC	DPPFCL: On/Off
Connected to DP paper feed clutch and DP registration clutch	2	+R24V	O	24 V DC	24 V DC power output to DPPFCL
	3	REGIST_CL	O	0/24 V DC	DPRCL: On/Off
	4	+R24V	O	24 V DC	24 V DC power output to DPRCL
YC9	1	CNVY_-BN	O	0/24 V DC(pulse)	DPPFM drive control signal
Connected to DP paper feed motor and DP switchback motor	2	CNVY_-AN	O	0/24 V DC(pulse)	DPPFM drive control signal
	3	CNVY_+A	O	0/24 V DC(pulse)	DPPFM drive control signal
	4	CNVY_+B	O	0/24 V DC(pulse)	DPPFM drive control signal
	5	JNC_-BN	O	0/24 V DC(pulse)	DPSBM drive control signal
	6	JNC_-AN	O	0/24 V DC(pulse)	DPSBM drive control signal
	7	JNC_+A	O	0/24 V DC(pulse)	DPSBM drive control signal
	8	JNC_+B	O	0/24 V DC(pulse)	DPSBM drive control signal

2-4-1 Appendixes

(1) Maintenance kits

Maintenance part name		Parts No.	Alternative part No.
Name used in service	Name used in parts list		
MK-895A/MAINTENANCE KIT (200,000 sheets)	MK-895A/MAINTENANCE KIT	1702K00UN1	072K00U1
Transfer roller unit	HOLDER TRANSFER ASSY	-	-
Drum unit	DRUM UNIT MK	-	-
Developer unit K	DLP UNIT BK MK	-	-
Intermediate transfer unit	IMAGE UNIT MK	-	-
Fuser unit	FUSER UNIT MK	-	-
Primary feed unit	PRIMARY FEED ASS'Y	-	-
MP separation pad	PAD SEPARATION ASSY SP	-	-
MP paper feed roller	ROLLER MPF ASSY SP	-	-
MK-895B/MAINTENANCE KIT (200,000 sheets)	MK-895B/MAINTENANCE KIT	1702K00UN0	072K00U0
Drum unit	DRUM UNIT	-	-
Developer unit C	DLP UNIT C	-	-
Developer unit M	DLP UNIT M	-	-
Developer unit Y	DLP UNIT Y	-	-
MK-470/MAINTENANCE KIT (150,000 sheets)	MK-470/MAINTENANCE KIT	1703M80UN0	073M80UN
DP paper feed roller	PAPER FEED ASSY SP	-	-
DP separation pullay cover	GUIDE RETARD ASSY SP	-	-
DP separation pullay	HOLDER RETARD ASSY SP	-	-

(2) Repetitive defects gauge

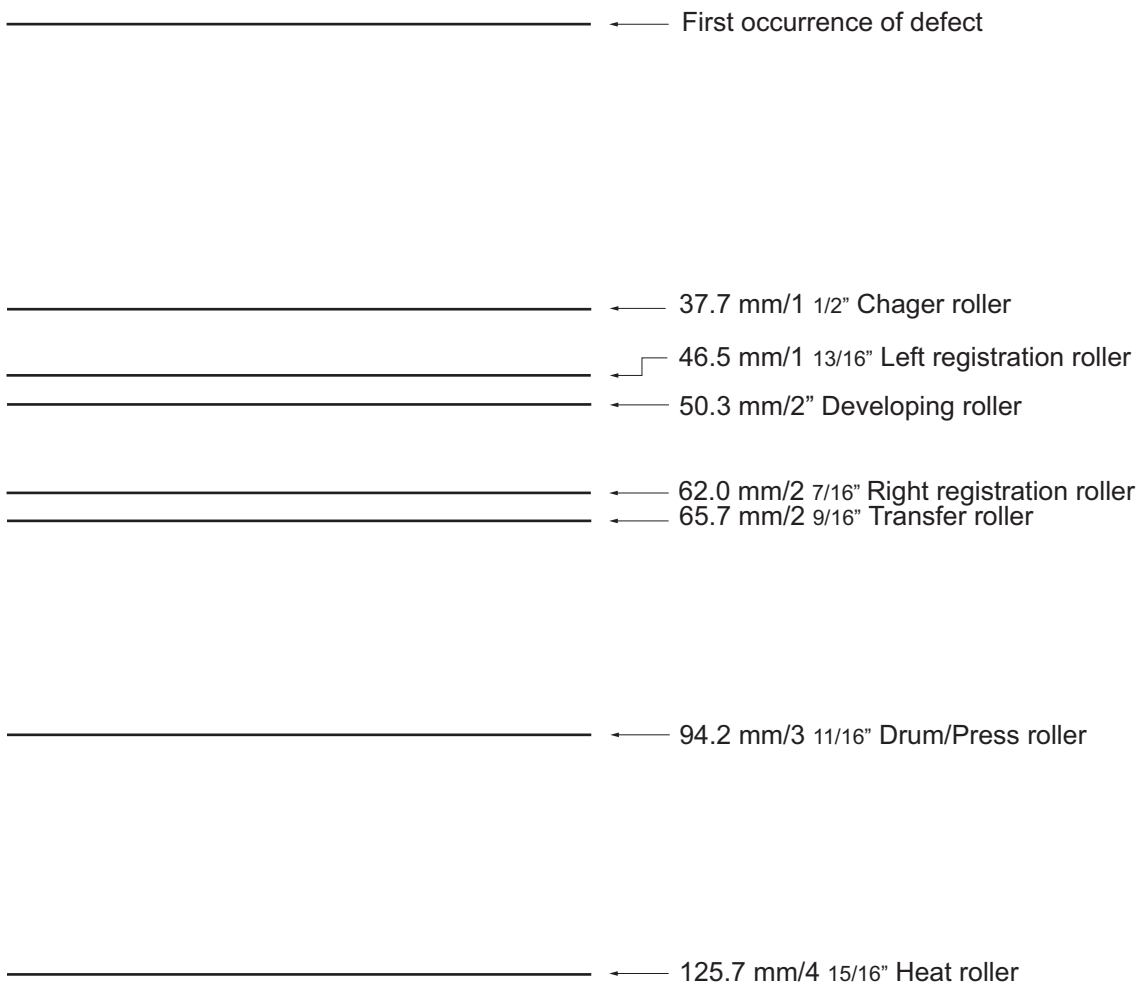

(3) Firmware environment commands

The printer maintains a number of printing parameters in its memory. These parameters may be changed permanently with the FRPO (Firmware RePrOgram) commands.
This section provides information on how to use the FRPO command and its parameters using examples.

Using FRPO commands for reprogramming the firmware

The current settings of the FRPO parameters are listed as the optional values on the service status page.

Note: Before changing any FRPO parameters, print out a service status page, so you will know the parameter values before the changes are made. To return FRPO parameters to their factory default values, send the FRPO INIT (FRPO-INITialize) command.(!R! FRPO INIT; EXIT;)

The FRPO command is sent to the printer in the following sequence:
!R! FRPO parameter, value; EXIT;
Example: Changing emulation mode to PC-PR201/65A
!R! FRPO P1, 11; EXIT;

FRPO parameters

Item	FRPO	Setting values	Factory setting
Default pattern resolution	B8	0: 300 dpi 1: 600 dpi	0
Copy count	C0	Number of copies to print:1-999	1
Page orientation	C1	0: Portrait 1: Landscape	0
Default font No. *	C2 C3 C5	Middle two digits of power-up font Last two digits of power-up font First two digits of power-up font	0 0 0
PCL font switch	C8	0:HP compatibility mode (Characters higher than 127 are not printed.) 32:Conventional mode (Characters higher than 127 are printed. Supported symbol sets: ISO-60 Norway [00D], ISO-15 Italian [00I], ISO-11 Sweden [00S], ISO-6 ASCII [00U], ISO-4 U.K. [01E], ISO-69 France [01F], ISO-21 Germany [01G], ISO-17 Spain [02S], Symbol [19M][a])	0
Total host buffer size	H8	0 to 99 in units of the size defined by FRPO S5	5
Form feed time-out value	H9	Value in units of 5 seconds (0 to 99).	6
Duplex binding	N4	0: Off 1: Long edge 2: Short edge	0
Sleep timer time-out time	N5	1 to 240 minutes [0: Off]	15
Ecoprint level	N6	0: Off 2: On	0

Item	FRPO	Setting values	Factory setting
Default emulation mode	P1	6: PCL 6 9: KPDL	9(U.S.A) or 6(Euro and other)
Carriage-return action *	P2	0: Ignores 0x0d 1: Carriage-return 2: Carriage-return+linefeed	1
Linefeed action *	P3	0: Ignores 0x0d 1: Linefeed 2: Linefeed+carriage-return	1
Automatic emulation sensing (For KPDL3)	P4	0: AES disabled 1: AES enabled	1(U.S.A) or 0(Euro and other)
Automatic emulation switching trigger (For KPDL3)	P7	0: Page eject commands 1: None 2: Page eject and prescribe EXIT 3: Prescribe EXIT 4: Formfeed (^L) 6: Page eject, prescribe EXIT and formfeed 10: Page eject commands; if AES fails, resolves to KPDL	11(U.S.A) or 10(Euro and other)
Command recognition character	P9	ASCII code of 33 to 126	82 (R)
Default stacker	R0	1 (inner tray) 3 5	1

Item	FRPO	Setting values	Factory setting
Default paper size	R2	0: Size of the default paper cassette (See R4.) 1: Monarch (3-7/8 × 7-1/2 inches) 2: Business (4-1/8 × 9-1/2 inches) 3: International DL (11 × 22 cm) 4: International C5 (16.2 × 22.9 cm) 5: Executive (7-1/4 × 10-1/2 inches) 6: US Letter (8-1/2 × 11 inches) 7: US Legal (8-1/2 × 14 inches) 8: A4 (21.0 × 29.7 cm) 9: JIS B5 (18.2 × 25.7 cm) 10: A3 (29.7 ´ 42 cm) 11: B4 (25.7 ´ 36.4 cm) 12: US Ledger (11 ´ 17 inches) 13: ISO A5 14: A6 (10.5 × 14.8 cm) 15: JIS B6 (12.8 × 18.2 cm) 16: Commercial #9 (3-7/8 × 8-7/8 inches) 17: Commercial #6 (3-5/8 × 6-1/2 inches) 18: ISO B5 (17.6 × 25 cm) 19: Custom (11.7 × 17.7 inches) 30: C4 (22.9 ´ 32.4 cm) 31: Hagaki (10 × 14.8 cm) 32: Ofuku-hagaki (14.8 × 20 cm) 33: Officio II 39: 8K 40: 16K 42: 8.5 × 13.5 inches 50: Statement 51: Folio 52: Youkei 2 53: Youkei 4	0
Default cassette	R4	0: MP tray 1: Cassette 1 2: Cassette 2 3: Cassette 3	1
MP tray paper size	R7	Same as the R2 values except: 0	6(U.S.A) or 8(Euro and other)
A4/letter equation	S4	0: Off 1: On	1
Host buffer size	S5	0: 10kB (x H8) 1: 100kB (x H8) 2: 1024kB (x H8)	1
RAM disk size	S6	1 to 1024 MB	400
RAM disk mode	S7	0: Off 1: On	0

Item	FRPO	Setting values	Factory setting
Wide A4	T6	0: Off 1: On	0
Line spacing *	U0	Lines per inch (integer value)	6
Line spacing *	U1	Lines per inch (fraction value)	0
Character spacing *	U2	Characters per inch (integer value)	10
Character spacing *	U3	Characters per inch (fraction value)	0
Country code	U6	0: US-ASCII 1: France 2: Germany 3: UK 4: Denmark 5: Sweden 6: Italy 7: Spain 8: Japan 9: US Legal 10: IBM PC-850 (Multilingual) 11: IBM PC-860 (Portuguese) 12: IBM PC-863 (Canadian French) 13: IBM PC-865 (Norwegian) 14: Norway 15: Denmark 2 16: Spain 2 17: Latin America 21: US ASCII (U7 = 50 SET) 77: HP Roman-8 (U7 = 52 SET)	41
Code set at power up in daisy-wheel emulation	U7	0: Same as the default emulation mode (P1) 1: IBM 6: IBM PC-8 50: US ASCII (U6 = 21 SET) 52: HP Roman-8 (U6 = 77 SET)	53
Font pitch for fixed pitch scalable font	U8	Integer value in cpi: 0 to 99	10
	U9	Fraction value in 1/100 cpi: 0 to 99	0
Font height for the default scalable font *	V0	Integer value in 100 points: 0 to 9	0
	V1	Integer value in points: 0 to 99	12
	V2	Fraction value in 1/100 points: 0, 25, 50, 75	0
Default scalable font *	V3	Name of typeface of up to 32 characters, enclosed with single or double quotation marks	Courier

Item	FRPO	Setting values	Factory setting
Default weight (courier and letter Gothic)	V9	0: Courier = darkness Letter Gothic = darkness 1: Courier = regular Letter Gothic = darkness 4: Courier = darkness Letter Gothic = regular 5: Courier = regular Letter Gothic = regular	5
Color mode	W1	0: Monochrome (grayscale) 1: Color (CMYK)	1
Gloss mode	W6	0: Low (normal) 1: High	0
Paper type for the MP tray	X0	1: Plain 1 2: Transparency 3: Preprinted 4: Label 5: Bond 6: Recycle 7: Vellum 9: Letterhead 10: Color 11: Prepunched 12: Envelope 13: Cardstock 16: Thick 17: High quality 21: Custom1 22: Custom2 23: Custom3 24: Custom4 25: Custom5 26: Custom6 27: Custom7 28: Custom8	1

Item	FRPO	Setting values	Factory setting
Paper type for paper cassettes 1	X1	1: Plain 3: Preprinted 5: Bond 6: Recycled 9: Letterhead 10: Color 11: Prepunched 17: High quality 21: Custom1 22: Custom2 23: Custom3 24: Custom4 25: Custom5 26: Custom6 27: Custom7 28: Custom8	1
Paper type for paper cassettes 2 to 4	X2 X3	1: Plain 3: Preprinted 5: Bond 6: Recycled 9: Letterhead 10: Color 11: Prepunched 17: High quality 21: Custom1 22: Custom2 23: Custom3 24: Custom4 25: Custom5 26: Custom6 27: Custom7 28: Custom8	1
PCL paper source	X9	0: Performs paper selection depending on media type. 1: Performs paper selection depending on paper sources.	0
Automatic continue for ‘Press GO’	Y0	0: Off 1: On	0
Automatic continue timer	Y1	Number from 0 to 99 in increments of 5 seconds	6 (30 secons)
Error message for device error	Y3	0: Not detect 1: Detect	0

Item	FRPO	Setting values	Factory setting
Duplex operation for specified paper type (Prepunched, Preprintedand Letterhead)	Y4	0: Off 1: On	0
Default operation for PDF direct printing	Y5	0: Enlarges or reduces the image to fit in the current paper size. Loads paper from the current paper cassette. 1: Through the image. Loads paper which is the same size as the image. 2: Enlarges or reduces the image to fit in the current paper size. Loads Letter, A4 size paper depending on the image size. 3: Through the image. Loads Letter, A4 size paper depending on the image size. 8: Through the image. Loads paper from the current paper cassette. 9: Through the image. Loads Letter, A4 size paper depending on the image size. 10: Enlarges or reduces the image to fit in the current paper size. Loads Letter, A4 size paper depending on the imagesize.	0
e-MPS error	Y6	0:Does not print the error report and display the error message. 1:Prints the error report. 2:Displays the error message. 3:Prints the error report and displays the error message.	3

a. Characters higher than 127 are printed regardless of the C8 value. However, setting C8 to 0 does not print character code 160.

(4) Chart of image adjustment procedures

Adjusting order	Item	Image	Description	Maintenance mode		Original	Page	Remarks
				Item No.	Mode			
1	Adjusting the magnification in the main scanning direction (printing adjustment)		Polygon motor speed adjustment	U053	POLYGON	U053 test pattern	P.1-3-26	
2	Adjusting the magnification in the auxiliary scanning direction (printing adjustment)		Drive motor speed adjustment	U053	MAIN	U053 test pattern	P.1-3-26	
3	Adjusting the center line of the MP tray (printing adjustment)		Adjusting the LSU print start timing	U034	LSUOUT LEFT (MPT)	U034 test pattern	P.1-3-21	To make an adjustment for duplex copying, select LSUOUT LEFT (DUPLEX).
4	Adjusting the center line of the cassettes (printing adjustment)		Adjusting the LSU print start timing	U034	LSUOUT LEFT (CASSETTE 1) LSUOUT LEFT (CASSETTE 2) LSUOUT LEFT (CASSETTE 3)	U034 test pattern	P.1-3-21	Cassette 1: select Center (CASSETTE 1) Cassette 2: select Center (CASSETTE 2) Cassette 3: select Center (CASSETTE 3)
5	Adjusting the leading edge registration of the MP tray (printing adjustment)		Registration motor turning on timing (secondary paper feed start timing)	U034	LSUOUT TOP MPT(L) LSUOUT TOP MPT(S)	U034 test pattern	P.1-3-21	To make an adjustment for duplex copying, select LSUOUT TOP DUPLEX. L: PAPER WIDTH 218mm or more S: PAPER WIDTH less than 218mm
6	Adjusting the leading edge registration of the cassette (printing adjustment)		Registration motor turning on timing (secondary paper feed start timing)	U034	LSUOUT TOP CASSETTE(L) SUOUT TOP CASSETTE(S)	U034 test pattern	P.1-3-21	L: PAPER WIDTH 218mm or more S: PAPER WIDTH less than 218mm
7	Adjusting the leading edge margin (printing adjustment)		LSU illumination start timing	U402	LESD	U402 test pattern	P.1-3-72	
8	Adjusting the trailing edge margin (printing adjustment)		LSU illumination end timing	U402	TRAIL	U402 test pattern	P.1-3-72	
9	Adjusting the left and right margins (printing adjustment)		LSU illumination start/end timing	U402	A MARGIN C MARGIN	U402 test pattern	P.1-3-72	
10	Adjusting magnification of the scanner in the main scanning direction (scanning adjustment)		Data processing	U065 U070	Y SCAN ZOOM Y SCAN ZOOM	Test chart	P.1-3-29 P.1-3-35	U065: For copying an original placed on the platen. U070: For copying originals from the DP.

Adjusting order	Item	Image	Description	Maintenance mode		Original	Page	Remarks
				Item No.	Mode			
11	Adjusting magnification of the scanner in the auxiliary scanning direction (scanning adjustment)	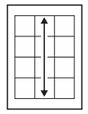	Original scanning speed	U065 U070	X SCAN ZOOM X SCAN ZOOM	Test chart	P.1-3-29 P.1-3-35	U065: For copying an original placed on the platen. U070: For copying originals from the DP.
12	Adjusting the center line (scanning adjustment)	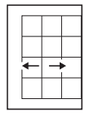	Adjusting the original scan data (image adjustment)	U067 U072	FRONT ROTATE FRONT BACK	Test chart	P.1-3-32 P.1-3-38	U067: For copying an original placed on the platen. To make an adjustment for rotate copying, select ROTATE. U072: For copying originals from the DP. To make an adjustment for duplex copying, select BACK.
13	Adjusting the leading edge registration (scanning adjustment)	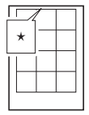	Original scan start timing	U066 U071	FRONT ROTATE FRONT HEAD BACK HEAD	Test chart	P.1-3-31 P.1-3-36	U066: For copying an original placed on the platen. To make an adjustment for trailing edge registration, select ROTATE. U071: For copying originals from the DP. To make an adjustment for duplex copying, select BACK HEAD.
14	Adjusting the leading edge margin (scanning adjustment)	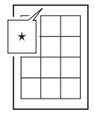	Adjusting the original scan data (image adjustment)	U403 U404	B MARGIN B MARGIN	Test chart	P.1-3-73 P.1-3-74	U403: For copying an original placed on the contact glass U404: For copying originals from the DP.
15	Adjusting the trailing edge margin (scanning adjustment)	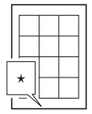	Adjusting the original scan data (image adjustment)	U403 U404	D MARGIN D MARGIN	Test chart	P.1-3-73 P.1-3-74	U403: For copying an original placed on the contact glass U404: For copying originals from the DP.
16	Adjusting the left and right margins (scanning adjustment)	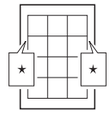	Adjusting the original scan data (image adjustment)	U403 U404	A MARGIN C MARGIN A MARGIN C MARGIN	Test chart	P.1-3-73 P.1-3-74	U403: For copying an original placed on the contact glass U404: For copying originals from the DP.

When maintenance item U411 (Automatic adjustment in the scanner) is run using the specified original (P/N 7505000005), the following adjustments are automatically made:
Adjusting the scanner magnification (U065)
Adjusting the scanner leading edge registration (U066)
Adjusting the scanner center line (U067)

When maintenance item U411 (Automatic adjustment in the DP) is run using the specified original (P/N 303LJ57010), the following adjustments are automatically made:
Adjusting the DP magnification (U070)
Adjusting the DP leading edge registration (U071)
Adjusting the DP center line (U072)

Image quality

Item	Specifications
100% magnification	Machine: ±0.8% Using DP: ±1.5%
Enlargement/reduction	Machine: ±1.0% Using DP: ±1.5%
Lateral squareness	Machine: ±1.5 mm/375 mm Using DP: ±3.0 mm/375 mm
Leading edge registration	Cassette: ±2.5 mm MP tray: ±2.5 mm Duplex: ±2.5 mm
Skewed paper feed (left-right difference)	Cassette: 1.5 mm or less MP tray: 1.5 mm or less Duplex: 2.0 mm or less
Lateral image shifting	Cassette: ±2.0 mm MP tray: ±2.0 mm Duplex: ±3.0 mm

(5) Wiring diagram

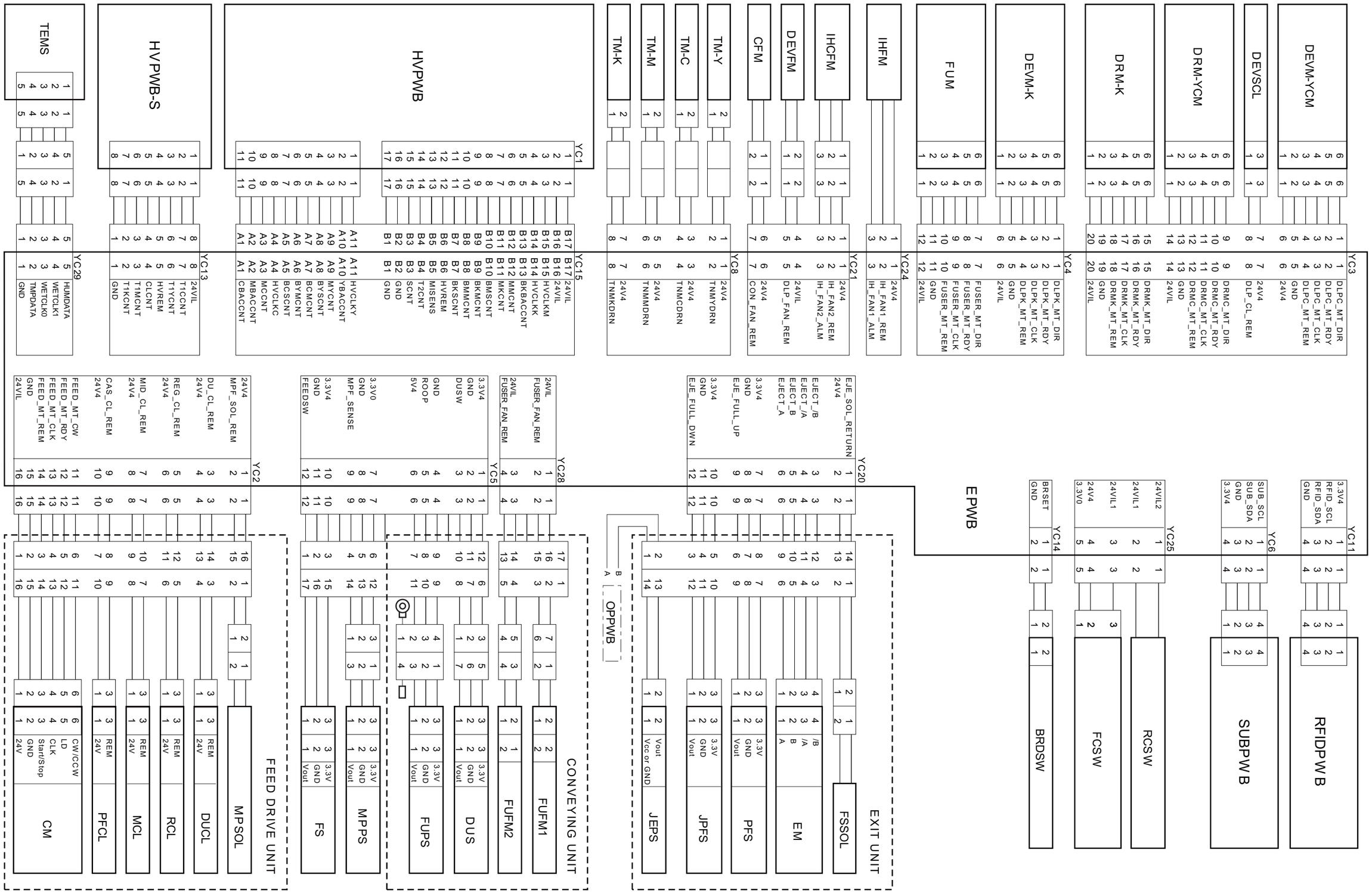

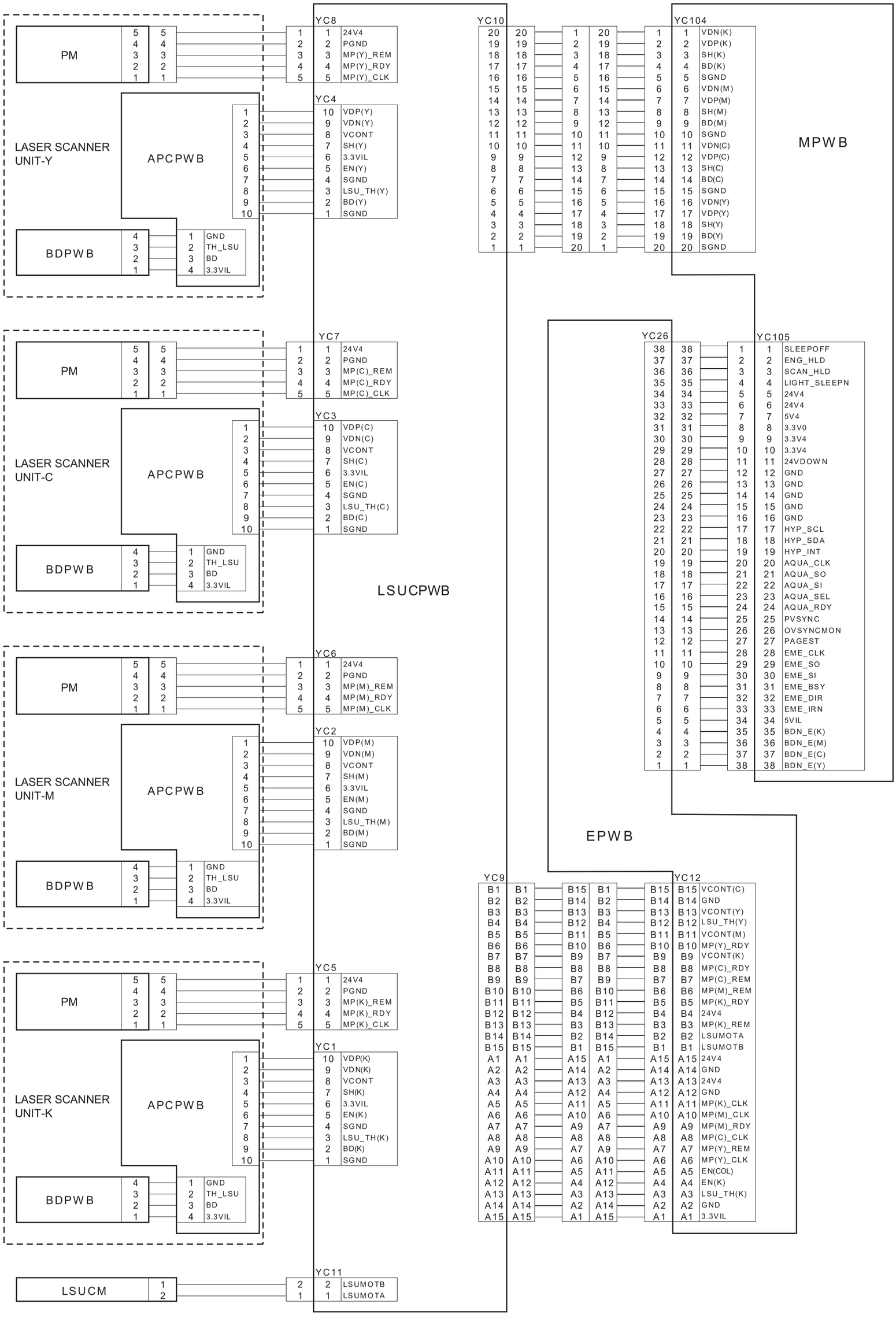
PM
LASER SCANNER UNIT-Y
APCPWB
BDPWB
PM
LASER SCANNER UNIT-C
APCPWB
BDPWB
PM
LASER SCANNER UNIT-M
APCPWB
BDPWB
PM
LASER SCANNER UNIT-K
APCPWB
BDPWB
LSUCM
YC8
1 24V4
2 PGND
3 MP(Y)_REM
4 MP(Y)_RDY
5 MP(Y)_CLK
YC4
10 VDP(Y)
9 VDN(Y)
8 VCONT
7 SH(Y)
6 3.3VIL
5 EN(Y)
4 SGND
3 LSU_TH(Y)
2 BD(Y)
1 SGND
YC7
1 24V4
2 PGND
3 MP(C)_REM
4 MP(C)_RDY
5 MP(C)_CLK
YC3
10 VDP(C)
9 VDN(C)
8 VCONT
7 SH(C)
6 3.3VIL
5 EN(C)
4 SGND
3 LSU_TH(C)
2 BD(C)
1 SGND
YC6
1 24V4
2 PGND
3 MP(M)_REM
4 MP(M)_RDY
5 MP(M)_CLK
YC2
10 VDP(M)
9 VDN(M)
8 VCONT
7 SH(M)
6 3.3VIL
5 EN(M)
4 SGND
3 LSU_TH(M)
2 BD(M)
1 SGND
YC5
1 24V4
2 PGND
3 MP(K)_REM
4 MP(K)_RDY
5 MP(K)_CLK
YC1
10 VDP(K)
9 VDN(K)
8 VCONT
7 SH(K)
6 3.3VIL
5 EN(K)
4 SGND
3 LSU_TH(K)
2 BD(K)
1 SGND
YC11
2 LSUMOTB
1 LSUMOTA
GND
TH_LSU
BD
3.3VIL
LSUCPWB
YC10
YC104
1 VDN(K)
2 VDP(K)
3 SH(K)
4 BD(K)
5 SGND
6 VDN(M)
7 VDP(M)
8 SH(M)
9 BD(M)
10 SGND
11 VDN(C)
12 VDP(C)
13 SH(C)
14 BD(C)
15 SGND
16 VDN(Y)
17 VDP(Y)
18 SH(Y)
19 BD(Y)
20 SGND
MPWB
YC26
YC105
1 SLEEPOFF
2 ENG_HLD
3 SCAN_HLD
4 LIGHT_SLEEPN
5 24V4
6 24V4
7 5V4
8 3.3V0
9 3.3V4
10 3.3V4
11 24VDOWN
12 GND
13 GND
14 GND
15 GND
16 GND
17 HYP_SCL
18 HYP_SDA
19 HYP_INT
20 AQUA_CLK
21 AQUA_SO
22 AQUA_SI
23 AQUA_SEL
24 AQUA_RDY
25 PVSYNC
26 OVSYNCMON
27 PAGEST
28 EME_CLK
29 EME_SO
30 EME_SI
31 EME_BSY
32 EME_DIR
33 EME_IRN
34 5VIL
35 BDN_E(K)
36 BDN_E(M)
37 BDN_E(C)
38 BDN_E(Y)
EPWB
YC9
YC12
B1 VCONT(C)
B2 GND
B3 VCONT(Y)
B4 LSU_TH(Y)
B5 VCONT(M)
B6 MP(Y)_RDY
B7 VCONT(K)
B8 MP(C)_RDY
B9 MP(C)_REM
B10 MP(M)_REM
B11 MP(K)_RDY
B12 24V4
B13 MP(K)_REM
B14 LSUMOTA
B15 LSUMOTB
A1 3.3VIL
A2 GND
A3 LSU_TH(K)
A4 EN(K)
A5 EN(COL)
A6 MP(Y)_CLK
A7 MP(Y)_REM
A8 MP(C)_CLK
A9 MP(M)_RDY
A10 MP(M)_CLK
A11 MP(K)_CLK
A12 GND
A13 24V4
A14 GND
A15 24V4

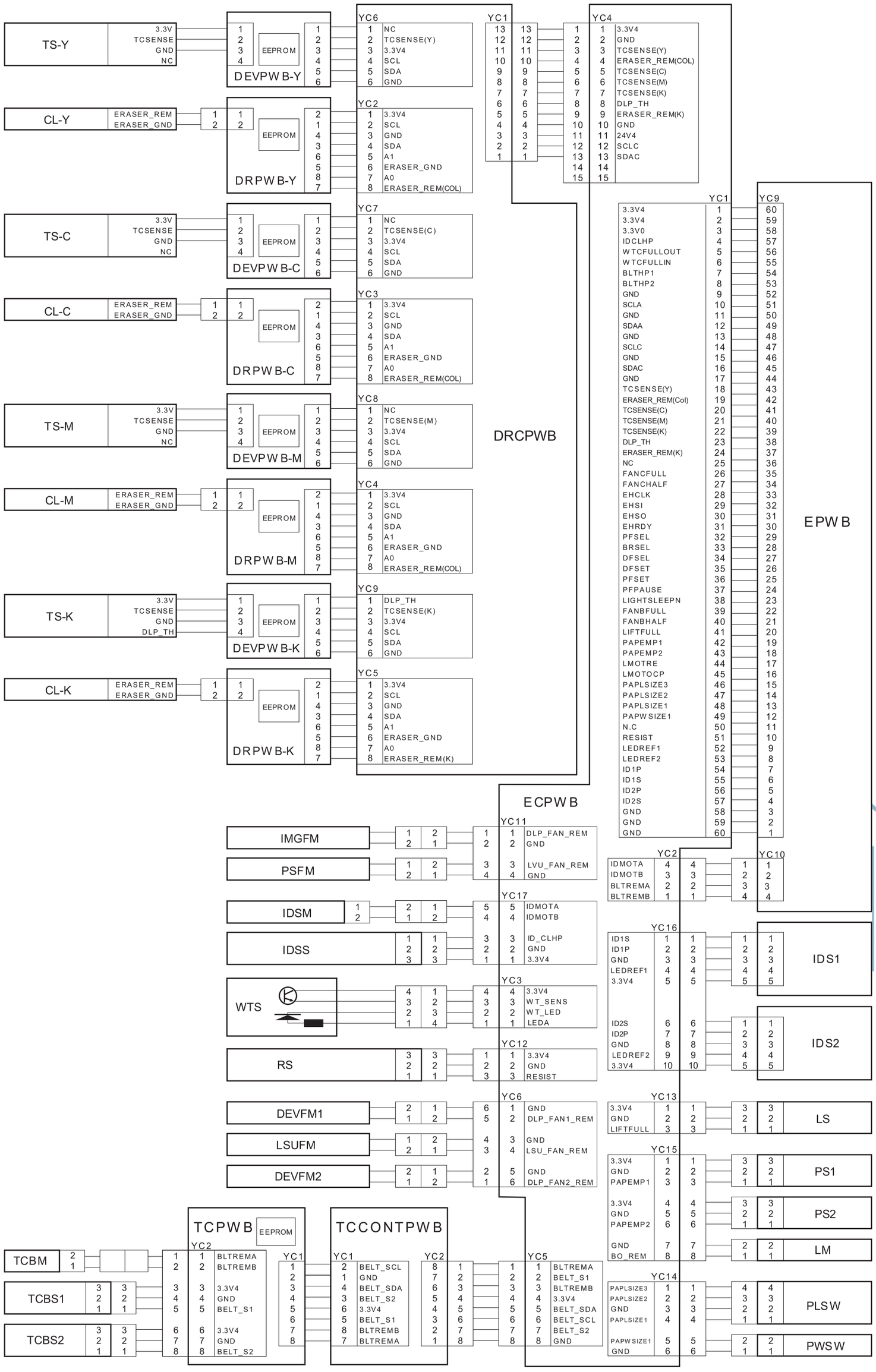
TS-Y
3.3V
TCSENSE
GND
NC
EEPROM
DEVPWB-Y
CL-Y
ERASER_REM
ERASER_GND
DRPWB-Y
TS-C
DEVPWB-C
CL-C
DRPWB-C
TS-M
DEVPWB-M
CL-M
DRPWB-M
TS-K
DLP_TH
DEVPWB-K
CL-K
DRPWB-K
YC6
NC
TCSENSE(Y)
3.3V4
SCL
SDA
GND
YC2
A1
ERASER_GND
A0
ERASER_REM(COL)
YC7
TCSENSE(C)
YC3
YC8
TCSENSE(M)
YC4
YC9
TCSENSE(K)
YC5
ERASER_REM(K)
DRCPWB
YC1
YC4
24V4
SCLC
SDAC
EPWB
YC9
3.3V0
IDCLHP
WTCFULLOUT
WTCFULLIN
BLTHP1
BLTHP2
SCLA
SDAA
TCSENSE(Col)
FANCFULL
FANCHALF
EHCLK
EHSI
EHSO
EHRDY
PFSEL
BRSEL
DFSEL
DFSET
PFSET
PFPAUSE
LIGHTSLEEPN
FANBFULL
FANBHALF
LIFTFULL
PAPEMP1
PAPEMP2
LMOTRE
LMOTOCP
PAPLSIZE3
PAPLSIZE2
PAPLSIZE1
PAPWSIZE1
N.C
RESIST
LEDREF1
LEDREF2
ID1P
ID1S
ID2P
ID2S
ECPWB
YC11
DLP_FAN_REM
LVU_FAN_REM
IMGFM
PSFM
IDSM
IDSS
WTS
RS
DEVFM1
LSUFM
DEVFM2
YC17
IDMOTA
IDMOTB
ID_CLHP
YC3
WT_SENS
WT_LED
LEDA
YC12
YC6
DLP_FAN1_REM
LSU_FAN_REM
DLP_FAN2_REM
YC10
YC16
IDS1
IDS2
YC13
LS
YC15
PS1
PS2
LM
YC14
PLSW
PWSW
TCPWB
EEPROM
TCBM
TCBS1
TCBS2
BLTREMA
BLTREMB
BELT_S1
BELT_S2
TCCONTPWB
BELT_SCL
BELT_SDA

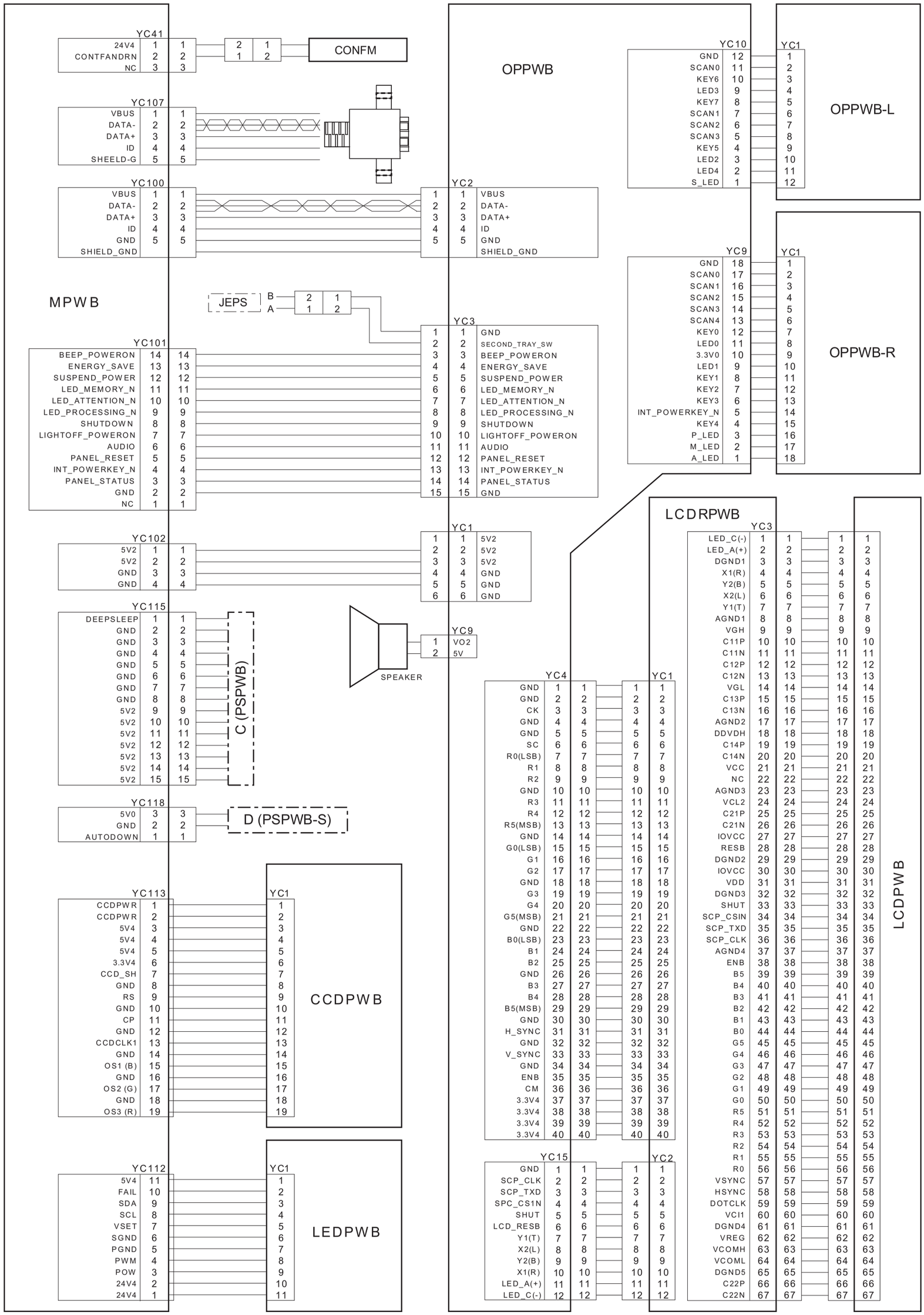
MPWB
OPPWB
OPPWB-L
OPPWB-R
LCDRPWB
LCDPWB
CCDPWB
LEDPWB
CONFM
C (PSPWB)
D (PSPWB-S)
JEPS
SPEAKER
YC41
24V4
CONTFANDRN
NC
YC107
VBUS
DATA-
DATA+
ID
SHEELD-G
YC100
VBUS
DATA-
DATA+
ID
GND
SHIELD_GND
YC101
BEEP_POWERON
ENERGY_SAVE
SUSPEND_POWER
LED_MEMORY_N
LED_ATTENTION_N
LED_PROCESSING_N
SHUTDOWN
LIGHTOFF_POWERON
AUDIO
PANEL_RESET
INT_POWERKEY_N
PANEL_STATUS
GND
NC
YC102
5V2
5V2
GND
GND
YC115
DEEPSLEEP
GND
5V2
YC118
5V0
GND
AUTODOWN
YC113
CCDPWR
CCDPWR
5V4
3.3V4
CCD_SH
RS
CP
CCDCLK1
OS1 (B)
OS2 (G)
OS3 (R)
YC112
5V4
FAIL
SDA
SCL
VSET
SGND
PGND
PWM
POW
24V4
YC2
YC3
YC1
YC9
YC10
YC4
YC15
YC3
YC1
YC2
GND
SCAN0
KEY6
LED3
KEY7
SCAN1
SCAN2
SCAN3
KEY5
LED2
LED4
S_LED
SCAN4
KEY0
LED0
3.3V0
LED1
KEY1
KEY2
KEY3
INT_POWERKEY_N
KEY4
P_LED
M_LED
A_LED
SECOND_TRAY_SW
5V2
VO2
5V
LED_C(-)
LED_A(+)
DGND1
X1(R)
Y2(B)
X2(L)
Y1(T)
AGND1
VGH
C11P
C11N
C12P
C12N
VGL
C13P
C13N
AGND2
DDVDH
C14P
C14N
VCC
NC
AGND3
VCL2
C21P
C21N
IOVCC
RESB
DGND2
IOVCC
VDD
DGND3
SHUT
SCP_CSIN
SCP_TXD
SCP_CLK
AGND4
ENB
B5
B4
B3
B2
B1
B0
G5
G4
G3
G2
G1
G0
R5
R4
R3
R2
R1
R0
VSYNC
HSYNC
DOTCLK
VCI1
DGND4
VREG
VCOMH
VCOML
DGND5
C22P
C22N
CK
SC
R0(LSB)
R1
R2
R3
R4
R5(MSB)
G0(LSB)
G1
G2
G3
G4
G5(MSB)
B0(LSB)
B1
B2
B3
B4
B5(MSB)
H_SYNC
V_SYNC
CM
3.3V4

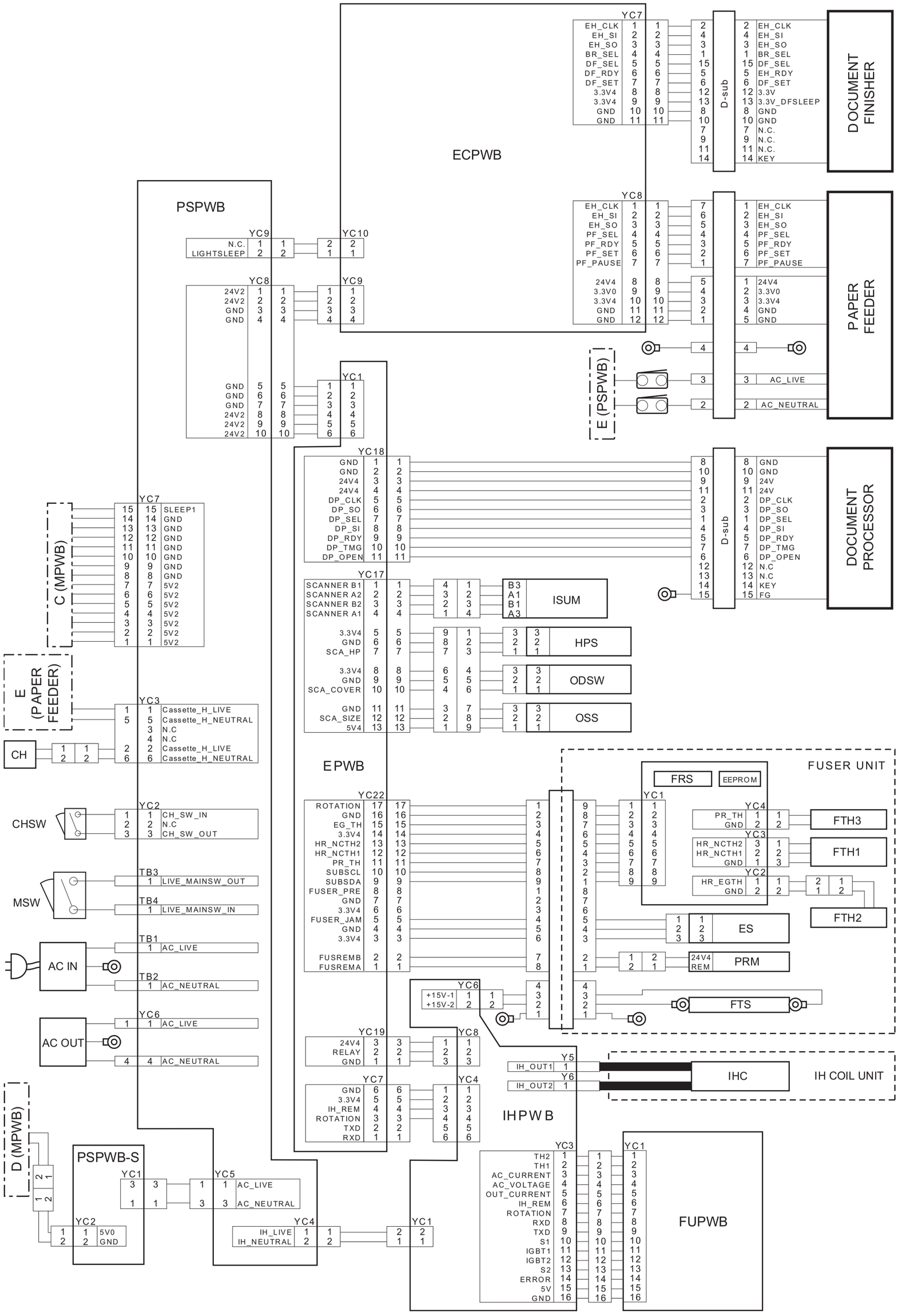
ECPWB
YC7
EH_CLK
EH_SI
EH_SO
BR_SEL
DF_SEL
DF_RDY
DF_SET
3.3V4
3.3V4
GND
GND
D-sub
EH_CLK
EH_SI
EH_SO
BR_SEL
DF_SEL
EH_RDY
DF_SET
3.3V
3.3V_DFSLEEP
GND
GND
N.C.
N.C.
N.C.
KEY
DOCUMENT FINISHER
YC8
EH_CLK
EH_SI
EH_SO
PF_SEL
PF_RDY
PF_SET
PF_PAUSE
24V4
3.3V0
3.3V4
GND
GND
EH_CLK
EH_SI
EH_SO
PF_SEL
PF_RDY
PF_SET
PF_PAUSE
24V4
3.3V0
3.3V4
GND
GND
AC_LIVE
AC_NEUTRAL
PAPER FEEDER
E (PSPWB)
PSPWB
YC9
N.C.
LIGHTSLEEP
YC10
YC8
24V2
24V2
GND
GND
YC9
GND
GND
GND
24V2
24V2
24V2
YC1
YC18
GND
GND
24V4
24V4
DP_CLK
DP_SO
DP_SEL
DP_SI
DP_RDY
DP_TMG
DP_OPEN
GND
GND
24V
24V
DP_CLK
DP_SO
DP_SEL
DP_SI
DP_RDY
DP_TMG
DP_OPEN
N.C
N.C
KEY
FG
DOCUMENT PROCESSOR
YC7
SLEEP1
GND
GND
GND
GND
GND
GND
5V2
5V2
5V2
5V2
5V2
5V2
C (MPWB)
YC17
SCANNER B1
SCANNER A2
SCANNER B2
SCANNER A1
ISUM
3.3V4
GND
SCA_HP
HPS
3.3V4
GND
SCA_COVER
ODSW
GND
SCA_SIZE
5V4
OSS
YC3
Cassette_H_LIVE
Cassette_H_NEUTRAL
N.C
N.C
Cassette_H_LIVE
Cassette_H_NEUTRAL
E (PAPER FEEDER)
CH
EPWB
YC22
ROTATION
GND
EG_TH
3.3V4
HR_NCTH2
HR_NCTH1
PR_TH
SUBSCL
SUBSDA
FUSER_PRE
GND
3.3V4
FUSER_JAM
GND
3.3V4
FUSREMB
FUSREMA
FUSER UNIT
FRS
EEPROM
YC1
YC4
PR_TH
GND
FTH3
YC3
HR_NCTH2
HR_NCTH1
GND
FTH1
YC2
HR_EGTH
GND
FTH2
ES
24V4
REM
PRM
YC6
+15V-1
+15V-2
FTS
CHSW
YC2
CH_SW_IN
N.C
CH_SW_OUT
MSW
TB3
LIVE_MAINSW_OUT
TB4
LIVE_MAINSW_IN
AC IN
TB1
AC_LIVE
TB2
AC_NEUTRAL
AC OUT
YC6
AC_LIVE
AC_NEUTRAL
YC19
24V4
RELAY
GND
YC8
YC7
GND
3.3V4
IH_REM
ROTATION
TXD
RXD
YC4
Y5
IH_OUT1
Y6
IH_OUT2
IHC
IH COIL UNIT
IHPWB
D (MPWB)
PSPWB-S
YC1
YC5
AC_LIVE
AC_NEUTRAL
YC2
5V0
GND
YC4
IH_LIVE
IH_NEUTRAL
YC1
YC3
TH2
TH1
AC_CURRENT
AC_VOLTAGE
OUT_CURRENT
IH_REM
ROTATION
RXD
TXD
S1
IGBT1
IGBT2
S2
ERROR
5V
GND
YC1
FUPWB

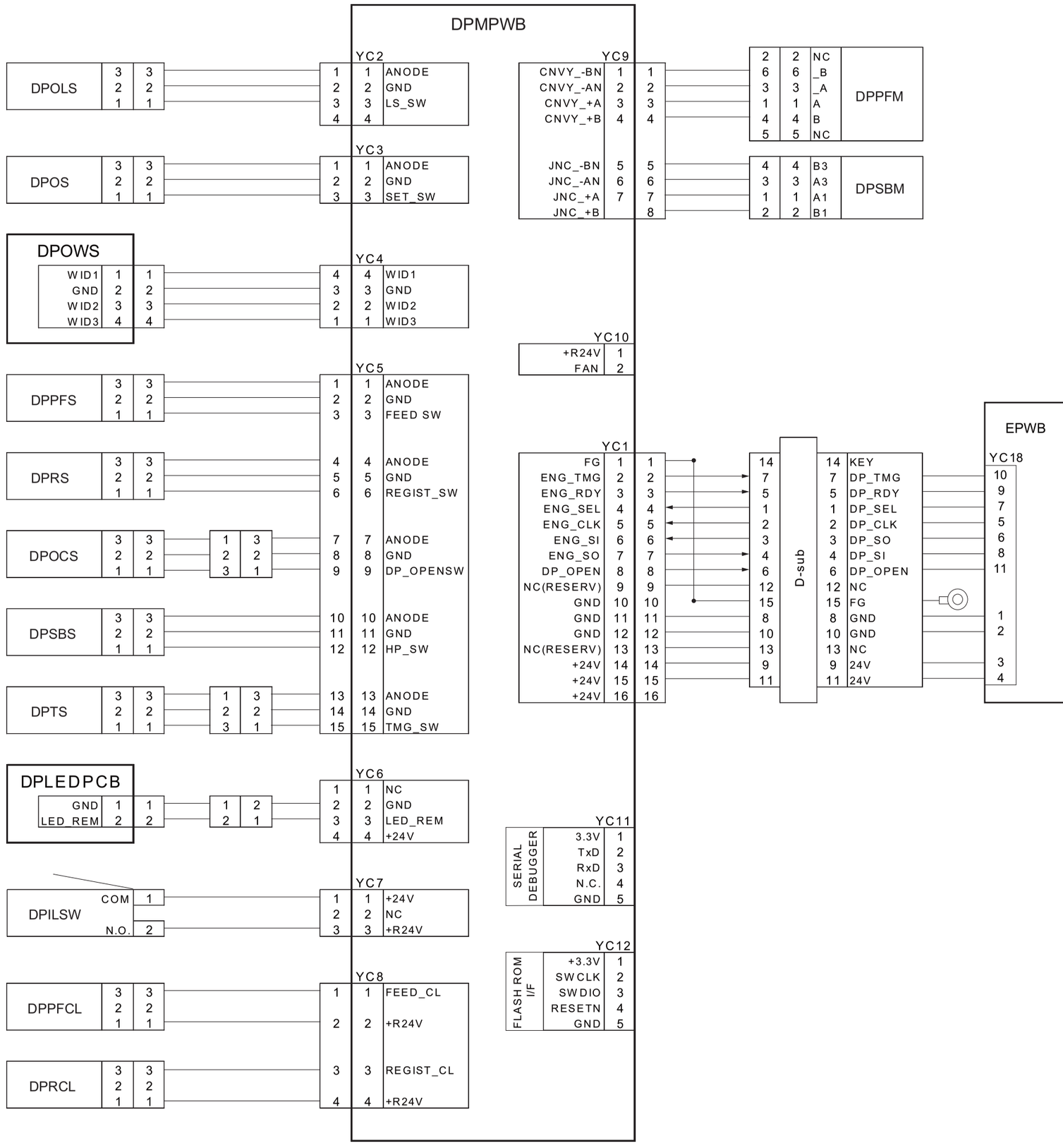
DPMPWB
DPOLS
DPOS
DPOWS
WID1
GND
WID2
WID3
DPPFS
DPRS
DPOCS
DPSBS
DPTS
DPLEDPCB
GND
LED_REM
DPILSW
COM
N.O.
DPPFCL
DPRCL
YC2
ANODE
GND
LS_SW
YC3
ANODE
GND
SET_SW
YC4
WID1
GND
WID2
WID3
YC5
ANODE
GND
FEED SW
ANODE
GND
REGIST_SW
ANODE
GND
DP_OPENSW
ANODE
GND
HP_SW
ANODE
GND
TMG_SW
YC6
NC
GND
LED_REM
+24V
YC7
+24V
NC
+R24V
YC8
FEED_CL
+R24V
REGIST_CL
+R24V
YC9
CNVY_-BN
CNVY_-AN
CNVY_+A
CNVY_+B
JNC_-BN
JNC_-AN
JNC_+A
JNC_+B
DPPFM
NC
_B
_A
A
B
NC
DPSBM
B3
A3
A1
B1
YC10
+R24V
FAN
YC1
FG
ENG_TMG
ENG_RDY
ENG_SEL
ENG_CLK
ENG_SI
ENG_SO
DP_OPEN
NC(RESERV)
GND
GND
GND
NC(RESERV)
+24V
+24V
+24V
D-sub
KEY
DP_TMG
DP_RDY
DP_SEL
DP_CLK
DP_SO
DP_SI
DP_OPEN
NC
FG
GND
GND
NC
24V
24V
EPWB
YC18
YC11
SERIAL DEBUGGER
3.3V
TxD
RxD
N.C.
GND
YC12
FLASH ROM I/F
+3.3V
SWCLK
SWDIO
RESETN
GND

Paper feeder
Installation Guide

PF-470/471 PAPER FEEDER

PF-470

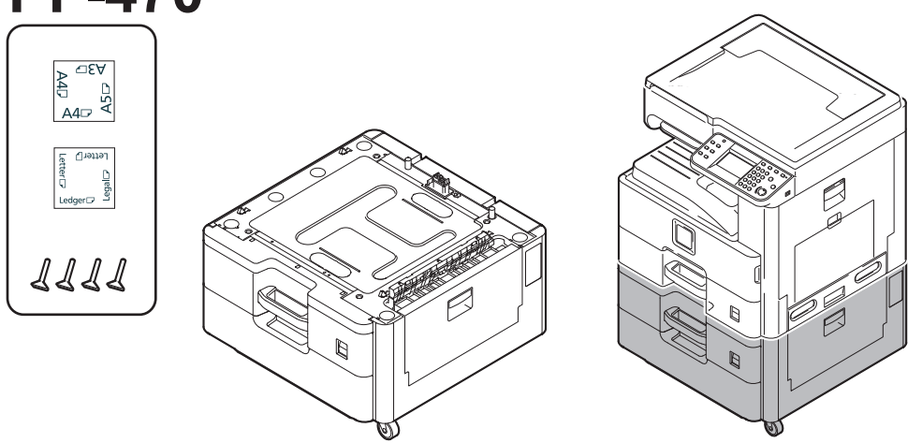

PF-471

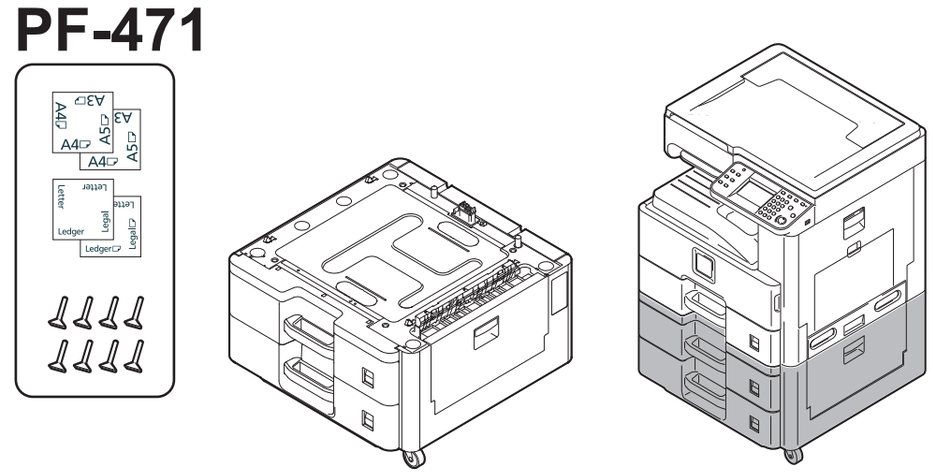

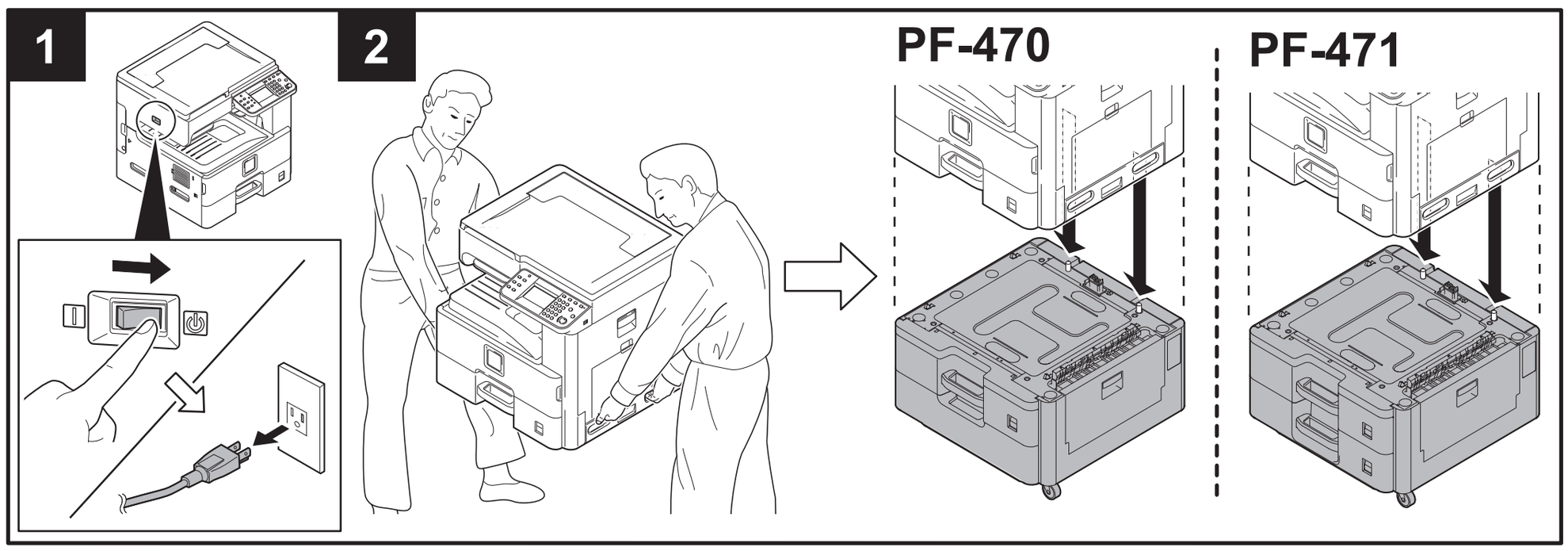

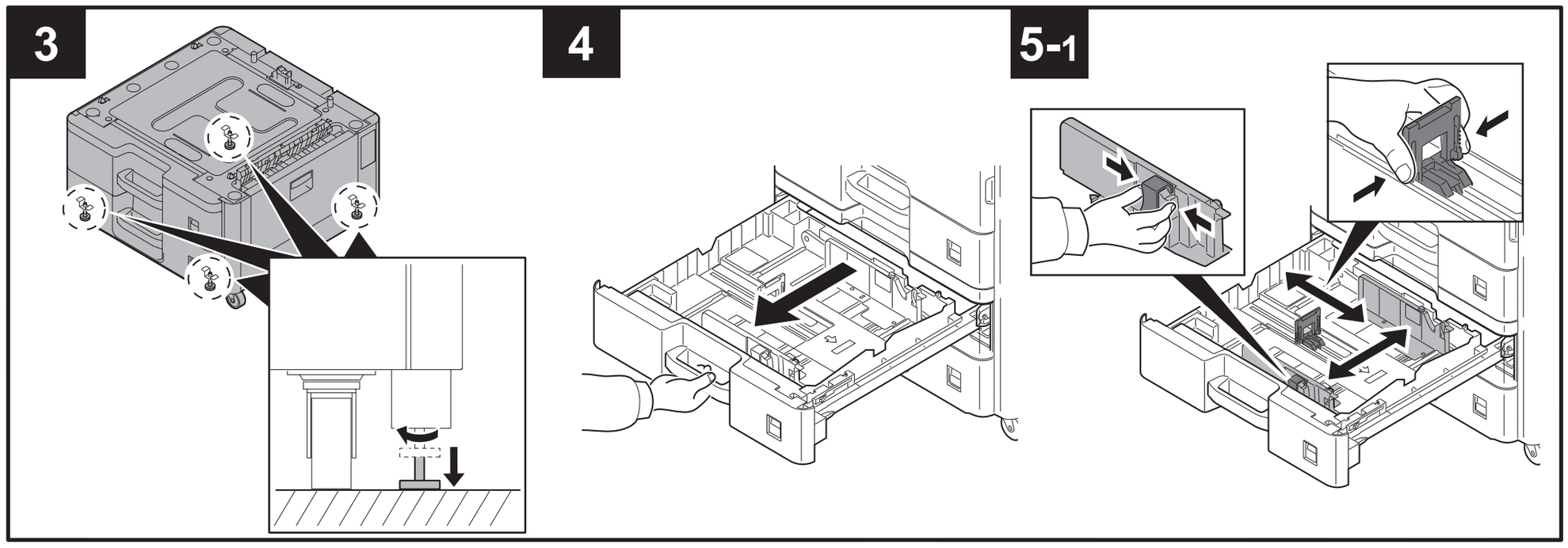

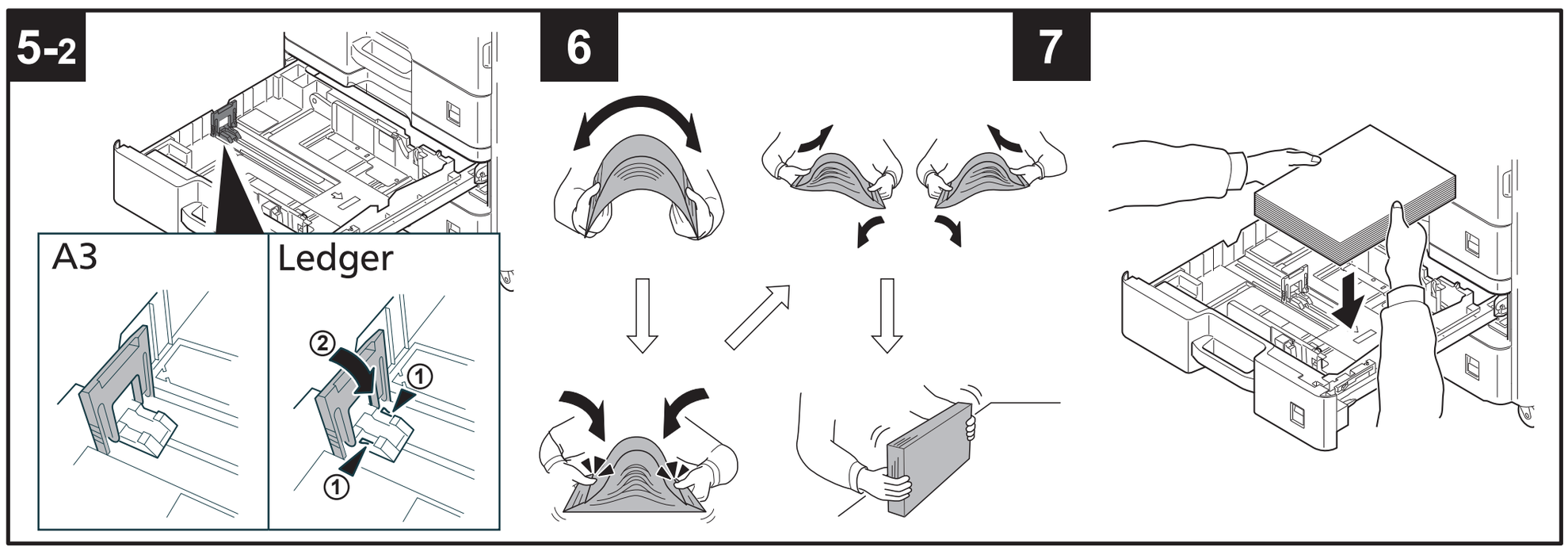

2010.9
303NN56710

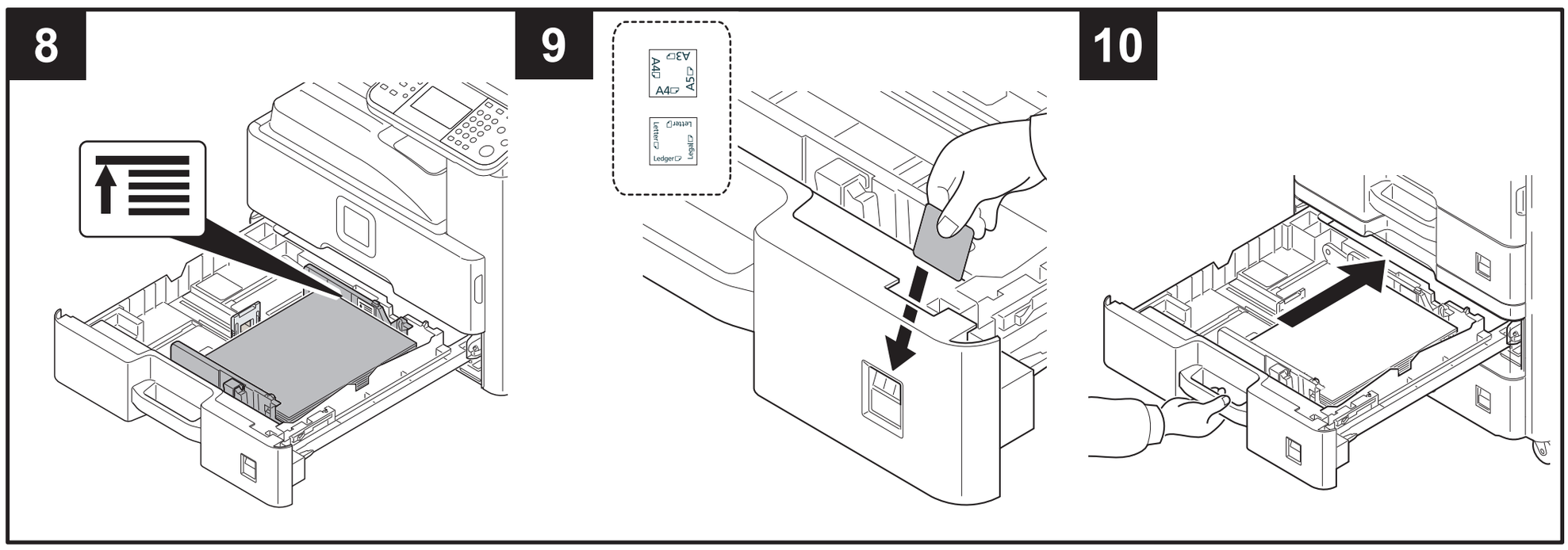

ENG

Fix Paper Width Guide
You can fix the paper width guide using the supplied retaining pins.
Follow the steps below as necessary.

FR

Fixation du guide de largeur du papier
Vous pouvez fixer le guide de largeur du papier en utilisant les goupilles de fixation fournies.
Suivez les étapes ci-dessous en fonction des besoins.

ES

Fijar la guía de anchura del papel
Puede fijar la guía de anchura del papel con los pernos de retén proporcionados.
Siga los pasos siguientes según sea necesario.

DE

Papierbreitenführung befestigen
Sie können die Papierbreitenführung mit den gelieferten Haltebolzen befestigen.
Folgen Sie den Schritten unten falls notwendig.

IT

Fissare la guida di larghezza carta
Per fissare la guida di larghezza carta, utilizzare i perni di fissaggio forniti.
Eseguire i seguenti punti come necessario.

CN

固定纸张宽度导板
您可以使用附带的定位销固定纸张宽度导板。
必要时执行如下步骤。

TW

固定紙張寬度導板
您可以使用隨附的定位卡榫固定紙張寬度導板。
如有必要，請執行以下步驟。

KO

용지폭 가이드 고정
기기와 함께 제공된 핀으로 용지폭 가이드를 고정시킬 수 있습니다.
필요하면 아래의 작업을 하십시오.

JP

用紙幅ガイドの固定
用紙幅ガイドは同梱のピンで固定することが可能です。
必要に応じて、以下の作業を行って下さい。

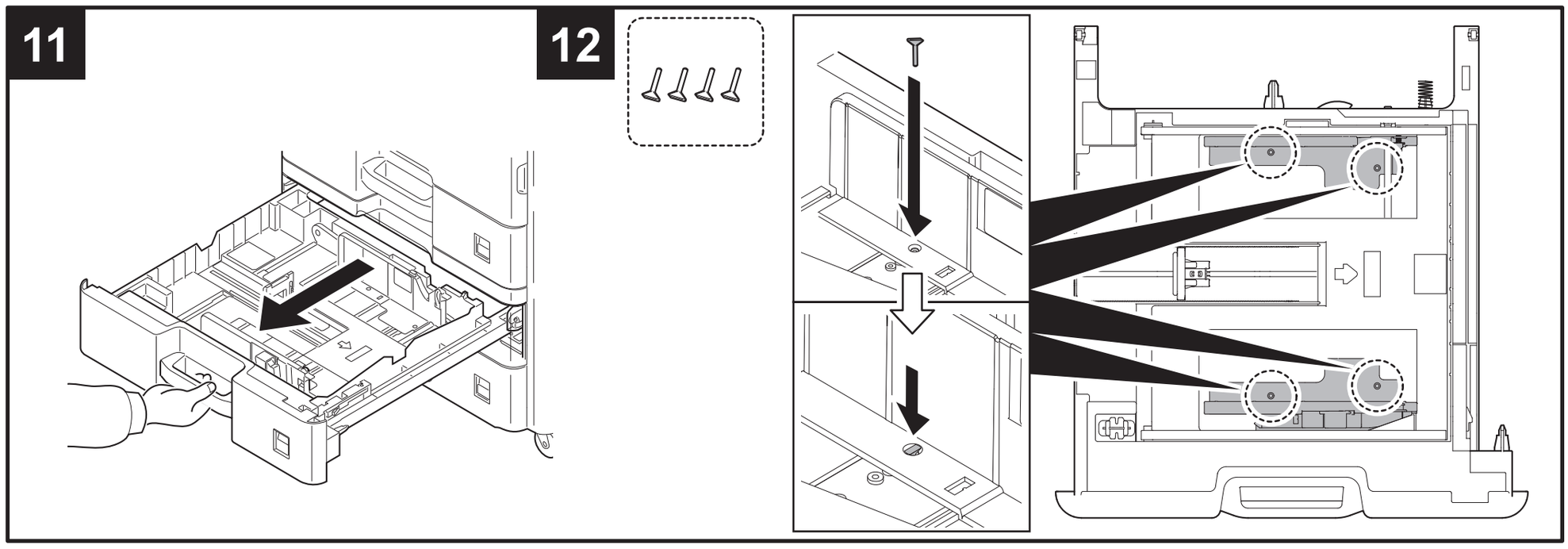

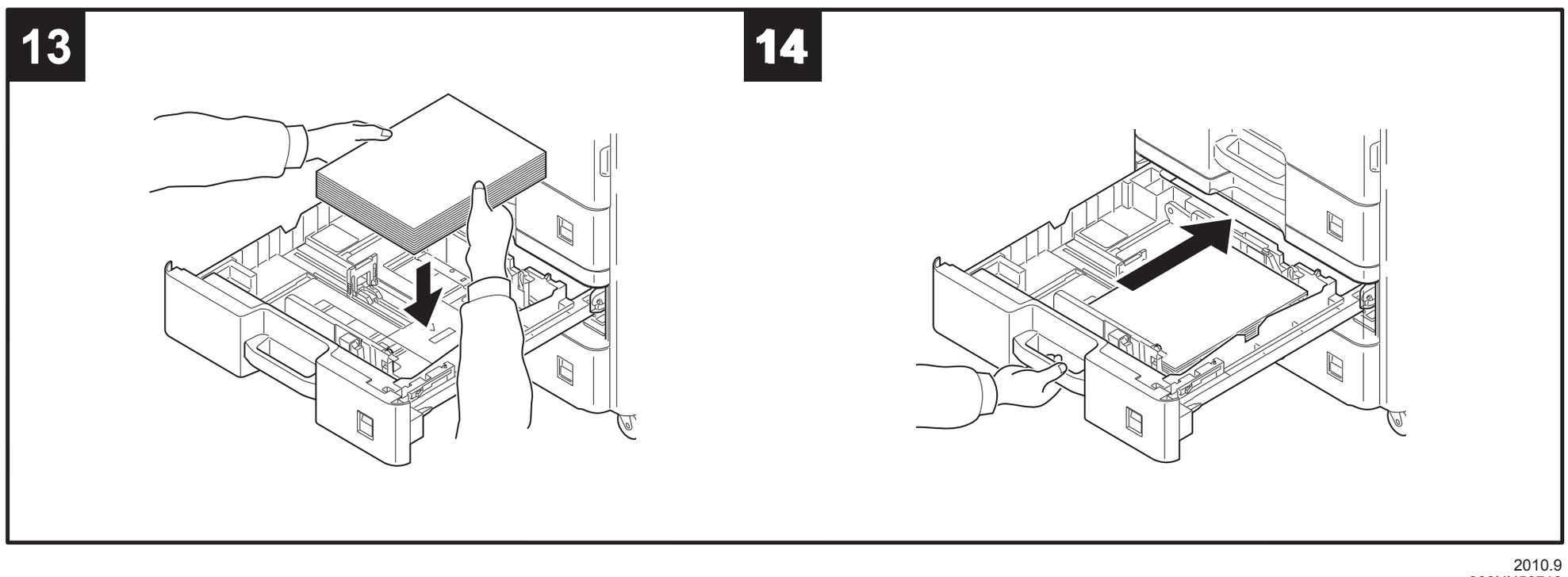

2010.9
303NN56710

Document finisher Installation Guide

DF-470 DOCUMENT FINISHER , AK-470 ATTACHMENT KIT

for

Black & White MFP 25/30

Color MFP 20/25

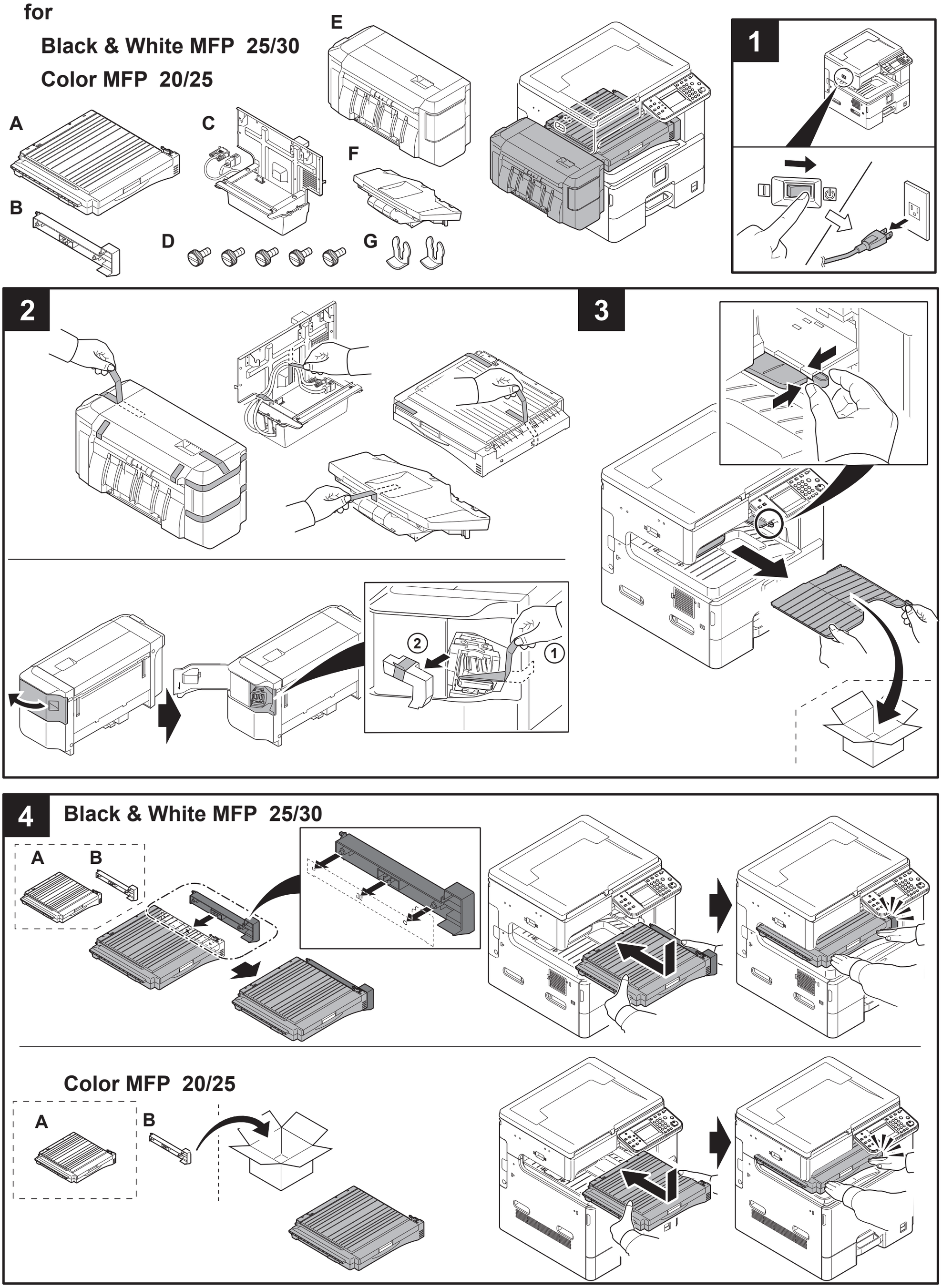

2010.9
305JS56710

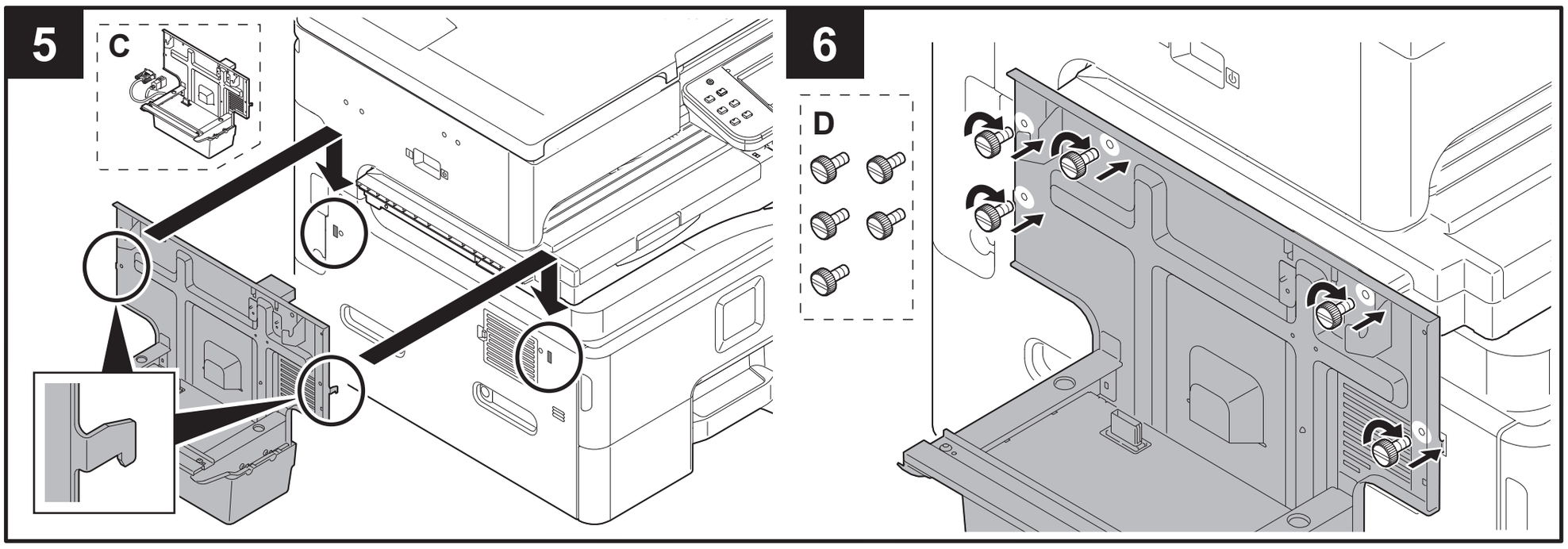

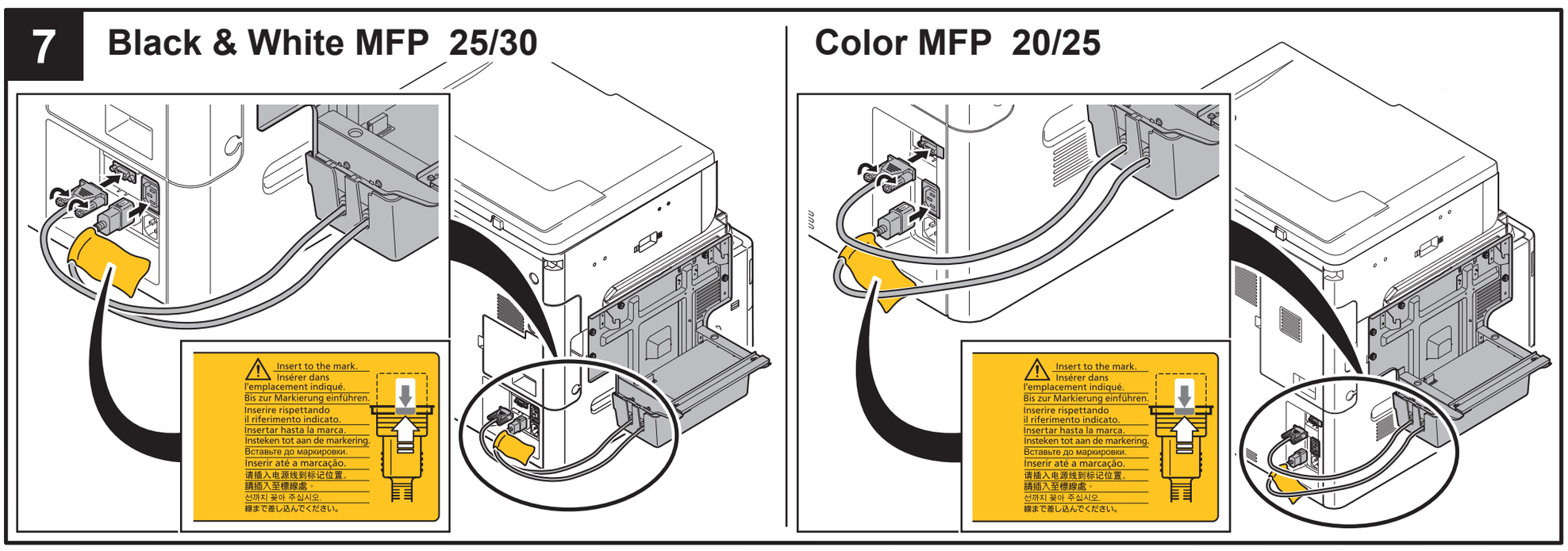

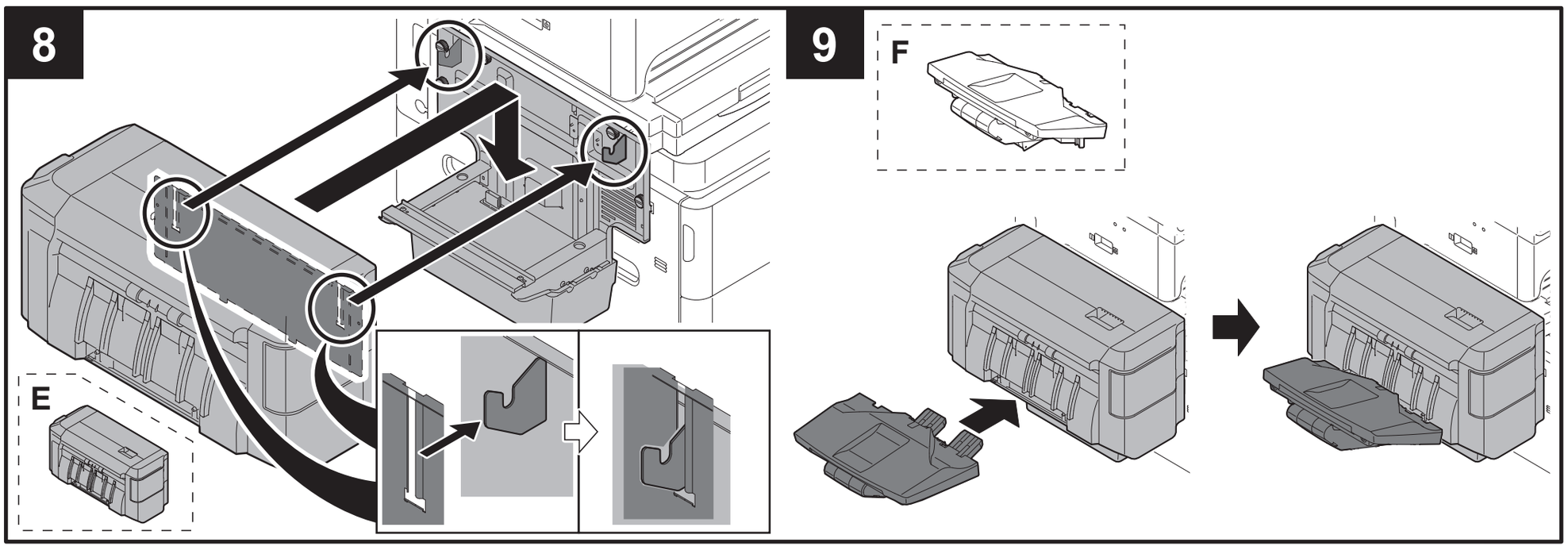

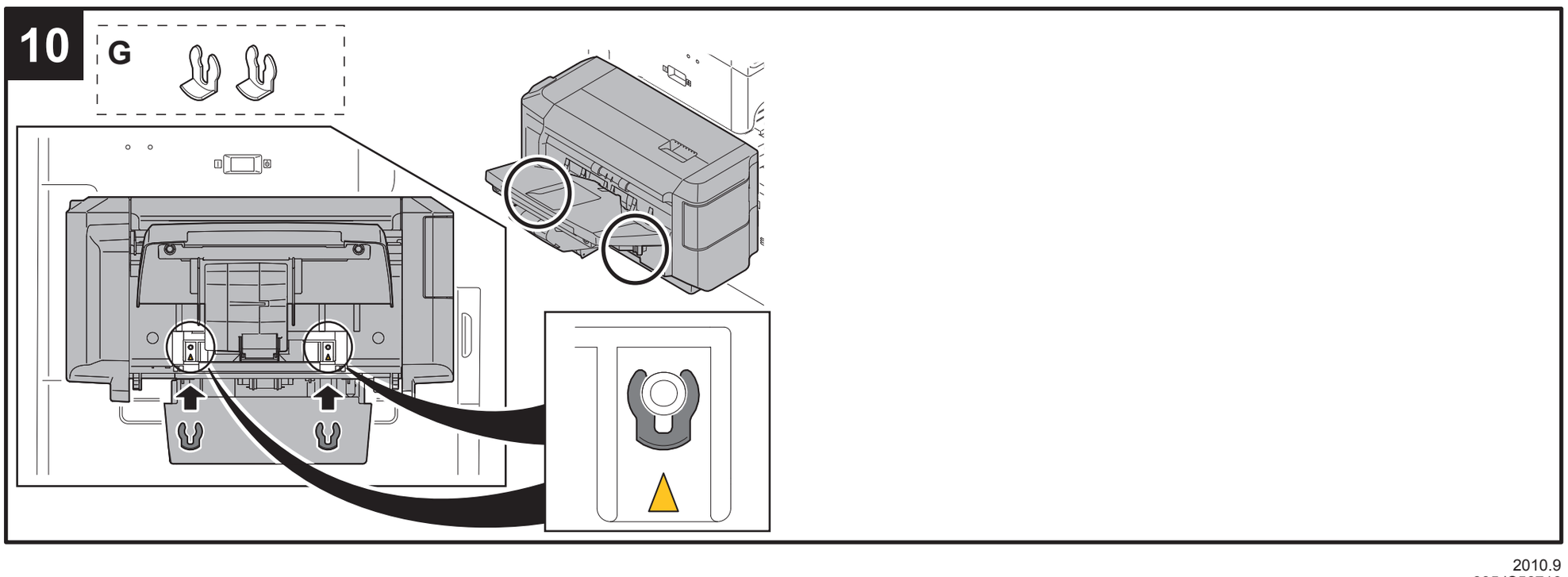

2010.9
305JS56710

FAX System(U)
Installation Guide

FAX System(U)

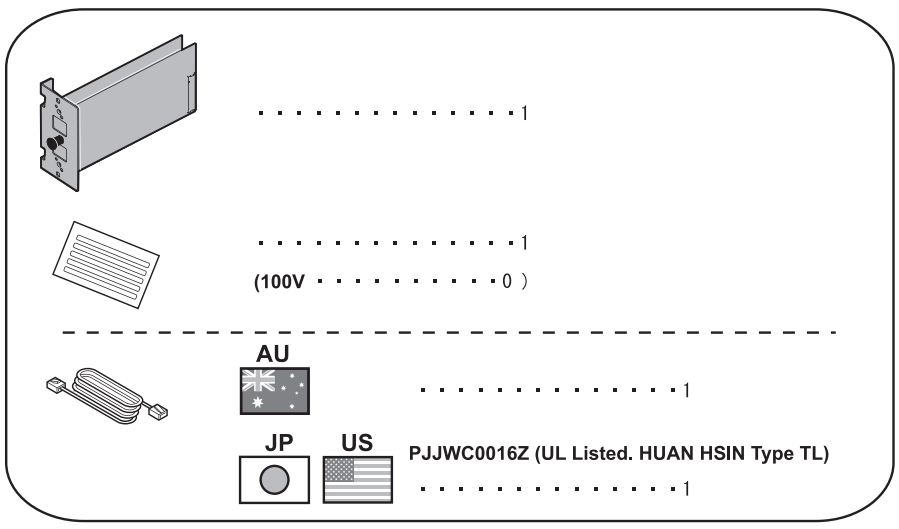

Black & White MFP 25/30

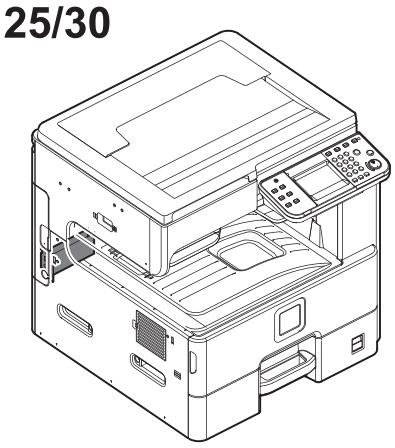

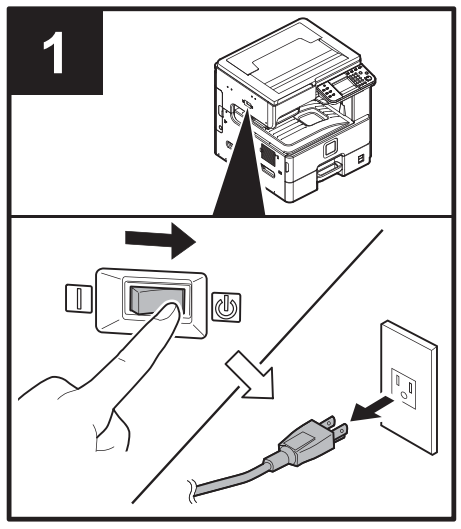

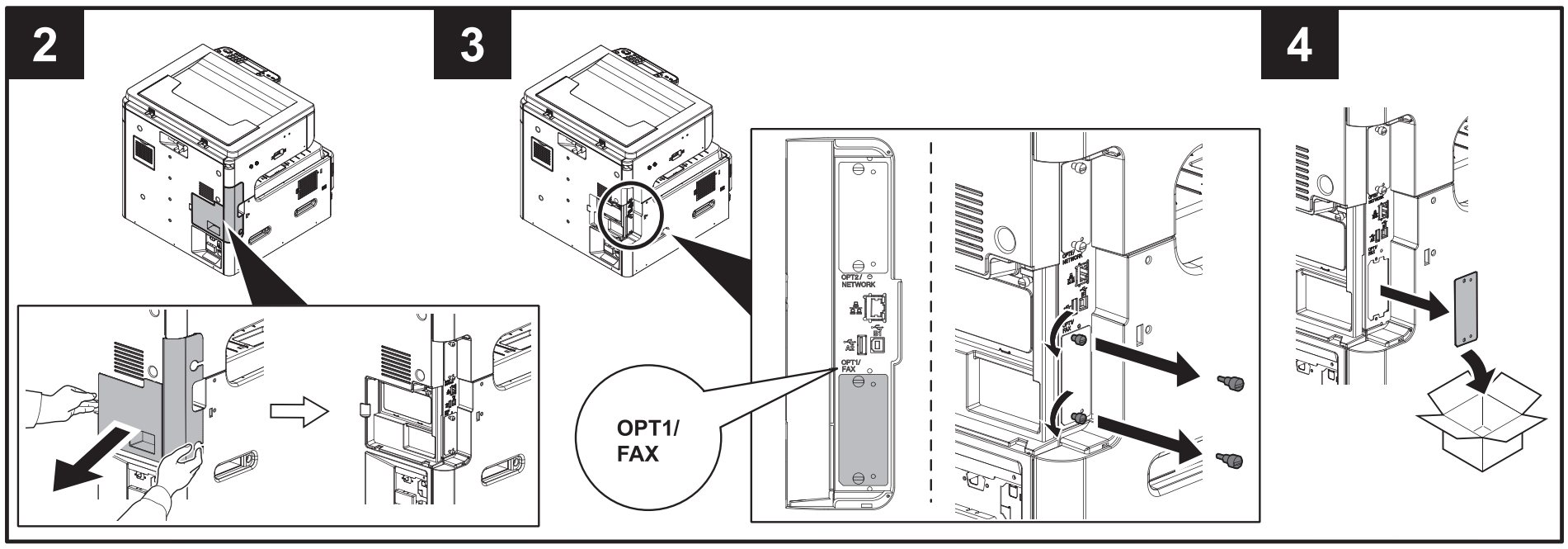

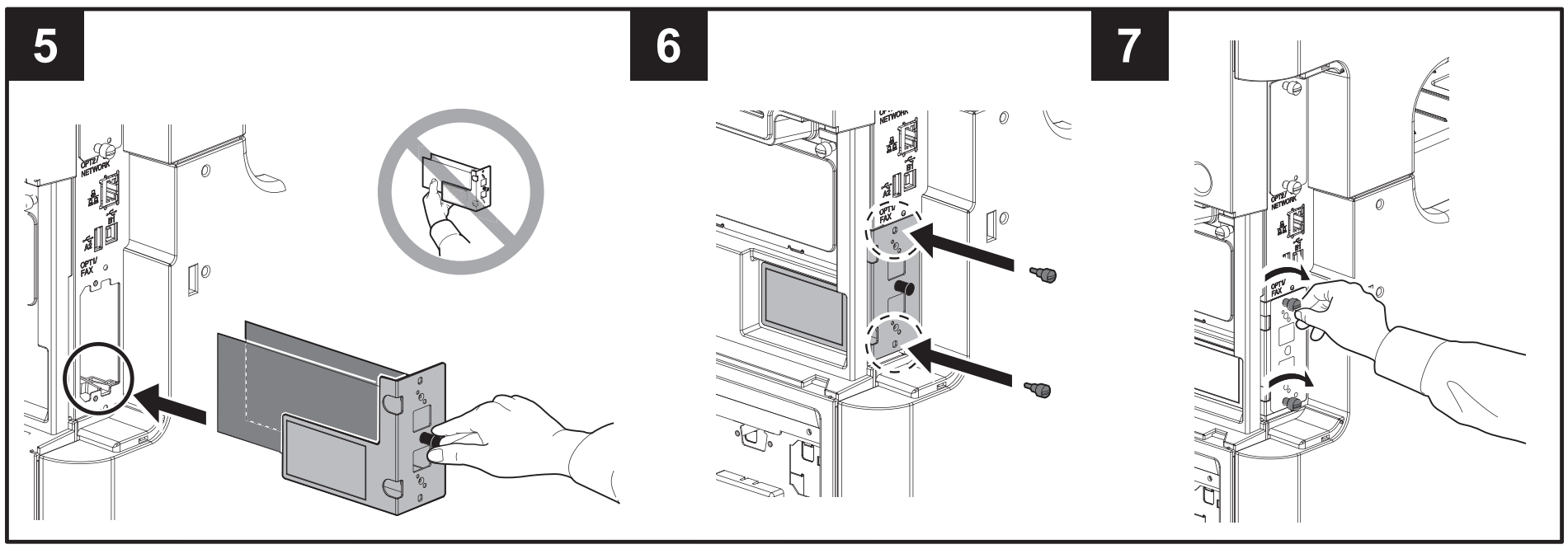

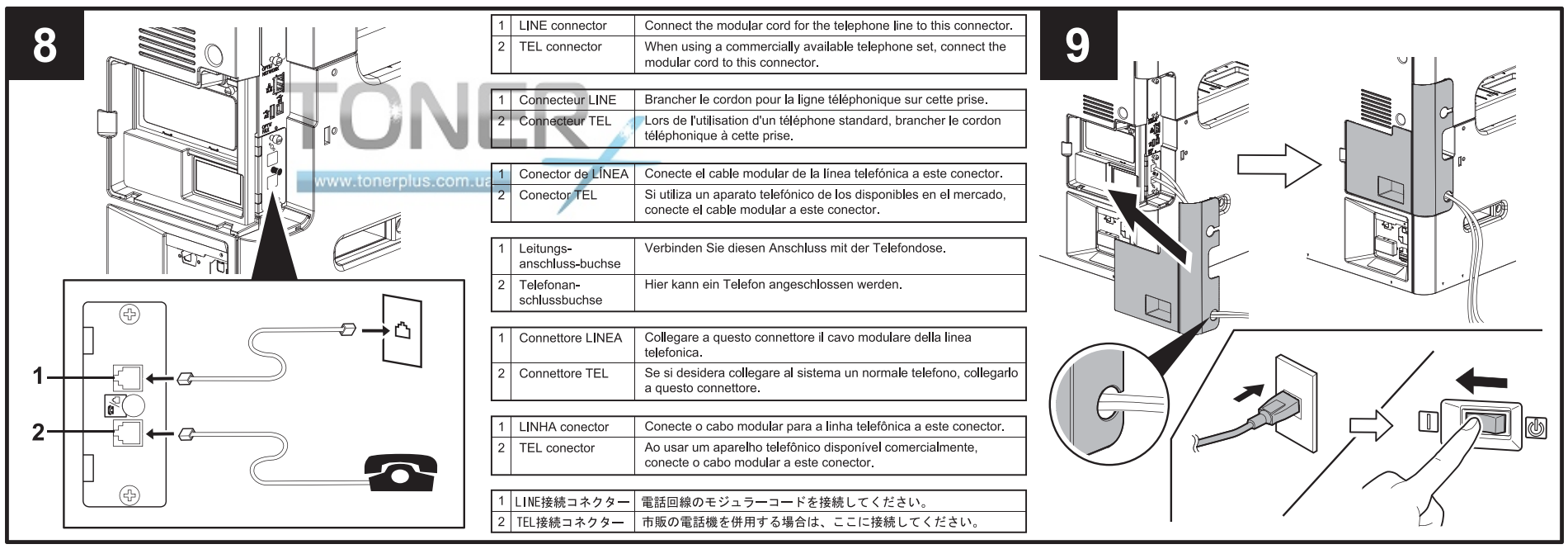

1	LINE connector	Connect the modular cord for the telephone line to this connector.
2	TEL connector	When using a commercially available telephone set, connect the modular cord to this connector.

1	Connecteur LINE	Brancher le cordon pour la ligne téléphonique sur cette prise.
2	Connecteur TEL	Lors de l'utilisation d'un téléphone standard, brancher le cordon téléphonique à cette prise.

1	Conector de LÍNEA	Conecte el cable modular de la línea telefónica a este conector.
2	Conector TEL	Si utiliza un aparato telefónico de los disponibles en el mercado, conecte el cable modular a este conector.

1	Leitungs-anschluss-buchse	Verbinden Sie diesen Anschluss mit der Telefondose.
2	Telefonan-schlussbuchse	Hier kann ein Telefon angeschlossen werden.

1	Connettore LINEA	Collegare a questo connettore il cavo modulare della linea telefonica.
2	Connettore TEL	Se si desidera collegare al sistema un normale telefono, collegarlo a questo connettore.

1	LINHA conector	Conecte o cabo modular para a linha telefônica a este conector.
2	TEL conector	Ao usar um aparelho telefônico disponível comercialmente, conecte o cabo modular a este conector.

1	LINE接続コネクター	電話回線のモジュラーコードを接続してください。
2	TEL接続コネクター	市販の電話機を併用する場合は、ここに接続してください。

2010.9
305JR56710

FAX Setup Wizard

ENG

The machine provides Quick Setup Wizard in System Menu to set the FAX. Follow the instructions on the operation panel.

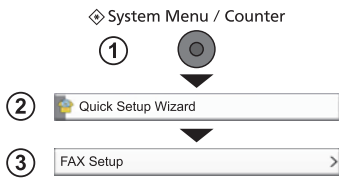

BR

A máquina fornece o Assistente de Configuração Rápida no Menu de Sistema para configurar o FAX. Siga as instruções no painel de operação.

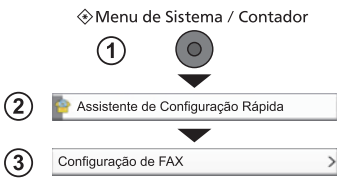

CZ

V systémové nabídce zařízení najdete Průvodce rychlým nastavením, pomocí něhož můžete nastavit FAX. Postupujte podle pokynů na provozním panelu.

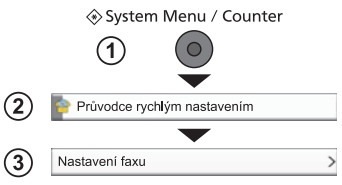

DE

Die Maschine bietet den Schnelleinstieg Wizard im Systemmenü an, um das Fax einzustellen: Folgen Sie den Anweisungen auf dem Bedienfeld.

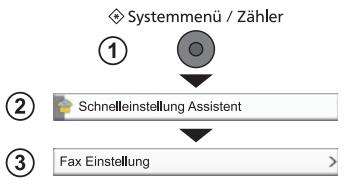

DK

Maskinen indeholder en Guide til hurtig opsætning i System menuen til indstilling af faxen. Følg anvisningerne på betjeningspanelet.

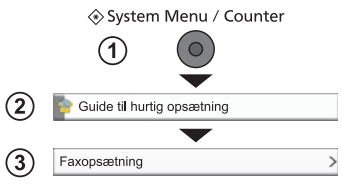

ES

La máquina dispone del Asistente de configuración rápida en el Menú Sistema para configurar el fax. Siga las instrucciones del panel de controles.

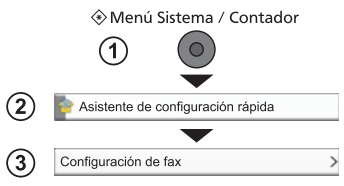

FI

Laitteen Järjestelmä-valikossa on ohjattu pika-asennustoiminto faksin asetusta varten. Noudata käyttöpaneelin ohjeita.

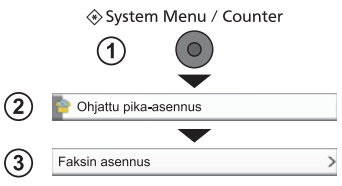

FR

L'appareil prévoit un Assistant de configuration rapide dans le menu système pour régler les paramètres du fax. Suivez les instructions sur le panneau de commande.

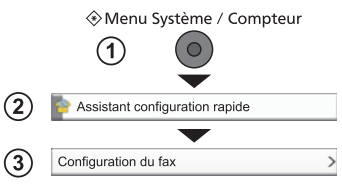

GR

Το μηχάνημα διαθέτει έναν Οδηγό Γρήγορης Εγκατάστασης στο Μενού Συστήματος για τη ρύθμιση του ΦΑΞ. Ακολουθήστε τις οδηγίες που εμφανίζονται στον πίνακα λειτουργίας.

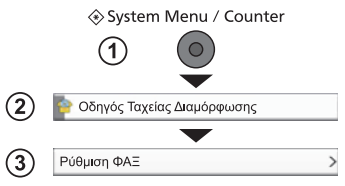

HEB

המכשיר מספק אשף הגדרה מהירה בתפריט המערכת, להגדרת הפקס.
פעל לפי ההוראות המופיעות בלוח המפעיל.

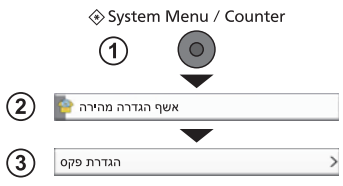

HU

A rendszermenüben a gyorstelepítő varázsló lehetővé teszi a FAX beállítását. Kövesse a kezelőpulton megjelenő utasításokat.

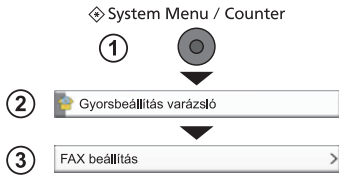

IT

È possibile utilizzare la procedura guidata di installazione rapida reperibile nel Menu Sistema per la configurazione del modulo FAX. Attenersi alle istruzioni visualizzate sul pannello comandi.

NL

In het Systeemmenu van het apparaat bevindt zich de wizard Snel installeren om de fax in te stellen. Volg de instructies op het bedieningspaneel van de fax.

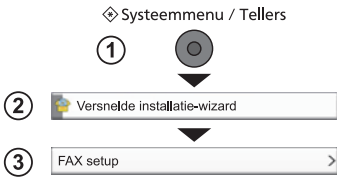

NO

Maskinen har en Hurtigoppsettveiviser i Systemmenyen til innstilling av faksen. Følg veiledningen på betjeningspanelet.

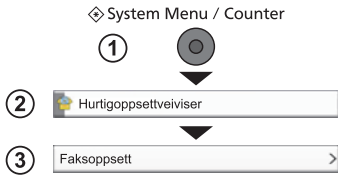

PL

W menu systemowym urządzenia dostępny jest Przewodnik szybkiej instalacj, który pozwoli ustawić funkcję FAKSU. Wykonuj instrukcje z panelu operacyjnego.

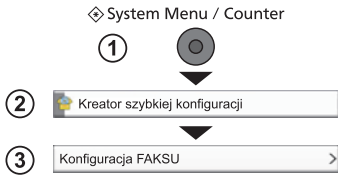

PT

A máquina proporciona o Assistente de Configuração Rápida no Menu do Sistema para definir o FAX. Siga as instruções no painel de funcionamento.

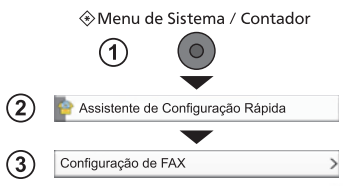

RO

Echipamentul are un expert de configurare rapidă în meniul Sistem pentru configurarea faxului.Urmați instrucțiunile din panoul de utilizare.

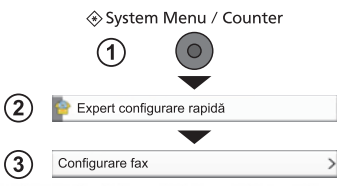

RU

Аппарат позволяет запустить мастер быстрой установки из системного меню для настройки факса. Выполните инструкции на панели управления.

SV

Maskinen har en snabbstartguide i systemmenyn för att ställa in faxen: Följ instruktionerna som anges på kontrollpanelen.

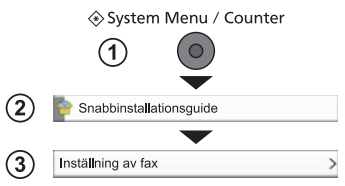

TR

Cihaz FAKS ayarlamak için Sistem Menüsünde Hızlı Kurulum Sihirbazı sunar. İşletim panosundaki talimatları izleyin.

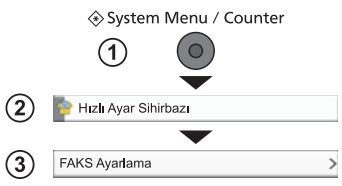

ARA

يوفر الجهاز معالج الإعداد السريع في قائمة النظام لإعداد الفاكس.
اتبع التعليمات الموجودة على لوحة التشغيل.

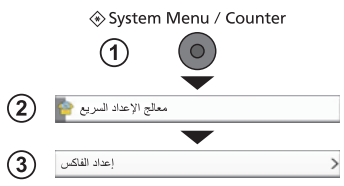

CN

可通过机器系统菜单中的快速设置向导设置传真。请遵循操作面板上的指导说明。

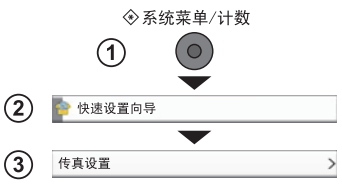

TW

可透過系統選單中的快速設定精靈進行傳真設定。請依照操作面板上的指示說明。

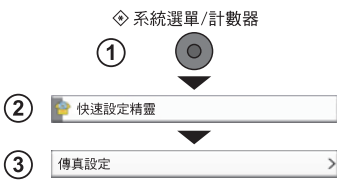

KO

기기의 시스템 메뉴에서 팩스를 설정할 수 있도록 빠른 설정 마법사를 제공합니다.조작 패널에 표시된 지침을 따르십시오.

JP

本機は、システムメニューに簡単セットアップウィザードを搭載しております。画面にしたがってファクスを設定してください。

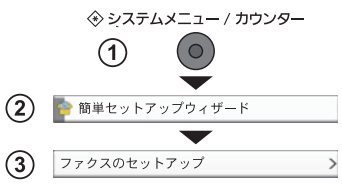

2010.9
305JR56710

KYOCERA MITA EUROPE B.V.

Bloemlaan 4, 2132 NP Hoofddorp,
The Netherlands
Phone: +31.20.654.0000
Home page: http://www.kyoceramita-europe.com
Email: info@kyoceramita-europe.com

KYOCERA MITA NEDERLAND B.V.
Beechavenue 25, 1119 RA Schiphol-Rijk
The Netherlands
Phone: +31.20.58.77.200

KYOCERA MITA (UK) LTD
8 Beacontree Plaza
Gillette Way Reading Berks RG2 0BS,
U.K.
Phone: +44.1189.311.500

KYOCERA MITA ITALIA S.p.A.
Via G. Verdi, 89 / 91, 20063 Cernusco s/N
Milano, Italy
Phone: +39.02.92179.1

S.A. KYOCERA MITA BELGIUM N.V.
Sint-Martinusweg 199-201, 1930 Zaventem,
Belgium
Phone: +32.2.720.9270

KYOCERA MITA FRANCE S.A.
Espace Technologique de St Aubin
Route de l' Orme
91195 Gif-sur-Yvette CEDEX, France
Phone: +33.1.6985.2600

KYOCERA MITA ESPAÑA S.A.
Edificio Kyocera, Avda de Manacor No. 2,
28290 Las Matas (Madrid),
Spain
Phone: +34.91.631.8392

KYOCERA MITA FINLAND OY
Atomitie 5C, 00370 Helsinki,
Finland
Phone: +358.9.4780.5200

KYOCERA MITA (SCHWEIZ)
Hohlstrasse 614, 8048 Zürich
Switzerland
Phone: +41.44.908.4949

KYOCERA MITA DEUTSCHLAND GMBH
Otto-Hahn-Str. 12 D-40670 Meerbusch,
Germany
Phone: +49.2159.918.0

KYOCERA MITA GMBH AUSTRIA
Eduard-Kittenberger-Gasse 95,
1230 Wien,
Austria
Phone: +43.1.86338

KYOCERA MITA SVENSKA AB
Esbogatan 16B 164 75 Kista,
Sweden
Phone: +46.8.546.55000

KYOCERA MITA NORGE
Postboks 150 Oppsal, NO 0619 Oslo
Olaf Helsetsvei 6, NO 0694 Oslo,
Norway
Phone: +47.22.62.73.00

KYOCERA MITA DANMARK A/S
Ejby Industrivej 60, DK-2600 Glostrup,
Denmark
Phone: +45.7022.3880

KYOCERA MITA PORTUGAL LDA.
Rua do Centro Cultural, 41 (Alvalade) 1700-106 Lisboa,
Portugal
Phone: +351.21.843.6780

KYOCERA MITA SOUTH AFRICA (PTY) LTD.
49 Kyalami Boulevard,
Kyalami Business Park Midrand,
South Africa
Phone: +27.(0)11.540.2600

KYOCERA MITA AMERICA, INC.

Headquarters:
225 Sand Road,
Fairfield, New Jersey 07004-0008,
U.S.A.
Phone: (973) 808-8444

KYOCERA MITA AUSTRALIA PTY. LTD.
Level 3, 6-10 Talavera Road, North Ryde,
N.S.W. 2113 Australia
Phone: (02) 9888-9999

KYOCERA MITA NEW ZEALAND LTD.
1-3 Parkhead Place, Albany
P.O. Box 302 125 NHPC, Auckland,
New Zealand
Phone: (09) 415-4517

KYOCERA MITA Asia Limited

16/F., Mita Centre,
552-566, Castle Peak Road,
Tsuen Wan, New Territories, Hong Kong
Phone: (852)-2610-2181

KYOCERA MITA Corporation

2-28, 1-chome, Tamatsukuri, Chuo-ku
Osaka 540-8585, Japan
Phone: (06) 6764-3555
http://www.kyoceramita.com

KYOCERA MITA AMERICA, INC.

Headquarters:
225 Sand Road,
Fairfield, New Jersey 07004-0008
TEL : (973) 808-8444
FAX : (973) 882-6000

New York Branch:
30-30 47th Avenue
Long Island City, NY 11101
TEL : (718) 289-2500
FAX : (718) 289-2501

Northeastern Region:
225 Sand Road,
Fairfield, New Jersey 07004-0008
TEL : (973) 808-8444
FAX : (973) 882-4401

Midwestern Region:
201 Hansen Court Suite 119
Wood Dale, Illinois 60191
TEL : (630) 238-9982
FAX : (630) 238-9487

Western Region:
14101 Alton Parkway,
Irvine, California 92618-7006
TEL : (949) 457-9000
FAX : (949) 457-9119

Southeastern Region:
3100 Breckinridge Blvd. NW Building 100,
Suite 105 Duluth, Georgia 30096
TEL : (770) 729-9786
FAX : (770) 729-9873

Southwestern Region:
2825 West Story Road,
Irving, Texas 75038-5299
TEL : (972) 550-8987
FAX : (972) 570-4704

National Operation Center
& National Training Center:
2825 West Story Road,
Irving, Texas 75038-5299
TEL : (972) 659-0055
FAX : (972) 570-5816

Latin America Division:
8240 N.W. 52nd. Terrace Dawson Building,
Suite 108 Miami, Florida 33166
TEL : (305) 421-6640
FAX : (305) 421-6666

KYOCERA MITA CANADA, LTD.

6120 Kestrel Road, Mississauga,
Ontario L5T 1S8, Canada
TEL : (905) 670-4425
FAX : (905) 670-8116

KYOCERA MITA MEXICO, S.A. DE C.V.

Av. 16 de Septiembre #407
Col. Santa Inés,
Azcapotzalco México,
D.F. 02130, México
TEL : (55) 5383-2741
FAX : (55) 5383-7804

KYOCERA MITA Brazil Ltda.

Av. Tambore, 1180 Mob.B-09 CEP 06460-000
Tambore-Barveri-SP,
Brazil
TEL : (55) 11-4195-8496
FAX : (55) 11-4195-6167

KYOCERA MITA Asia Limited

16/F., Mita Centre,
552-566, Castle Peak Road,
Tsuen Wan, New Territories, Hong Kong
Phone: (852)-2610-2181

KYOCERA MITA (Thailand) Corp., Ltd.
335 Ratchadapisek Road, Bangsue,
Bangkok, 10800, Thailand
Phone: (66)-2-586-0333

KYOCERA MITA Singapore Pte Ltd.
121 Genting Lane, 3rd Level,
Singapore 349572
Phone: (65)-6741-8733

KYOCERA MITA Hong Kong Limited
16/F., Mita Centre,
552-566, Castle Peak Road,
Tsuen Wan, New Territories,
Hong Kong
Phone: (852)-2429-7422

KYOCERA MITA Taiwan Corporation
6F., No.37, Sec. 3, Minquan E. Rd.,
Zhongshan Dist., Taipei 104, Taiwan R.O.C.
Phone: (886)-2-2507-6709

KYOCERA MITA Korea Co., Ltd.
18F, Kangnam bldg, 1321-1,
Seocho-Dong, Seocho-Gu, Seoul, Korea
Phone: (822)-6933-4050

KYOCERA MITA India Private Limited
First Floor, ORCHID CENTRE
Sector-53, Golf Course Road, Gurgaon 122
002, India
Phone: (91)-0124-4671000