KYOCERA

TASKalfa 2200/1800
DP-480/PF-480
/DU-480

SERVICE MANUAL

Published in September 2013
842NN110
2NNSM060
First Edition

TONER+
www.tonerplus.com.ua

CAUTION

RISK OF EXPLOSION IF BATTERY IS REPLACED BY AN INCORRECT TYPE. DISPOSE OF USED BATTERIES ACCORDING TO THE INSTRUCTIONS.

It may be illegal to dispose of this battery into the municipal waste stream. Check with your local solid waste officials for details in your area for proper disposal.

ATTENTION

IL Y A UN RISQUE D'EXPLOSION SI LA BATTERIE EST REMPLACEE PAR UN MODELE DE TYPE INCORRECT. METTRE AU REBUT LES BATTERIES UTILISEES SELON LES INSTRUCTIONS DONNEES.

Il peut être illégal de jeter les batteries dans des eaux d'égout municipales. Vérifiez avec les fonctionnaires municipaux de votre région pour les détails concernant des déchets solides et une mise au rebut appropriée.

Notation of products in the manual

For the purpose of this service manual, products are identified by print speed at A4.

TASKalfa 2200 :22 ppm model
TASKalfa 1800 :18 ppm model

TONER
www.tonerplus.com.ua

Revision history

Revision	Date	Pages	Revised contents

TONER
www.tonerplus.com.ua

This page is intentionally left blank.

TONER
www.tonerplus.com.ua

Safety precautions

This booklet provides safety warnings and precautions for our service personnel to ensure the safety of their customers, their machines as well as themselves during maintenance activities. Service personnel are advised to read this booklet carefully to familiarize themselves with the warnings and precautions described here before engaging in maintenance activities.

TONER
www.tonerplus.com.ua

Safety warnings and precautions

Various symbols are used to protect our service personnel and customers from physical danger and to prevent damage to their property. These symbols are described below:

⚠**DANGER:** High risk of serious bodily injury or death may result from insufficient attention to or incorrect compliance with warning messages using this symbol.

⚠**WARNING:** Serious bodily injury or death may result from insufficient attention to or incorrect compliance with warning messages using this symbol.

⚠**CAUTION:** Bodily injury or damage to property may result from insufficient attention to or incorrect compliance with warning messages using this symbol.

Symbols

The triangle (△) symbol indicates a warning including danger and caution. The specific point of attention is shown inside the symbol.

 General warning.  Warning of risk of electric shock.

 Warning of high temperature.

⃠ indicates a prohibited action. The specific prohibition is shown inside the symbol.

 General prohibited action.  Disassembly prohibited.

● indicates that action is required. The specific action required is shown inside the symbol.

 General action required.  Remove the power plug from the wall outlet.

 Always ground the copier.

TONER
www.tonerplus.com.ua

1. Installation Precautions

⚠ WARNING

- Do not use a power supply with a voltage other than that specified. Avoid multiple connections to one outlet: they may cause fire or electric shock. When using an extension cable, always check that it is adequate for the rated current. .....
- Connect the ground wire to a suitable grounding point. Not grounding the copier may cause fire or electric shock. Connecting the earth wire to an object not approved for the purpose may cause explosion or electric shock. Never connect the ground cable to any of the following: gas pipes, lightning rods, ground cables for telephone lines and water pipes or faucets not approved by the proper authorities. .....

⚠ CAUTION:

- Do not place the copier on an infirm or angled surface: the copier may tip over, causing injury. .....
- Do not install the copier in a humid or dusty place. This may cause fire or electric shock. .....
- Do not install the copier near a radiator, heater, other heat source or near flammable material. This may cause fire. .....
- Allow sufficient space around the copier to allow the ventilation grills to keep the machine as cool as possible. Insufficient ventilation may cause heat buildup and poor copying performance. .....
- Always handle the machine by the correct locations when moving it. .....
- Always use anti-toppling and locking devices on copiers so equipped. Failure to do this may cause the copier to move unexpectedly or topple, leading to injury. .....
- Avoid inhaling toner or developer excessively. Protect the eyes. If toner or developer is accidentally ingested, drink a lot of water to dilute it in the stomach and obtain medical attention immediately. If it gets into the eyes, rinse immediately with copious amounts of water and obtain medical attention. .....
- Advice customers that they must always follow the safety warnings and precautions in the copier's instruction handbook. .....

TONER
www.tonerplus.com.ua

2. Precautions for Maintenance

WARNING

- Always remove the power plug from the wall outlet before starting machine disassembly. .....
- Always follow the procedures for maintenance described in the service manual and other related brochures. .....
- Under no circumstances attempt to bypass or disable safety features including safety mechanisms and protective circuits. .....
- Always use parts having the correct specifications. .....
- Always use the thermostat or thermal fuse specified in the service manual or other related brochure when replacing them. Using a piece of wire, for example, could lead to fire or other serious accident. .....
- When the service manual or other serious brochure specifies a distance or gap for installation of a part, always use the correct scale and measure carefully. .....
- Always check that the copier is correctly connected to an outlet with a ground connection. .....
- Check that the power cable covering is free of damage. Check that the power plug is dust-free. If it is dirty, clean it to remove the risk of fire or electric shock. .....
- Never attempt to disassemble the optical unit in machines using lasers. Leaking laser light may damage eyesight. .....
- Handle the charger sections with care. They are charged to high potentials and may cause electric shock if handled improperly. .....

CAUTION

- Wear safe clothing. If wearing loose clothing or accessories such as ties, make sure they are safely secured so they will not be caught in rotating sections. .....
- Use utmost caution when working on a powered machine. Keep away from chains and belts. .....
- Handle the fixing section with care to avoid burns as it can be extremely hot. .....
- Check that the fixing unit thermistor, heat and press rollers are clean. Dirt on them can cause abnormally high temperatures. .....

TONER
www.tonerplus.com.ua

- Do not remove the ozone filter, if any, from the copier except for routine replacement. .....
- Do not pull on the AC power cord or connector wires on high-voltage components when removing them; always hold the plug itself. .....
- Do not route the power cable where it may be stood on or trapped. If necessary, protect it with a cable cover or other appropriate item. .....
- Treat the ends of the wire carefully when installing a new charger wire to avoid electric leaks. .....
- Remove toner completely from electronic components. .....
- Run wire harnesses carefully so that wires will not be trapped or damaged. .....
- After maintenance, always check that all the parts, screws, connectors and wires that were removed, have been refitted correctly. Special attention should be paid to any forgotten connector, trapped wire and missing screws. .....
- Check that all the caution labels that should be present on the machine according to the instruction handbook are clean and not peeling. Replace with new ones if necessary. .....
- Handle greases and solvents with care by following the instructions below: .....
  · Use only a small amount of solvent at a time, being careful not to spill. Wipe spills off completely.
  · Ventilate the room well while using grease or solvents.
  · Allow applied solvents to evaporate completely before refitting the covers or turning the power switch on.
  · Always wash hands afterwards.
- Never dispose of toner or toner bottles in fire. Toner may cause sparks when exposed directly to fire in a furnace, etc. .....
- Should smoke be seen coming from the copier, remove the power plug from the wall outlet immediately. .....

3. Miscellaneous

WARNING

- Never attempt to heat the drum or expose it to any organic solvents such as alcohol, other than the specified refiner; it may generate toxic gas. .....
- Keep the machine away from flammable liquids, gases, and aerosols. A fire or an electric shock might occur. .....

TONER
www.tonerplus.com.ua

This page is intentionally left blank.

TONER
www.tonerplus.com.ua

CONTENTS

1-1 Specifications

1-1-1 Specifications 1-1-1
(1) Main unit 1-1-1
(2) Document processor (DP-480) (Option) 1-1-4
(3) Paper Feeder (PF-480) (Option) 1-1-5
(4) Duplex Unit (DU-480) (Option) 1-1-5
1-1-2 Parts names 1-1-6
(1) Parts names 1-1-6
(2) Option 1-1-8
(3) Operation panel 1-1-9
1-1-3 Machine cross section 1-1-10
1-1-4 Option composition 1-1-11

1-2 Installation

1-2-1 Installation environment 1-2-1
1-2-2 Unpacking and installation 1-2-2
(1) Installation procedure 1-2-2
1-2-3 Installing an accessories option 1-2-18
(1) Installing the SD card. 1-2-18
(2) Installing the key counter (option) 1-2-19
(3) Install the cassette heater 1-2-25

1-3 Maintenance Mode

(1) Executing a maintenance item 1-3-1
(2) Maintenance modes item list 1-3-2
(3) Contents of the maintenance mode items 1-3-6

1-4 Troubleshooting

1-4-1 Paper misfeed detection 1-4-1
(1) Paper misfeed indication 1-4-1
(2) Paper misfeed detection condition 1-4-2
1-4-2 Troubleshooting 1-4-6
(1) First check items 1-4-6
(2) Items and corrective actions relating to the device that will cause paper jam 1-4-10
(3) Paper jam at feeding from cassette 1
Electrical parts that could cause paper jam during paper travelling
at the primary feeding (to regist roller) 1-4-14
(4) Paper jam at feeding from cassette 2 (paper feerder)
Electrical parts that could cause paper jam during paper travelling
at the primary feeding (to regist roller) 1-4-15
(5) Paper jam during manual feeding
Electrical parts that could cause paper jam during paper travelling
at the primary feeding (to regist roller) 1-4-16
(6) Paper jam at the duplex re-feeding part
Electrical parts that could cause paper jam during paper travelling
at the primary feeding (to regist roller) 1-4-17
(7) Electrical parts that could cause paper jam at the transfer ,
the fuser and the eject parts 1-4-18

TONER
www.tonerplus.com.ua

1-4-3 Self-diagnostic function 1-4-19
(1) Self-diagnostic function 1-4-19
(2) Self diagnostic codes 1-4-20
1-4-4 Image formation problems 1-4-36
1-4-5 Poor image (due to DP and scanner reading) 1-4-37
(1) No image appears (entirely white). 1-4-38
(2) No image appears (entirely black). 1-4-40
(3) Image is too light. 1-4-41
(4) The background is colored. 1-4-43
(5) White streaks are printed vertically. 1-4-45
(6) Black streaks appear longitudinally. 1-4-47
(7) Streaks are printed horizontally. 1-4-49
(8) One side of the print image is darker or brighter than the other. 1-4-51
(9) Black dots appear on the image. 1-4-53
(10) Image is blurred. 1-4-54
(11) The leading edge of the image is consistently misaligned with the original. 1-4-56
(12) Part of image is missing. 1-4-57
(13) Image is out of focus. 1-4-59
(14) Image center does not align with the original center. 1-4-61
(15) Moires 1-4-62
(16) Skewed image 1-4-63
(17) Abnormal image 1-4-65
1-4-6 Poor image (Image rendering problems: printer engine 1-4-66
(1) No image appears (entirely white). 1-4-68
(2) No image appears (entirely black). 1-4-69
(3) Image is too light. 1-4-70
(4) The background is colored. 1-4-72
(5) White streaks are printed vertically. 1-4-74
(6) Black streaks appear longitudinally. 1-4-75
(7) Black or white streaks appear horizontally. 1-4-76
(8) Uneven density longitudinally. 1-4-77
(9) Uneven density horizontally. 1-4-78
(10) Black dots appear on the image. 1-4-79
(11) Offset occurs. 1-4-80
(12) Image is partly missing. 1-4-81
(13) Image is out of focus. 1-4-82
(14) Poor grayscale reproducibility. 1-4-82
(15) Unevenly repeating horizontal streaks in the printed objects.
Spots in the printed objects. 1-4-83
(16) mage is blurred (Shifted transferring). 1-4-84
(17) The leading edge of the image is consistently misaligned with the original. 1-4-85
(18) The leading edge of the image is sporadically misaligned with the original. 1-4-86
(19) Paper is wrinkled. 1-4-86
(20) Fusing is loose. 1-4-87
(21) Image center does not align with the original center. 1-4-88
(22) Dirty paper edges with toner. 1-4-88
(23) Dirty reverse side of paper. 1-4-89
1-4-7 Electric problems 1-4-90
1-4-8 Mechanical problems 1-4-93

TONER
www.tonerplus.com.ua

1-5 Sectional Construction

1-5-1 Precautions for assembly and disassembly 1-5-1
(1) Precautions 1-5-1
(2) Drum unit 1-5-1
(3) Toner 1-5-1
(4) How to tell a genuine Kyocera toner container 1-5-2
1-5-2 Paper feed / conveying section 1-5-3
(1) Cassette paper feed section 1-5-3
(1-1) Detaching and refitting the primary paper feed unit and the pickup roller 1-5-5
(1-2) Detaching and refitting the retard roller 1-5-8
(1-3) Detaching and refitting the registration cleaner 1-5-10
(2) MP tray paper feed section 1-5-12
(2-1) Detaching and refitting the MP paper feed roller 1-5-14
1-5-3 Optical section 1-5-15
(1) Image scanner section 1-5-15
(1-1) Detaching and refitting the exposure lamp 1-5-17
(1-2) Detaching and refitting the image scanner unit 1-5-21
(2) Laser scanner section 1-5-25
(2-1) Detaching and refitting the laser scanner unit 1-5-27
1-5-4 Developer section 1-5-35
(1) Detaching and refitting the developer unit 1-5-36
1-5-5 Drum section 1-5-39
(1) Detaching and refitting the drum unit 1-5-41
1-5-6 Transfer/Separation section 1-5-43
(1) Detaching and refitting the transfer roller 1-5-45
(2) Detaching and refitting the separation needle holder 1-5-46
1-5-7 Fuser and eject/feedshift section 1-5-47
(1) Detaching and refitting the fuser unit 1-5-49
1-5-8 Duplex conveying section (option) 1-5-51
(1) Detaching and refitting the duplex conveying unit 1-5-53
1-5-9 Drive section 1-5-55
(1) Detaching and refitting the drive unit 1-5-57
1-5-10 Othes 1-5-74
(1) Detaching and refitting the rear cover 1-5-74
(2) Detaching and refitting the rear sub cover 1-5-74
(3) Detaching and refitting the right upper cover 1-5-75
(4) Detaching and refitting the right rear cover 1-5-76
(5) Detaching and refitting the front upper cover 1-5-76
(6) Detaching and refitting the left cover 1-5-77
(7) Detaching and refitting the front left cover 1-5-77
(8) Detaching and refitting the left tray and right tray 1-5-78
(9) Detaching and refitting the exit rear cover 1-5-79
(10) Detaching and refitting the middle rear cover 1-5-79
(11) Detaching and refitting the inner cover 1-5-80
(12) Detaching and refitting the language sheets 1-5-81
(13) Detaching and refitting the operation panel assembly 1-5-82
(14) Detaching and refitting the cooling fan 1-5-83
(15) Direction of installing the principal fan motors 1-5-83

TONER
www.tonerplus.com.ua

1-5-11 Document processer (option) 1-5-84
(1) Original feed section 1-5-84
(1-1) Detaching and refitting the document processer 1-5-86
(1-2) Detaching and refitting the DP paper feed roller and DP separation pulley 1-5-87
(1-3) Detaching and refitting the DP ragistration clutch 1-5-90
(1-4) Detaching and refitting the drive motors 1-5-91
(2) Original conveying section 1-5-92
(3) Original switchback/eject sections 1-5-94
1-5-12 Paper feeder (option) 1-5-96
(1) Detaching and refitting the PF feed motor 1-5-98
(2) Detaching and refitting the PF feed clutch 1-5-100
(3) Detaching and refitting the paper feed holder 1-5-101
(4) Detaching and refitting the retard roller holder 1-5-103

2-1 Electrical Parts Layout

2-1-1 PWBs 2-1-1
2-1-2 Switches and sensors 2-1-3
2-1-3 Motors 2-1-5
2-1-4 Others 2-1-7

2-2 Operation of the PWBs

2-2-1 Upgrading the firmware 2-2-1
2-2-2 Main/Engine PWB (M/EPWB) 2-2-3
(1) Connector position 2-2-3
(2) PWB photograph 2-2-3
(3) Connector lists 2-2-4
(4) Detaching and refitting the PWB. (M/EPWB) 2-2-10
(5) Remarks on main/engine PWB replacement 2-2-12
2-2-3 High voltage PWB(HVPWB) 2-2-14
(1) Connector position 2-2-14
(2) PWB photograph 2-2-14
(3) Connector lists 2-2-15
(4) Detaching and refitting the PWB. (HVPWB) 2-2-16
2-2-4 Power source PWB (PSPWB) 2-2-23
(1) Connector position 2-2-23
(2) PWB photograph 2-2-23
(3) Connector lists 2-2-24
(4) Detaching and refitting the PWB. (PSPWB) 2-2-25
2-2-5 Operation panel PWB (OPPWB) 2-2-27
(1) Connector position 2-2-27
(2) PWB photograph 2-2-27
(3) Connector lists 2-2-28
(4) Detaching and refitting the PWB. (OPPWB) 2-2-29
2-2-6 DP main PWB (DPMPWB) 2-2-31
(1) Connector position 2-2-31
(2) PWB photograph 2-2-31
(3) Connector lists 2-2-32
(4) Detaching and refitting the PWB. (DPMPWB) 2-2-34
(5) Remarks on DP main PWB replacement 2-2-36

TONER
www.tonerplus.com.ua

2-2-7 PF main PWB (PFMPWB) 2-2-37
(1) Connector position 2-2-37
(2) PWB photograph 2-2-37
(3) Connector lists 2-2-38
(4) Detaching and refitting the PWB. (PFMPWB) 2-2-40

2-3 Appendixes

2-3-1 Appendixes 2-3-1
(1) List of maintenance parts 2-3-1
(2) Maintenance kits 2-3-2
(3) Repetitive defects gauge 2-3-3
(4) Chart of image adjustment procedures 2-3-5
(5) Wiring diagram 2-3-8

Installation Guide

DP-480 (Document processor)
PF-480 (300-sheet Paper feeder)
DU-480 (duplex unit)

TONER
www.tonerplus.com.ua

This page is intentionally left blank.

TONER
www.tonerplus.com.ua

1-1-1 Specifications

(1) Main unit

Item		Description	
		18 ppm	22 ppm
Type		Desktop	
Printing Method		Electrophotography by semiconductor laser, single drum system	
Paper Weight	**Cassette**	64 to 105 g/m2	
	Multi Purpose Tray	45 to 160 g/m2, 230 g/m2 (Cardstock)	
Paper Type	**Cassette**	Plain, Rough, Vellum, Recycled, Preprinted, Bond, Color (Colour), Prepunched, Letterhead, Thick, High Quality, Custom 1 to 8	
	Multi Purpose Tray	Plain, Transparency (OHP film), Rough, Vellum, Labels, Recycled, Preprinted, Bond, Cardstock, Color (Colour), Prepunched, Letterhead, Envelope, Thick, High Quality, Custom 1 to 8	
Paper Size	**Cassette**	A3, B4, A4, A4-R, B5, B5-R, A5-R, Ledger, Legal, Oficio II, Letter-R, Letter, Statement-R, Folio, 8K, 16K, 16K-R, 216 × 340 mm	
	Multi Purpose Tray	A3, B4, A4, A4-R, B5, B5 (ISO), B5-R, A5-R, B6-R, A6-R, Oufuku hagaki, Hagaki, Envelope DL, Envelope C5, Envelope C4, Envelope #10, Envelope #9, Envelope #6 3/4, Envelope Monarch, Youkei 2, Youkei 4, Ledger, Legal, Oficio II, Letter, Letter-R, Statement-R, Executive, Folio, 216 × 340 mm, 8K, 16K, 16K-R, Size Entry (Metric: X; 148 to 432 mm (in 1 mm increments), Y; 98 to 297 mm (in 1 mm increments), Inch: X; 5.83 to 17.00" (in 0.01" increments), Y; 3.86 to 11.69" (in 0.01" increments))	
Warm-up Time (22°C/ 71.6°F, 60%)	**Power on**	17.2 seconds or less	
	Sleep	11 seconds or less	
Paper Capacity	**Cassette**	300 sheets (80 g/m2)	
	Multi Purpose Tray	A4/Letter or less: 100 sheets (80 g/m2) More than A4/Letter: 25 sheets (80 g/m2)	
Output Tray Capacity		250 sheets (80 g/m2)	
Photoconductor		OPC drum (diameter 30 mm)	
Image Write System		Semiconductor laser and electrophotography	
Charging system		Contact charger roller method	
Developer system		Mono component dry developing method Toner replenishing: Automatic from the toner container	
Transfer system		Transfer roller method	
Separation system		Small diameter separation, separation needle	
Cleaning system		Counter blade cleaning + cleaning roller	
Charge erasing system		Exposure by cleaning lamp (LED)	

TONER
www.tonerplus.com.ua

Item		Description	
		18 ppm	**22 ppm**
Fusing system		Heat and pressure fusing with the heat roller and the press roller Heat source: halogen heater Abnormally high temperature protection devices: thermostat	
Operating Environ-ment	**Temperature**	10 to 32.5°C/50 to 90.5°F	
	Humidity	15 to 80 %	
	Altitude	3,500 m/11,482.8 ft maximum	
	Brightness	1,500 lux maximum	
CPU		An equivalent for an ARM v5 base core 500MHz	
Interface		USB Interface Connector: 1 (USB Hi-Speed) SD card interface: 1	
Main Memory		256 MB	
Dimension (W × D × H)		22 1/4 × 20 3/4 × 18 7/8" 565 × 527 × 480 mm	
Weight		55 lbs or less/25 kg or less	
Power Source		120 V Specification Model: 120 V 60 Hz 12.0 A 230 V Specification Model: 220-240 V 50/60 Hz 6.3 A	
Option		Document processer DP-480 Papre feeder PF-480 Duplex unit DU-480 Platen cover (type H) Key counter	

TONER
www.tonerplus.com.ua

Copy function

Item		Description		
			18 ppm	22 ppm
Copy Speed	**feed from Cassette**	A4/Letter: A4-R/Letter-R: A3/Ledger: B4/Legal: B5: B5-R: A5-R:	18 sheets/min 13 sheets/min 8 sheets/min 8 sheets/min 18 sheets/min 13 sheets/min 10 sheets/min	22 sheets/min 13 sheets/min 10 sheets/min 11 sheets/min 22 sheets/min 13 sheets/min 10 sheets/min
	feed from Multi Purpose Tray	A4/Letter: A4-R/Letter-R: A3/Ledger: B4/Legal: B5: B5-R: A5-R: A6-R:	13 sheets/min 11 sheets/min 7 sheets/min 7 sheets/min 13 sheets/min 11 sheets/min 9 sheets/min 9 sheets/min	16 sheets/min 11 sheets/min 9 sheets/min 10 sheets/min 16 sheets/min 11 sheets/min 9 sheets/min 9 sheets/min
First Copy Time (A4, feed from Cassette)		5.7 seconds or less		
Zoom Level		Manual mode: 25 to 400%, 1% increments Auto mode: Preset Zoom		
Continuous Copying		1 to 999 sheets		
Resolution		600 × 600 dpi		
Supported Original Types		Sheet, Book, 3-dimensional objects (maximum original size: Ledger/A3)		
Original Feed System		Fixed		

Printer function

Item	Description	
	18 ppm	22 ppm
Printing Speed	Same as Copying Speed.	
First Copy Time (A4, feed from Cassette)	5.7 seconds or less	
Resolution	600 × 600 dpi, Fast 1200 dpi	
Operating System	Windows XP, Windows Server 2003, Windows Vista, Windows 7, Windows 8, Windows Server 2008, Windows Server 2012, Mac OS 10.x	
Interface	USB Interface Connector: 1 (USB Hi-Speed)	
Page Description Language	Hostbased (GDI)	
Emulation	-	

TONER
www.tonerplus.com.ua

Scanner function

Item	Description	
	18 ppm	**22 ppm**
Resolution	B/W: 600 dpi, 400 dpi, 300 dpi, 200 dpi Color: 300 dpi, 200 dpi	
File Format	TIFF (MMR/JPEG compression), PDF (MMR/JPEG compression/high compression), JPEG, BMP	
Scanning Speed	<600 dpi> 1-sided B/W 22 Images/min 2-sided B/W 8 Images/min <300dpi> 1-sided B/W 22 Images/min Grayscale 14 Images/min Color 14 Images/min 2-sided B/W 8 Images/min Grayscale 6 Images/min Color 6 Images/min (A4 landscape, Image quality: Text/Photo original)	
Interface	USB	

(2) Document processor (DP-480) (Option)

Item	Description
Original Feed Method	Automatic feed
Supported Original Types	Sheet originals
Paper Size	Maximum: Ledger/A3 Minimum: Statement-R/A5-R
Paper Weight	1-sided: 45 to 120 g/m2 2-sided: 50 to 120 g/m2
Loading Capacity	50 sheets (50 to 80 g/m2) maximum 30 sheets (50 to 80 g/m2) maximum: Mixed original sizes (auto selection)
Dimensions (W) × (D) × (H)	22 3/16 × 17 1/4 × 5" 563 × 439 × 128 mm
Weight	13.2 lbs. or less /6 kg or less

TONER
www.tonerplus.com.ua

(3) Paper Feeder (PF-480) (Option)

Item	Description
Paper Supply Method	Automatic Feeding (No. Sheets: 300, 80 g/m2)
Paper Size	A3, B4, A4, A4-R, B5, B5-R, A5-R, Ledger, Legal, Oficio II, Letter-R, Letter, Statement-R, Folio, 8K, 16K, 16K-R, 216 × 340 mm
Supported Paper	Paper weight: 64 to 105 g/m2 Media types: Plain, Rough, Vellum, Recycled, Preprinted, Bond, Color (Colour), Prepunched, Letterhead, Thick, High Quality, Custom 1 to 8
Dimensions (W) × (D) × (H)	22 1/4 × 20 1/2 × 5 5/8" 565 × 520 × 143.5 mm
Weight	13.2 lbs. or less /6 kg or less

(4) Duplex Unit (DU-480) (Option)

Item	Description
Paper Size	A3, B4, A4, A4-R, B5, B5-R, A5-R, Ledger, Legal, Oficio II, Letter-R, Letter, Statement-R, Executive, Folio, 216 × 340 mm
Supported Paper	Paper weight: 64 to 105 g/m2 Media types: Plain, Rough, Recycled, Preprinted, Bond, Color (Colour), Prepunched, Letterhead, Thick, High Quality, Custom 1 to 8
Dimensions (W) × (D) × (H)	14 3/4 × 2 3/8 × 8 5/8" 375 × 60 × 220 mm
Weight	Approx. 2.2 lbs. / Approx. 1 kg

NOTE: These specifications are subject to change without notice.

TONER
www.tonerplus.com.ua

1-1-2 Parts names

(1) Parts names

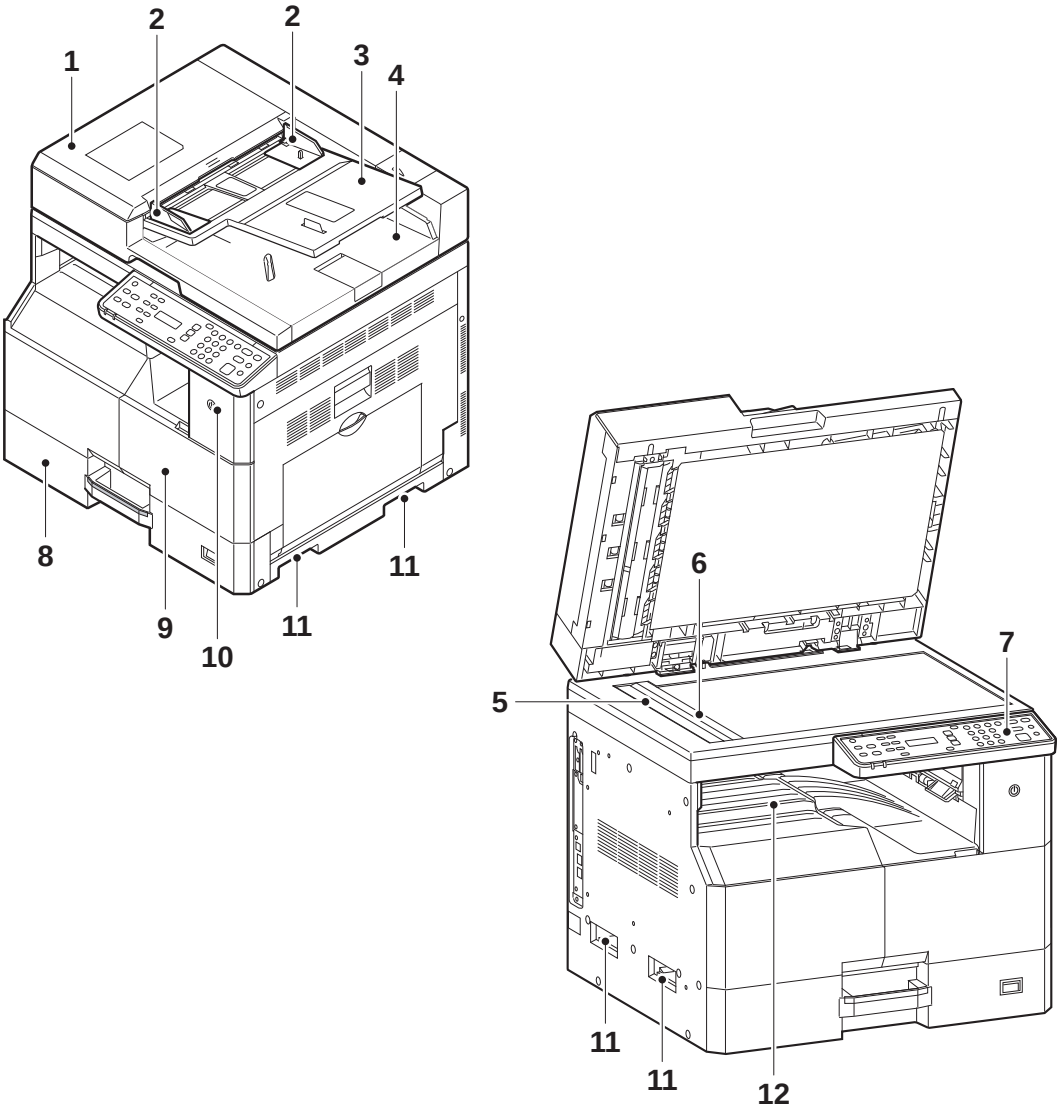

Figure 1-1-1

1. Document Processor (Reverse Automatic) (Option)
2. Original Width Guides
3. Original Table
4. Original Eject Table
5. Slit Glass
6. Original Size Indicator Plates
7. Operation Panel
8. Cassette1
9. Front Cover
10. Power Switch
11. Handles
12. Inner Tray

TONER
www.tonerplus.com.ua

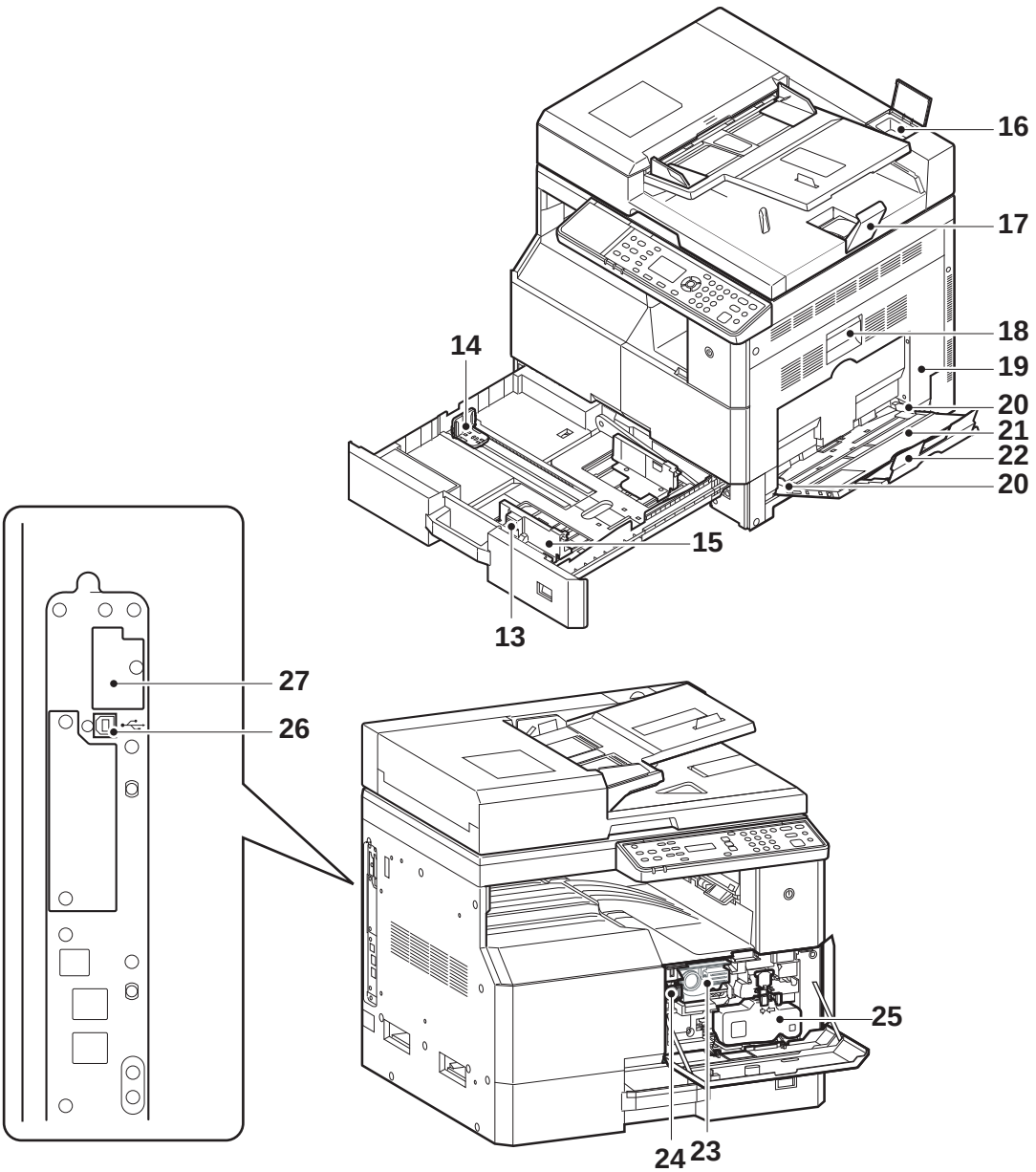

Figure 1-1-2

13. Paper Width Adjusting Tab
14. Paper Length Guide
15. Paper Width Guide
16. Cleaning Cloth
17. Original Stopper Compartment
18. Right Cover 1 Lever
19. Right Cover 1
20. Paper Width Guide
21. Multi Purpose Tray
22. Support Tray Section of the Multi Purpose Tray
23. Toner Container
24. Toner Container Lever
25. Waste Toner Box
26. USB Interface Connector
27. SD card slot

TONER
www.tonerplus.com.ua

(2) Option

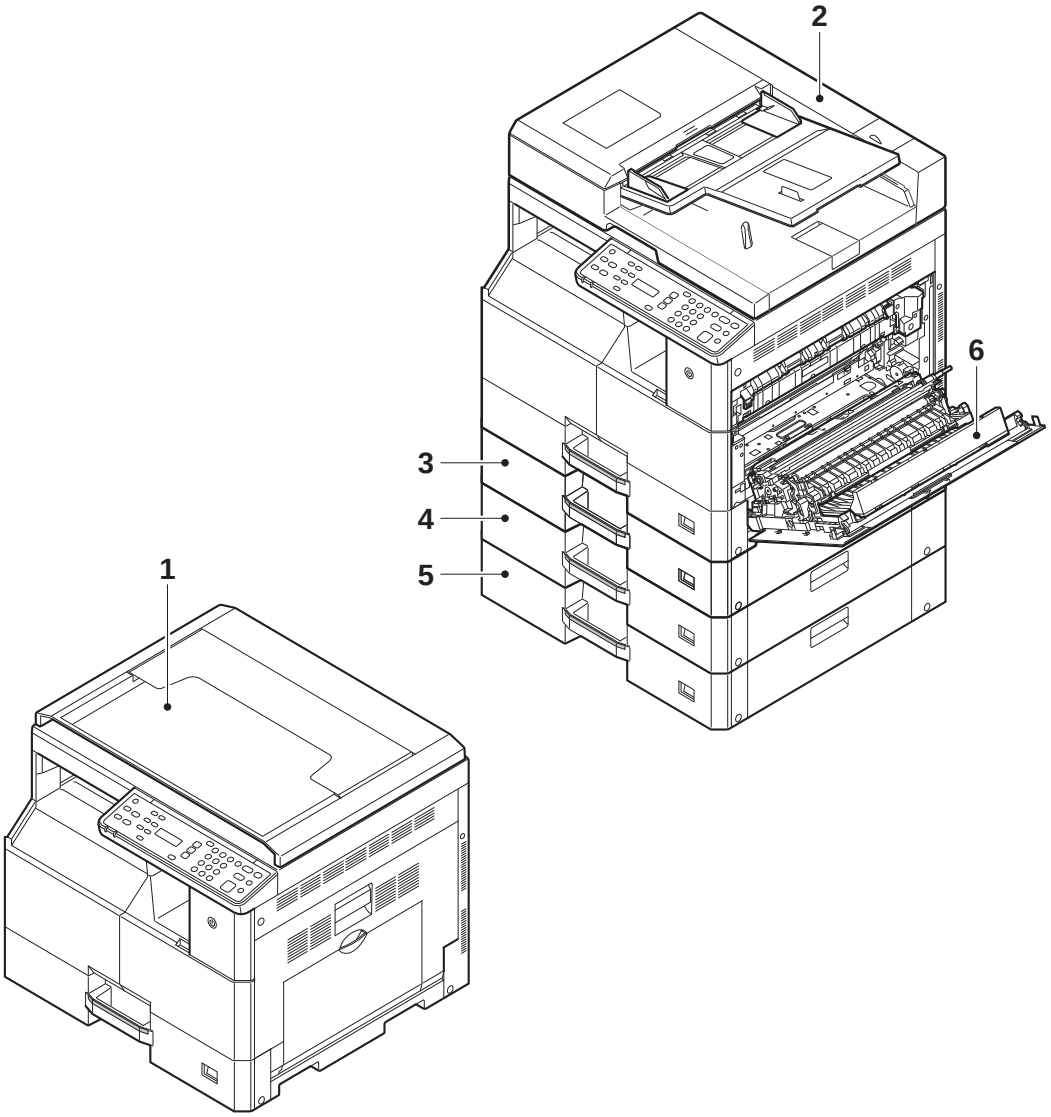

Figure 1-1-3

1. Original Cover
2. Document Processor (Reverse Automatic)
3. Cassette 2
4. Cassette 3
5. Cassette 4
6. Duplex Unit

TONER
www.tonerplus.com.ua

(3) Operation panel

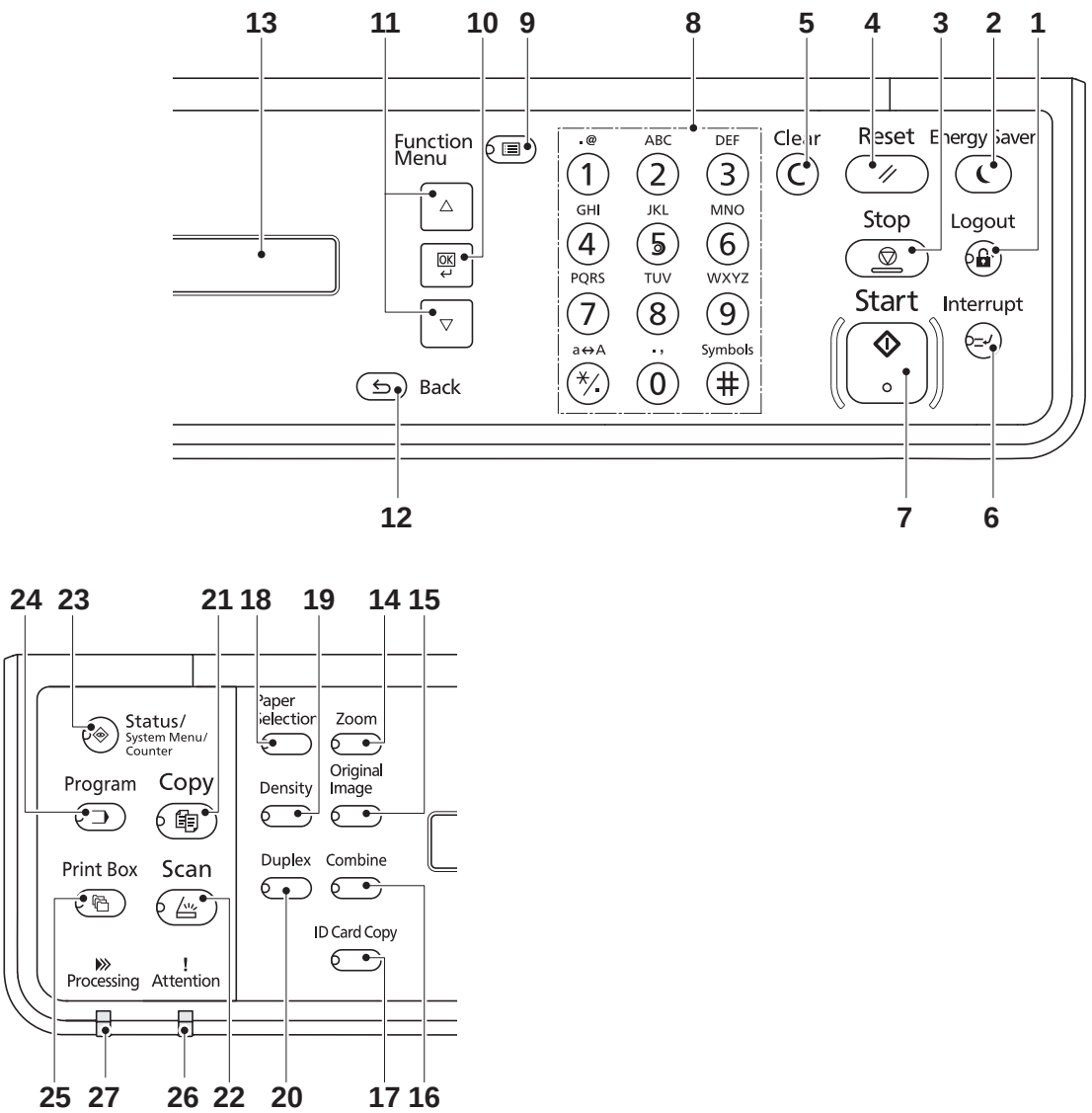

Figure 1-1-4

1. Logout key
2. Energy Saver key
3. Stop key
4. Reset key
5. Clear key
6. Interrupt key
7. Start key
8. Numeric keys
9. Function Menu key
10. OK key
11. Arrow key (up/down)
12. Back key
13. LCD
14. Zoom key
15. Original Image key
16. Combine key
17. ID Card Copy key
18. Paper selection key
19. Density key
20. Duplex key
21. Copy key
22. Scan key
23. Status/System Menu/Counter key
24. Program key
25. Print Box
26. Attention Indicator
27. Processing Indicator

TONER
www.tonerplus.com.ua

1-1-3 Machine cross section

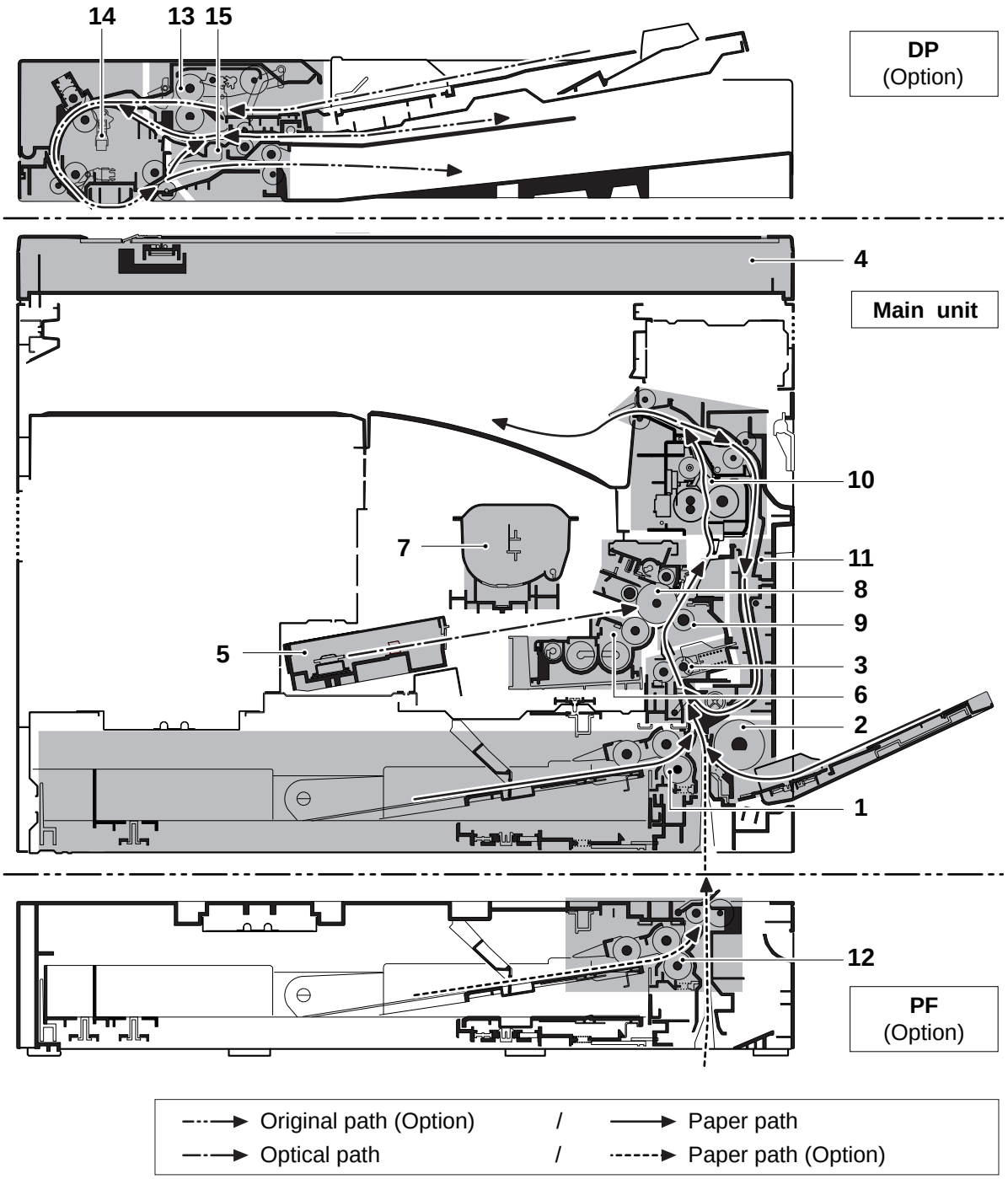

Figure 1-1-5

1. Cassette paper feed section
2. MP tray paper feed section
3. Paper conveying section
4. Optical section
5. Laser scanner unit (LSU)
6. Developer unit
7. Toner container section
8. Drum unit
9. Transfer/Separation sections
10. Fuser/Eject/Feed shift section
11. Duplex section (option)
12. PF paper feed section (option)
13. DP paper feed section (option)
14. DP paper conveying section (option)
15. DP feed shift section (option)

TONER
www.tonerplus.com.ua

1-1-4 Option composition

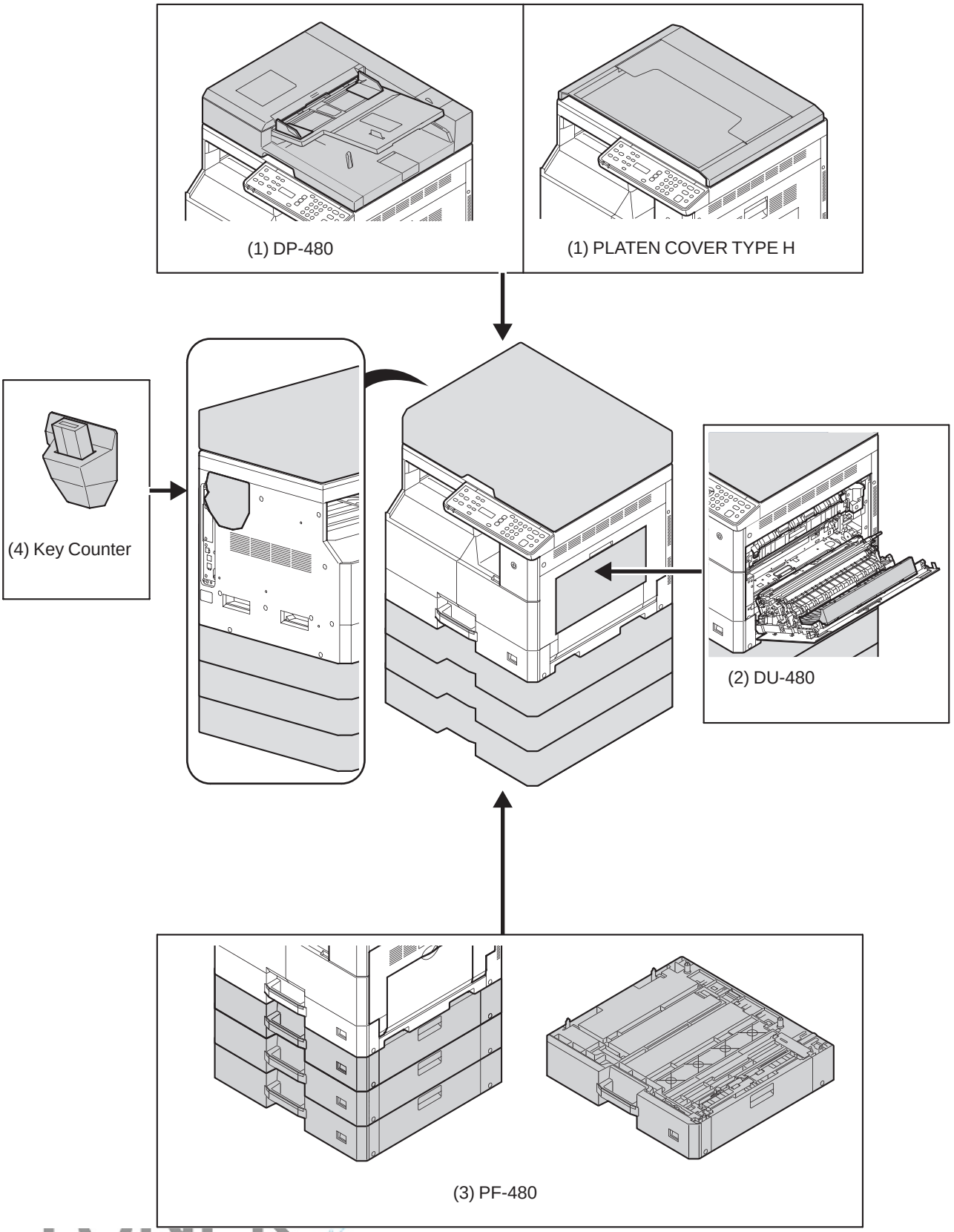

www.tonerplus.com.ua

This page is intentionally left blank.

TONER
www.tonerplus.com.ua

1-2-1 Installation environment

1. Temperature: 10 to 32.5°C/50 to 90.5°F
2. Humidity: 15 to 80% RH
3. Power supply: 120 V AC, 12.0 A
   220 - 240 V AC, 6.5 A
4. Power supply frequency: 50 Hz ±2%/60 Hz ±2%
5. Installation location
   Avoid direct sunlight or bright lighting. Ensure that the photoconductor will not be exposed to direct sunlight or other strong light when removing paper jams.
   Avoid locations subject to high temperature and high humidity or low temperature and low humidity; an abrupt change in the environmental temperature; and cool or hot, direct air.
   Avoid places subject to dust and vibrations.
   Choose a surface capable of supporting the weight of the machine.
   Place the machine on a level surface (maximum allowance inclination: 1°).
   Avoid air-borne substances that may adversely affect the machine or degrade the photoconductor, such as mercury, acidic of alkaline vapors, inorganic gasses, NOx, SOx gases and chlorine-based organic solvents.
   Select a well-ventilated location.
6. Allow sufficient access for proper operation and maintenance of the machine.

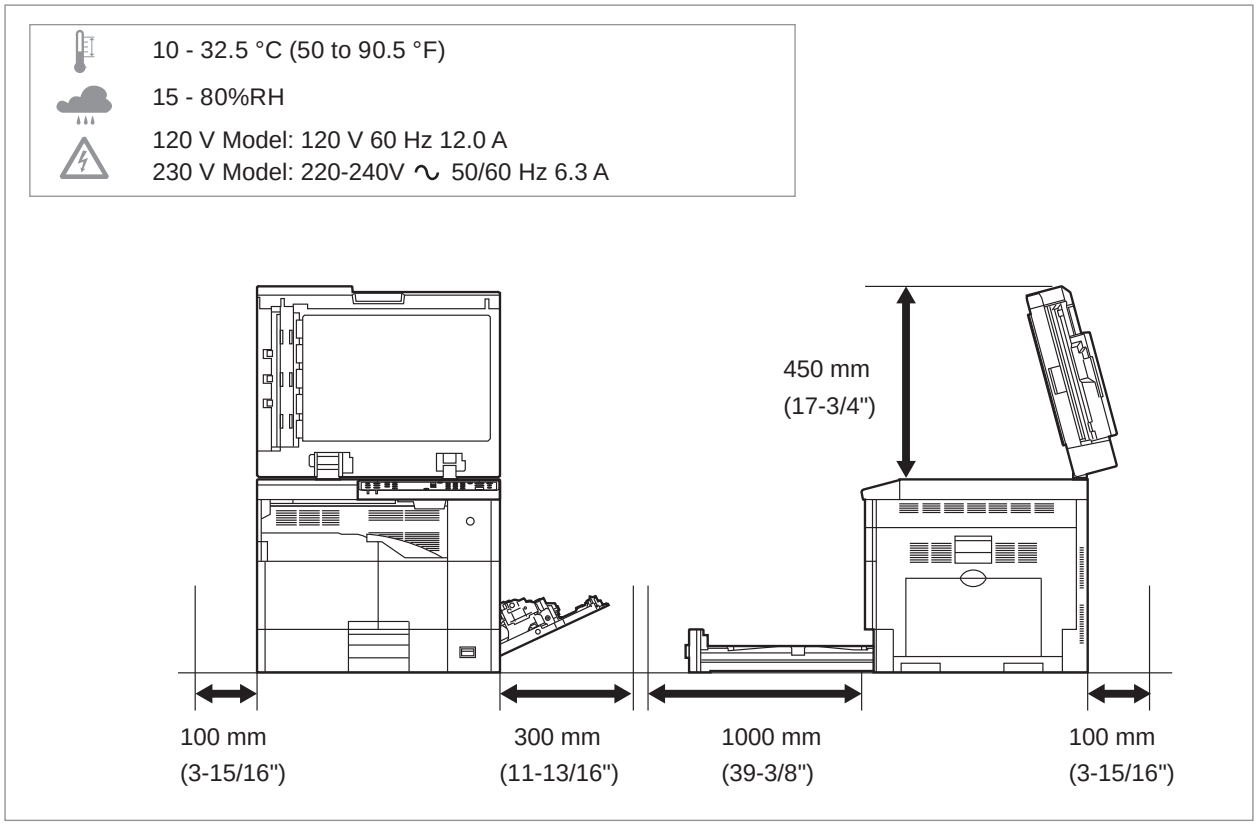

Figure 1-2-1

TONER
www.tonerplus.com.ua

1-2-2 Unpacking and installation

(1) Installation procedure

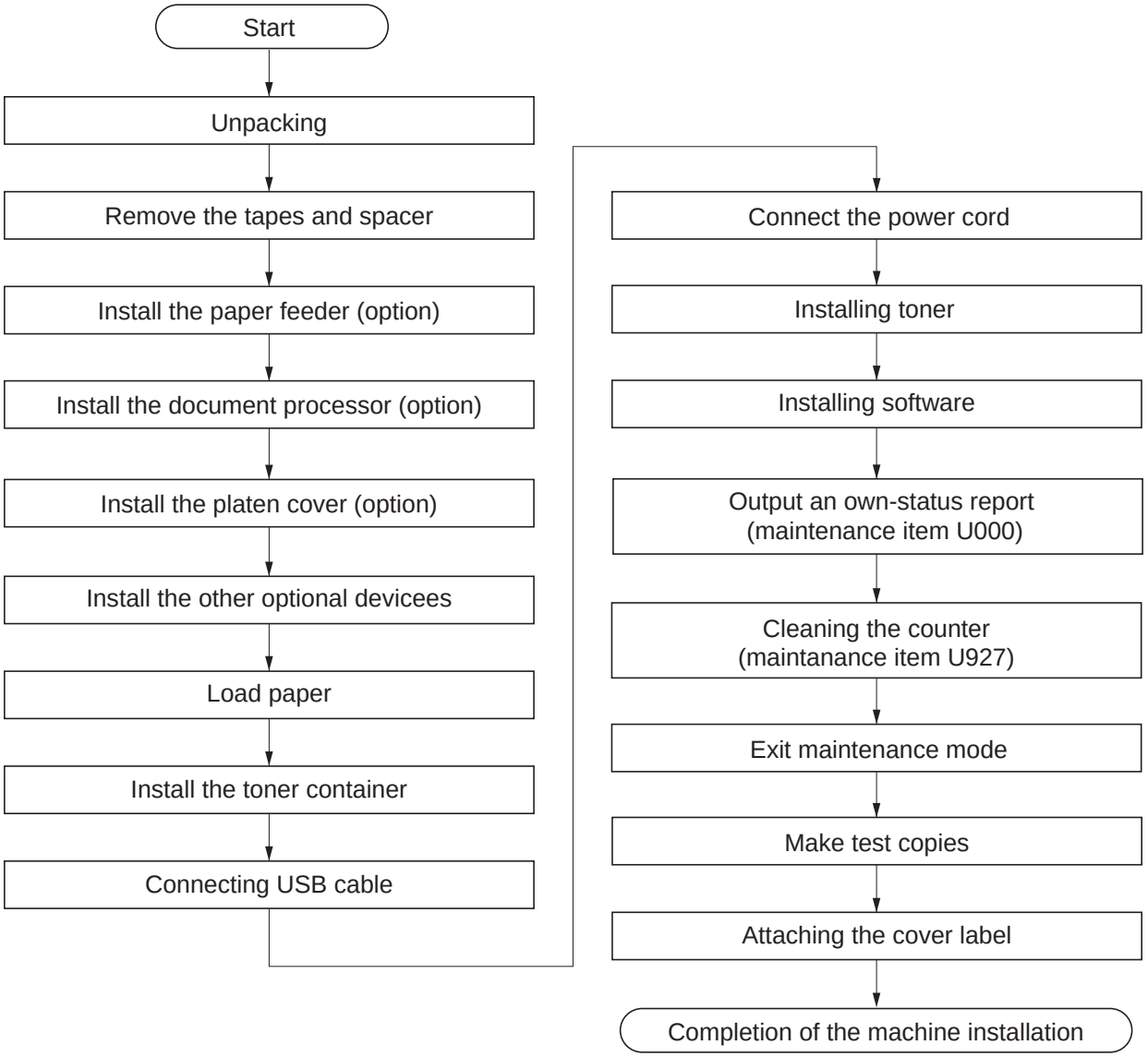

TONER
www.tonerplus.com.ua

Unpacking

[Main unit]

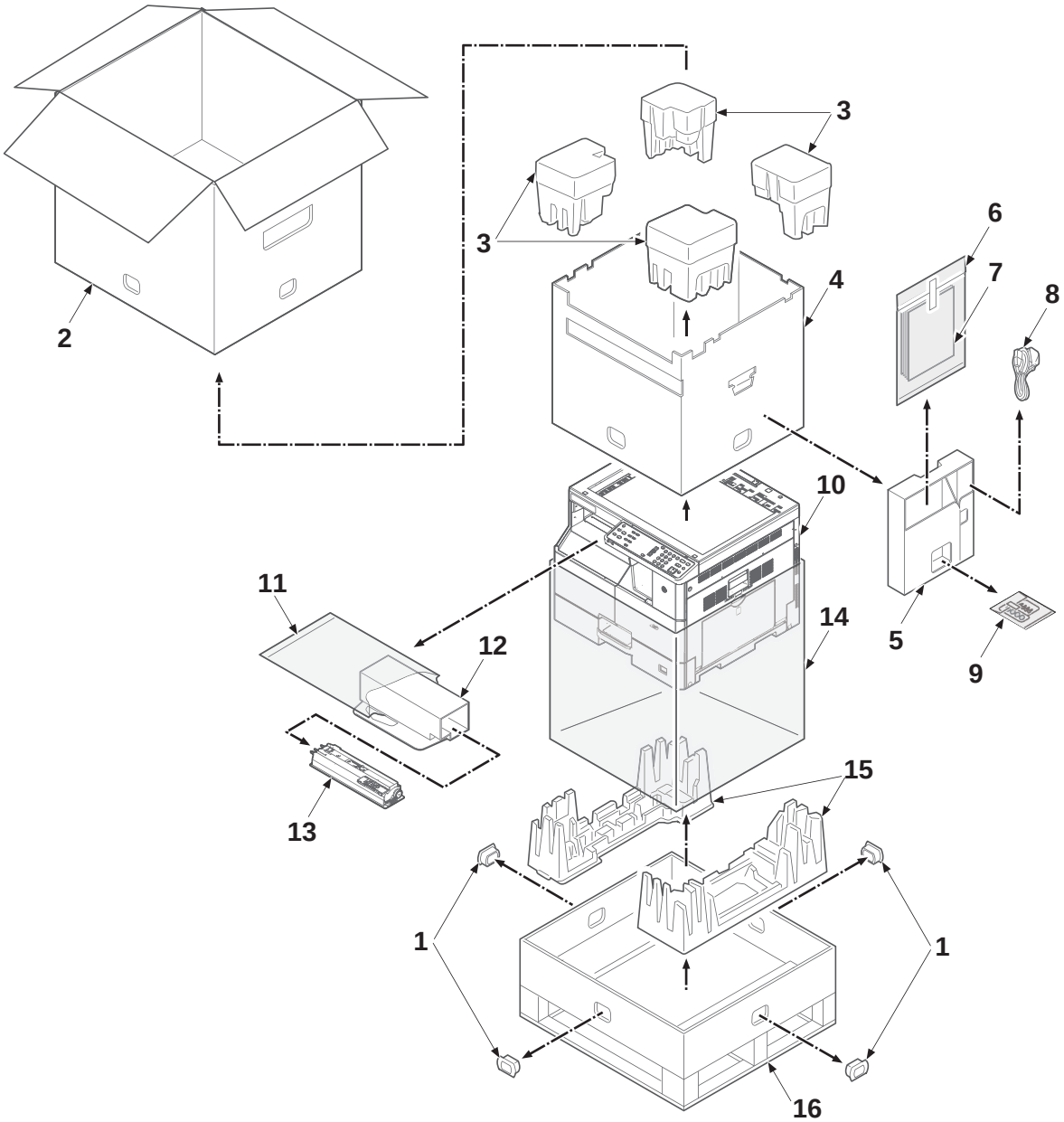

Figure 1-2-2

1. Hinge joints
2. Outer case
3. Top pads
4. Inner case
5. Document tray
6. Plastic bag
7. Operation guide etc.
8. Power code
9. Acsessories
10. Main unit
11. Plastic bag
12. Toner container case
13. Toner container
14. Plastic bag
15. Bottom pads
16. Skid

*: Place the machine on a level surface.

TONER
www.tonerplus.com.ua

[Document Processor (Option)]

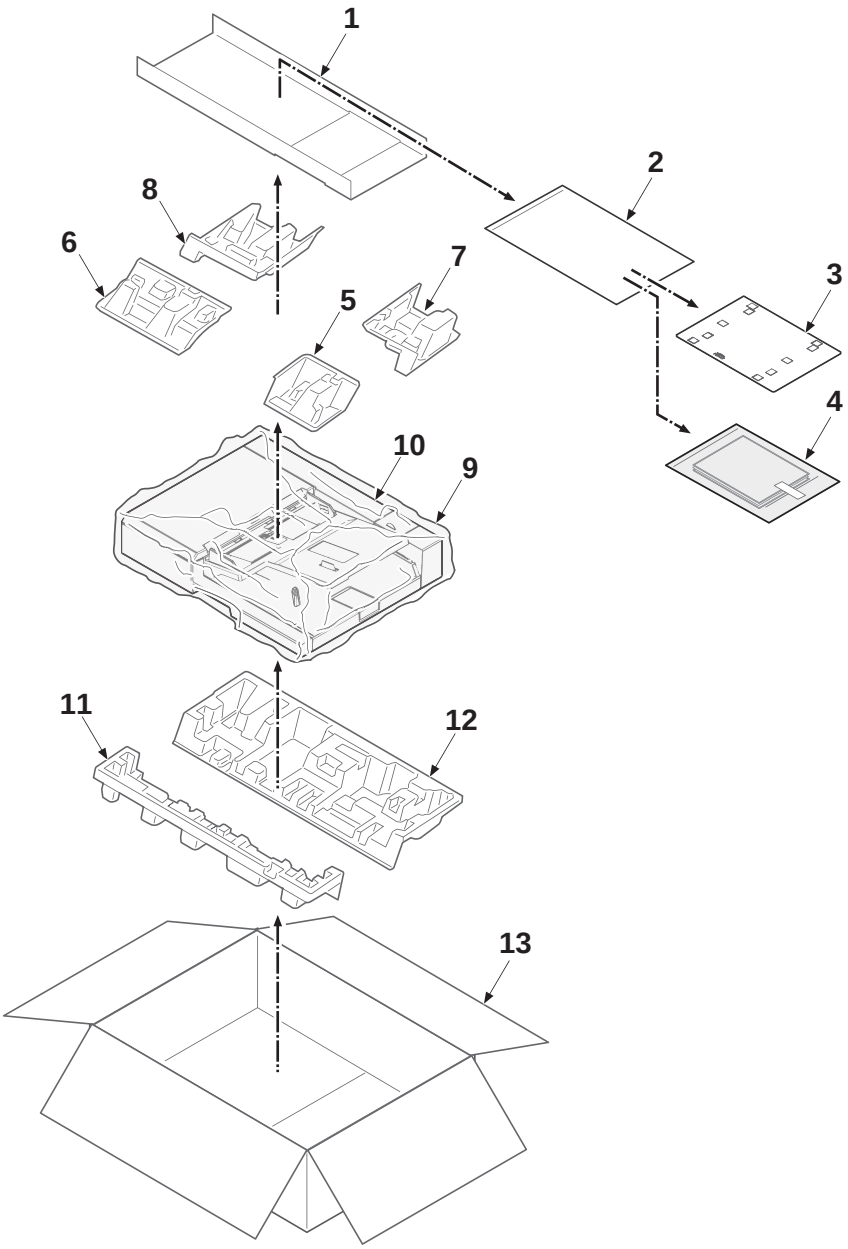

Figure 1-2-3

1. Acsessory tray
2. Plastic bag
3. Platen
4. Installation guide etc.
5. Right front upper pad
6. Left front upper pad
7. Right rear upper pad
8. Left rear upper pad
9. Plastic sheet
10. Document processor
11. Front bottom pad
12. Rear bottom pad
13. Outer case

TONER
www.tonerplus.com.ua

[Paper feeder (Option)]

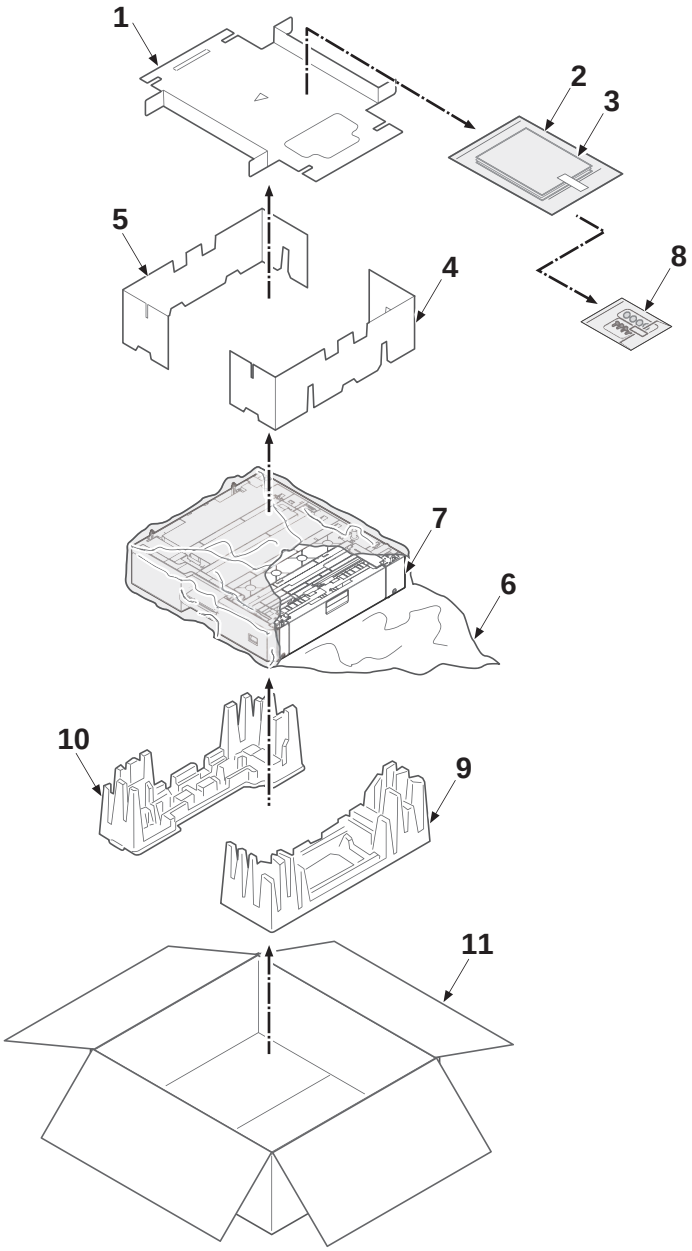

Figure 1-2-4

1. Acsessory tray
2. Plastic bag
3. Installation guide etc.
4. Right middle inner case
5. Left middle inner case
6. Plastic sheet
7. Paper Feeder
8. Acsessories
9. Right bottom pads
10. Left bottom pads
11. Outer case

TONER
www.tonerplus.com.ua

[Duplex unit (Option)]

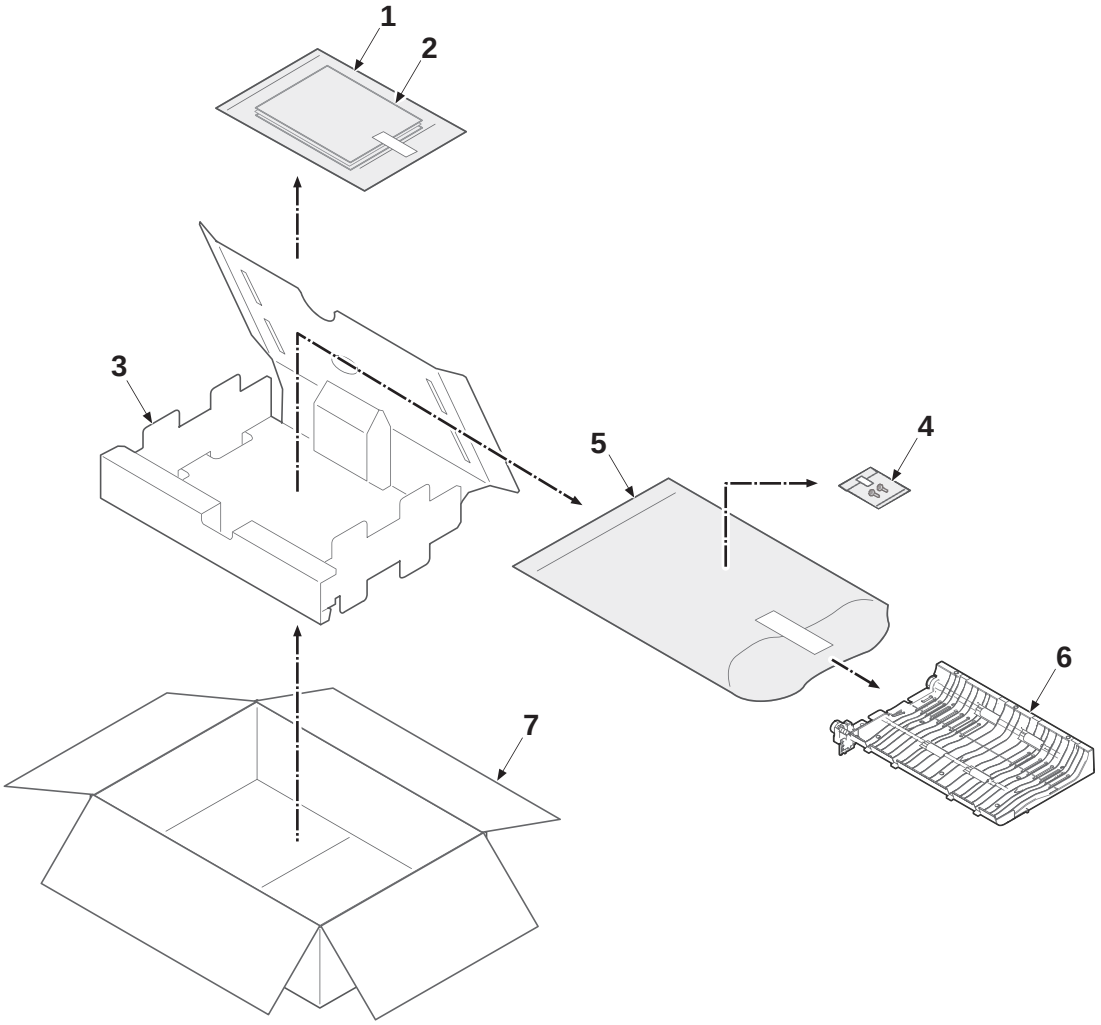

Figure 1-2-5

1. Plastic bag
2. Installation guide etc.
3. Inner case
4. acsessories
5. Plastic bag
6. Duplex unit
7. Outer case

TONER
www.tonerplus.com.ua

Remove the tapes and spacer

*: Removed the packing components that a fixed tape and shock absorbing material etc. are.

Install the paper feeder (option)

1. A main unit is carried on a paper feeder.
2. Fix the fixing plate of PF to main unit by four screws.

*: Refer to the installation guide for the details of attachment.

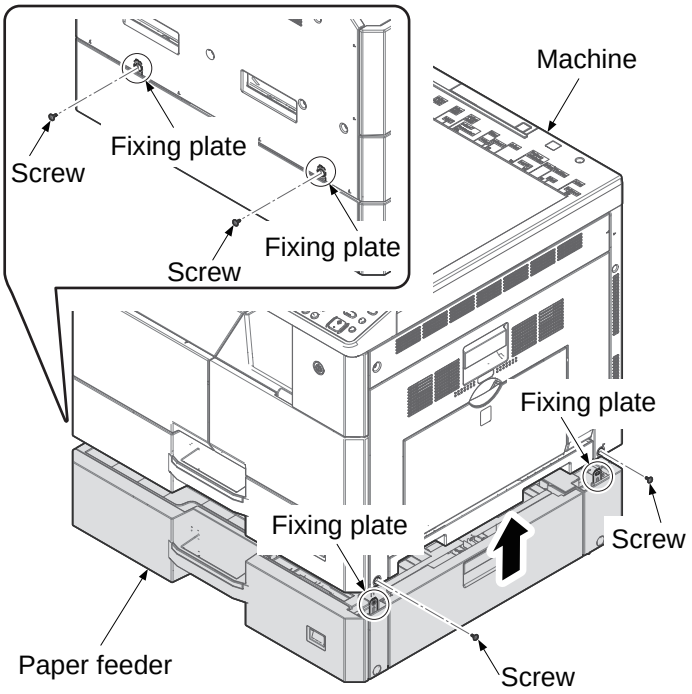

Figure 1-2-6

TONER
www.tonerplus.com.ua

Install the dcument processor (option)

1. A document processor is attached to a main unit.

*: Refer to the installation guide for the details of attachment.

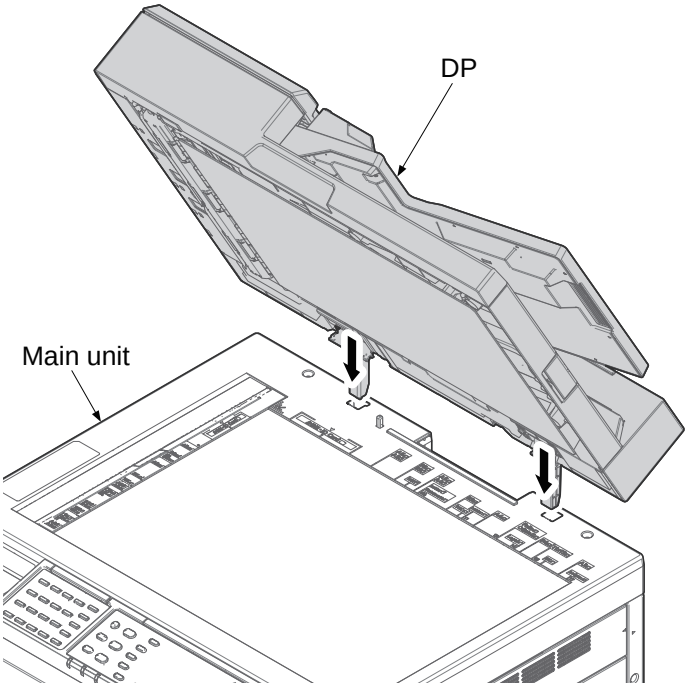

Figure 1-2-7

Install the platen cover (option)

1. The hinges of a platen cover are inserted in the attachment hole of a main unit.
2. Close the platen cover.

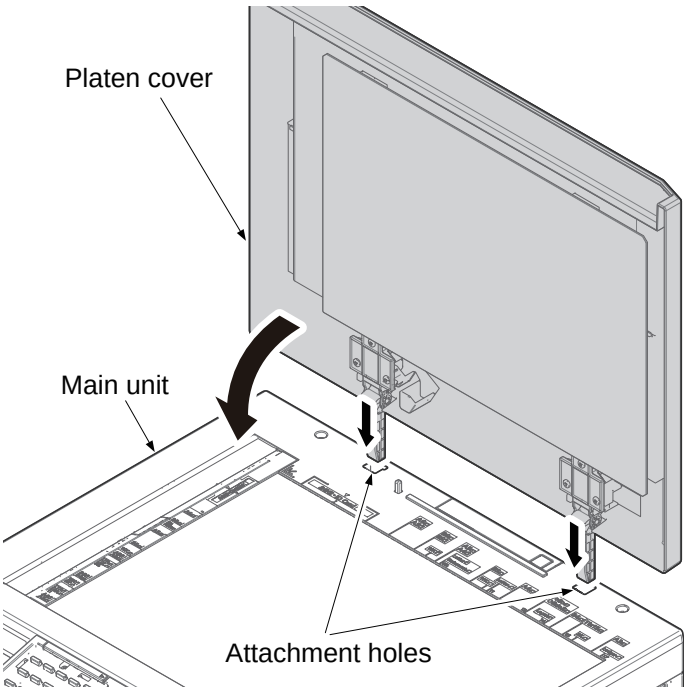

Figure 1-2-8

TONER
www.tonerplus.com.ua

Install the other optional devices

Install the optional devices (Cassette heater, Key counter, Fax system, Network interface etc.) as required.

Load paper

1. Pull the cassette out toward you until it stops.
2. Remove the protection paper.

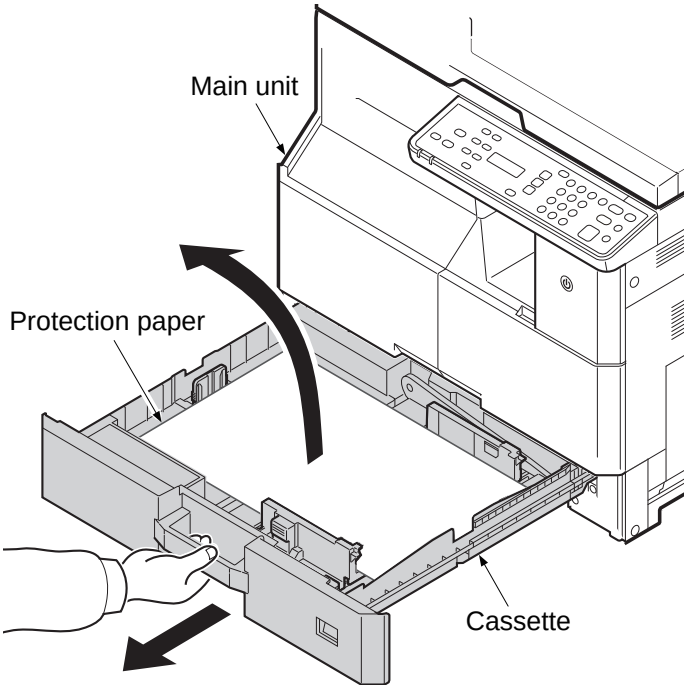

Figure 1-2-9

3. Push down on the cassette base plate and secure it.

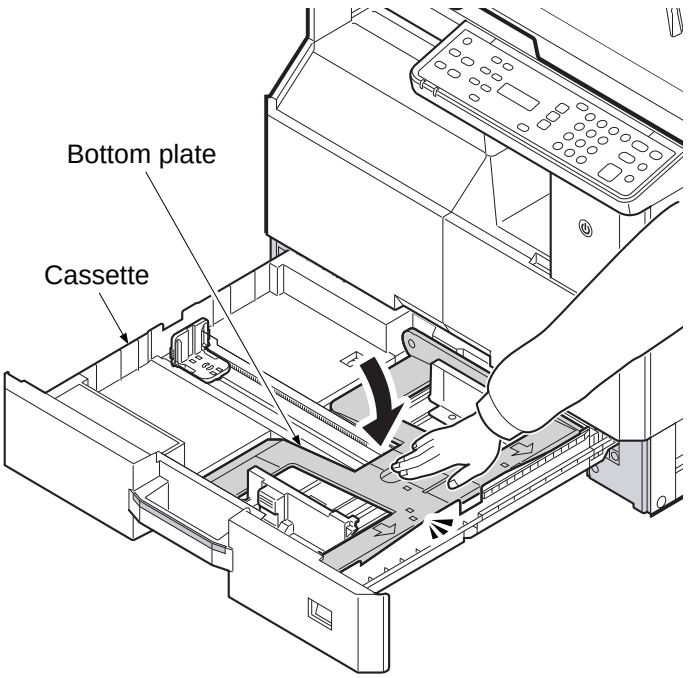

Figure 1-2-10

TONER
www.tonerplus.com.ua

4. Holding the paper width adjusting tab, move the paper width guides to fit the paper. Paper sizes are marked on the cassette.

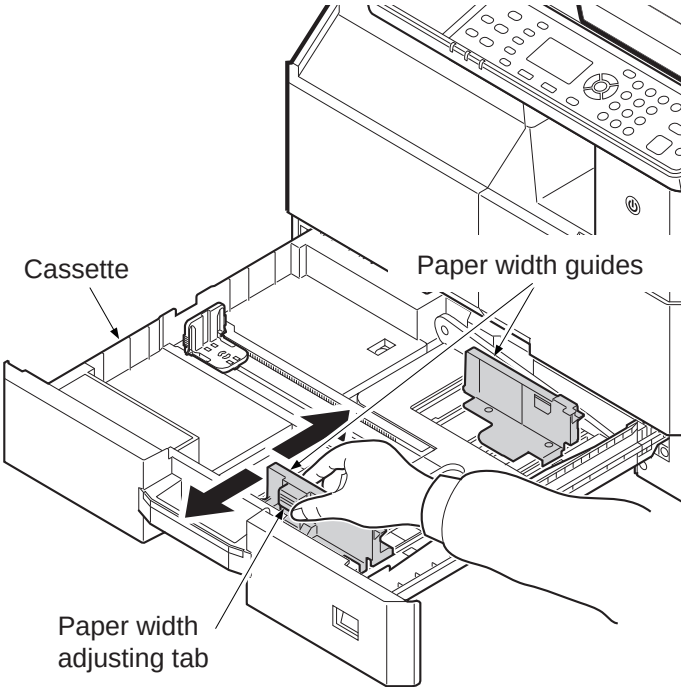

Figure 1-2-11

5. Squeeze the ends of the bottom of the paper length guide and move the guide to fit the length of the paper. Paper sizes are marked on the cassette.

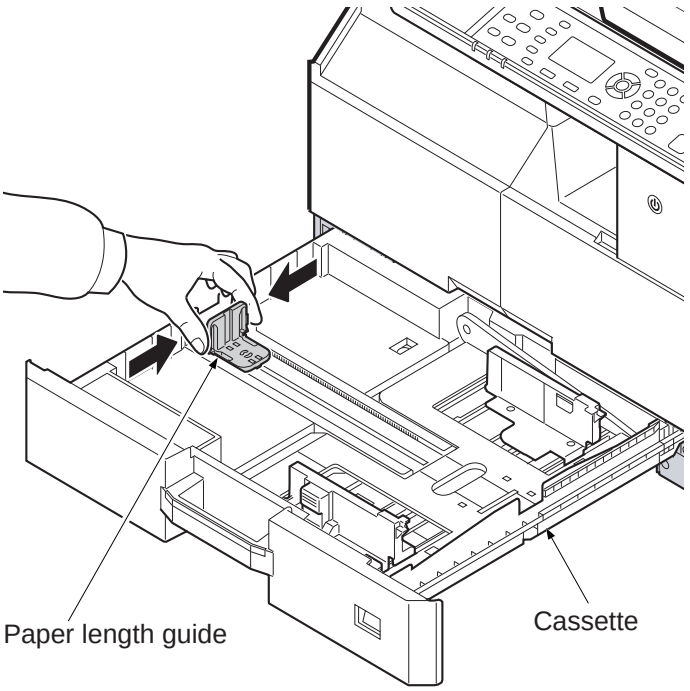

Figure 1-2-12

TONER
www.tonerplus.com.ua

6. Align the paper flush against the right side of the cassette.

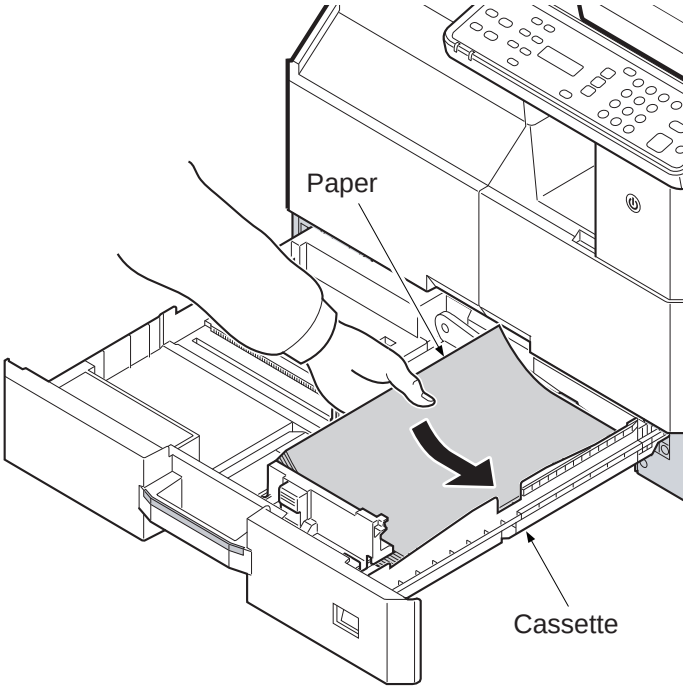

Figure 1-2-13

7. Insert the appropriate paper size card in the slot to indicate the size of the paper inside.

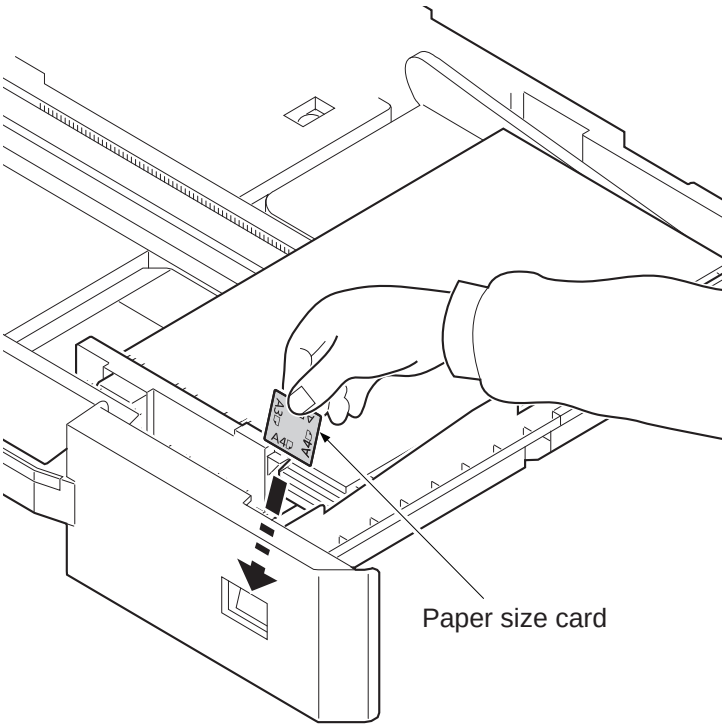

Figure 1-2-14

TONER
www.tonerplus.com.ua

Before loading paper

When you open a new package of paper, fan the sheets to separate them slightly prior to loading in the following steps.

1. Bend the whole set of sheets to swell them in the middle.
2. Hold the stack at both ends and stretch it while keeping the entire stack swelled.
3. Raise the right and left hands alternately to create a gap and feed air between the papers.
4. Finally, align the papers on a level, flat table.

*: If the paper is curled or folded, straighten it before loading. Paper that is curled or folded may cause a jam.

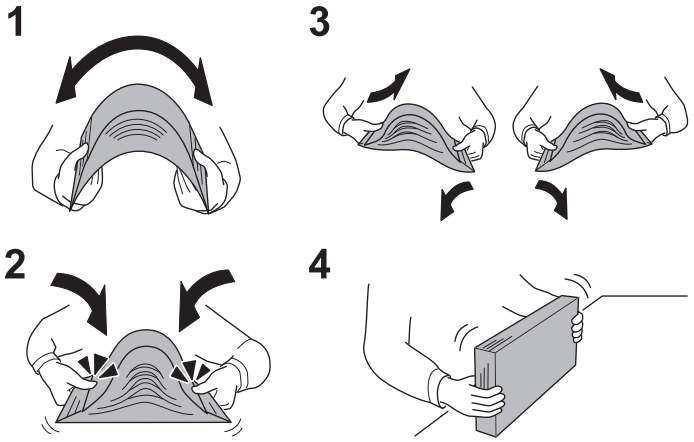

Figure 1-2-15

*: Load the paper with the print side facing up.

*: After removing new paper from its packaging, fan the paper before loading it in the cassette.

*: Before loading the paper, be sure that it is not curled or folded. Paper that is curled or folded may cause paper jams.

*: Ensure that the loaded paper does not exceed the level indicator (see illustration below).

*: The paper length and width guides must be adjusted to the paper size before loading the paper. Loading the paper without adjusting these guides may cause skewed feeding and paper jams.

*: Be sure that the paper length and width guides rest securely against the paper. If there is a gap, readjust the guides to fit the paper.

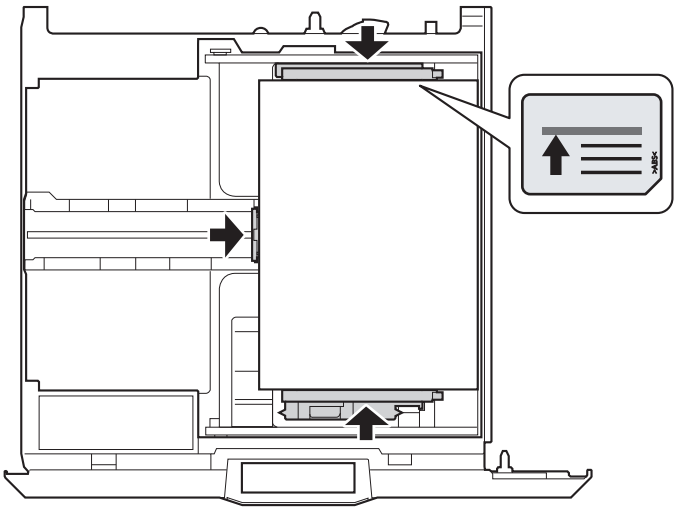

Figure 1-2-16

TONER
www.tonerplus.com.ua

Install the toner container

1. Strike the toner container approximately five or more times in the vertical direction to stir toner.

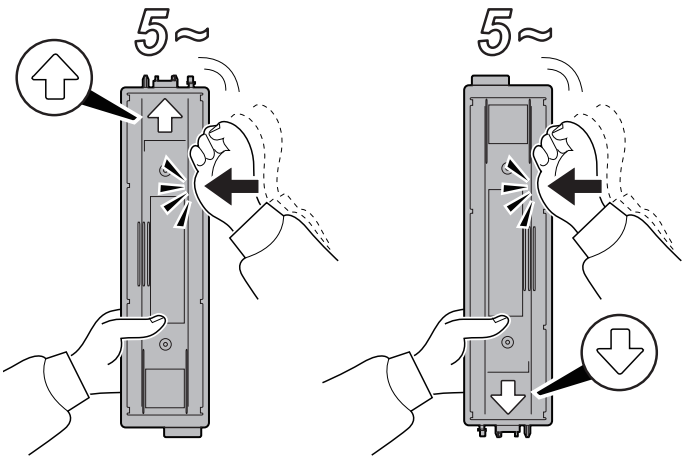

Figure 1-2-17

2. Shake the toner container approximately five or more times in the vertical direction to stir toner.

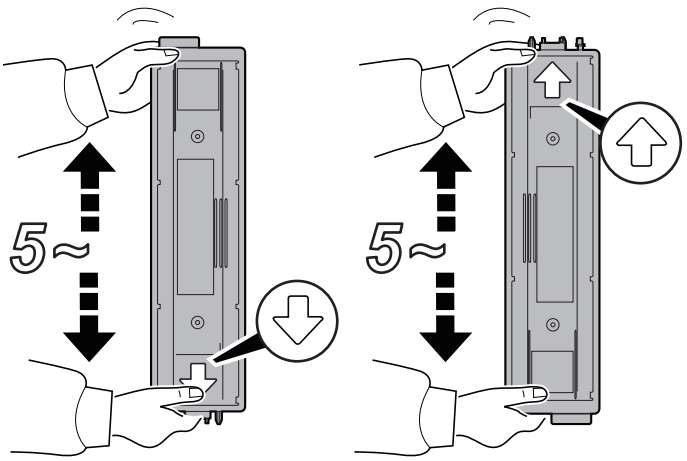

Figure 1-2-18

3. Shake the toner container approximately five or more times in the horizontal direction to stir toner.

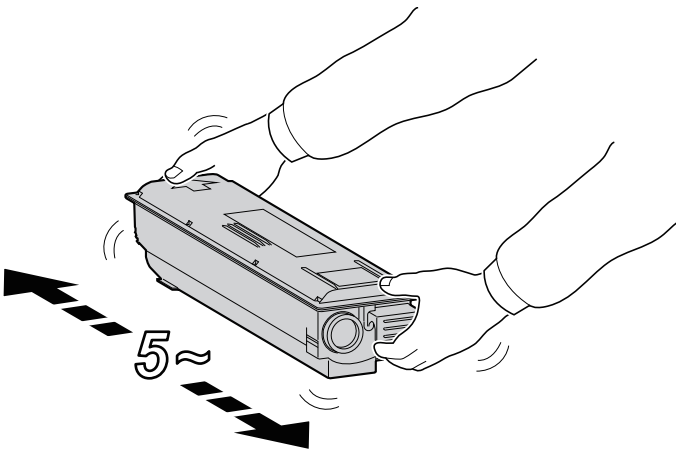

Figure 1-2-19

TONER
www.tonerplus.com.ua

4. Open the front cover.
5. Gently push the toner container into the machine.
   Note: Push the container all the way into the machine until it locks in place.
6. Close the front cover.

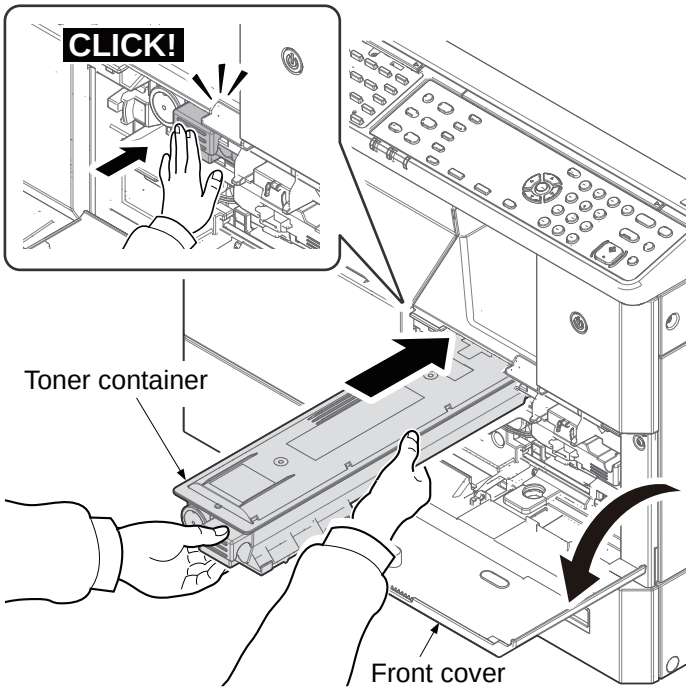

Figure 1-2-20

TONER
www.tonerplus.com.ua

Connecting USB cable

1. Connect the USB cable to the USB interface connector located on the left side of the body.
2. Connect the other end of the cable to the PC.

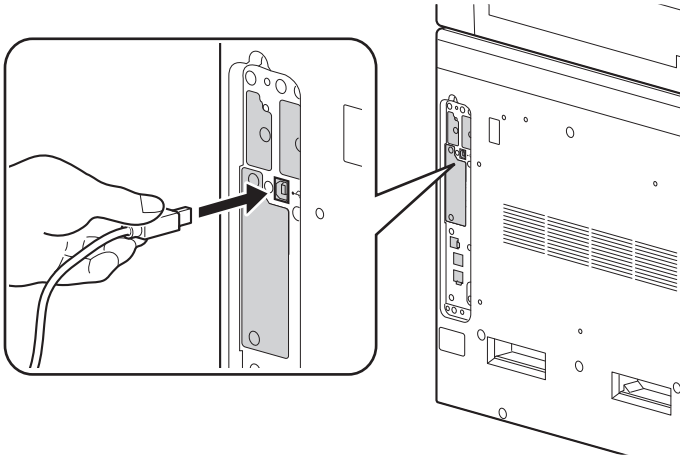

Figure 1-2-21

Connect the power cord

1. Connect one end of the supplied power cord to the machine and the other end to a power outlet.

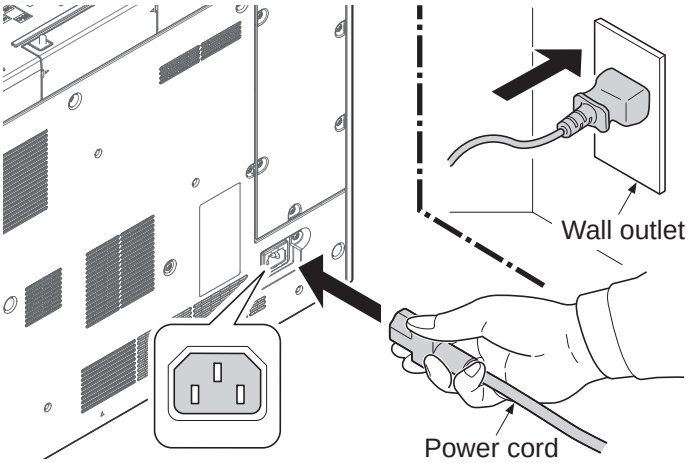

Figure 1-2-22

TONER
www.tonerplus.com.ua

Installing toner

1. Turn the main power switch on. Toner installation is started.
2. The drive chain is disengaged when toner installation is completed.
   Run maintenance mode U130 if [Add Toner] remains displayed even after the drive chain is disengaged.

*: A high pitch continuous sound may be heard for about 10 seconds during the toner installation. However, this is not abnormal, so please continue the installation.

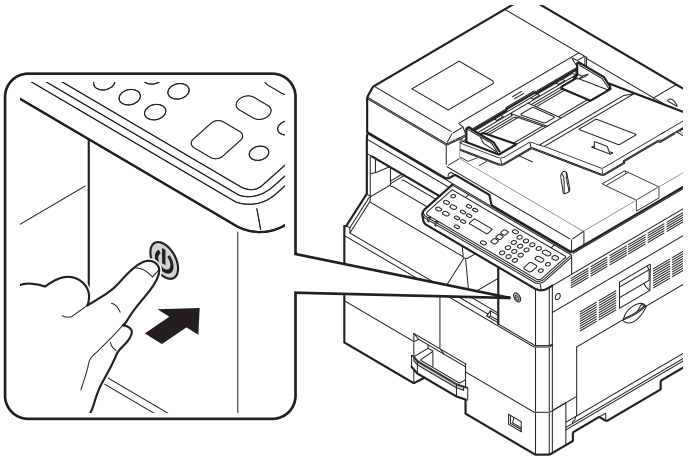

Figure 1-2-23

Installing software

1. Install appropriate software on your PC from the included Product Library disc if you want to use the printer function of this machine or perform TWAIN / WIA transmission from your PC.
   (Reference of an operation guide)

Output an own-status report (maintenance item U000)

1. Enter the maintenance mode by entering 10871087 using the numeric keys.
2. Enter 000 using the numeric keys and press the start key.
3. Select Maintenance and press the start key to output a list of the current settings of the maintenance items.
4. Press the stop key to exit.

Clearing the counter (maintenance item U927)

1. Enter 927 using the numeric keys and press the start key.
2. Select [Excute].
3. Press the start key. The counter is cleared.
4. Press the stop key to exit.

Exit maintenance mode

1. Enter 001 using the numeric keys and press the start key. The machine exits the maintenance mode.

TONER
www.tonerplus.com.ua

Make test copies

1. Place an original and make test copies.

Attaching the cover label

1. Attach the cover labels to three screw holes in the machine.

Completion of machine installation

TONER
www.tonerplus.com.ua

1-2-3 Installing an accessories option

(1) Installing the SD card.

Procedure

1. Remove the screw and remove the SDcard cover.
2. Insert the SD card in the SD card slot.
3. Refit the removed SD card cover.

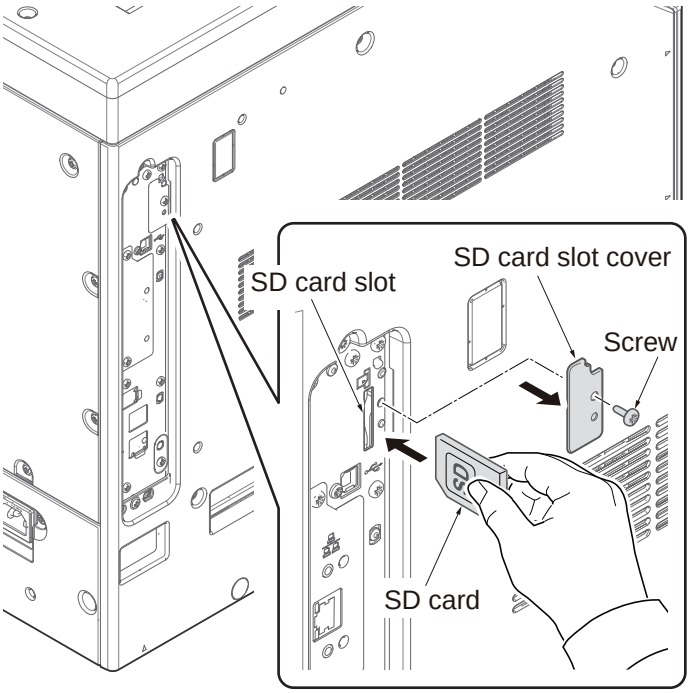

Figure 1-2-24

TONER
www.tonerplus.com.ua

(2) Installing the key counter (option)

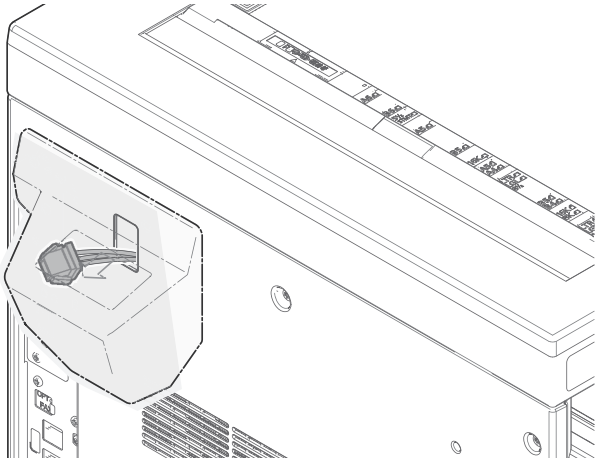

Key counter installation requires the following parts:

Parts	Quantity	Part.No.
WIRE KEY COUNTER	1	302NG46340

Procedure

1. Remove seven screws.
2. Remove the rear cover by pulling upward and releaseing three hooks.

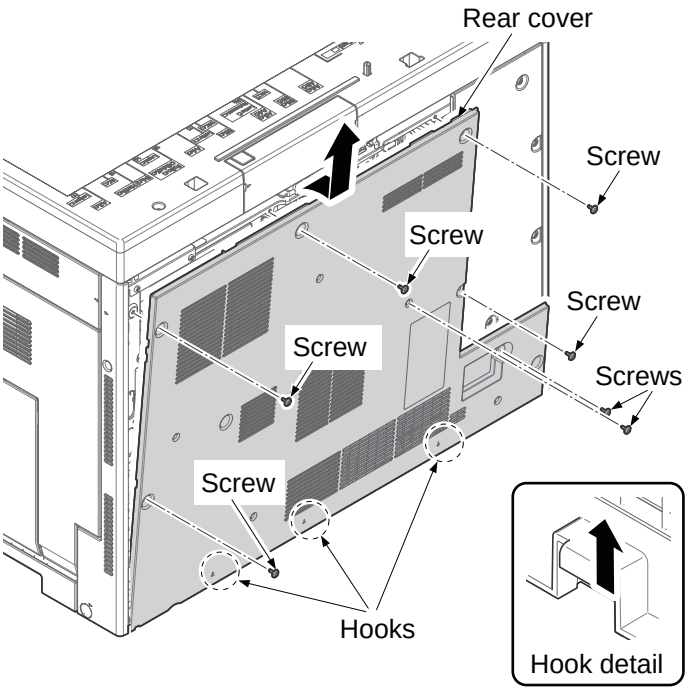

Figure 1-2-25

TONER
www.tonerplus.com.ua

3. Remove eight screws.
4. Pull the left cover upwards and then release four hooks.
5. Remove the left cover.

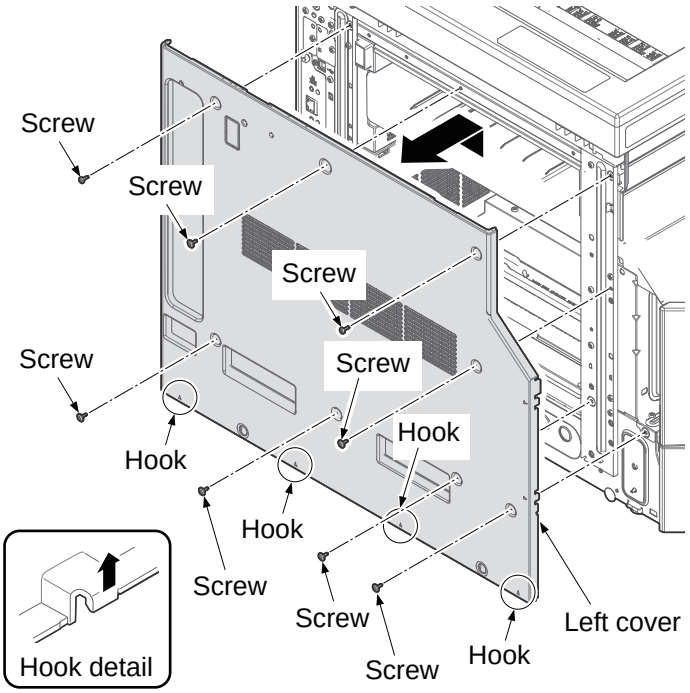

Figure 1-2-26

6. Cut out the aperture plate on the left cover using nippers.

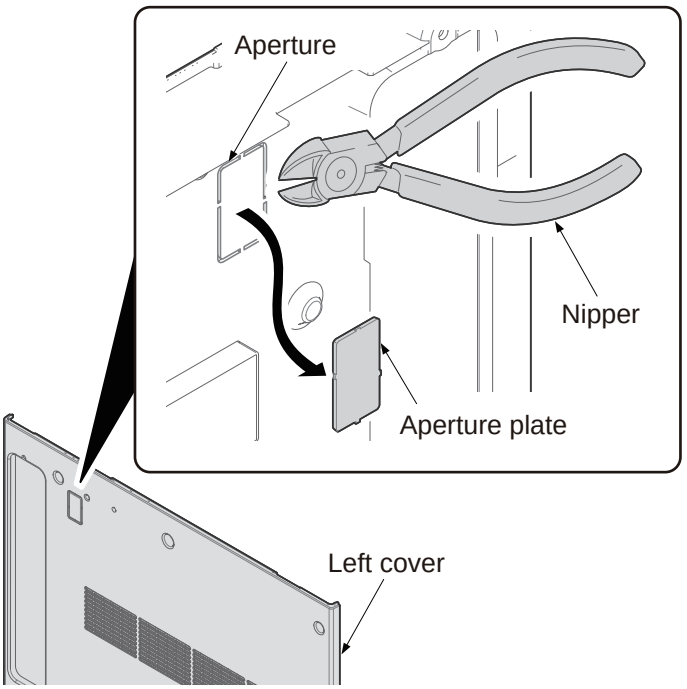

Figure 1-2-27

TONER
www.tonerplus.com.ua

7. Open the front cover.
8. Unhook two hooks using flat screw driver and then remove the front left cover by pulling it upward.

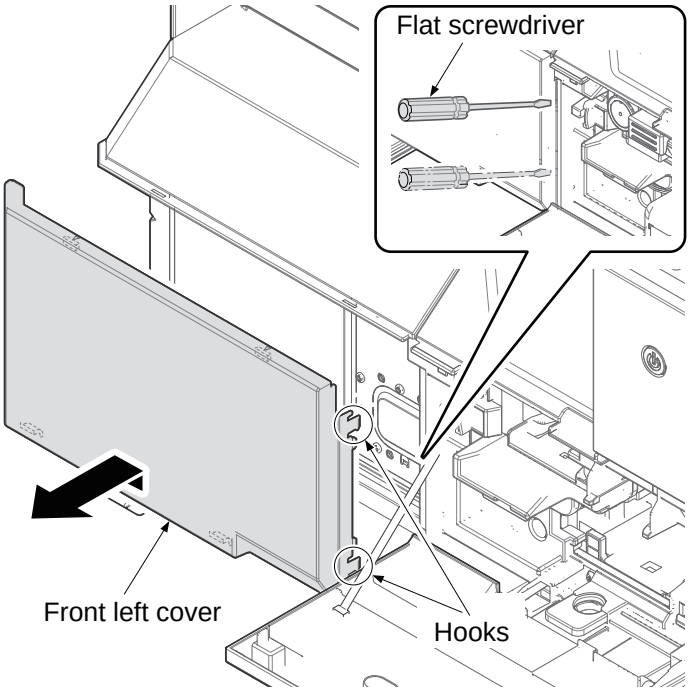

Figure 1-2-28

9. Remove the left tray.

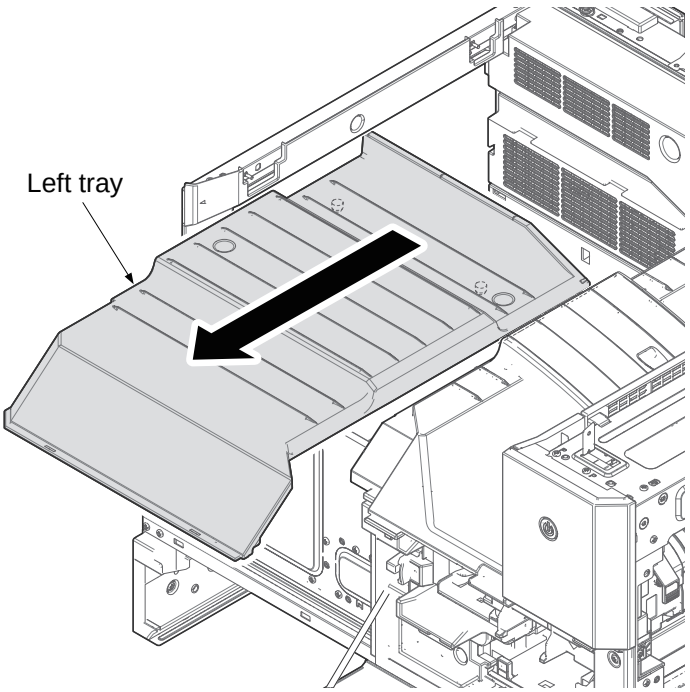

Figure 1-2-29

TONER
www.tonerplus.com.ua

10. Remove the screw.
11. Remove the right tray.

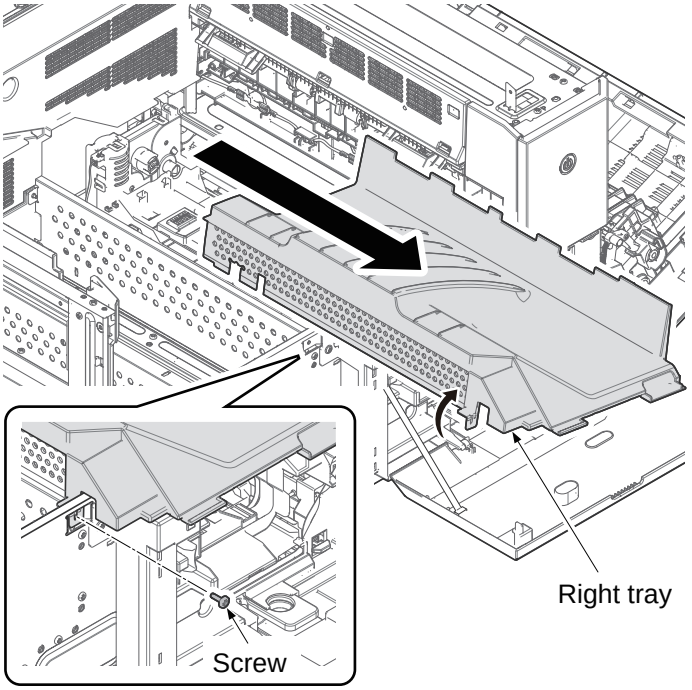

Figure 1-2-30

12. Remove the screw.
13. Remove the exit rear cover.
14. Cut out the aperture plate on the lexit rear cover using nippers.

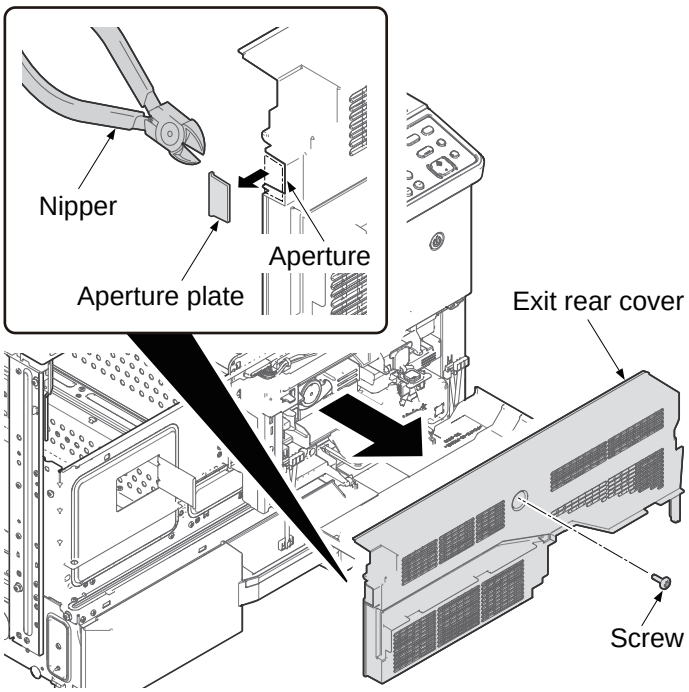

Figure 1-2-31

TONER
www.tonerplus.com.ua

15. Insert the cable tie each to the circular hole of two position.

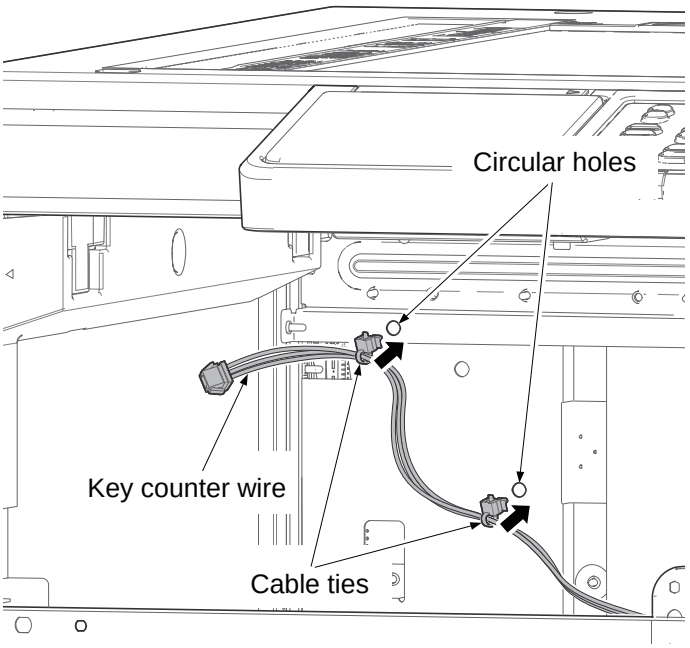

Figure 1-2-32

16. Pass the connector of the key counter wire through the aperture part of the machine frame and pull it out.
17. Connect the connector of the key counter wire to the main/engine PWB.

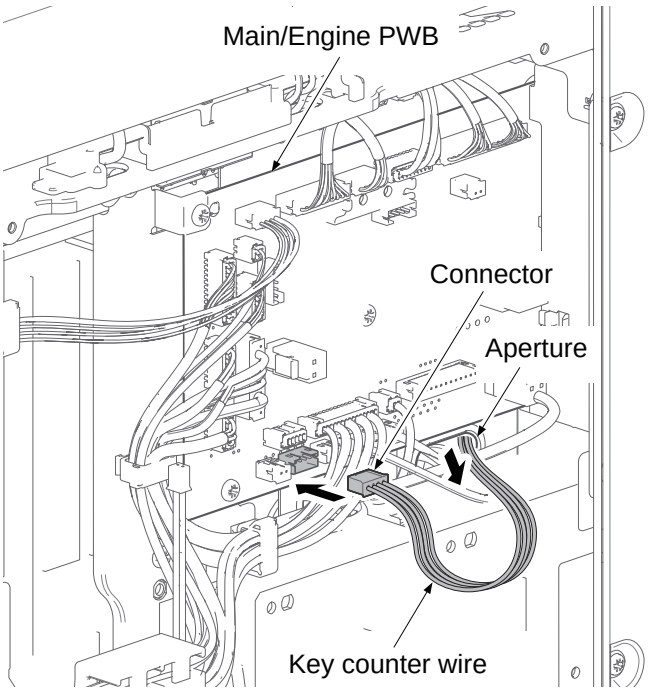

Figure 1-2-33

TONER
www.tonerplus.com.ua

18. Refit the left cover and pull out the conector of the key counter wire from the aperture part of the left cover.
19. Refit all the removed parts.

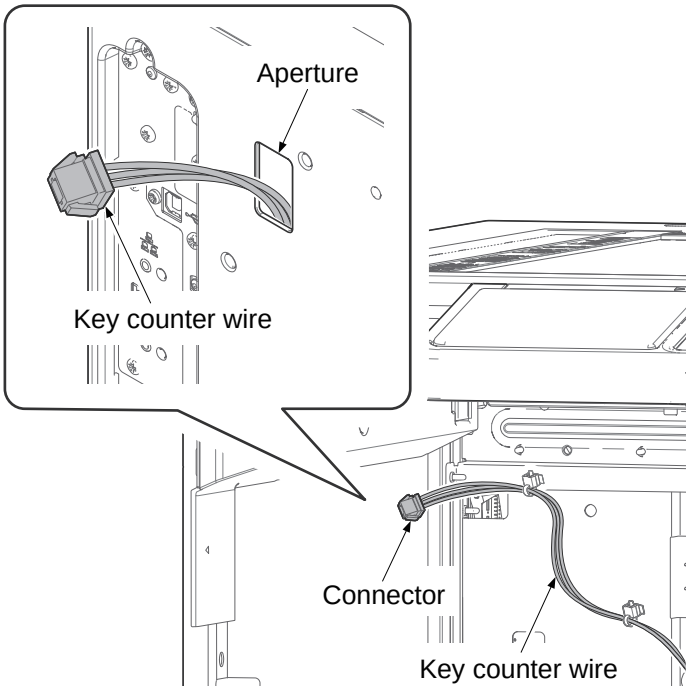

Figure 1-2-34

TONER
www.tonerplus.com.ua

(3) Install the cassette heater

Cassette heater installation requires the following parts:

Parts	Quantity	Part.No.
Parts heater dehumidifier 120 SP	1	302KK94430
Parts heater dehumidifier 240 SP	1	302KK94440

Supplied parts of cassette heater set (302KK94430):

Parts	Quantity	Part.No.
Heater dehumidifier 120	1	302KK45060

Supplied parts of cassette heater set (302KK94440):

Parts	Quantity	Part.No.
Heater dehumidifier 240	1	302KK45070

Procedure

1. Remove seven screws.
2. Remove the rear cover by pulling upward and releaseing three hooks.

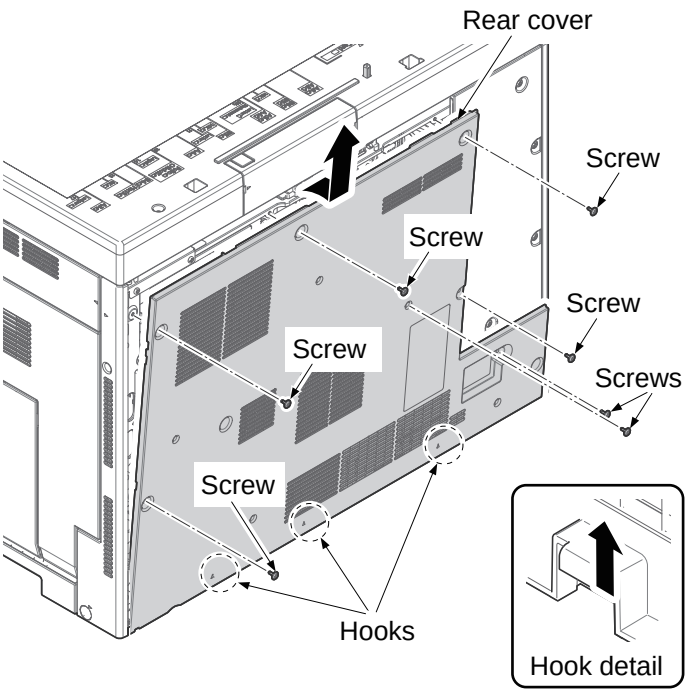

Figure 1-2-35

TONER
www.tonerplus.com.ua

3. Remove eight screws.
4. Remove the left cover by pulling upward and releasing four hooks.

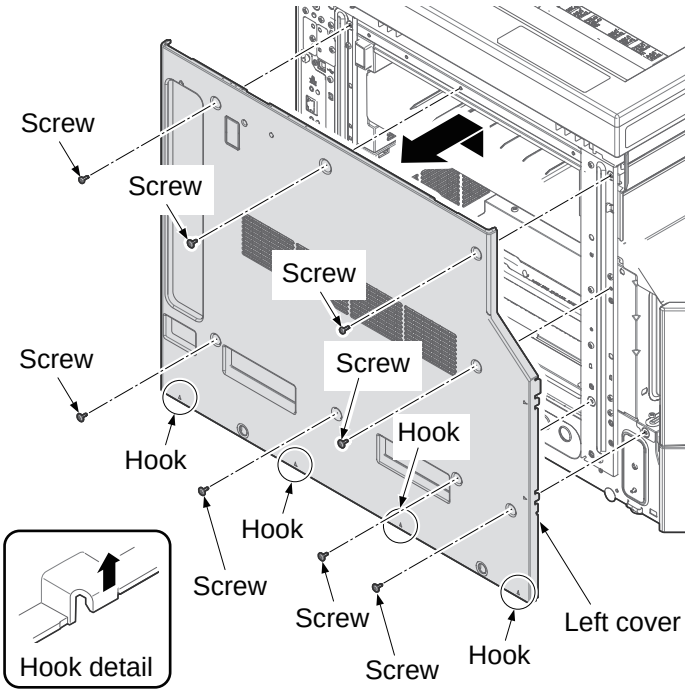

Figure 1-2-36

5. Open the front cover.
6. Unhook two hooks using flat screw driver and then remove the front left cover by pulling upward.

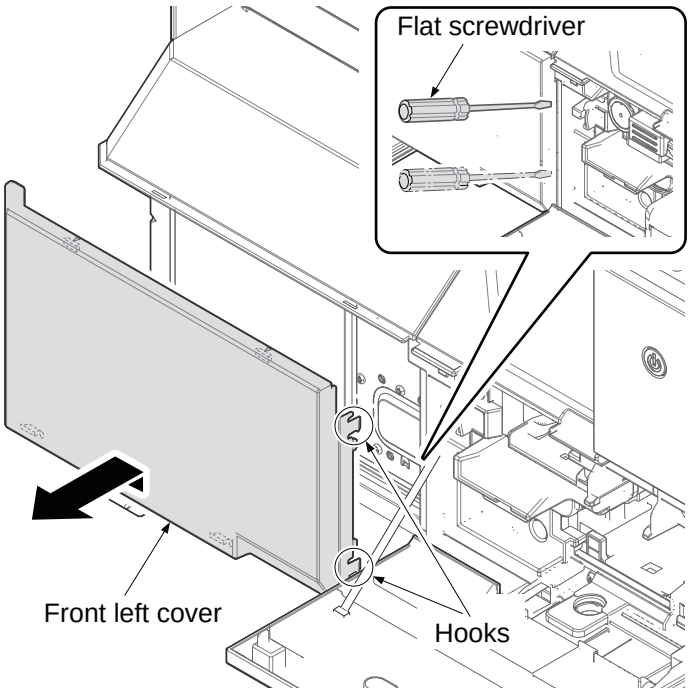

Figure 1-2-37

TONER
www.tonerplus.com.ua

7. Remove the left tray.

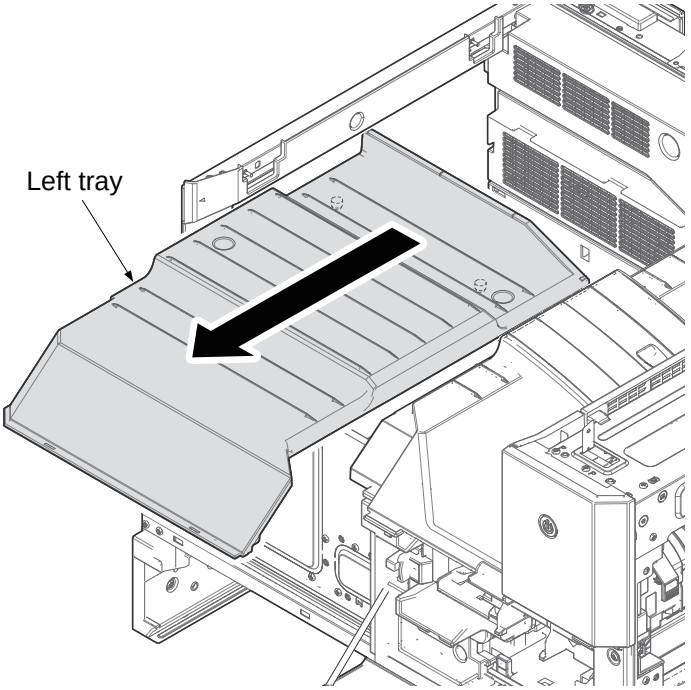

Figure 1-2-38

8. Remove a screw.
9. Remove the right tray.

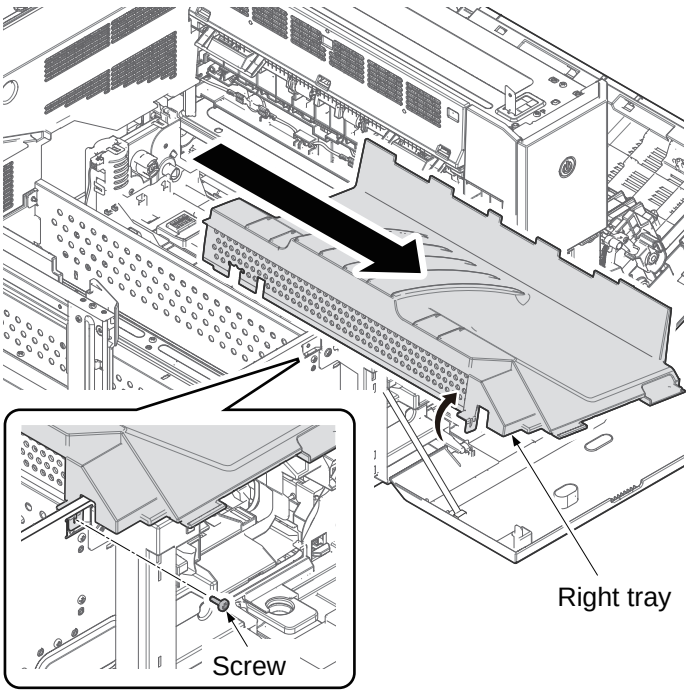

Figure 1-2-39

TONER
www.tonerplus.com.ua

10. Remove the screw.
11. Remove the exit rear cover forward with releasing two projections by lifting it up.

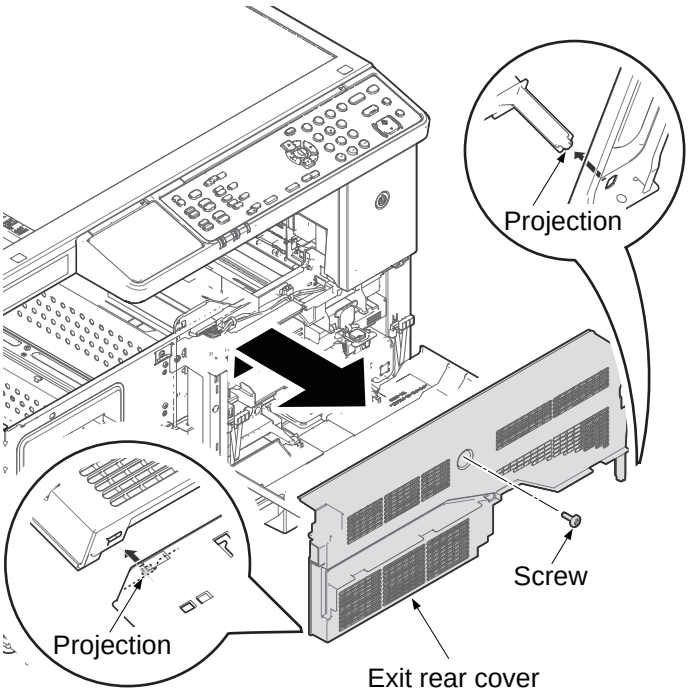

Figure 1-2-40

12. Remove the screw.
13. Release the projection by sliding the middle rear cover backward.
14. Remove the middle rear cover forward during turning it.

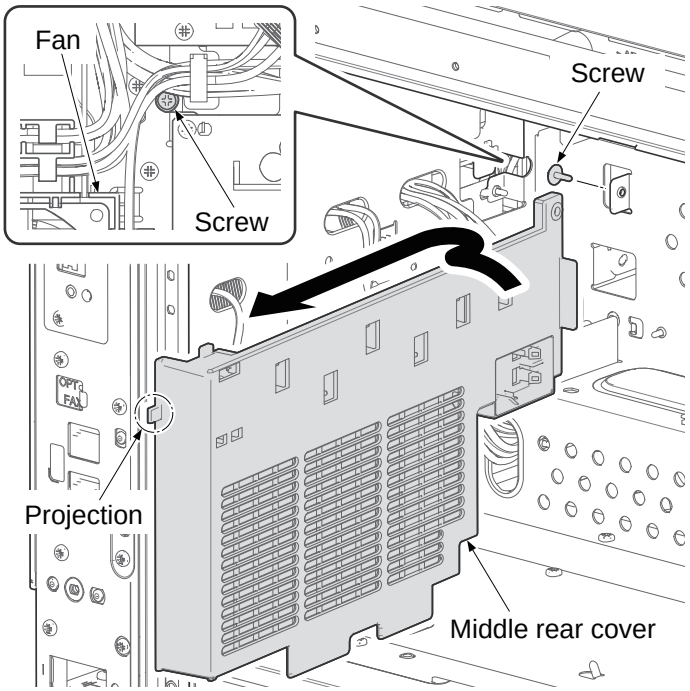

Figure 1-2-41

TONER
www.tonerplus.com.ua

15. Pass the heater wire through the aperture of the frame.
16. Set the heater to the cut-and-raised portion parts.
17. Bent two cut-and-raise portions and fix the heater.

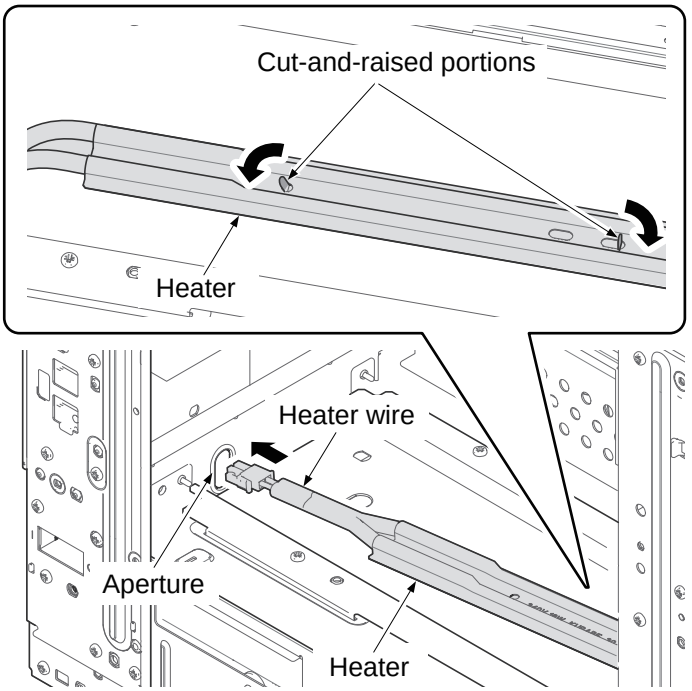

Figure 1-2-42

18. Pass the heater wire through two aperture parts.
19. Connect the connector of the heater wire to the connector on main unit.
20. Pass the heater wire through the wire saddle and fix.
21. Refit all the removed parts.

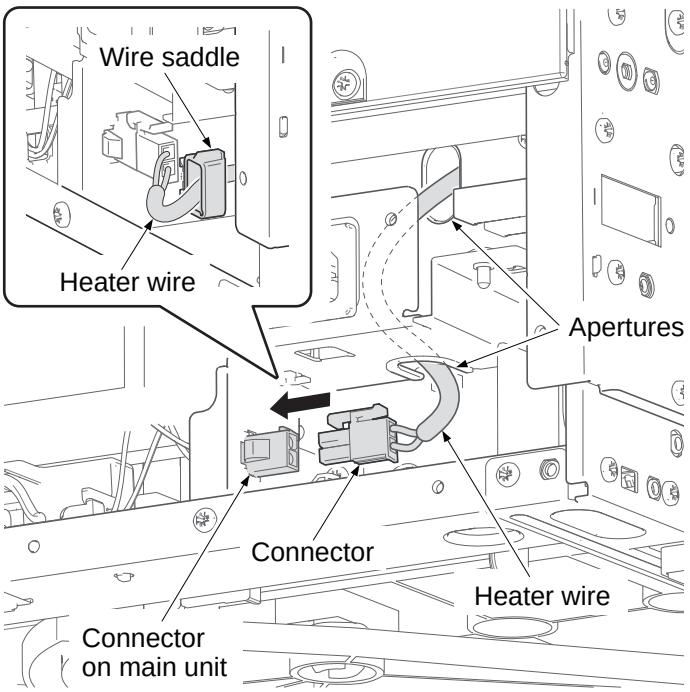

Figure 1-2-43

TONER
www.tonerplus.com.ua

This page is intentionally left blank.

TONER
www.tonerplus.com.ua

The machine is equipped with a maintenance function which can be used to maintain and service the machine.

(1) Executing a maintenance item

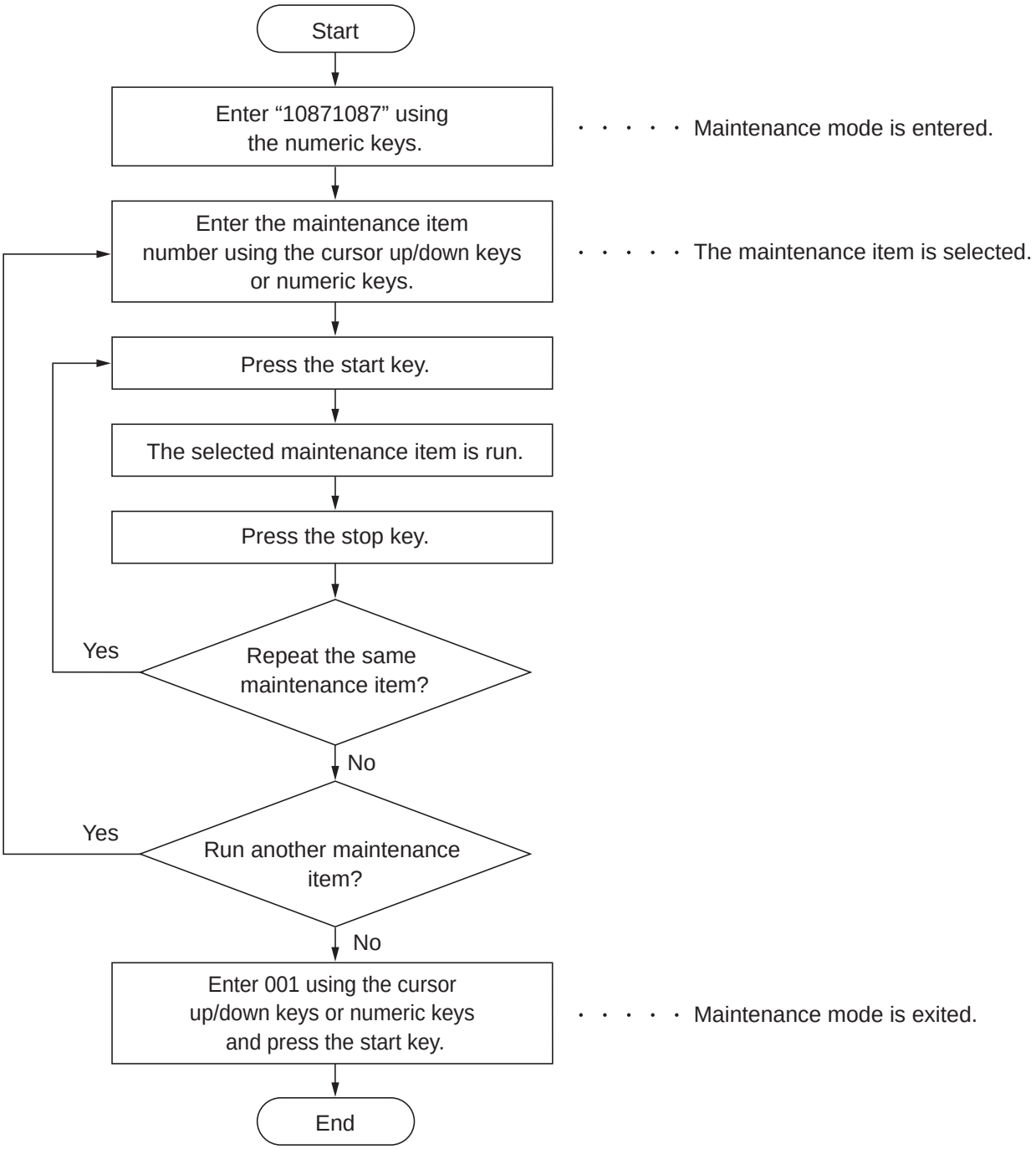

TONER
www.tonerplus.com.ua

(2) Maintenance modes item list

Section	Item No.	Content of maintenance item	Summary
General	U000	Mainte Report	It outputs to printing of each report, and USB.
	U001	Exit Mainte	Maintenance mode is canceled.
	U002	Set Factory Def	A factory-shipments setup (initialization) and packing mode are set up.
	U004	Machine No.	The display of machine serial No. and serial No. acquired from the engine at the time of substrate exchange are copied to MAIN backup.
	U019	Firm Version	Each soft version is displayed.
Initializa-tion	U021	Init memory	The backup data except an adjustment value is initialized.
Drive, paper feed and paper conveying system	U030	Chk motor	Each motor is operated.
	U031	Chk switch	The detection state of each conveyance switch is displayed.
	U032	Chk Clutch	Each clutch is operated.
	U033	Chk Solenoid	Each solenoid is operated.
	U034	Adj Paper timing	The timing data of leading edge and the center line adjustment data in a paper stan-dard are set up.
	U035	Adj Folio Sz	Length and horizontal size of FOLIO are set up.
	U037	Chk Fan Motor	FAN is operated.
	U051	Adj Paper Loop	The amount of bending is set up.
	U053	Adj Motor Speed	The speed compensation data of a feed motor and a main motor are set up.
Optical	U063	Adj shading	The shading position of a scanner is adjusted.
	U065	Adj Scn	The degrees of the main and auxiliary scanning direction at the time of table read-ing are adjusted.
	U066	Table timing	The timing of leading edge and trailing edge at the time of table reading are adjusted.
	U067	Table center	The position of main scanning direction at the time of table reading are adjusted.
	U068	DP Scn Start Pos	The timing of starting position at the time of DP reading are adjusted.
	U070	Adj DP Motor	The degree of auxiliary scanning direction are adjusted by adjusting the speed of time of DP reading.

TONER
www.tonerplus.com.ua

Section	Item No.	Content of maintenance item	Summary
Optical	U071	DP Timing	The timing of DP reading are adjusted.
	U072	DP Center	The center line of DP reading image are adjusted.
	U074	Adj DP input	The input light volume at the time of DP reading are adjusted.
	U089	Output MIP-PG	PG output is set up.
	U099	Detect Org Sz	The setting of sensing threshold value in the original size detection and operation are checked.
High voltage	U100	Main HV Output	Main high voltage, laser, a main motor, etc. are turned on, and the main high-voltage operations are checked.
	U101	1ST TC Output	References and setup, and outputs of a high-voltage control value other than main high voltage are checked.
	U108	Adj Sepa Sbias	The ON/OFF timing of separation shift bias is adjusted.
	U110	Drum Cnt	The display of a drum counter is set up.
	U111	Drum Time	The display of drum drive time is set up.
	U117	Drum No.	Drum serial No. is displayed.
	U118	Drum History	A drum history is displayed.
	U127	Clr Trans Cnt	The display of a transfer counter is set up.
Developer	U130	Set Toner Install	Installation of a toner is performed.
	U135	Chk Toner Motor	Operation of a toner motor is checked.
	U139	Temp/Humidity	Displays the temperature and humidity.
	U140	Adj Dev bias	Development bias is set up.
	U147	Set Toner Apply	Same as the above
	U150	Chk Toner Sensor	Display the state of the toner container sensor SW.
	U156	Adj Tnr Ctrl Lv	The amount of supply of a toner is adjusted.
	U157	Dev Time	The time of a developer drive is displayed and set up.
	U158	Dev Cnt	A developer counter is displayed and set up.
Fuser	U161	Adj Fuser Temp	Fuser control temperature is set up.
	U167	Clr Fuser Cnt	A fuser counter is displayed and set up.
	U199	Fuser Temp	Fuser temperature, a outside temperature, and absolute humidity are displayed.

TONER
www.tonerplus.com.ua

Section	Item No.	Content of maintenance item	Summary
Operation panel and support equipment	U203	Chk DP Ope	Each simulation is operated with DP simple substance.
	U204	Set Card/Counter	The presence or absence of a key card and a key counter is set up.
	U207	Chk Panel Key	An operation key is checked.
	U211	Set EH Connection	The presence or absence of a duplex unit is changed.
	U243	Chk DP motors	Operation of the motor of DP, a clutch, and a solenoid is checked.
	U244	Chk DP Switch	The state of the paper detection SW of DP is displayed.
Mode setting	U250	Mnt Cnt Pre-set	The preset value (number of sheets) of a maintenance cycle is set up.
	U251	Clr Mnt Cnt	A maintenance counter are displayed and the data are changed.
	U252	Set Dest	The destination is set up.
	U253	Sel D/S count	The copy count methods (double count), such as a total counter, are set up.
	U260	Set Count Mode	The timing (feeding or ejection) which a total count etc. count is changed.
	U265	Set Model Dest	The consecutive numbers of the OEM are set up.
	U285	Set Svc Sts Page	A coverage report output (permission or failure) is channged.
	U326	Set clean Bk Line	An announcement (a display -- or undisplayed) when black line is detected is set up.
	U332	Adj Calc Rate	The coefficient of the fixed form external application paper to A4 (or 11x8.5) paper is set up.
	U341	Set Prn Cass	The cassette stage only for a printer is set up.
	U343	Set Dup PriMode	A default (Duplex copy or Simplex copy) by a copy is set up.
	U345	Set Mnt Time Disp	The number of sheets of a check close display is set up.
	U346	Slct Sleep mode	A BAM conformity country is set up.

TONER
www.tonerplus.com.ua

Section	Item No.	Content of maintenance item	Summary
Image processing	U402	Adjust margin	The space of a leading edge, AC side, and a trailing edge is adjusted.
	U403	Scan Margin Tbl	The margin of reading data is adjusted by picture reading by a scanner.
	U404	Scan margin DP	The margin of reading data is adjusted by picture reading by DP
	U411	Scanner Auto Adjustment	A scanner and DP are adjusted automatically.
	U425	Set Target	The target value of an adjustment original is set up.
Others	U901	Clr Paper FD Cnt	The feed number of sheets count according to feed stage are displayed and cleared.
	U903	Clr paper JAM Cnt	The number of times of JAM generating are displayed and cleared.
	U904	Clr Svc call cnt	The number of times of C call generating are displayed and cleared.
	U905	Option Cnt	The each counter of DP and a sorter are displayed and cleared.
	U906	Reset Dis Func	A separation C call is reset.
	U910	Clr Coverage Dat	All the data of a black ratio data value is cleared.
	U927	Clr Chg/Life Cnt	The count for fee collection and a life count are cleared.
	U928	Life Cnt	A machine life counter are displayed and cleared.
	U935	Mnt Relay Board	A machine is set to enabled use in false to restoration at the time of child board failure.
	U942	Adj DPLloop Amt	The amount of DP bending is adjusted.
	U969	Toner Area Code	The area code for toner container discernment set up for every machine is referred to.

TONER
www.tonerplus.com.ua

(3) Contents of the maintenance mode items

U000	Mainte Report

Description
Outputs lists of the current settings of the maintenance items and paper jam and service call occurrences. Outputs the event log. Also sends output data to the SD card.

Purpose
To check the current setting of the maintenance items, or paper jam or service call occurrences. Before initializing or replacing the backup RAM, output a list of the current settings of the maintenance items to reenter the settings after initialization or replacement.

Method
1. Press the start key.
2. Select the item to be output using the cursor up/down keys.

Display	Output list
Maintenance	Output the maintenance report.
User Status	Output the user status report.
Service Status	Output the service status report.
Event	Output the event report.
All	Output the All report.

3. Press the start key. A list is output.
   * : When A4/Letter paper is available, a report of this size is output. If not, specify the paper feed location.

Method: Send to the SD card
1. Press the power key on the operation panel, and after verifying the main power indicator has gone off, switch off the main power switch.
2. Insert SDcard in SD card slot.
3. Turn the main power switch on.
4. Enter the maintenance item.
5. Press the start key.
6. Select the item to be send.
7. Select [Text] or [HTML].

Display	Output list
Print	A report is printed.
Text	It outputs to SD card in Text form.
HTML	It outputs to SD card in HTML form.

8. Press the start key.
   Output will be sent to the SD card.

Completion
Press the stop key. The screen for selecting a maintenance item No. is displayed.

TONER
www.tonerplus.com.ua

[Event log]

Event Log

MFP

TASKalfa2201

(1) Firmware version 2NG_2000.000.000 2013.02.17

(2) 2013/02/17 15:15

(3) [XXX_XXXX.XXX.XXX] [XXX_XXXX.XXX.XXX] **(5)**
(4) [XXX_XXXX.XXX.XXX] [XXX_XXXX.XXX.XXX] **(6)**

(8) Paper Jam Log

#	Count.	Event Descriprions	Date and Time
12	5555555	0501.01.08.01	2013/02/12 17:30
11	4444444	4002.01.08.01	2013/02/12 17:30
10	3333333	0501.01.08.01	2013/02/12 17:30
9	2222222	4002.01.08.01	2013/02/12 17:30
8	1111111	0501.01.08.01	2013/02/12 17:30
7	999999	4002.01.08.01	2013/02/12 17:30
6	888888	0501.01.08.01	2013/02/12 17:30
5	[illegible]	[illegible]	2013/02/12 17:30
4	[illegible]	[illegible]	2013/02/12 17:30
3	[illegible]	[illegible]	2013/02/12 17:30
2	444444	0501.01.08.01	2013/02/12 17:30
1	1	4002.01.08.01	2013/02/12 17:30

0501.01.08.01
(a) (b) (c) (d)

(9) Service Call Log

#	Count.	Service Code	Data and Time
8	1111111	01.6000	2013/02/12 17:30
7	999999	01.2100	2013/02/12 17:30
6	888888	01.4000	2013/02/12 17:30
5	777777	01.6000	2013/02/12 17:30
4	666666	01.2100	2013/02/12 17:30
3	555555	01.4000	2013/02/12 17:30
2	444444	01.6000	2013/02/12 17:30
1	1	01.2100	2013/02/12 17:30

(10) Maintenance Log

#	Count.	Item.	Data and Time
7	999999	01.21	2013/02/12 17:30
6	888888	01.40	2013/02/12 17:30
5	777777	01.60	2013/02/12 17:30
4	666666	01.21	2013/02/12 17:30
3	555555	01.40	2013/02/12 17:30
2	444444	01.60	2013/02/12 17:30
1	1	01.21	2013/02/12 17:30

(11) Unknown toner Log

#	Count.	Item.	Data and Time
5	1111111	01.00	2013/02/12 17:30
4	999999	01.00	2013/02/12 17:30
3	888888	01.00	2013/02/12 17:30
2	777777	01.00	2013/02/12 17:30
1	666666	01.00	2013/02/12 17:30

(12) Counter Log

(f)

J0000:	0	J4209:	0
J0100:	1	J4211:	1
J0101:	11	J4212:	11
J0104:	222	J4213:	222
J0105:	1	J4214:	1
J0106:	1	J4218:	1
J0107:	1	J4219:	1
J0110:	1	J9000:	1
J0111:	1	J9001:	1
J0211:	1	J9002:	1
J0212:	1	J9004:	1
J0213:	999	J9010:	999
J0501:	1	J9011:	1
J0502:	1	J9110:	1
J0503:	1	J9200:	1
J0504:	1	J9400:	1
J0508:	1	J9410:	1
J0509:	1		
J0512:	1		
J0513:	1		
J0514:	1		
J0518:	1		
J0519:	1		
J1403:	1		
J1404:	1		
J1413:	1		
J1414:	1		
J1604:	1		
J1614:	1		
J4002:	1		
J4003:	1		
J4012:	1		
J4013:	1		
J4014:	1		
J4201:	1		
J4202:	1		
J4203:	1		
J4204:	1		
J4208:	1		

(g)

C0000:	0
C0001:	1
C0002:	2
C0003:	3
C0004:	4
C0005:	5
C0006:	6
C0007:	7
C0008:	8
C0009:	9
C0010:	10
C0011:	11
C0012:	12
C0013:	13
C0014:	14
C0015:	15
C0016:	16
C0017:	17
C0018:	18
C0019:	19
C0020:	20
C0021:	21
C0022:	22
C0023:	23

(7) [XXXXXXXXXXXXXXXX]

Figure 1-3-1

TONER
www.tonerplus.com.ua

[Detail of event log]

No.	Items	Description		
(1)	System version			
(2)	System date			
(3)	Engine software version			
(4)	Engine boot software version			
(5)	Operation panel software version			
(6)	Option language version			
(7)	Machine serial number			
(8)	Paper Jam Log	#	Count.	Event
		Remembers 1 to 16 of occurrence. If the occurrence of the previous paper jam is less than 16, all of the paper jams are logged. When the occurrence excesseds 16, the oldest occurrence is removed.	The total page count at the time of the paper jam.	Log code (hexadecimal, 5 categories) (a) Cause of a paper jam (b) Paper source (c) Paper size (d) Paper type (e) Paper eject
		(a) Cause of paper jam (Hexadecimal)		
		For details on the case of paper jam, refer to Paper Misfeed Detection. (See page 1-4-2)		
		(b) Detail of paper source (Hexadecimal)		
		00: MP tray 01: Cassette 1 02: Cassette 2 (paper feeder) 03: Cassette 3 (paper feeder) 04: Cassette 4 (paper feeder) 05 to 09: Reserved		
		(c) Detail of paper size (Hexadecimal)		
		00: (Not specified) 01: Monarch 02: Business 03: International DL 04: International C5 05: Executive 06: Letter-R 86: Letter-E 07: Legal 08: A4R 88: A4E 09: B5R 89: B5E 0A: A3	0B: B4 0C: Ledger 0D: A5R 0E: A6 0F: B6 10: Commercial #9 11: Commercial #6 12: ISO B5 13: Custom size 1E: C4 1F: Postcard 20: Reply-paid postcard 21: Oficio II	22: Special 1 23: Special 2 24: A3 wide 25: Ledger wide 26: Full bleed paper (12 x 8) 27: 8K 28: 16K-R A8: 16K-E 32: Statement-R B2: Statement-E 33: Folio 34: Western type 2 35: Western type 4

TONER
www.tonerplus.com.ua

No.	Items	Description		
(8) cont.	Paper Jam Log	(d) Detail of paper type (Hexadecimal)		
		01: Plain 02: Transparency 03: Preprinted 04: Labels 05: Bond 06: Recycled 07: Vellum 08: Rough 09: Letterhead	0A: Color 0B: Prepunched 0C: Envelope 0D: Cardstock 0E: Coated 0F: 2nd side 10: Media 16 11: High quality	15: Custom 1 16: Custom 2 17: Custom 3 18: Custom 4 19: Custom 5 1A: Custom 6 1B: Custom 7 1C: Custom 8
(9)	Service Call Log	#	Count.	Service Code
		Remembers 1 to 8 of occurrence of self diagnostics error. If the occurrence of the previous diagnostics error is less than 8, all of the diagnostics errors are logged.	The total page count at the time of the self diagnostics error.	Self diagnostic error code (See page 1-4-20) Example: 01.6000 01: Self diagnostic error 6000: Self diagnostic error code number
(10)	Maintenance Log	#	Count.	item
		Remembers 1 to 8 of occurrence of replacement. If the occurrence of the previous replacement of toner container is less than 8, all of the occurrences of replacement are logged.	The total page count at the time of the replacement of the toner container. * :The toner replacement log is triggered by toner empty. This record may contain such a reference as the toner container is inserted twice or a used toner container is inserted.	Code of maintenance replacing item (1 byte, 2 categories) First byte (Replacing item) 01: Toner container Second byte (Type of replacing item) 00: Black First byte (Replacing item) 01: Toner container 02: Maintenance kit Second byte (Type of replacing item) 01: MK-4105

TONER
www.tonerplus.com.ua

No.	Items	Description		
(11)	Unknown Toner Log	#	Count.	item
		Remembers 1 to 5 of occurrence of unknown toner detection. If the occurrence of the previous unknown toner detection is less than 5, all of the unknown toner detection are logged.	The total page count at the time of the toner empty error with using an unknown toner container.	Unknown toner log code (1 byte, 2 categories) First byte 01: Toner container (Fixed) Second byte 00: Black
(12)	Counter Log Com-prised of three log counters including paper jams, self diagnos-tics errors, and replace-ment of the toner container.	(f) Paper jam	(g) Self diagnostic error	
		Indicates the log counter of paper jams depending on location. Refer to Paper Jam Log. All instances including those are not occurred are displayed.	Indicates the log counter of self diagnostics errors depending on cause. Example: C6000: 4 Self diagnostics error 6000 has happened four times.	

TONER
www.tonerplus.com.ua

[Service status page]

Service Status Page

MFP

(2) 12/12/2012 15:15

(1) Firmware version 2NG_2000.000.000 2012.12.12

(3)	**(4)**	**(5)**
[XXXXXXXX]	[XXXXXXXX]	[XXXXXXXX]

(21) FAX Information

(22)	Rings (Normal)	3
(23)	Rings (FAX/TEL)	3
(24)	Rings (TAD)	3

Memory status

(7)	Size	256.0 MB

Time

(8)	Local Time Zone	+01:00 Amsterdam
(9)	Date and Time	27/10/2010 12:00

Installed Options

(10)	Document Processor	Installed
(11)	Paper feeder 1	Cassette2
(12)	Paper feeder 2	Cassette3
(13)	Paper feeder 3	Not Installed

Print Coverage

(14) Average(%) / Usage Page(A4/Letter Conversion)

(15) Total
K: 1.10 / 1111111.11

(16) Copy
K: 1.10 / 1111111.11

(17) Printer
K: 1.10 / 1111111.11

(18) FAX
K: 1.10 / 1111111.11

(19) Period (07/11/2005 - 07/12/2005 08:05)

(20) Last Page (%) 1.00

1/2 **(25) (26)**

(27) 100/100/100/100/100/100/100/100/100/100/100/100

(28) 0000000/0000000/0000000/0000000/0000000/0000000/0000000/
0000000/0000000/0000000/0000000/
F00/U00/0/0/30/70/ **(29) (30) (31) (32) (33) (34)**

(35) 0/0/0/0/0/0/0/0/0/0/0/0/0/0/00/00/00/00/00/00/00/00

(36) 12345678/11223344/00001234abcd567800001234abcd5678/01234567890123456789012345678901/0008/00/07

(37) [3P8_9000.001.016] [3P8_9000.001.016] [3P8_9000.00.016]

(38) [2NG_81BR.001.010]

(39) 0000000000/11/302A/01/8791/01020304/01/010203040/000110002

(40) ABCDEFGHIJKL/

1

(6) [XXXXXXXXXXXXXXXXX]

Figure 1-3-2

TONER
www.tonerplus.com.ua

[Detail of service status page]

No.	Description	Supplement
(1)	Firmware version	-
(2)	System date	-
(3)	Engine software version	-
(4)	Engine boot version	-
(5)	Operation panel mask version	-
(6)	Machine serial number	-
(7)	Memory size	-
(8)	Local time zone	-
(9)	Report output date	Day/Month/Year hour:minute
(10)	Presence or absence of the document processor	Installed/Not installed
(11)	Presence or absence of the paper feeder	Cassette x/Not Installed
(12)	Presence or absence of the paper feeder	Cassette x/Not Installed
(13)	Presence or absence of the paper feeder	Cassette x/Not Installed
(14)	Page of relation to the A4/Letter	* :Print Coverage provides a close-matching reference of toner consumption and will not match with the actual toner consumption.
(15)	Average coverage for total	-
(16)	Average coverage for copy	-
(17)	Average coverage for printer	-
(18)	Average coverage for fax	-
(19)	Cleared date and output date	-
(20)	Coverage on the final output page	-
(21)	Fax kit information	This item is printed only when the fax kit is installed.
(22)	Number of rings	0 to 15
(23)	Number of rings before automatic switching	0 to 15
(24)	Number of rings before connecting to answering machine	0 to 15
(25)	Destination information	-
(26)	Area information	-
(27)	Print start timing	MPT Leading edge/MPT Center line/Cassette1 Leading edge/Cassette1 Center line/Cassette2 Leading edge/ Cassette2Center line/Cassette3 Leading edge/Cassette3 Center line/Cassette4 Leading edge/Cassette4 Center line/Duplex Leading edge/Duplex Center line

TONER
www.tonerplus.com.ua

No.	Description	Supplement
(28)	Life counter (The first line)	Machine life/MP tray/Cassette 1/Cassette 2/ Cassette 3/Cassette 4/Duplex
	Life counter (The second line)	Drum unit/Transfer roller/Developer unit/Fuser unit Maintenance kit
(29)	Panel lock information	0: Off 1: Partial lock 2: Full lock
(30)	USB information	U00: Not installed/U01: Full speed/U02: Hi speed
(31)	Paper handling information	0: Paper source unit select/1: Paper source unit
(32)	Black and white printing double count mode	0: All single counts 1: A3, Single count, Less than 420 mm (length) 2: Legal, Single count, 356 mm or less (length) 3: Folio, Single count, Less than 330 mm (length)
(33)	Billing counting timing	-
(34)	Temperature in machine	-
(35)	Media type attributes 1 to 28 (Not used: 18, 19, 20) * : For details on settings, refer to "Prescribe Commands Reference Manual.	Weight settings 0: Light/1: Normal 1 / 2: Normal 2 / 3: Normal 3/ 4: Heavy 1 / 5: Heavy 2 / 6: Heavy 3 / 7: Extra Heavy Duplex settings 0: Disable / 1: Enable
(36)	RFID information	-
(37)	Optional PF software version	-
(38)	Optional message version	-
(39)	Maintenance information	-
(40)	Drum serial number	-

TONER
www.tonerplus.com.ua

U001	Exit Mainte

Description
Exits the maintenance mode and returns to the normal copy mode.

Purpose
To exit the maintenance mode.

Method
1. Press the start key. The normal copy mode is entered.

U002	Set Factory Def

Description
Restores the machine conditions to the factory default settings.

Purpose
To move the mirror frame of the scanner to the position for transport.

Method
1. Press the start key.
2. Select [Mode1(All)].
3. Press the start key.
   It brings near by a left end so that the carriage of Scanner can be fixed.

Display	Description
Mode1(All)	A factory-default setup is performed.

4. Turn the main power switch off and on. Allow more than 5 seconds between Off and On.
   * : An error code is displayed in case of an initialization error.
   When errors occurred, turn main power switch off then on, and execute initialization using maintenance item U002.

Error codes

Codes	Description
0001	Controller
0020	Engine
0040	Scanner

TONER
www.tonerplus.com.ua

U004	Machine No.

Description
Sets or displays the machine number.

Purpose
To check or set the machine number.

Method
Press the start key.
If the machine serial number of engine PWB matches with that of main PWB.

Display	Description
Machine No.	Displays the machine serial number.

If the machine serial number of engine PWB does not match with that of main PWB.

Display	Description
Machine No.(Main)	Displays the machine serial number of main.
Machine No.(Eng)	Displays the machine serial number of engine.

If the machine serial number of engine PWB does not match with serial number of engine sub PWB.

Display	Description
Machine No.(Eng)	Displays the machine serial number of engine.

Setting
Carry out if the machine serial number does not match.
1. Select [Execute].
2. Press the start key. Writing of serial No. starts.
3. Turn the main power switch off and on. Allow more than 5 seconds between Off and On.

Completion
Press the stop key. The screen for selecting a maintenance item No. is displayed.

TONER
www.tonerplus.com.ua

U019	Firm Version

Description
Displays the part number of the ROM fitted to each board.

Purpose
To check the part number or to decide, if the newest version of ROM is installed.

Method
1. Press the start key. The ROM version are displayed.
2. Change the screen using the cursor up/down keys.

Display	Description
Main	Main ROM
MMI	Operation ROM
Engine	Engine ROM
Engine Boot	Engine booting
Option Language	Optional language ROM
DP	Document processor ROM
DP Boot	Document processor booting
PF1	Paper feeder1 ROM
PF1 Boot	Paper feeder1 booting
PF2	Paper feeder2 ROM
PF2 Boot	Paper feeder2 booting
PF3	Paper feeder3 ROM
PF3 Boot	Paper feeder3 booting

Completion
Press the stop key. The screen for selecting a maintenance item No. is displayed.

TONER
www.tonerplus.com.ua

U021	Init memory

Description

Initializes all settings, except those pertinent to the type of machine, namely each counter, service call history and mode setting. Also initializes backup RAM according to region specification selected in maintenance item U252 Setting the destination.

Purpose

To return the machine settings to their factory default.

Method

1. Press the start key.
2. Select [Execute].

Display	Description
Execute	Data is initialized according to destination information.

3. Press the start key.
   * : All data other than that for adjustments due to variations between machines is initialized based on the destination setting.
4. Turn the main power switch off and on. Allow more than 5 seconds between Off and On.
   * : An error code is displayed in case of an initialization error.
   When errors occurred, turn main power switch off then on, and execute initialization using maintenance item U021.

Error codes

Display	Description
0001	Controller
0020	Engine
0040	Scanner

TONER
www.tonerplus.com.ua

U030	Chk motor

Description
Drives each motor.

Purpose
To check the operation of each motor.

Method
1. Press the start key.
2. Select the motor to be operated.
   * : Press the start key. The operation starts.

Display	Description
Main	Main motor is turned on.
Exit(CW)	Eject motor is turned on clockwise.
Exit(CCW)	Eject motor is turned on counterclockwise.

3. To stop operation, press the stop key.

Completion
Press the stop key. The screen for selecting a maintenance item No. is displayed.

TONER
www.tonerplus.com.ua

U031	Chk switch

Description
Displays the on-off status of each paper detection switch or sensor on the paper path.

Purpose
To check if the switches and sensors for paper conveying operate correctly.

Method
1. Press the start key.
2. Turn each switch or sensor on and off manually to check the status.

Display	Description
Switch	State of the switch

* : State of the switches are represented by 0 and 1.
* : 4-digit numeric representation, each digit corresponds to the state of the switch.

Example: Regist switch is ON : 0001
Fuser switch is ON : 0010
Regist and fuser switches are ON : 0011

Completion
Press the stop key. The screen for selecting a maintenance item No. is displayed.

TONER
www.tonerplus.com.ua

U032	Chk Clutch

Description
Turns each clutch on.

Purpose
To check the operation of each clutch.

Method
1. Press the start key.
2. Select [Motor On] or [Motor Off].

Display	Description
Motor On	Main motor (MM) is turned on.
Motor Off	Main motor (MM) is not turned on.

3. Select the clutch to be operated.
4. Press the start key. The operation starts.

Display	Description
Feed	Feed clutch (PFCL) is turned on.
Regist	Registration clutch (RCL) is turned on.

5. To stop operation, press the stop key.

Completion
Press the stop key. The screen for selecting a maintenance item No. is displayed.

TONER
www.tonerplus.com.ua

U033	Chk Solenoid

Description
Turns each solenoid on.

Purpose
To check the operation of each solenoid.

Method
1. Press the start key.
2. Select [Motor On] or [Motor Off].

Display	Description
Motor On	Main motor (MM) is turned on.
Moter Off	Main motor (MM) is not turned on.

3. Select [MPT].
4. Press the start key. The operation starts.

Display	Description
MPT	MPT solenoid (MPSOL) is turned on.

4th digit	3rd digit	2nd digit	1st digit
-	-	Fuser	Regist

5. To stop operation, press the stop key.

Completion
Press the stop key. The screen for selecting a maintenance item No. is displayed.

TONER
www.tonerplus.com.ua

U034	Adj Paper timing

Description
Adjusts the leading edge registration or center line.

Purpose
Make the adjustment if there is a regular error between the leading edges of the copy image and original.
Make the adjustment if there is a regular error between the center lines of the copy image and original.

Method
1. Press the start key.
2. Select the item to be adjusted.

Display	Description
LSU Out Top	Leading edge registration adjustment
LSU Out Left	Center line adjustment

Adjustment: LSU Out Top
1. Press the system menu key.
2. Press the start key to output a test pattern.
3. Press the system menu key.
4. Select the item to be adjusted.

[LSU Out Top]

Display	Description	Setting range	Initial setting	Change in value per step
MPT	Paper feed from MP tray.	-100 to 100	0	1
Cas1	Paper feed from cassette1.	-100 to 100	9	1
Cas2	Paper feed from cassette2.	-100 to 100	9	1
Cas3	Paper feed from cassette3.	-100 to 100	9	1
Cas4	Paper feed from cassette4.	-100 to 100	9	1
Duplex	Duplex mode. (second)	-100 to 100	-6	1

TONER
www.tonerplus.com.ua

5. Change the setting value using the cursor +/- or numeric keys.
   For output example 1, increase the value. For output example 2, decrease the value

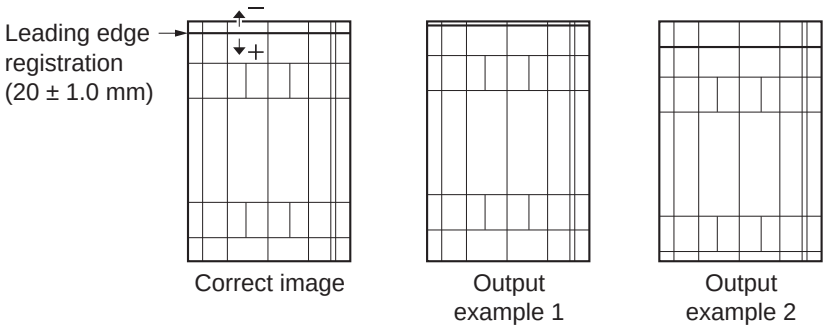

Figure 1-3-3

6. Press the start key. The value is set.

Caution
Check the copy image after the adjustment. If the image is still incorrect, perform the following adjustments in maintenance mode.

U034 -------- U066 -------- U071

(P.1-3-31) (P.1-3-35)

Adjustment: LSU Out Left

1. Press the system menu key.
2. Press the start key to output a test pattern.
3. Press the system menu key.
4. Select the item to be adjusted.

[LSU Out Left]

Display	Description	Setting range	Initial setting	Change in value per step
MPT	Paper feed from MP tray.	-100 to 100	0	1
Cas1	Paper feed from cassette1.	-100 to 100	-16	1
Cas2	Paper feed from optional cassette2.	-100 to 100	-16	1
Cas3	Paper feed from optional cassette3.	-100 to 100	-16	1
Cas4	Paper feed from optional cassette4.	-100 to 100	-16	1
Duplex	Duplex mode. (second)	-100 to 100	0	1

TONER
www.tonerplus.com.ua

5. Change the setting value using the +/- keys or numeric keys.
   For output example 1, increase the value. For output example 2, decrease the value.

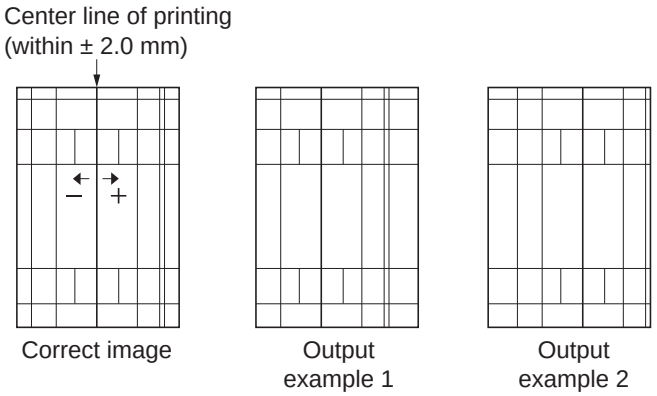

6. Press the start key. The value is set.

Caution

Check the copy image after the adjustment. If the image is still incorrect, perform the following adjustments in maintenance mode.

U034 -------- U067 -------- U072

(P.1-3-32) (P.1-3-37)

Completion

Press the stop key. The screen for selecting a maintenance item No. is displayed.

TONER
www.tonerplus.com.ua

U035	Adj Folio Sz

Description
Changes the printing area for copying on folio paper.

Purpose
To prevent cropped images on the trailing edge or left/right side of copy paper by setting the actual printing area for folio paper.

Setting
1. Press the start key.
2. Select the item to be set.
3. Change the setting value using the +/- keys.

Display	Description	Setting range	Initial setting
Length	Height of a FOLIO paper.	330 to 356(mm)	330
Width	Width of a FOLIO paper.	200 to 220(mm)	210

4. Press the start key. The value is set.

Completion
Press the stop key. The screen for selecting a maintenance item No. is displayed.

U037	Chk Fan Motor

Description
Drives each fan motor.

Purpose
To check the operation of each fan motor.

Method
1. Press the start key.
2. Select the fan motor to be operated.
3. Press the start key. The operation starts.

Display	Description
Main board	Main board fan motor is turned on.

* : A fan motor cannot be operated while an engine drives.

4. To stop operation, press the stop key.

Completion
Press the stop key. The screen for selecting a maintenance item No. is displayed.

TONER
www.tonerplus.com.ua

U051	Adj Paper Loop

Description
Adjusts the deflection in the paper at the registration roller.

Purpose
Make the adjustment if the leading edge of the copy image is missing or varies randomly, or if the copy paper is Z-folded.

Method
1. Press the system menu key.
2. Place an original and press the start key to make a test copy.
3. Press the system menu key.
4. Select the item to be adjusted.

Display	Description	Setting range	Initial setting	Change in value per step
MPT	Paper feed from MP tray.	-30 to 20	0	1
Cassette	Paper feed from cassette.	-30 to 20	0	1
PF	Paper feed from paper feeder.	-30 to 20	0	1
Duplex	Duplex mode (second)	-30 to 20	0	1

5. Change the setting value using the +/- keys or numeric keys.
   For output example 1, increase the value. For output example 2, decrease the value.
   The greater the value, the larger the deflection; the smaller the value, the smaller the deflection.

A feed setup is performed as follws.

Select item	Feed	Paper type	Duplex mode
LSU Out Top :MTP	MP Tray	Plain	OFF
LSU Out Top :Cas1	Cassette1	Plain	OFF
LSU Out Top :Cas2	Cassette2	Plain	OFF
LSU Out Top :Cas3	Cassette3	Plain	OFF
LSU Out Top :Cas4	Cassette4	Plain	OFF
LSU Out Top :Duplex	Cassette1	Plain	ON
LSU Out Left :MTP	MP Tray	Plain	OFF
LSU Out Left :Cas1	Cassette1	Plain	OFF
LSU Out Left :Cas2	Cassette2	Plain	OFF
LSU Out Left :Cas3	Cassette3	Plain	OFF
LSU Out Left :Cas4	Cassette4	Plain	OFF
LSU Out Left :Duplex	Cassette1	Plain	ON

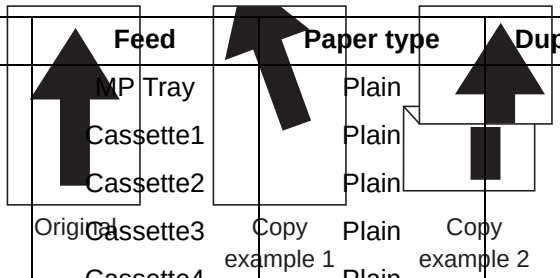

Figure 1-3-4

6. Press the start key. The value is set.

Completion
Press the stop key. The indication for selecting a maintenance item No. appears.

TONER
www.tonerplus.com.ua

U053	Adj Motor Speed

Description
Performs fine adjustment of the speeds of the motors.

Purpose
To adjust the speed of the respective motors when the magnification is not correct.

Setting
1. Press the start key.
2. Select the item to be set.
3. Change the setting value using the +/- keys.

Display	Description	Setting range	Initial setting	Change in value per step
Main	Main motor speed adjustment.	-50 to 50	0	1
Polygon	Polygon motor speed adjustment.	-50 to 50	0	1
Exit	Eject motor speed adjustment.	-50 to 50	0	1
MPF	Main motor MPF speed adjustment.	-50 to 50	-2	1

4. Press the start key. The value is set.

Completion
Press the stop key. The screen for selecting a maintenance item No. is displayed.

TONER
www.tonerplus.com.ua

U063	Adj shading

Description
Changes the shading position of the scanner.

Purpose
Used when the white line continue to appear longitudinally on the image after the shading plate is cleaned.
This is due to flaws or stains inside the shading plate. To prevent this problem, the shading position should be changed so that shading is possible without being affected by the flaws or stains.

Setting
1. Press the start key.
2. Select [Position].
3. Change the setting value using the +/- keys or numeric keys.

Display	Description	Setting range	Initial setting	Change in value per step
Position	Shading position.	-6 to 18	0	1

Increasing the value moves the shading position toward the machine left, and decreasing it moves the position toward the machine right.

4. Press the start key. The value is set.

Supplement
While this maintenance item is being executed, copying from an original is available in interrupt copying mode (which is activated by pressing the system menu key).

Completion
Press the stop key. The screen for selecting a maintenance item No. is displayed.

TONER
www.tonerplus.com.ua

U065	Adj Scn

Description
Adjusts the magnification of the original scanning.

Purpose
Make the adjustment if the magnification in the main scanning direction is incorrect.
Make the adjustment if the magnification in the auxiliary scanning direction is incorrect.

Caution
The magnification adjustment along the main scanning direction could cause black streaks depending on the content of the original document.
Adjust the magnification of the scanner in the following order.

U039 -------- U065 (main scanning direction) -------- U065 (auxiliary scanning direction)
(P.1-3-29) (P.1-3-29)

Method
1. Press the start key.
2. Press the system menu key.
3. Place an original and press the start key to make a test copy.
4. Press the system menu key.
5. Select the item to be adjusted.

Display	Description	Setting range	Initial setting	Change in value per step
Y Zoom	Scanner magnification in the main scanning direction.	-75 to 75	0	1
X Zoom	Scanner magnification in the auxiliary scanning direction.	-125 to 125	0	1

Adjustment: [Y Zoom]
* : Change the setting value using the +/- keys or numeric keys.
For copy example 1, increase the value. For copy example 2, decrease the value.
Increasing the setting enlarges the image and decreasing it narrows the image.

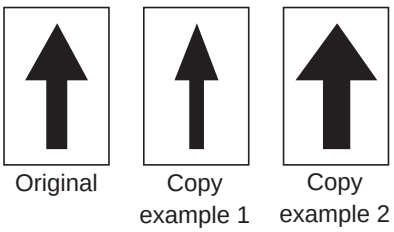

Figure 1-3-5

6. Press the start key. The value is set.

TONER
www.tonerplus.com.ua

Adjustment: [X Zoom]

1. Change the setting value using the +/- keys or numeric keys.
   For copy example 1, increase the value. For copy example 2, decrease the value.
   Increasing the value makes the image longer, while decreasing the value makes the image shorter.

Original | Copy example 1 | Copy example 2

Figure 1-3-6

2. Press the start key. The value is set.

Completion

Press the stop key. The screen for selecting a maintenance item No. is displayed.

TONER
www.tonerplus.com.ua

U066	Table timing

Description
Adjusts the scanner leading edge registration of the original scanning.

Purpose
Make the adjustment if there is a regular error between the leading edges of the copy image and original.

Adjustment
1. Press the start key.
2. Press the system menu key.
3. Place an original and press the start key to make a test copy.
4. Press the system menu key.
5. Select the item to be adjusted.

Display	Description	Setting range	Initial setting	Change in value per step
Front	Scanner leading edge registration.	-45 to 45	0	1

6. Change the setting value using the +/- keys or numeric keys.
   For copy example 1, increase the value. For copy example 2, decrease the value.
   Increasing the value moves the image forward and decreasing the value moves the image backward.

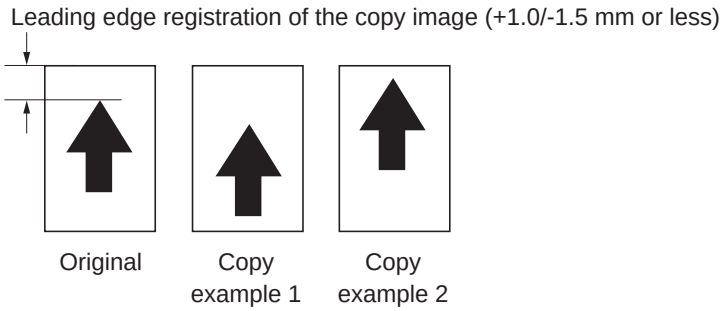

Figure 1-3-7

7. Press the start key. The value is set.

Caution
If the above adjustment does not optimize the leading edge registration, proceed with the following maintenance modes.

U034 --------- U065 -------- U066

(P.1-3-22) (P.1-3-29)

Completion
Press the stop key. The screen for selecting a maintenance item No. is displayed.

TONER
www.tonerplus.com.ua

U067	Table center

Description
Adjusts the scanner center line of the original scanning.

Purpose
Make the adjustment if there is a regular error between the center lines of the copy image and original.

Adjustment
1. Press the start key.
2. Press the system menu key.
3. Place an original and press the start key to make a test copy.
4. Press the system menu key.
5. Select the item to be adjusted.

Display	Description	Setting range	Initial setting	Change in value per step
Front	Scanner center line	-40 to 40	0	1

6. Change the setting value using the +/- keys or numeric keys.
   For copy example 1, decrease the value. For copy example 2, increase the value.
   Increasing the value moves the image leftward and decreasing it moves the image rightward.

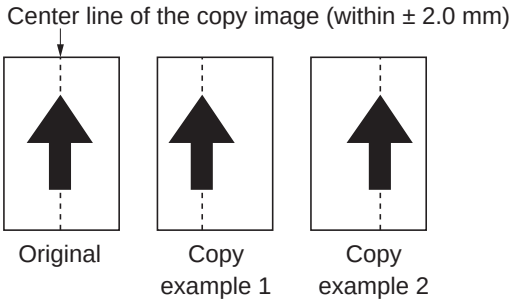

Figure 1-3-8

7. Press the start key. The value is set.

Caution
If the above adjustment does not optimize the center line, proceed with the following maintenance modes.

U034 --------- U065 --------- U067

(P.1-3-22) (P.1-3-29)

Completion
Press the stop key. The screen for selecting a maintenance item No. is displayed.

TONER
www.tonerplus.com.ua

U068	DP Scn Start Pos

Description

Adjusts the position for scanning originals from the DP. Performs the test copy at the four scanning positions after adjusting.

Purpose

Used when the image fogging occurs because the scanning position is not proper when the DP is used. Run U071 to adjust the timing of DP leading edge when the scanning position is changed.

Setting

1. Press the start key.

Display	Description	Setting range	Initial setting	Change in value per step
DP Read	Starting position adjustment for scanning originals.	-55 to 55	0	1
Black Line	Scanning position for the test copy originals.	0 to 3	0	1

2. Select [DP Read].
3. Change the setting using the +/- keys or numeric keys.
   When the setting value is increased, the scanning position moves to the right and it moves to the left when the setting value is decreased.
4. Press the start key. The value is set.
5. Select [Black Line].
6. Change the setting using the +/- keys or numeric keys.
7. Press the start key. The value is set.
8. Set the original (the one which density is known) in the DP and press the system menu key.
9. Press the start key. Test copy is executed.
10. Perform the test copy at each scanning position with the setting value from 0 to 3 and check that no black line appears and the image is normally scanned.

Completion

Press the stop key. The screen for selecting a maintenance item No. is displayed.

TONER
www.tonerplus.com.ua

U070	Adj DP Motor

Description
Adjusts the DP original scanning speed.

Purpose
Make the adjustment if the magnification is incorrect in the auxiliary scanning direction when the DP is used.

Adjustment
1. Press the start key.
2. Press the system menu key.
3. Place an original on the DP and press the start key to make a test copy.
4. Press the system menu key.
5. Select the item to be adjusted.

Display	Description	Setting range	Initial setting	Change in value per step
X Zoom(F)	Main scanning direction. (Front)	-125 to 125	0	1
X Zoom(B)	Main scanning direction. (Back)	-125 to 125	0	1

Adjustment
6. Change the setting value using the +/- keys or numeric keys.
   For copy example 1, increase the value. For copy example 2, decrease the value.
   Increasing the setting enlarges the image and decreasing it narrows the image.

Original Copy example 1 Copy example 2

Figure 1-3-9

7. Press the start key. The value is set.

Completion
Press the stop key. The screen for selecting a maintenance item No. is displayed.

TONER
www.tonerplus.com.ua

U071	DP Timing

Description
Adjusts the DP original scanning timing.

Purpose
Make the adjustment if there is a regular error between the leading or trailing edges of the original and the copy image when the DP is used.

Method
1. Press the start key.
2. Press the system menu key.
3. Place an original on the DP and press the start key to make a test copy.
4. Press the system menu key.
5. Select the item to be adjusted.

Display	Description	Setting range	Initial setting	Change in value per step
Front Head	Leading edge registration. (first side)	-30 to 30	0	1
Front Tail	Trailing edge registration. (first side)	-30 to 30	0	1
Back Head	Trailing edge registration. (first side)	-30 to 30	0	1
Back Tail	Trailing edge registration. (second side)	-30 to 30	0	1

Adjustment: Leading edge registration
1. Change the setting value using the +/- keys or numeric keys.
   For copy example 1, increase the value. For copy example 2, decrease the value.
   Increasing the value moves the image forward and decreasing the value moves the image backward.

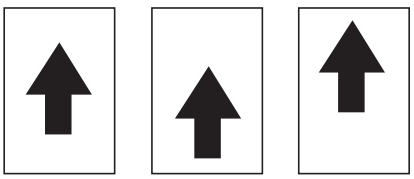

Figure 1-3-10

2. Press the start key. The value is set.

Caution
If the first side is adjusted, check the second side and if adjustment is required, carry out the adjustment.
If the above adjustment does not optimize the leading edge registration, proceed with the following maintenance modes.

U034 -------- U071

(P.1-3-22)

TONER
www.tonerplus.com.ua

Adjustment: Trailing edge registration

* : Change the setting value using the +/- keys or numeric keys.
For copy example 1, increase the value. For copy example 2, decrease the value.

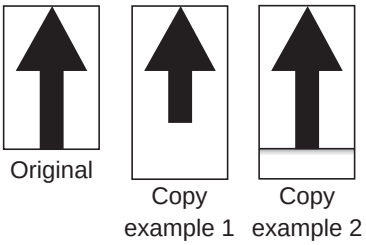

Figure 1-3-11

3. Press the start key. The value is set.

Completion

Press the stop key. The screen for selecting a maintenance item No. is displayed.

TONER
www.tonerplus.com.ua

U072	DP Center

Description
Adjusts the scanning start position for the DP original.

Purpose
Make the adjustment if there is a regular error between the centers of the original and the copy image when the DP is used.

Adjustment
1. Press the start key.
2. Press the system menu key.
3. Place an original on the DP and press the start key to make a test copy.
4. Press the system menu key.
5. Select the item to be adjusted.

Display	Description	Setting range	Initial setting	Change in value per step
Front	DP center line. (first side)	-40 to 40	0	1
Back	DP center line. (second side)	-40 to 40	0	1

6. Change the setting value using the +/- keys or numeric keys.
   For copy example 1, increase the value. For copy example 2, decrease the value.
   Increasing the value moves the image rightward and decreasing it moves the image leftward.

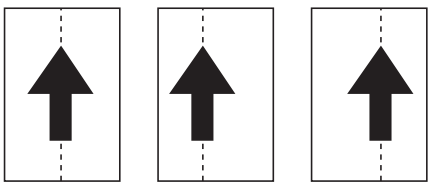

Figure 1-3-12

7. Press the start key. The value is set.

Caution
If the first side is adjusted, check the second side and if adjustment is required, carry out the adjustment.
If the above adjustment does not optimize the center line, proceed with the following maintenance modes.

U034 -------- U065 -------- U067 -------- U072

(P.1-3-22) (P.1-3-29) (P.1-3-32)

Completion
Press the stop key. The screen for selecting a maintenance item No. is displayed.

TONER
www.tonerplus.com.ua

U074	Adj DP input

Description
Adjusts the luminosity of the exposure lamp for scanning originals from the DP.

Purpose
Used if the exposure amount differs significantly between when scanning an original on the platen and when scanning an original from the DP.

Setting
1. Press the start key.
2. Change the setting using the +/- or numeric keys.

Display	Description	Setting range	Initial setting	Change in value per step
Coefficient	DP input light luminosity.	0 to 3	0	1

Settings 0: No correction / 1: Slight correction / 2: Medium correction / 3: Strong correction

3. Press the start key. The value is set.

Supplement
While this maintenance item is being executed, copying from an original is available in interrupt copying mode (which is activated by pressing the system menu key).

Completion
Press the stop key. The screen for selecting a maintenance item No. is displayed.

TONER
www.tonerplus.com.ua

U089	Output MIP-PG

Description
Selects and outputs the MIP-PG pattern created in the machine.

Purpose
To check copier status other than scanner when adjusting image printing, using MIP-PG pattern output (with-out scanning).

Method
1. Press the start key.
2. Select the MIP-PG pattern to be output and press the start key.

Display	PG pattern to be output	Purpose
Mono-Level	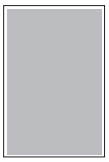	To check the drum quality
256-Level	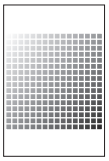	To check resolution reproducibility in printing
Gray Scale	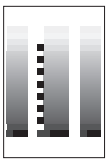	To check the laser scanner unit engine output characteristics

3. Press the system menu key.
4. Press the start key. A MIP-PG pattern is output.

Completion
Press the stop key. The screen for selecting a maintenance item No. is displayed.

TONER
www.tonerplus.com.ua

U099	Detect Org Sz

Description
Checks the operation of the original size sensor and sets the sensing threshold value.

Purpose
To adjust the sensitiveness of the sensor and size judgement time if the original size sensor malfunctions frequently due to incident light or the like.

Method
1. Press the start key.
   * : Select the item to e set.

Display	Description
Data1	Displays the width of an Original Area colored original document
B/W Level1	Setting original size detection threshold value
Data2	Displays the width of an Original Area colored original document (when DP is installed)

Method: [Data1/Data2]
1. Place the original and close the original cover or DP
2. The light source illuminates and the CCD sensor determines the width of the document. The original size sensor determines the document is vertical or horizontal. (The document is detected two times when the DP is installed.)

Display	Description	Setting range	Initial setting*
Org Area(R)	Detected original width size (R)	0 to 3640	0
Org Area(G)	Detected original width size (G)	0 to 3640	0
Org Area(B)	Detected original width size (B)	0 to 3640	0
Org Area	Detected original width size	0 to 308	0
Size SW L	Displays the original size sensor (OSS) ON/OFF	0 /1	**0**

Setting: [B/W Level1]
1. Select an item to be set.
2. Change the setting value using the +/- keys or numeric keys.

Display	Description	Setting range	Initial setting*
Orig(R1)	Original1 threshold value (R1)	0 to 255	50
Orig(R2)	Original2 threshold value (R2)	0 to 255	50
Orig(R3)	Original3 threshold value (R3)	0 to 255	50
Orig(G1)	Original1 threshold value (G1)	0 to 255	50
Orig(G2)	Original2 threshold value (G2)	0 to 255	50
Orig(G3)	Original3 threshold value (G3)	0 to 255	50
Orig(B1)	Original1 threshold value (B1)	0 to 255	50
Orig(B2)	Original2 threshold value (B2)	0 to 255	50

TONER www.tonerplus.com.ua

Orig(B3)	Original3 threshold value (B3)	0 to 255	50
Light Src(R)	Light source threshold value (R)	0 to 255	49
Light Src(G)	Light source threshold value (G)	0 to 255	49
Light Src(B)	Light source threshold value (B)	0 to 255	49

* : Reducing the value increases the sensitivity of the sensor allowing a document with more density to be detected, however, the document mat could be detected as an original document.
If the values vary excessively, mal-detection could occur depending on how a document is placed.

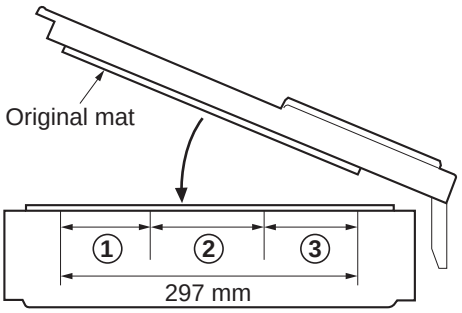

Fig.	Original R/G/B	Original width size range	
①	1	A4R to A3	8.5" to 11"
②	2	B6R to A4R	5.5" to 8.5"
③	3	to B6R	to 5.5"

Figure 1-3-13

3. Press the start key. The value is set.

Completion

Press the stop key. The screen for maintenance item No. is displayed.

TONER
www.tonerplus.com.ua

U100	Main HV Output

Description
Performs main charging.

Purpose
To check main charging.

Method
1. Press the start key.
2. Select the item to be set.

Display	Description
Charged Voltage	
High Altitude	

Setting: [Charged Voltage]
1. Select the item to be set.
2. Change the value using the +/- or numeric keys.

Display	Description	Setting range	Initial setting
Execute	Aging is performed.	-	-
Voltage	The amount of adjustments of charged voltage.	-100 to 100	0

3. Press the start key. The value is set.

Setting: [Charged Voltage]
1. Select the mode to be set.

Display	Description
Mode1	Set mode0 of high altitude mode.
Mode2	Set mode1 of high altitude mode.
Mode3	Set mode2 of high altitude mode.

* : Initial setting: 0

2. Press the start key. The value is set.

Completion
Press the stop key. The screen for maintenance item No. is displayed.

TONER
www.tonerplus.com.ua

U101	1ST TC Output

Description
Sets the control voltage for the primary transfer.

Purpose
To change the setting when any density problems, such as too dark or light, occur.

Method
1. Press the start key.
2. Select the item to be adjusted.
3. Change the value using the +/- or numeric keys.

Display	Description	Setting range	Initial setting
On Tmg	Transfer bias ON timing.	-1000 to 1000	0
Off Tmg	Transfer bias OFF timing.	-1000 to 1000	0
Pre On Tmg	Transfer bias Pre ON timing.	-1000 to 1000	0
Bias(L)	Transfer bias for large sizes.	0 to 2000	80
Bias(M)	Transfer bias for medium sizes.	0 to 2000	110
Bias(S)	Transfer bias for small sizes.	0 to 2000	140
Bias H(L)	Half Transfer bias for large sizes.	0 to 2000	100
Bias H(M)	Half Transfer bias for medium sizes.	0 to 2000	150
Bias H(S)	Half Transfer bias for small sizes.	0 to 2000	200

4. Press the start key. The value is set.

Supplement
While this maintenance item is being executed, copying from an original is available in interrupt copying mode (which is activated by pressing the system menu key).

Completion
Press the stop key. The screen for maintenance item No. is displayed.

TONER
www.tonerplus.com.ua

U108	Adj Sepa Sbias

Description
Adjusts output of separation shift bias and ON/OFF timing.

Purpose
To set when the separated malfunction of the paper occurs.

Method
1. Press the start key.
2. Select the item to be set.

Display	Description
Normal Mormal23 Light	

Setting:[Normal/Mormal23]
1. Select the item to be set.
2. Change the value using the +/- or numeric keys.

Display	Description	Setting range	Initial setting
Mode	ON/OFF timing adjustment with paper position.	0 to 7	0/6
Sepa	Separation mode of plain paper.	2 to 3	2/2

3. Press the start key. The value is set.

Setting:[Light]
1. Select the item to be set.
2. Change the value using the +/- or numeric keys.

Display	Description	Setting range	Initial setting
Sepa	Separation mode of plain paper.	1 to 2	0/2

3. Press the start key. The value is set.

Supplement
While this maintenance item is being executed, copying from an original is available in interrupt copying mode (which is activated by pressing the system menu key).

Completion
Press the stop key. The screen for selecting a maintenance item No. is displayed.

TONER
www.tonerplus.com.ua

U110	Drum Cnt

Description
Displays the drum counts for checking.

Purpose
To check the drum status.

Method
1. Press the start key. The current drum counts is displayed.

Display	Description
K	Drum drive time (K).

Completion
Press the stop key. The screen for selecting a maintenance item No. is displayed.

U111	Drum Time

Description
Displays the drum drive time for checking a figure, which is used as a reference when correcting the high voltage based on time.

Purpose
To check the drum status.

Method
1. Press the start key. The drum drive time is displayed.

Display	Description
K	Drum drive time. (K)

Completion
Press the stop key. The screen for selecting a maintenance item No. is displayed.

TONER
www.tonerplus.com.ua

U117	Drum No.

Description
A drum number is displayed.

Purpose
It is used for the check of a drum number.

Method
1. Press the start key. The drum number is displayed.

Display	Description
K	Drum No. (K)

Completion
Press the stop key. The screen for selecting a maintenance item No. is displayed.

U118	Drum History

Description
Displays the past record of machine number and the drum counter.

Purpose
To check the count value of machine number and the drum counter.

Method
1. Press the start key.
2. Select [K].

Display	Description
K	Drum past record

The history of a machine number and a drum counter for each color is displayed by three cases.

Display	Description
Machine History1 - 3	Historical records of the machine number
Cnt History1 - 3	Historical records of drum counter

Completion
Press the stop key. The screen for selecting a maintenance item No. is displayed.

TONER
www.tonerplus.com.ua

U127	Clr Trans Cnt

Description
Displays and clears the counts of the transfer counter.

Purpose
To check the count after replacement of the transfer roller. Also to clear the counts after replacing transfer roller.

Method
1. Press the start key. The current counts of the transfer counter is displayed.

Display	Description
Cnt	Transfer counter.
Clear	Value is cleared.

Clearing
1. Select [Clear].
2. Press the start key. The counter value is cleared.

Completion
Press the stop key. The screen for selecting a maintenance item No. is displayed.

U130	Set Toner Install

Description
To set the toner installation mode.

Purpose
Toner installation is performed at the time of a machine setup.

1. Press the start key.
2. Select [Excute].
3. Press the start key. The operation starts.

Display	Description
Excute	Execute toner install.

* : A toner motor cannot be operated while an engine drives.

Completion
Press the stop key. The screen for selecting a maintenance item No. is displayed.

TONER
www.tonerplus.com.ua

U135	Chk Toner Motor

Description
To check the Toner Motor Operation.

Purpose
To check the Toner Motor Operation.

1. Press the start key.
2. Select [Excute].
3. Press the start key.

Display	Description
Excute	Execute toner motor is turned on.

* : A toner motor cannot be operated while an engine drives.

Completion
Press the stop key. The screen for selecting a maintenance item No. is displayed.

U139	Temp/Humidity

Description
Displays the detected temperature and humidity outside the machine.

Purpose
To check the temperature and humidity outside the machine

Method
1. Press the start key.
2. Select the item to be displayed.

Display	Description
Ext temp	External temperature.
Ext rel hmd	Relative humidity of the external.
Ext abs hmd	Absolute humidity of the external.

* : Temperature and humidity are acquired and re-displayed periodically.

Completion
Press the stop key. The screen for selecting a maintenance item No. is displayed.

TONER
www.tonerplus.com.ua

U140	Adj Dev bias

Description
Displays various developer bias value.

Purpose
To check the developer bias value.

Method
1. Press the start key.
   * : Select the item to be displayed.

Display	Description	Setting range	Initial setting
Bias	Developer magnet roller bias.	240 to 340	290
Clock	Developer magnet roller frequency.	2600 to 3000	2700
Duty	Developer magnet roller duty.	0 to 100	45
Img Preference	Toner density setting of the copy.	-1 to 1	0

Completion
Press the stop key. The screen for selecting a maintenance item No. is displayed.

TONER
www.tonerplus.com.ua

U147	Set Toner Apply

Description
A mode setup of the operation which removes the toner in the development unit which carried out the charge rise is performed.

Purpose
The basic target does not need to change a setup.
However, the mode is changed when outputting a manuscript with an always low printing rate in large quantities.
* : If the toner which carried out the charge rise stagnates in a development unit, concentration will fall.

Method
1. Press the start key.
   * : Select the [Threshold].

Display	Description
Threshold	Changes the threshold of each setting.

Setting
1. Select the item to be set.
2. Change the setting value using the +/- keys or numeric keys.

Display	Description
Coverage Rate	Threshold of print coverage rate.
Page Cnt1	Threshold of page count. Part1. (Used for judgement in last page of print job)
Page Cnt2	Threshold of page count. Part2. (Used for judgement in page of continuous printing)

3. Press the start key. The value is set.

Completion
Press the stop key. The screen for selecting a maintenance item No. is displayed.

TONER
www.tonerplus.com.ua

U150	Chk Toner Sensor

Description
Displays the status of each sensor associated with the toner.

Purpose
To check if the sensors operate correctly.

Method
1. Press the start key.

Display	Description
Dev sensor	State of the developer sensor.

2. Check the status of sensor. The current value is displayed.
   * : Developer sensor are acquired and re-displayed periodically.

Completion
Press the stop key. The screen for selecting a maintenance item No. is displayed.

U156	Adj Tnr Ctrl Lv

Description
A toner supply level is adjusted.

Purpose
A toner supply level is adjusted.

Method
1. Press the start key.
2. Select the item to be adjust.
3. Change the value using the +/- or numeric keys.

Display	Description	Setting range	Initial setting
Supply(H)	The maximum threshold value of toner supply.	9 to 255	130
Supply(L)	The minimum threshold value of toner supply.	9 to 255	100
SUpply(PH)	The prohibition threshold value of toner supply.	to 255	150
On Time	Time to turn on a toner motor.	50 to 2000	500
Off Time	Time to turn off a toner motor.	50 to 2000	100

4. Press the start key. The value is set.

Completion
Press the stop key. The screen for selecting a maintenance item No. is displayed.

TONER
www.tonerplus.com.ua

U157	Dev Time

Description
Displays the developer drive time for checking a figure, which is used as a reference when correcting the toner control.

Purpose
To check the developer drive time after replacing the developer unit.

Method
1. Press the start key. The developer drive time is displayed.

Display	Description
K	Developer drive time. (K)

Completion
Press the stop key. The screen for selecting a maintenance item No. is displayed.

U158	Dev Cnt

Description
Displays the developing count for checking.

Purpose
To check the developing count after replacing the developing unit.

Method
1. Press the start key. The current developer counts is displayed.

Display	Description
K	Developing count. (K)
Clear	Value is cleared.

Clearing
1. Press [Clear].
2. Press the start key. The count is cleared.

Completion
Press the stop key. The screen for selecting a maintenance item No. is displayed.

TONER
www.tonerplus.com.ua

U161	Adj Fuser Temp

Description
Changes the fuser control temperature.

Purpose
Normally no change is necessary. However, can be used to prevent curling or creasing of paper, or solve a fuser problem on thick paper.

Method
1. Press the start key.
2. Select the item to be adjusted.
3. Change the setting value using the +/- keys.

Display	Description	Setting range	Initial setting
T1	Setting of target temperature of 1st stable temperature. (Ready)	120 to 220 (°C)	120
T2	Setting of target temperature of 2nd stable temperature. (Standby)	120 to 220 (°C)	160
T3	Setting of target temperature at a continuation copy. (1st copy)	120 to 220 (°C)	150
T4	Setting of target temperature at a continuation copy. (Final)	120 to 220 (°C)	160

4. Press the start key. The value is set.

Completion
Press the stop key. The screen for selecting a maintenance item No. is displayed.

TONER
www.tonerplus.com.ua

U167	Clr Fuser Cnt

Description
Displays and clears the fuser counts for checking.

Purpose
To check or clear the fuser counts after replacing the fuser unit.

Method
1. Press the start key. The fuser count is displayed.

Display	Description
Cnt	Fuser unit count value
Clear	A value is cleared.

Clearing
1. Press [Clear].
2. Press the start key. The count is cleared.

Completion
Press the stop key. The screen for selecting a maintenance item No. is displayed.

TONER
www.tonerplus.com.ua

U199	Fuser Temp

Description
Displays the detected fuser temperature.

Purpose
To check the fuser temperature.

Method
1. Press the start key. The fuser temperature is displayed.

Display	Description
Fix Edge	Temperature in the center of the fixing. (°C)
Fix Center	Temperature in the edge of the fixing. (°C)

* : Temperature a acquired and re-displayed periodically.

Completion
Press the stop key. The screen for selecting a maintenance mode No. is displayed.

U203	Chk DP Ope

Description
Simulates the original conveying operation separately in the DP.

Purpose
To check the DP operation.

Method
1. Press the start key.
2. Place an original in the DP.
3. Select the mode to be operated.

Display	Description
Mono	Mono reading
Color	Color reading

4. Select the item to be operated.

Display	Description
ADP	With paper, single-sided original.
RADP	With paper, double-sided original.

5. Press the start key. The operation starts.
6. To stop continuous operation, press the stop key.

Completion
Press the stop key. The screen for selecting a maintenance item No. is displayed.

TONER
www.tonerplus.com.ua

U204	Set Card/Counter

Description
Sets the presence or absence of the optional key counter.

Purpose
To run this maintenance item if a key counter is installed.

Method
1. Press the start key.
2. Select the item to be set.

Display	Description
Key-Counter	The key counter is installed.
Off	Not installed.

3. Press the start key. The setting is set.
4. Turn the main power switch off and on. Allow more than 5 seconds between Off and On.

Completion
Press the stop key. The screen for selecting a maintenance item No. is displayed.

U207	Chk Panel Key

Description
Checks operation of the operation panel keys.

Purpose
To check operation of all the keys and LEDs on the operation panel.

Method
1. Press the start key. The screen for executing is displayed.

Display	Description
Count	Keypress counter.

* : It counts up for every key press.
* : It does not count up except the key of the following order of depression.
* : Screen transition does not happen when screen transition key(Ex. Stop, Back key) is counted.

Completion
Press the stop key. The screen for selecting a maintenance item No. is displayed.

TONER
www.tonerplus.com.ua

U211	Set EH Connection

Description
Connection of enhancement apparatus is set up.

Purpose
It uses for a connection setup of enhancement apparatus without connection detection.

1. Press the start key.
2. Select [Duplex Unit].

Display	Description
Duplex Unit	A connection setup of a duplex unit.

3. Select On or Off.

Display	Description
On	Duplex unit is connect.
Off	Duplex unit is not connect.

4. Press the start key. The setting is set.
5. Turn the main power switch off and on. Allow more than 5 seconds between Off and On.

* : When you change the setting of the U211, U343 display changed.
if U211 is set "Off" , U343 is not shown on Select Screen.
* : When U211 is set "Off", U343 is set "Off".

TONER
www.tonerplus.com.ua

U243	Chk DP motors

Description
Turns the motors and clutches in the DP.

Purpose
To check the operation of the DP motors or clutches.

Method
1. Press the start key.
2. Select the item to be operated.
3. Press the start key. The operation starts.

Display	Description
Feed Motor	DP original feed motor (DPOFM) is turned.
Conv Motor	DP original conveying motor (DPOCM) is turned.
Rev Motor	DP switchback motor (DPSBM) is turned.
Regist Clutch	DP registration clutch (DPRCL) is turned.

4. To turn each motor off, press the stop key.

Completion
Press the stop key when operation stops. The screen for selecting a maintenance item No. is displayed.

TONER
www.tonerplus.com.ua

U244	Chk DP Switch

Description
Displays the status of the respective switches in the DP.

Purpose
To check if respective switches in the DP operate correctly.

Method
1. Press the start key.
2. Turn each switch or sensor on and off manually to check the status.

Display	Description
Switch	State of the switch

* : State of the switches are updated regularly.
* : State of the switches are represented by 0:OFF and 1:ON.
* : 7-digit numeric representation, each digit corresponds to the state of the switch.

7th digit	6th digit	5th digit	4th digit	3th digit	2th digit	1th digit
cover_ open	open	feed	regist	timing	set	longitudinal

Example: longitudinal switch is ON : 0000001
set switch is ON : 0000010
feed and timing switches are ON : 0010100

Completion
Press the stop key. The screen for selecting a maintenance item No. is displayed.

TONER
www.tonerplus.com.ua

U250	Mnt Cnt Pre-set

Description
Changes preset values for maintenance cycle.

Purpose
Provides changing the time when the message to acknowledge to conduct maintenance adjustment is periodically displayed.

Setting
1. Press the start key.
2. Select the item to be set.
3. Change the setting using the +- keys or numeric keys.

Display	Description	Setting range
M.Cnt A	Preset values for maintenance cycle. (kit A)	0 to 9999999
Clear	A value is cleared.	0

4. Press the start key. The value is set.

Clearing
1. Select [Clear].
2. Press the start key. The setting value is cleared.

Completion
Press the stop key. The screen for selecting a maintenance item No. is displayed.

TONER
www.tonerplus.com.ua

U251	Clr Mnt Cnt

Description
Displays and clears or changes the maintenance count.

Purpose
To verify the maintenance counter count.
Also to clear the count during maintenance service.

Setting
1. Press the start key.
2. Select the item to be changed.
3. Change the setting using the +/- keys or numeric keys.

Display	Description	Setting range
M.Cnt A	Count value for maintenance cycle A.	0 to 9999999
Clear	A value is cleared.	0

Clearing
1. Select [Clear].
2. Press the start key. The setting value is cleared.

Completion
Press the stop key. The screen for selecting a maintenance item No. is displayed.

TONER
www.tonerplus.com.ua

U252	Set Dest

Description
Switches the operations and screens of the machine according to the destination.

Purpose
To be executed after initializing the backup RAM, in order to return the setting to the value before replacement or initialization.

Method
1. Press the start key.
2. Select the destination.

Display	Description
Inch	Inch (North America) specifications.
Europe Metric	Metric (Europe) specifications.
Asia Pacific	Metric (Asia Pacific) specifications.
Australia	Australia specifications.
China	China specifications.
Korea	Korea specifications.

3. Press the start key.
4. Turn the main power switch off and on. Allow more than 5 seconds between Off and On.
   * : An error code is displayed in case of an initialization error.
   When errors occurred, turn main power switch off then on, and execute initialization using maintenance item U252.

Error codes

Codes	Description
0001	Controller
0020	Engine
0040	Scanner

TONER
www.tonerplus.com.ua

U253	Sel D/S count

Description
Switches the count system for the total counter and other counters.

Purpose
Used to select, according to the preference of the user (copy service provider),
if folio size paper is to be counted as one sheet (single count) or two sheets (double count).

Setting
1. Press the start key.
2. Select the item to be set.

Display	Description
SGL(All)	Single count for all size paper.
DBL(A3/Ledger)	Double count for A3/Ledger size or larger.
DBL(B4)	Double count for B4 size or larger.
DBL(Folio)	Double count for Folio size or larger.

* : Initial setting: DBL(A3/Ledger)

3. Press the start key. The setting is set.

Completion
Press the stop key. The screen for selecting a maintenance item No. is displayed.

U260	Set Count Mode

Description
Changes the copy count timing for the total counter and other counters.

Purpose
To be set according to user request.

Setting
1. Press the start key.
2. Select the copy count timing.

Display	Description
Feed	When secondary paper feed starts.
Eject	When the paper is ejected

3. Initial setting: Eject
4. Press the start key. The setting is set.

Completion
Press the stop key. The screen for selecting a maintenance item No. is displayed.

TONER
www.tonerplus.com.ua

U265	Set Model Dest

Description
Sets the OEM purchaser code.

Purpose
Sets the code when replacing the main board and the like.

Setting
1. Press the start key.
2. Change the setting using the +- keys or numeric keys.

Display	Description
No.	Sets the OEM purchaser code.

3. Press the start key. The setting is set.
4. Turn the main power switch off and on. Allow more than 5 seconds between Off and On.

Completion
Press the stop key. The screen for selecting a maintenance item No. is displayed.

U285	Set Svc Sts Page

Description
Determines displaying the digital dot coverage report on reporting.

Purpose
According to user request, changes the setting.

Setting
1. Press the start key.
2. Select [On] or [Off].

Display	Description
On	Displays the digital dot coverage.
Off	Not to display the digital dot coverage.

* : Initial setting: On

3. Press the start key. The setting is set.

Completion
Press the stop key. The screen for selecting a maintenance item No. is displayed.

TONER
www.tonerplus.com.ua

U326	Set clean Bk Line

Description
Sets whether to display the cleaning guidance when detecting the black line.

Purpose
Displays the cleaning guidance in order to make the call for service with the black line decrease by the rubbish on the contact glass when scanning from the DP.

Method
1. Press the start key.
   * : Select the item to set.

Display	Description
Black Line Mode	Black line cleaning guidance ON/OFF setting
Black Line Cnt	Setting counts of the cleaning guidance indication

Setting: [Black Line Mode]
1. Select On or Off.

Display	Description
On	Displays the cleaning guidance
Off	Not to display the cleaning guidance

   * : Initial setting: On
2. Press the start key. The setting is set.

Setting: [Black Line Cnt]
1. Select [Cnt].
2. Change the setting value using the +/- keys or numeric keys.

Display	Description	Setting range	Initial setting
Cnt	Setting counts of the cleaning guidance indication (x 1000 sheets)	0 to 255	8

1. When setting is 0, the black line cleaning indication is displayed only if the black line is detected.
2. Press the start key. The value is set.

Completion
Press the stop key. The screen for selecting a maintenance item No. is displayed.

TONER
www.tonerplus.com.ua

U332	Adj Calc Rate

Description

Sets the coefficient of nonstandard sizes in relation to the A4/Letter size. The coefficient set here is used to convert the black ratio in relation to the A4/Letter size and to display the result in user simulation.

Purpose

To set the coefficient for converting the black ratio for nonstandard sizes in relation to the A4/Letter size.

Setting

1. Press the start key.
2. Change the setting using the +/-keys or numeric keys.

Display	Description	Setting range	Initial setting
Rate	Size parameter.	1 to 30	10

* : Initial setting: 10 (A4/Letter)

3. Press the start key. The value is set.

Completion

Press the stop key. The screen for selecting a maintenance item No. is displayed.

TONER
www.tonerplus.com.ua

U341	Set Prn Cass

Description
Sets a paper feed location specified for printer output.

Purpose
To use a paper feed location only for printer output.
A paper feed location specified for printer output cannot be used for copy output.

1. Press the start key.
2. Select the paper feed location for the printer.
   Two or more cassette can be selected.

Display	Description
Cas1	Cassette 1
Cas2	Cassette 2 (optional paper feeder)
Cas3	Cassette 3 (optional paper feeder)
Cas4	Cassette 4 (optional paper feeder)

   * : When an optional paper feed device is not installed, the corresponding count is not displayed.
3. Press the start key. The setting is set.

Completion
Press the stop key. The screen for selecting a maintenance item No. is displayed.

U343	Set Dup PriMode

Description
Switches the initial setting between duplex and simplex copy.

Purpose
To be set according to frequency of use: set to the more frequently used mode.

Setting
1. Press the start key.
2. Select On or Off.

Display	Description
On	Duplex copy.
Off	Simplex copy.

   * : Initial setting: Off
3. Press the start key. The setting is set.

Completion
Press the stop key. The screen for selecting a maintenance item No. is displayed.

TONER
www.tonerplus.com.ua

U345	Set Mnt Time Disp

Description

Sets when to display a message notifying that the time for maintenance is about to be reached,by setting the number of copies that can be made before the current maintenance cycle ends.
When the difference between the number of copies of the maintenance cycle and that of the maintenance count reaches the set value, the message is displayed.

Purpose

To change the time for maintenance due indication.

Setting

1. Press the start key.
2. Select the item to be changed.
3. Change the setting using the +/- keys or numeric keys.

Display	Description	Setting range	Initial setting
Cnt	Time for maintenance due indication (Remaining number of copies that can be made before the current maintenance cycle ends)	0 to 9999	0
Clear	A value is cleared.	-	-

4. Press the start key. The value is set.

Clearing

1. Select [Clear].
2. Press the start key. The setting value is cleared.

Completion

Press the stop key. The screen for selecting a maintenance item No. is displayed.

TONER
www.tonerplus.com.ua

U346	Slct Sleep mode

Description
A sleep mode-related setting change is performed.

Purpose
It uses in order to perform a sleep mode-related setting change.

Method
1. Press the start key.
2. Select On or Off.

Display	Description
On	Enable Auto Sleep functionality.
Off	Disable Auto Sleep functionality.

* : Initial setting: On

3. Press the start key. The setting is set.

Completion
Press the stop key. The screen for selecting a maintenance item No. is displayed.

TONER
www.tonerplus.com.ua

U402	Adjust margin

Description
Adjusts margins for image printing.

Purpose
Make the adjustment if margins are incorrect.

Adjustment
1. Press the start key.
2. Press the system menu key.
3. Press the start key to output a test pattern.
4. Press the system menu key.
5. Select the item to be adjusted.

Display	Description	Setting range	Initial setting	Change in value per step
Lead	Printer leading edge margin.	0 to 100	40	0.1
A Margin	Printer left margin.	0 to 100	40	0.1
C Margin	Printer right margin.	0 to 100	40	0.1
Trail	Printer trailing edge margin.	0 to 100	40	0.1

6. Change the setting value using the +/- keys or numeric keys.
   Increasing the value makes the margin wider, and decreasing it makes the margin narrower.

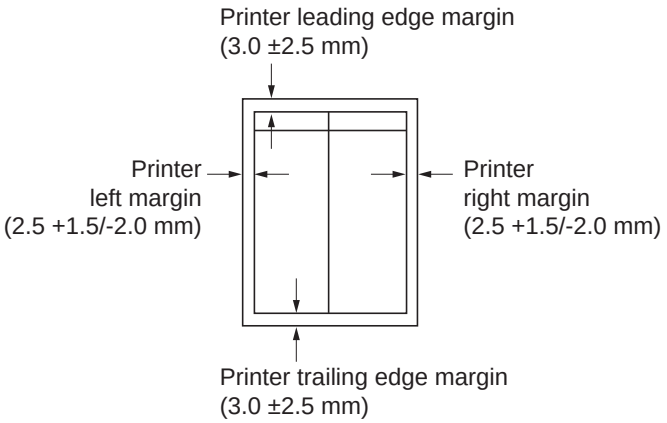

Figure 1-3-14

7. Press the start key. The value is set.

Caution
If the above adjustment does not optimize the margins, perform the following maintenance modes.

U034-------- U402

(P.1-3-22)

Completion
Press the stop key. The screen for selecting a maintenance item No. is displayed.

TONER
www.tonerplus.com.ua

U403	Scan Margin Tbl

Description
Adjusts margins for scanning the original on the contact glass.

Purpose
Make the adjustment if margins are incorrect.

Adjustment
1. Press the start key.
2. Press the system menu key.
3. Place an original and press the start key to make a test copy.
4. Press the system menu key.
5. Select the item to be adjusted.

Display	Description	Setting range	Initial setting	Change in value per step
A Margin	Scanner left margin.	0 to 100	20	1
B Margin	Scanner leading edge margin.	0 to 100	20	1
C Margin	Scanner right margin.	0 to 100	20	1
D Margin	Scanner trailing edge margin.	0 to 100	02	1

6. Change the setting value using the +/- keys or numeric keys.
   Increasing the value makes the margin wider, and decreasing it makes the margin narrower.

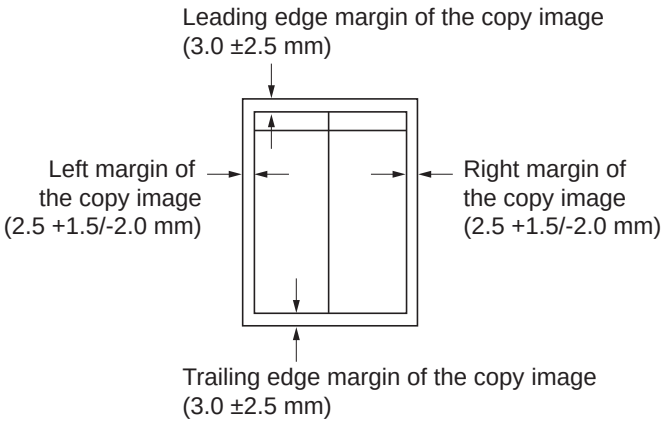

Figure 1-3-15

7. Press the start key. The value is set.

Caution
If the above adjustment does not optimize the margins, perform the following maintenance modes.

U034 -------- U402 -------- U403

(P.1-3-22) (P.1-3-70)

Completion
Press the stop key. The indication for selecting a maintenance item No. appears.

TONER
www.tonerplus.com.ua

U404	Scan margin DP

Description
Adjusts margins for scanning the original from the DP.

Purpose
Make the adjustment if margins are incorrect.

Adjustment
1. Press the start key.
2. Press the system menu key.
3. Place an original on the DP and press the start key to make a test copy.
4. Press the system menu key.
5. Select the item to be adjusted.

Display	Description	Setting range	Initial setting	Change in value per step
A Margin	DP left margin	0 to 100	30	1
B Margin	DP leading edge margin	0 to 100	25	1
C Margin	DP right margin	0 to 100	30	1
D Margin	DP trailing edge margin	0 to 100	40	1

6. Change the setting value using the cursor left/right keys or numeric keys.
   Increasing the value makes the margin wider, and decreasing it makes the margin narrower.

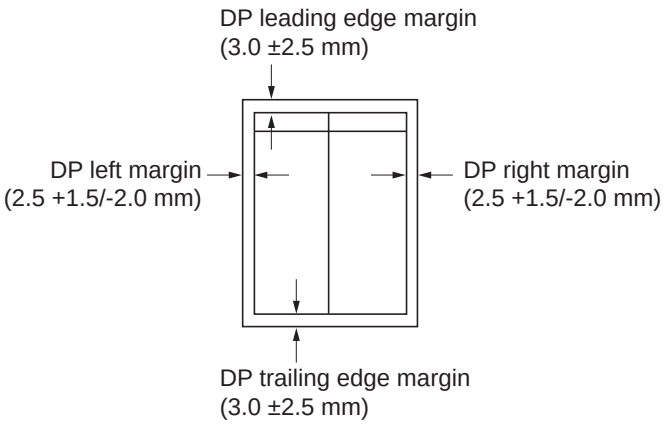

Figure 1-3-16

7. Press the start key. The value is set.

Caution
If the above adjustment does not optimize the margins, perform the following maintenance modes.

U034 -------- U402 -------- U403 -------- U404
(P.1-3-22) (P.1-3-70) (P.1-3-71)

Completion
Press the stop key. The screen for selecting a maintenance item No. is displayed.

TONER
www.tonerplus.com.ua

U411	Scanner Auto Adjustment

Description

Uses a specified original and automatically adjusts the following items in the scanner and the DP scanning sections.
Scanner section: Original size magnification, leading edge timing, center line, input gamma, input gamma in monochrome mode and matrix.
DP scanning section: Original size magnification, leading edge timing, center line.

Purpose

To perform automatic adjustment of various items in the scanner and the DP scanning sections.

Method

1. Press the start key.
2. Select the item. The screen for executing is displayed.

Display	Description	Original to be used for adjustment (P/N)
Table	Automatic adjustment in the scanner section.	302K357010
DP	Automatic adjustment in the DP scanning section.	303M457010
All	Performs automatic adjustment in the DP scanning section following automatic adjustment in the scanner section.	-

Method: [Table]

1. Enter the value for [Adjust Original] using maintenance item U425.
2. Set a specified original (P/N: 302K357010) on the platen.
3. Enter maintenance item U411.
4. Select [Target] and press the start key..
5. Select [Table].
6. Press the start key. Auto adjustment starts.
   * : When automatic adjustment has normally completed, [OK] is displayed. If a problem occurs during auto adjustment, error code is displayed and operation stops. Should this happen, determine the details of the problem and repeat the procedure from the beginning.

Method: [DP]

1. Enter the value for [Adjust Original] using maintenance item U425.
2. Set a specified original (P/N: 303M457010) on the DP face up.
3. Enter maintenance item U411.
4. Select [Target] and press the start key..
5. Select [DP].
6. Press the start key. Auto adjustment starts.
   * : When automatic adjustment has normally completed, [OK] is displayed. If a problem occurs during auto adjustment, error code is displayed and operation stops. Should this happen, determine the details of the problem and repeat the procedure from the beginning.

TONER
www.tonerplus.com.ua

Method: [All]

1. Load A4/letter paper.
2. Press the start key to output the original for adjustment.
3. Set the output the original for adjustment and press the start key.
4. Set the output the original for adjustment on the DP face up.
5. Press the start key to scan documents.
6. Press the start key. Auto adjustment of first side starts.
7. Set the output the original for adjustment on the DP face down.
8. Press the start key to scan documents.
9. Press the start key. Auto adjustment of second side starts.

   * : When automatic adjustment has normally completed, [OK] is displayed. If a problem occurs during auto adjustment, error code is displayed and operation stops. Should this happen, determine the details of the problem and repeat the procedure from the beginning.

Error Codes

Codes	Description
01	Automatic adjustment success
03	Black band detection error (scanner leading edge registration)
03	Black band detection error (scanner main scanning direction magnification)
04	Black band is not detected (scanner leading edge registration)
05	Black band is not detected (scanner center line)
06	Black band is not detected (scanner main scanning direction magnification)
07	Black band is not detected (scanner auxiliary scanning direction magnification)
08	Black band is not detected (DP main scanning direction magnification far end)
09	Black band is not detected (DP main scanning direction magnification near end)
0a	Black band is not detected (DP auxiliary scanning direction magnification leading edge)
0b	Black band is not detected (DP auxiliary scanning direction magnification leading edge original check)
0c	Black band is not detected (DP auxiliary scanning direction trailing edge)
0d	White band is not detected (DP auxiliary scanning direction trailing edge 2)
0e	DMA time out
0f	Auxiliary scanning direction magnification error
10	Auxiliary scanning direction leading edge detection error
11	Auxiliary scanning direction trailing edge detection error
12	Auxiliary scanning direction skew 1.5 error
13	Maintenance request error
14	Main scanning direction center line error
15	Main scanning direction skew 1.5 error

TONER www.tonerplus.co.ua

Codes	Description
16	Main scanning direction magnification error
17	Service call error
18	DP paper misfeed error

Completion

Press the stop key. The screen for selecting a maintenance item No. is displayed.

TONER
www.tonerplus.com.ua

U425	Set Target

Description
Enters the lab values that is indicated on the back of the chart (P/N: 302K357010) used for adjustment.

Purpose
Performs data input in order to correct for differences in originals during automatic adjustment.

Method
1. Press the start key.
2. Select the item to be set.

Display	Description
White	Setting the white patch for the original for adjustment
Black	Setting the black patch for the original for adjustment
Gray1	Setting the Gray1 patch for the original for adjustment
Gray2	Setting the Gray2 patch for the original for adjustment
Gray3	Setting the Gray3 patch for the original for adjustment
C	Setting the cyan patch for the original for adjustment
M	Setting the magenta patch for the original for adjustment
Y	Setting the yellow patch for the original for adjustment
R	Setting the red patch for the original for adjustment
G	Setting the green patch for the original for adjustment
B	Setting the blue patch for the original for adjustment
Adjust Original	Setting the main and auxiliary scanning directions
Adjust OriginalDP	Setting each value of DP detection position.

3. Select the item to be set.

Display	Description	Setting range
L	Setting the L value	0.0 to 100.0
a	Setting the a value	-200.0 to 200.0
b	Setting the b value	-200.0 to 200.0

4. Enters the value that is indicated on the face of the chart using the +/- keys or numeric keys.
5. Press the start key. The value is set.

TONER
www.tonerplus.com.ua

Setting: [Adjust Original]

1. Measure the distance from the leading edge to the top of black belt 1 of the original at A, B and C.
   Measurement procedure
   1) Measure the distance from the leading edge to the top of black belt 1 of the original at A (30 mm from the left edge), B (148.5 mm from the left edge) and C (267 mm from the left edge), respectively.
   2) Apply the following formula for the values obtained: ((A + B + C) / 3)
2. Enter the values solved using the cursor left/right keys or numeric keys in [Dist1].
3. Press the start key. The value is set.
4. Measure the distance from the left edge to the right edge black belt 2 of the original at F.
   Measurement procedure
   1) Measure the distance from the left edge to the right edge black belt 2 of the original at F (15 mm from the top edge of black belt 1).
5. Enter the values using the cursor left/right keys or numeric keys in [Dist2].
6. Press the start key. The value is set.
7. Measure the distance from the top edge of black belt 1 to the bottom of black belt 3 of the original at D and E.
   1) Measure the distance from the top edge of black belt 1 to the bottom of black belt 3 of the original at D (30 mm from the left edge) and E (267 mm from the left edge), respectively.
   2) Apply the following formula for the values obtained: (D/2 + E/2)
8. Enter the measured value using the cursor left/right keys or numeric keys in [Dist3].
9. Press the start key. The value is set.

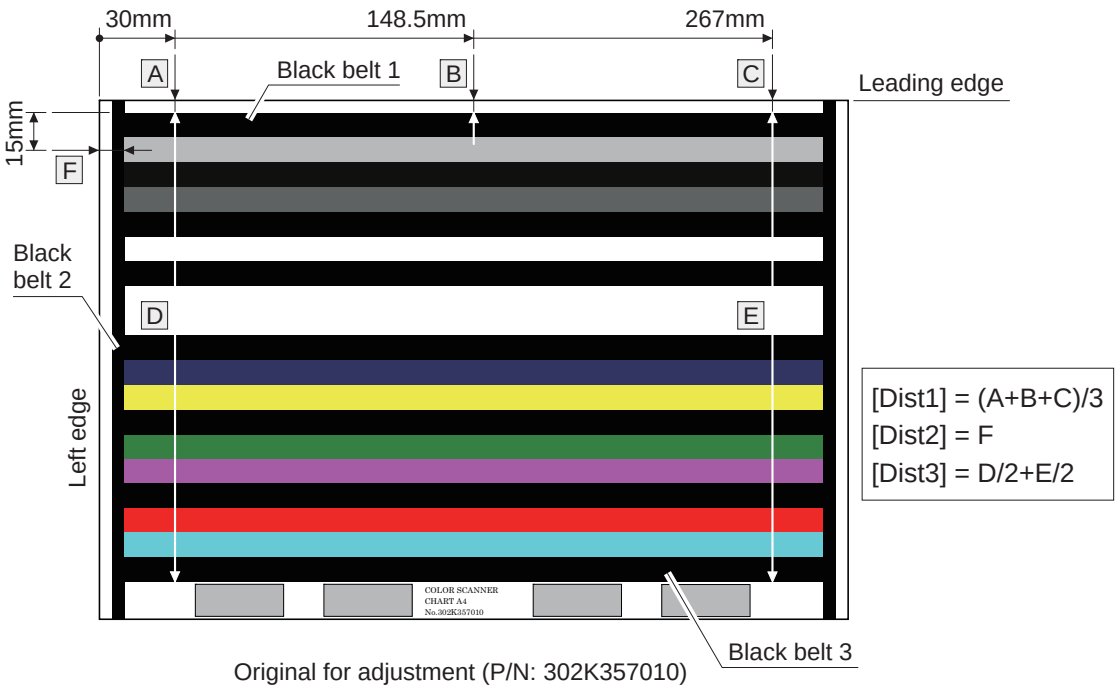

Figure 1-3-17

TONER
www.tonerplus.com.ua

Setting: [Adjust OriginalDP]

1. Measure the distance from the leading edge to the black belt (inside) of the original at A.
2. Enter the measured value using the +/- keys or numeric keys in [Lead].
3. Measure the distance from the left edge to the black belt (inside) of the original at B.
4. Enter the measured value using the +/- keys or numeric keys in [Main Scan].
5. Measure the distance from the black belt of leading edge (inside) to the black belt of trailing edge (inside) of the original at C.
6. Enter the measured value using the +/- keys or numeric keys in [Sub Scan].
7. Press the start key. The value is set.

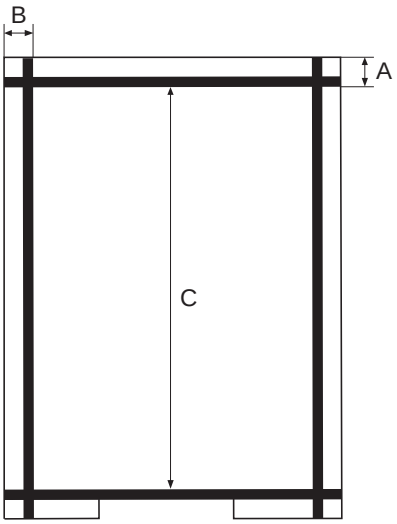

Original for adjustment (P/N: 303M457010)

Figure 1-3-18

Completion

Press the stop key. The screen for selecting a maintenance item No. is displayed.

TONER
www.tonerplus.com.ua

U901	Clr Paper FD Cnt

Description
Displays or clears copy counts by paper feed locations.

Purpose
To check the time to replace consumable parts. Also to clear the counts after replacing the consumable parts.

Method
1. Press the start key. The counts by paper feed locations are displayed.

Display	Description
MPT	MP tray
Cas1	Cassette 1
Cas2	Cassette 2 (paper feeder)
Cas3	Cassette 3 (paper feeder)
Cas4	Cassette 4 (paper feeder)
Duplex	Duplex unit
Clear	Value is cleared.

* : When an optional paper feed unit is not installed, the corresponding count is not displayed.

Clearing
1. Select the counts to be cleared.
   [Cassette2], [Cassette3] and [Cassette4] cannot be cleared.
2. Select the counts for all and press [Clear].
3. Press the start key. The counts is cleared.

Completion
Press the stop key. The screen for selecting a maintenance item No. is displayed.

TONER
www.tonerplus.com.ua

U903	Clr paper JAM Cnt

Description
Displays or clears the jam counts by jam locations.

Purpose
To check the paper jam status. Also to clear the jam counts after replacing consumable parts.

Method
1. Press the start key.
2. Select the item.

Display	Description
Cnt	Displays/clears the jam counts
Total Cnt	Displays the total jam counts

Method: [Cnt]
1. Select [Cnt]. The count of jam code by type is displayed.
   Codes for which the count value is 0 are not displayed.
2. Change the screen using the cursor up/down keys.
3. Select the count value for jam code and press [Clear].
   The individual counter cannot be cleared.
4. Press the start key. The counter value is cleared.

Method: [Total Cnt]
1. Select [Total Cnt]. The total number of jam code by type is displayed.
2. Change the screen using the cursor up/down keys.
   The total number of jam count cannot be cleared.

How to display the history of paper jams
[Function]
To check the variation in the occurrences of paper jams as a consequence of firmware upgrade.

[Procedure]
1. Retrives versions of system and engine software at the timing of clearing.
2. Displays comparison of the occurrences of paper jams before and after firmware upgrades.
3. Displays the date of clearing.

[Method]
At firmware upgrade
1. Perform clearance of the counter following the above before performing firmware upgrade.
2. Clearing the counter records the date of clearing.
3. Perform firmware upgrade.

At performing service
Print a maintenance report using mode U000 and check the variance of occurrence of paper jams after firmware upgrade was done.

TONER
www.tonerplus.com.ua

Detail of history of paper jams

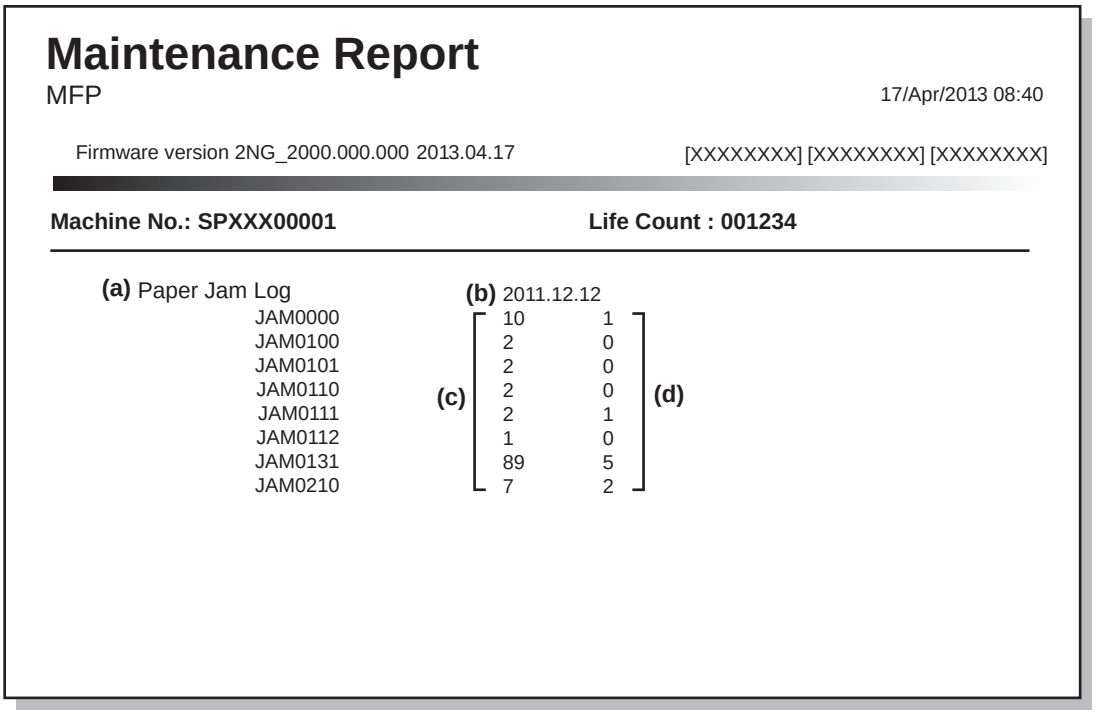

Figure 1-3-19

No.	Description
a	Paper jam numbers
b	Date of clearing counter records
c	Total number of paper jams
d	Occurrences of paper jams after clearing the paper jam counts

Method: [Total Cnt]

1. Select [Total Cnt]. The total number of jam code by type is displayed.
2. Change the screen using the cursor up/down keys.
   The total number of jam count cannot be cleared.

Completion

Press the stop key. The screen for selecting a maintenance item No. is displayed.

TONER
www.tonerplus.com.ua

U904	Clr Svc call cnt

Description
Displays or clears the service call code counts by types.

Purpose
To check the service call code status by types.
Also to clear the service call code counts after replacing consumable parts.

Method
1. Press the start key.
2. Select the item.

Display	Description
Cnt	Displays/clears the call for service counts
Total Cnt	Displays the total call for service counts

Method: [Cnt]
1. Select [Cnt]. The count for service call detection by type is displayed.
   Codes for which the count value is 0 are not displayed.
2. Change the screen using the cursor up/down keys.
3. Select the count value for service call code and press [Clear].
   The individual counter cannot be cleared.
4. Press the start key. The counter value is cleared.

Method: [Total Cnt]
1. Select [Total Cnt]. The total number of service call counts by type is displayed.
2. Change the screen using the cursor up/down keys.
   The total number of service call count cannot be cleared.

How to display the history of service counts
[Function]
To check the variation in the occurrences of service calls as a consequence of firmware upgrade.

[Procedure]
1. Retrives versions of system and engine software at the timing of clearing.
2. Displays comparison of the occurrences of service calls before and after firmware upgrades.
3. Displays the date of clearing.

[Method]
At firmware upgrade
1. Perform clearance of the counter following the above before performing firmware upgrade.
2. Clearing the counter records the date of clearing.
3. Perform firmware upgrade.

At performing service
1. Print a maintenance report using mode U000 and check the variance of occurrence of service calls after firmware upgrade was done.

TONER
www.tonerplus.com.ua

Detail of history of service counts

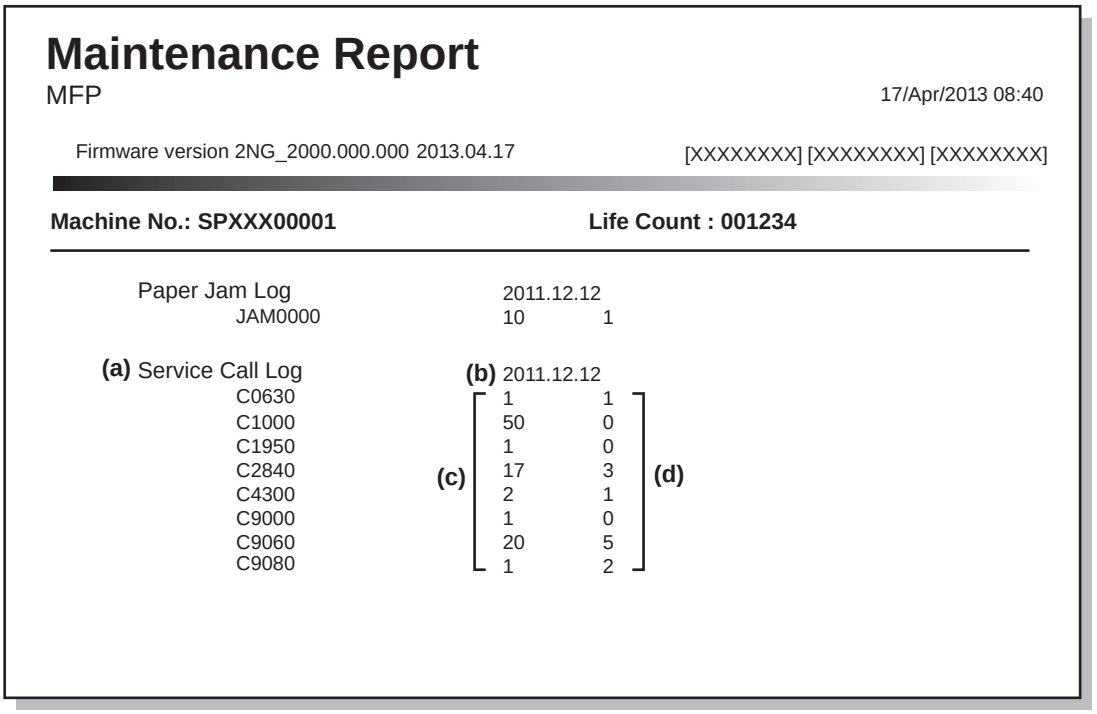

Figure 1-3-20

No.	Description
(a)	Service call numbers
(b)	Date of clearing counter records
(c)	Total number of service calls
(d)	Occurrences of paper jams after clearing the paper jam counts

Method: [Total Cnt]

1. Select [Total Cnt]. The total number of service call counts by type is displayed.
2. Change the screen using the cursor up/down keys.
   The total number of service call count cannot be cleared.

Completion

Press the stop key. The screen for selecting a maintenance item No. is displayed.

TONER
www.tonerplus.com.ua

U905	Option Cnt

Description
Displays the counts of DP.

Purpose
To check the use of DP.

Method
1. Press the start key.
2. Select [DP]. The count is displayed.

Display	Description
DP	Counts of DP

Method: [DP]

Display	Description
ADP	Counts of single-sided originals that has passed through the DP.
RADP	Counts of double-sided originals that has passed through the DP.

Completion
Press the stop key. The screen for selecting a maintenance item No. is displayed.

U906	Reset Dis Func

Description
Resets the service call code for partial operation control.

Purpose
To be reset after partial operation is performed due to problems in the casettes or other sections, and the related parts are serviced.

Method
1. Press the start key.
2. Press [Execute].

Display	Description
Execute	Resets the service call code for partial operation control.

3. Press the start key to reset partial operation control.
4. Turn the main power switch off and on. Allow more than 5 seconds between Off and On.

Completion
Press the stop key. The screen for selecting a maintenance item No. is displayed.

TONER
www.tonerplus.com.ua

U910	Clr Coverage Dat

Description
Clears the accumulated data for the print coverage per A4 size paper and its period of time (as shown on the service status report).

Purpose
To clear data as required at times such as during maintenance service.

Method
1. Press the start key.
2. Select [Execute].

Display	Description
Execute	The print coverage data is cleared.

3. Press the start key. The print coverage data is cleared.

Completion
Press the stop key. The screen for selecting a maintenance item No. is displayed.

U927	Clr Chg/Life Cnt

Description
Resets all of the counts back to zero.

Purpose
The total account counter and the machine life counter can be cleared only once if all count values are 1000 or less.

Method
1. Press the start key.
2. Select [Execute].

Display	Description
Execute	All copy counts and machine life counts are cleared.

3. Press the start key. All copy counts and machine life counts are cleared.

Completion
Press the stop key. The screen for selecting a maintenance item No. is displayed.

TONER
www.tonerplus.com.ua

U928	Life Cnt

Description
Displays the machine life counts.

Purpose
To check the machine life counts.

Method
1. Press the start key. The current machine life counts is displayed.

Display	Description
Cnt	Machine life counts

Completion
Press the stop key. The screen for selecting a maintenance item No. is displayed.

U935	Mnt Relay Board

Description
Sets the mode when call for service (C0060) occurs.

Purpose
Sets the machine status temporarily when call for service (C0060) occurs. However, after the setting, call for service (C0060) occurs again when progress of period.

Setting
1. Press the start key.
2. Select [Mode].
3. Change the setting value using the +/- keys or numeric keys.

Display	Description
Mode	Relay board exchange mode.
Cnt	The number of times of changing into the mode 1.

4. Press the start key. The setting is set.
5. Turn the main power switch off and on. Allow more than 5 seconds between Off and On.

Supplement
After removing the cause of the problem, be sure to change the setting in OFF.

Completion
Press the stop key. The screen for selecting a maintenance item No. is displayed.

TONER
www.tonerplus.com.ua

U942	Adj DPLloop Amt

Description
Adjusts the deflection generated when the document processor is used.

Purpose
Use this mode if an original non-feed jam, oblique feed or wrinkling of original occurs when the document processor is used.

Setting
1. Press the start key.
2. Press the system menu key.
3. Place an original on the DP and press the start key to make a test copy.
4. Press the system menu key.
5. Select the item to be adjusted.
6. Change the setting value using the +/- keys or numeric keys.

Display	Description	Setting range	Initial setting	Change in value per step
Front	Deflection of single-sided original	-30 to 30	0	1
Back	Deflection of double-sided original	-60 to 60	0	1

* : The greater the value, the larger the deflection; the smaller the value, the smaller the deflection.
If an original non-feed jam or oblique feed occurs, increase the setting value. If wrinkling of original occurs, decrease the value.

7. Press the start key. The value is set.

Completion
Press the stop key. The screen for selecting a maintenance item No. is displayed.

U969	Toner Area Code

Description
Displays the toner area code.

Purpose
To check the toner area code.

Method
1. Press the start key. The toner area code is displayed.

Display	Description
Code	Toner area code.

Completion
Press the stop/clear key. The screen for selecting a maintenance item No. is displayed.

TONER
www.tonerplus.com.ua

This page is intentionally left blank.

www.tonerplus.com.ua

1-4-1 Paper misfeed detection

(1) Paper misfeed indication

When a paper misfeed occurs, the machine immediately stops printing and displays the paper misfeed message on the operation panel. To remove paper misfed in the machine, pull out the cassette, open the paper conveying unit or paper conveying cover.
The positions are displayed on the operation panel when a paper jam has occurred.

Paper jam.(Casstte 1) Jxxxx

Jam code: Jam code suggesting the cause of jam

Jam lacation indicators

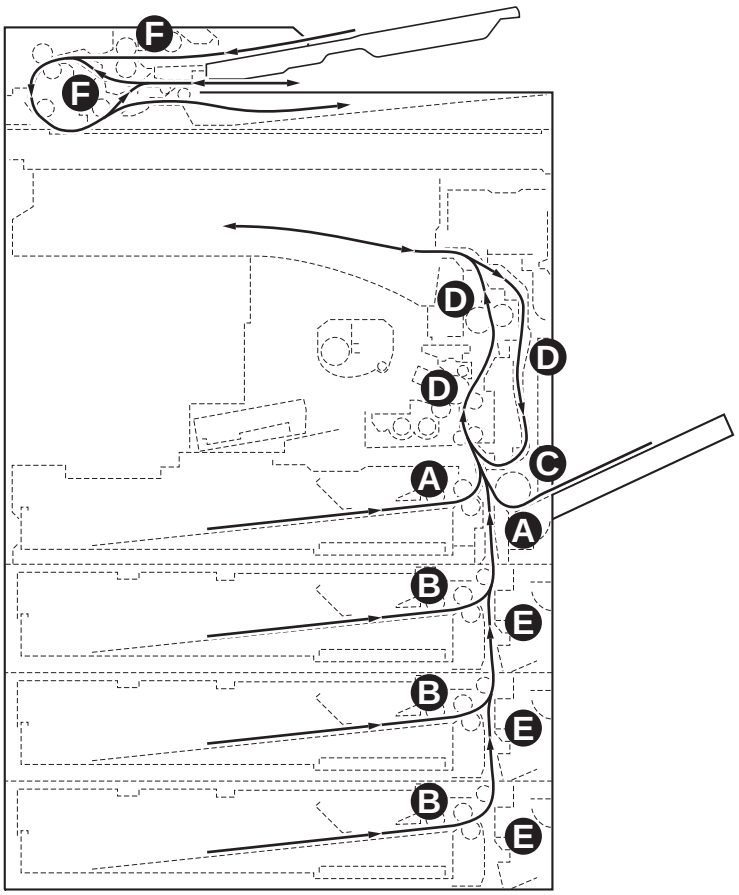

Figure 1-4-1

A. Misfeed in cassette 1
B. Misfeed in cassette 2 to 4 (Option)
C. Misfeed in the MP tray
D. Misfeed inside the right cover 1
E. Misfeed inside the right cover 2 to 4 (Option)
F. Misfeed in the document processor (Option)

TONER
www.tonerplus.com.ua

(2) Paper misfeed detection condition

Main unit + DP (Option) + PF (Option)

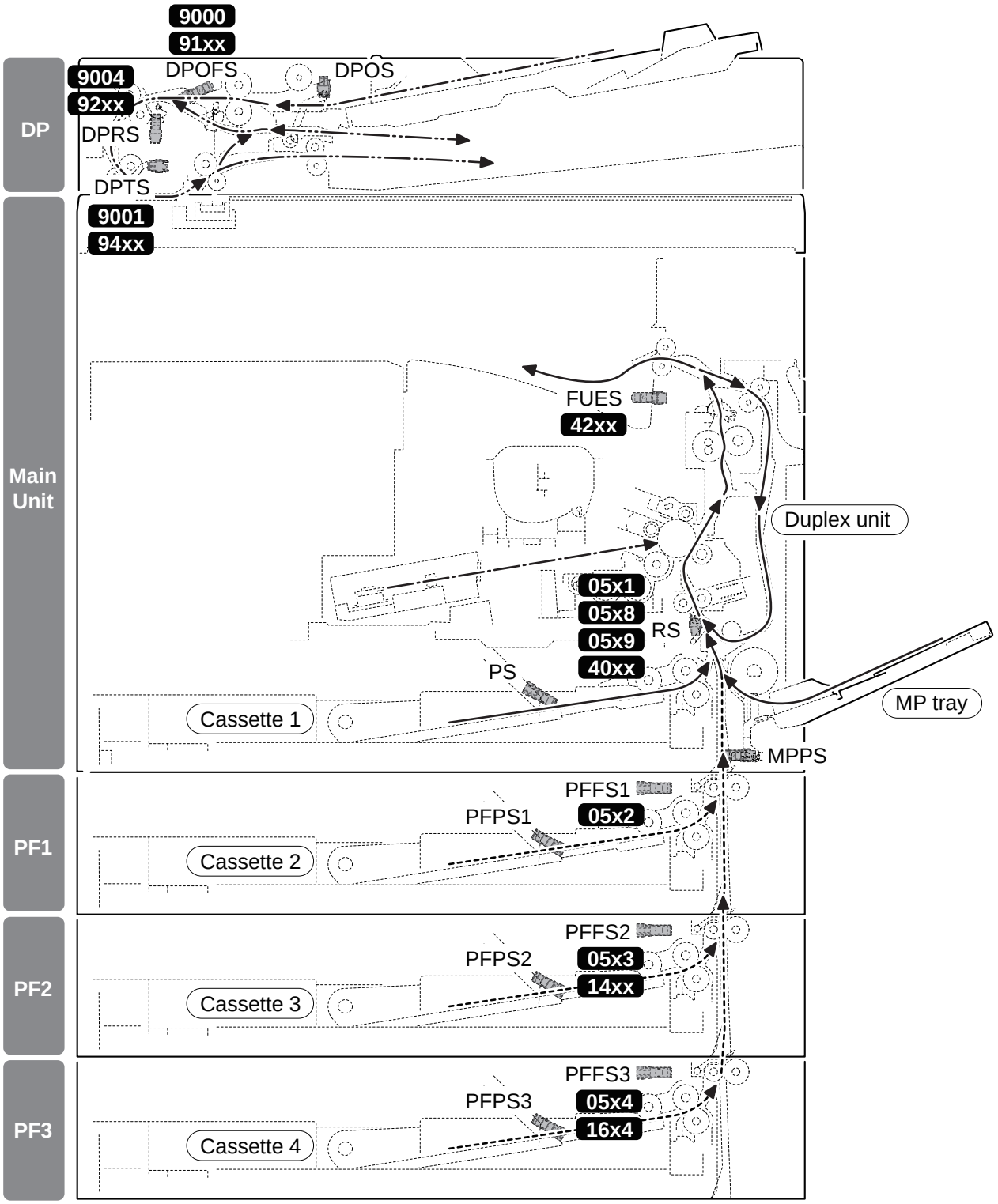

Figure 1-4-2

TONER
www.tonerplus.com.ua

List of JAM Code

Code	Contents	Conditions	Jam location*
0000	Initial jam	The power is turned on when a sensor in the conveying system is on.	-
0100	Secondary feeding timeout	Secondary paper feed request given by the controller is unreachable.	-
0101	Wait for ready of print-process package	Process package won't become ready.	-
0104	Wait for ready of conveying package	Conveying package won't become ready.	-
0105	Driving prevention	A drive does not stop.	-
0107	Wait for ready of fuser package	Fuser package won't become ready.	-
0110	Right cover open	The right cover is opened during printing.	-
0111	Front cover open	The front cover is opened during printing.	-
0120	Duplex feeding signal mismatch	Paper feed request was received from the duplex section despite the absence of paper in the duplex section.	-
0121	Duplex cycle overfilow	The controller issued the duplex section a request for more pages than the duplex print cycle contains.	-
0211	Casette 1 cover open	The PF right cover 1 is opened during printing.	-
0212	Casette 2 cover open	The PF right cover 2 is opened during printing.	-
0213	Casette 3 cover open	The PF right cover 3 is opened during printing.	-
0501	Casette 1 no paper	Registration sensor (RS) does not turn on during paper feed from cassette 1.	A
0502	Casette 2 no paper	PF feed sensor 1 (PFFS1) does not turn on during paper feed from cassette 2 (paper feeder).	B
0503	Casette 3 no paper	PF feed sensor 2 (PFFS2) does not turn on during paper feed from cassette 3 (paper feeder).	B
0504	Casette 4 no paper	PF feed sensor 3 (PFFS3) does not turn on during paper feed from cassette 4 (paper feeder).	B
0508	Duplex unit no paper	Registration sensor (RS) does not turn on during paper feed from duplex section.	D
0509	MPF no paper	Registration sensor (RS) does not turn on during paper feed from MP tray.	C
0511	Casette 1 paper overtaking	Registration sensor (RS) does not turn off during paper feed from cassette 1.	D
0512	Casette 2 paper overtaking	PF feed sensor 1 (PFFS1) does not turn off during paper feed from cassette 2 (paper feeder).	A
0513	Casette 3 paper overtaking	PF feed sensor 2 (PFFS2) does not turn off during paper feed from cassette 3 (paper feeder).	B

*: Refer to figure 1-4-1 for paper misfeed indication (see page 1-4-1).

TONER
www.tonerplus.com.ua

Code	Contents	Conditions	Jam location*
0514	Casette 4 paper overtaking	PF feed sensor 3 (PFFS3) does not turn off during paper feed from cassette 4 (paper feeder).	B
0518	Duplex unit paper overtaking	Registration sensor (RS) does not turn off during paper feed from duplex section.	D
0519	MPF paper overtaking	Registration sensor (RS) does not turn off during paper feed from MP tray.	D
1403	PF feed sensor 2 come short (Cassette 3 feeding)	PF feed sensor 2 (PFFS2) does not turn on during paper feed from cassette 3 (paper feeder).	B
1404	PF feed sensor 2 come short (Cassette 4 feeding)	PF feed sensor 2 (PFFS2) does not turn on during paper feed from cassette 4 (paper feeder).	E
1413	PF feed sensor 2 retention (Cassette 3 feeding)	PF feed sensor 2 (PFFS2) does not turn off during paper feed from cassette 3 (paper feeder).	E
1414	PF feed sensor 2 retention (Cassette 4 feeding)	PF feed sensor 2 (PFFS2) does not turn off during paper feed from cassette 4 (paper feeder).	E
1604	PF feed sensor 3 come short (Cassette 4 feeding)	PF feed sensor 3 (PFFS3) does not turn on during paper feed from cassette 4 (paper feeder).	B
1614	PF feed sensor 3 retention (Cassette 4 feeding)	PF feed sensor 3 (PFFS3) does not turn off during paper feed from cassette 4 (paper feeder).	E
4002	Registration sensor come short (Cassette 2 feeding)	Registration sensor (RS) does not turn on during paper feed from cassette 2 (paper feeder).	E
4003	Registration sensor come short (Cassette 3 feeding)	Registration sensor (RS) does not turn on during paper feed from cassette 3 (paper feeder).	E
4004	Registration sensor come short (Cassette 4 feeding)	Registration sensor (RS) does not turn on during paper feed from cassette 4 (paper feeder).	E
4012	Registration sensor retention (Cassette 2 feeding)	Registration sensor (RS) does not turn off during paper feed from cassette 2 (paper feeder).	D
4013	Registration sensor retention (Cassette 3 feeding)	Registration sensor (RS) does not turn off during paper feed from cassette 3 (paper feeder).	D
4014	Regist sensor retention (Cassette 4 feeding)	Registration sensor (RS) does not turn off during paper feed from cassette 4 (paper feeder).	D
4201	Fuser eject sensor come short (Cassette 1 feeding)	Fuser eject sensor (FUES) does not turn on during paper feed from cassette 1.	D
4202	Fuser eject sensor come short (Cassette 2 feeding)	Fuser eject sensor (FUES) does not turn on during paper feed from cassette 2 (paper feeder).	D
4203	Fuser eject sensor come short (Cassette 3 feeding)	Fuser eject sensor (FUES) does not turn on during paper feed from cassette 3 (paper feeder).	D
4204	Fuser eject sensor come short (Cassette 4 feeding)	Fuser eject sensor (FUES) does not turn on during paper feed from cassette 4 (paper feeder).	D
4208	Fuser eject sensor come short (Duplex feeding)	Fuser eject sensor (FUES) does not turn on during paper feed from duplex section.	D
4209	Fuser eject sensor come short (MPF feeding)	Fuser eject sensor (FUES) does not turn on during paper feed from MP tray.	D

*: Refer to figure 1-4-1 for paper misfeed indication (see page 1-4-1).

TONER

Code	Contents	Conditions	Jam location*
4211	Fuser eject sensor retention (Casette 1 feeding)	Fuser eject sensor (FUES) does not turn off during paper feed from cassette 1.	D
4212	Fuser eject sensor retention (Casette 2 feeding)	Fuser eject sensor (FUES) does not turn off during paper feed from cassette 2 (paper feeder).	D
4213	Fuser eject sensor retention (Casette 3 feeding)	Fuser eject sensor (FUES) does not turn off during paper feed from cassette 3 (paper feeder).	D
4214	Fuser eject sensor retention (Casette 4 feeding)	Fuser eject sensor (FUES) does not turn off during paper feed from cassette 4 (paper feeder).	D
4218	Fuser eject sensor retention (Duplex feeding)	Fuser eject sensor (FUES) does not turn off during paper feed from duplex section.	D
4219	Fuser eject sensor retention (MPF feeding)	Fuser eject sensor (FUES) does not turn off during paper feed from MP tray.	D
9000	DP original feed sensor ON undetected	DP feed sensor (DPOFS) does not turn on within specified time during the first sheet feeding (Retry 5 times).	F
9001	DP narrowing	DP timing sensor (DPTS) turns off within the specified time since the sensor turns on.	F
9002	DP initial Jam	Sensor in the conveying system is on since original feeding starts.	F
9004	DP registration sensor OFF undetected	DP registration sensor (DPRS) is not turned on within specified time since original switchback operation starts.	F
9010	DP unit open	Document processor is opened during original feeding.	F
9011	DP cover open	The DP top cover is opened during original feeding.	F
9110	DP original feed sensor OFF undetected	DP original feed sensor (DPOFS) does not turn off within specified time of DP timing sensor (DPTS) turning on.	F
9200	DP registration sensor ON undetected	DP registration sensor (DPRS) does not turn on within specified time of DP original feed sensor (DPOFS) turning on.	F
9400	DP timing sensor ON undetected	DP timing sensor (DPTS) does not turn on within specified time of DP original feed sensor (DPOFS) turning on.	F
9410	DP timing sensor OFF undetected	DP timing sensor (DPTS) does not turn off within specified time of DP original feed sensor (DPOFS) turning off.	F

*: Refer to figure 1-4-1 for paper misfeed indication (see page 1-4-1).

TONER
www.tonerplus.com.ua

1-4-2 Troubleshooting

(1) First check items

If the paper is fed askew, jammed, curled, or leading-edge dog-eared, first perform to check the following items.

Check items	Check description	Corrective measures
Paper	1. Check the paper delivered is dog-eared, skewed, rumpled, loosely fused, or curled.	If a dog-ear has happened, check there are no objects existing in the conveying paths and, if any, fix. If the paper is fed askew or crumpled, perform the following No.2.If an inferior fusing or curling is observed and the fuser temperature is set to a abnormal value, when measured by performing maintenance mode U161, reset to the default. (see page 1-3-53)
	2. Check how paper is loaded in the cassette (paper feeder). Check that the paper has been properly aligned with width adjuster cursor and the rear guide; it has been loaded without skewing; or it is not damaged. (Crumpled paper, main unit jam)	Adjust the cursors to the size of the paper.
	3. Check how paper is loaded. Check if the cutting edge of the paper bundle inside is cumpled or bent.	If the cutting edge of the paper bundle is crumpled, fan the paper before loading. If the paper is folded, stretch before loading in the cassette
	4. Check the paper is damp, wavy, or curled.	1. Load the paper bundle in the cassette upside down. 2. Load the paper bundle after rotating it 180°and reload. 3. Change the paper.
	5. Check if the paper loaded was stored in a continuously humid place.	Instruct the user to store paper in a dry, less humid place. Install a cassette heater. (see page 1-2-25)
	6. Check if the paper conforms to the requirements.	Isolate the cause of the problem by replacing the paper with the recommended paper. (see page 1-1-1)
	7. Check the paper ejected is dog-eared, skewed, rumpled, loosely fused, or curled.	If the maintenance mode U161 shows that the fuser temperature is set to an abnormal value, reset it to the default. (see page 1-3-53)

TONER
www.tonerplus.com.ua

Check items	Check description	Corrective measures
Settings/ Detection	1. Check if the margin is 4.0+1.5/-1.0mm from the leading edge of paper. 2. Perform U034 to check the reference mark is situated at 20mm±1mm from the edge. (Fuser jam) (see page 1-3-22)	If the check line is not situated at 20mm±1mm from the leading edge, adjust the leading margin by U402. (see page 1-3-70)
	3. Check the panel if the paper size is correctly detected and the cassette size is not fixed.(Paper jam caused by continously fed paper) Perform U000 to obtain a Event Log to check if the paper size and the size of the paper loaded are met when jam has occurred and if the size of the original document and the paper size are met. see page 1-3-6)	If the paper size is incorrectly displayed, adjust the positions of the paper set guide cursors in accordance with the paper size, making sure that the paper is not askew to activate the size detector switch.
	4. Check that paper settings are made in accordance with the paper being used. (Jam caused by faulty separation)	Select Original/ Paper settings under common settings in the system menu to set media type and weight of paper.
Coveying unit	Check the main unit vertical conveying unit or the front and back parts and right and left parts of the deck's horizontal conveying unit are slightly strained and closed.	To open, first open the right cover and close firmly. (Check the position of the safery switch)

TONER
www.tonerplus.com.ua

Check items	Check description	Corrective measures
Conveying guide, approaching guide, feed-shift guide	1. Check that the foreign objects including scrips, paper clips, etc., do not exist in the paper conveying paths.	If foreign objects such as scrips, etc., remain in the paper conveying path, remove.
	2. Check that the paper conveying guide and the separation needles are not contaminated with toner, paper dusts, etc.	If dirty, clean the guide, ribs (by a cloth), and the separation needles (by a cleaning brush).If the ribs of the conveying guides were broken or deposited with toner, replace.
	3. Check that the paper conveying guide has no barrs, deformations, or abrasions; and it is properly mounted without being floated.	Clean the conveying guide or the paper approaching guide.Remove any protrusions including barrs.If floated, fix it properly.If deformation or abrasion is observed, replace.
	4. Check that the guide. Check that the guide is smoothly operative when manipulated.	If the guide is inoperative or won't operate smoothly, replace the guide or the unit.
	5. Check that the guide. Perform U033 to check the operation of the solenoid to sight-check or audio-check its action. (see page 1-3-21)	If the guide is inoperative or won't operate smoothly, re-assemble the guide or replace the solenoid or the unit.

TONER
www.tonerplus.com.ua

Check items	Check description	Corrective measures
Conveying roller, feed roller	1. Check the conveying rollers have no paper dusts, toner, or foreign objects stucked.Check a variation of the external diameter of the roller or abrasion is not observed with the coveying roller.	Clean the conveying rollers or the pollyes. If variation in the external diameter or abrasion is observed, replace.
	2. Turn the cover safety switch on and perform U030 - Motor and U032 - Clutch, check they operate normally. * : At checking the clutch by U032, confirm that the roller won't turn when the motor is turned on. (see page 1-3-18,1-3-20)	If the conveying motor or the clutch is inoperative, replace. If stained, replace the clutch. If the clutch is kept turned on due to a tensioned wire, reroute wires.
	3. Check the conveying roller rotates without overloading. Check the axle holder or the roller shaft are not contaminated. Check that the spring has not fallen off and is mounted so that it is properly applying pressure against the rollers or pulleys.	Clean the roller axle or the axle holder.Re-assemble it while checking the pressure of the spring.
Sensor	1. Check if it does not operate with smoothness due to an abnormal move or dropping off of the actuator of the coveying switch.	Re-assemble the actuator or the return spring.
	2. Check that the surface of the sensor and the recveptor black felt pieces are not contaminated with toner, paper dusts, etc.	If dirty, clean the sensor or the black felt piece.
	3. Perform U031 - Conveying switch to check the sensors are normal without flickering, etc. (see page1-3-19)	If U031has revealed that the sensor is inoperative, replace the switch.
Static	Check if the location is susceptible to build static discharge at the conveying guide during printing.	Re-assemble and re-wire the static discharge sheet at the ejection unit or the metal guide at the tranfer unit so that they are properly grounded.

TONER
www.tonerplus.com.ua

(2) Items and corrective actions relating to the device that will cause paper jam

Jam types	Check description	Corrective measures
No-paper-feed jam or the leading edge of paper is curled back at the position of the roller (J0501,J0502, J0503,J0504, J0509)	1. Check if the jammed paper or the printed paper has a tear caused by the roller at its leading edge.	Replace the paper feed roller.(Service life of rubber roller is 150k.) Increase the spring pressure to pinch the separation rollers if the component is undue to its expected life.Replace the spring.
	2. Check abrasion and paper dusts on the feed roller and forward rollers.	Clean the paper feed roller and the pickup roller. Or, if not amended, replace.
	3. Perform U032 to check the pickup roller and paper feed roller are rotating.	If disconnected or or stained, replace the primary paper feed clutch.
	4. Check that the conveying force of the pickup roller is sufficient.	Increase the conveying force during paper pickup by increasing the spring load of the pickup roller.
	5. Check the film is sufficiently protruded in front of approching the feed roller and the nip.(Too wide a gap against the feed roller.)	Amount of protrusion of film in approaching (Gap: 0.2 - 0.5 mm) must be maintained after adjustment.
	6. Check the separation roller is not disturbed as a driving component is in contact with the frame during the separation roller is in motion.	If it gets in contact, replace the primary paper feed unit.
	7. Depress the release lever to release the pressure of the primary feed rollers to check that the retard holder falls.(The pressure by the retard roller to the feed roller is decreased.)	Modify mounting the retard holder fixing plate.

TONER
www.tonerplus.com.ua

Jam types	Check description	Corrective measures
Multiple-feed Jam (J0511, J0512, J0513, J0514, J0519)	1. Check if the cutting edge of the paper bundle is crumpled or the cassette is loaded with multiple times of replenishing paper.	If the cutting edge of the paper bundle is crumpled or the cassette is loaded with multiple times of replenishing paper, load new paper.
	2. Checking paper size. Check that the size of the loaded paper and the paper size chosen on the operator panel are met.	If the paper size does not agree. 1. If the cassette cursors are open against the paper, set it properly. 2. Insert the cassette until the paper size detector switch is turned on. If the size is not detectable while automatic sizing is enabled, replace the size detection switch.
		If the paper size agrees 1. If paper other than complying the requirements such as coated paper, inkjet paper, etc., is used, replace the paper. 2. RE-assemble the retard roller in the primary paper feed unit if it is mounted to the oppisite direction. 3. Check if the retard spring has not been fallen off of the mounting position. * : If the retard spring is not dropped off of the mount position, decrease the spring pressure that is applied to the separation rollers. 4. Replace the primary paper feed unit.
	3. Check if paper dusts and abrasion are observed on the paper fanning roller and retard roller.	If the paper fanning roller is dirty, clean. If abrasion is observed, replace.
	4. Select the motor by U032 and check the clutch rotates following the other component when the motor is turned on. (see page 1-3-20)	If the clutch rotates following the other component and its stain is observed, replace the clutch.
Duplex No-paper-feed Jam (J0508)/Duplex Multiple-feed Jam (J0518)	Perform U031 to check if the regist sensor is detected. (see page 1-3-19)	If the regist sensor is not working, replace the regist sensor.

TONER
www.tonerplus.com.ua

Jam types	Check description	Corrective measures
PF conveying sensor stay jam (J1413, J1414, J1614)	1. Check to see if the actuator is operative without hinderance.	If it won't operate without hinderance, re-assemble or replace the actuator's return spring.
	2. Perform U031 to check the operation of the sensor. (see page 1-3-19)	If the sensor is inoperative, replace.
	3. Select the motor by U032 and check if the PF paper feed clutch rotates following the other component. (see page 1-3-20)	If stained, replace the clutch.Re-assmeble the clutch so that it is not continuously energized. (Change of wirings, etc.)
	4. Check if the conveying guide is twisted to be mounted.(If the mounting parts of the guide is floated, the actuator won't protrude sufficiently.)	If the bracket is twisted to be mounted, remove the screw fixing the conveying guide and properly mount the bracket in the right position and fix again.
	5. Check no wrinkles are observed at the sluck of paper during paper feeding.	Adjust the cursors to the size of the paper.
PF conveying sensor non arrival jam (J1403/J1404, J1604)	1. Check to see if the actuator is operative without hinderance.	Re-assemble or replace the actuator's return spring.
	2. Perform U030 to check the operation of the motor. Check the transmission of the gear drive using U032. * : Check the conveying roller rotates and is movable in the direction of thrust without hinderance. (see page 1-3-18,1-3-20)	If the roller won't rotate without hinderance, loosen the screws for adjusting the position (at the gear train bracket) to mount the driving gears, and tighten so that a gap between the gears and frame is eliminated.

TONER
www.tonerplus.com.ua

Jam types	Check description	Corrective measures
Fuser eject sensor stay jam (J421X)	1. If paper jam occurrs at the feedshift guide in the eject unit, check if the guide is operative without hinderance.	If the distance between the housing and the feedshift guide is too small for the guide to move without hinderance, replace the eject unit.
	2. Perform U031 to check if the eject sensor does not show a false detection. (see page 1-3-19)	Replace the defective eject sensor or the eject unit.

TONER
www.tonerplus.com.ua

(3) Paper jam at feeding from cassette 1
Electrical parts that could cause paper jam during paper travelling at the primary feeding (to regist roller)

Timing of detection

Jam code
J0501,J0511

Measures

Related parts	
Main motor(MM)	Main/Engine PWB (M/EPWB)
Paper feed clutch (PFCL)	
Registration sensor (RS)	

Checking procedure at the occurrence of J0501/J502	Corrective action at the occurrence	On/Off control signal output connector (terminal), point of checking connection
1	Items for Initial Checks	See page 1-4-6
2	Registration sensor (RS): Conduct connectivity check, mounting location check, operation check (U031)	M/E PWB YC5-15
3	Paper feed clutch (PFCL): Operation check (U032)	M/E PWB YC4-1
4	Main motor : Operation check (U030)	M/E PWB YC4-7 (RDY), 9 (REM)
5	Main/Engine PWB: Replace	

TONER
www.tonerplus.com.ua

(4) Paper jam at feeding from cassette 2 (paper feerder)
Electrical parts that could cause paper jam during paper travelling at the primary feeding (to regist roller)

Timing of detection

Jam code
J0502,J0512,J4002,J4012

Corrective Action

Related parts	
PF paper feed motor (PFPFM)	PF main PWB (PF PWB)
PF paper feed clutch (PFPFCL)	
PF paper feed sensor (PFFS)	

Checking procedure at the occurrence of J0502/J0512	Corrective action at the occurrence	On/Off control signal output connector (terminal), point of checking connection
1	Items for Initial Checks	See page 1-4-6
2	PF Feed sensor 1 (PFFS1): Conduct connectivity check, mounting location check, operation check (U031)	PF main PWB YC5-6
3	PF paper feed clutch (PFPFCL1): Operation check (U032)	PF main PWB 2 YC4-1
4	PF paper feed motor : Operation check (U030)	PF main PWB YC4-3(RDY), 5(REM)
5	PF main PWB : Replace	

Checking procedure at the occurrence of J4002, J4012	Corrective action at the occurrence	On/Off control signal output connector (terminal), point of checking connection
1	Items for Initial Checks	See page 1-4-6
2	Ragistration sensor (RS): Conduct connectivity check, mounting location check, operation check (U031)	M/E PWB YC5-15
3	Paper feed clutch (PFCL): Operation check (U032)	M/E PWB YC4-1
4	Main motor : Operation check (U030)	M/E PWB YC4-7 (RDY), 9 (REM)
5	Main/Engine PWB : Replace	

TONER
www.tonerplus.com.ua

(5) Paper jam during manual feeding
Electrical parts that could cause paper jam during paper travelling at the primary feeding (to regist roller)

Timing of detection

Jam code
J0509,J0519

Corrective Action

Related parts	
Main motor (MM)	Main/Engine PWB (M/EPWB)
MP solenoid (MPSOL)	
Registration sensor (RS)	

Checking procedure at the occurrence of J0509/J0519	Corrective action at the occurrence	On/Off control signal output connector (terminal), point of checking connection
1	Items for Initial Checks	See page 1-4-6
2	Registration sensor (RS): Conduct connectivity check, mounting location check, operation check (U031)	M/E PWB YC5-15
3	MP solenoid (MPSOL): Operation check (U033)	M/E PWB 2 YC4-5
4	Main motor : Operation check (U030)	M/E PWB YC4-7 (RDY), 9 (REM)
5	Main/Engine PWB : Replace	

TONER
www.tonerplus.com.ua

(6) Paper jam at the duplex re-feeding part

Electrical parts that could cause paper jam during paper travelling at the primary feeding (to regist roller)

Timing of detection

Jam code
J0508,J0518

Corrective Action

Related parts	
Main motor (MM)	Main/Engine PWB (M/EPWB)
Duplex motor (DUM)	
Registration sensor (RS)	

Checking procedure at the occurrence of J0508/J0518	Corrective action at the occurrence	On/Off control signal output connector (terminal), point of checking connection
1	Items for Initial Checks	See page 1-4-6
2	Registration sensor (RS): Conduct connectivity check, mounting location check, operation check (U031)	M/E PWB YC5-15
3	Duplex motor : Operation check (U030)	M/E PWB YC2
4	Main motor : Operation check (U030)	M/E PWB YC4-7 (RDY), 9 (REM)
5	Main/Engine PWB : Replace	

TONER
www.tonerplus.com.ua

(7) Electrical parts that could cause paper jam at the transfer , the fuser and the eject parts

Timing of detection

Jam code
J4201,J4211

Corrective Action

Related parts	
Main motor (MM)	Main/Engine PWB (M/EPWB)
Registration clutch (RCL)	
Fuser ejection sensor (FUES)	

Checking procedure at the occurrence of J4201/J4212	Corrective action at the occurrence	On/Off control signal output connector (terminal), point of checking connection
1	Items for Initial Checks	See page 1-4-6
2	Registration sensor (RS) : Conduct connectivity check, mounting location check, operation check (U031)	M/E PWB YC5-15
3	Registration clutch (RCL) : Operation check (U032)	M/E PWB YC4-3
4	Main motor : Operation check (U030)	M/E PWB YC4-7 (RDY), 9 (REM)
5	Main/Engine PWB : Replace	

TONER
www.tonerplus.com.ua

1-4-3 Self-diagnostic function

(1) Self-diagnostic function

This machine is equipped with self-diagnostic function. When a problem is detected, the machine stops printing and display an error message on the operation panel. An error message consists of a message prompting a contact to service personnel and a four-digit error code indicating the type of the error.

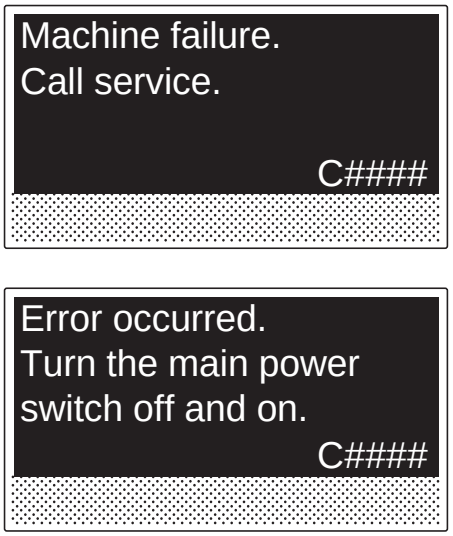

Figure 1-4-3

TONER
www.tonerplus.com.ua

(2) Self diagnostic codes

If the part causing the problem was not supplied, use the unit including the part for replacement

Caution:

Before attempting to check the power supply and the fuser unit, be sure to turn the power switch off and unplug the machine from power. Allow at least 5 seconds before starting to conduct service until the capacitors on the circuit boards have been completely discharged.

To reset a service call regarding the Maintenance T display and the DP, performing U906 Disconnection at Defect is required. (See page 1-3-84)

.

Code	Contents	Related parts	Check procedures/ corrective measures
0030	**FAX control PWB system error** Processing with the fax software was disabled due to a software problem.	FAX control PWB	1. Turn the main power swtch off and after 5 seconds, re-mount the FAX controller PWB, then turn power on. 2. Reinstall the fax software. 3. Replace the FAX control PWB.
0060	**Main/Engine PWB mismatch** Unmatching engine and engine sub boards. Defective engine subboard	Main/Engine PWB	1. Turn the main power swtch off and after 5 seconds, then turn power on. 2. Replace the main/engine PWB (see page 2-2-10).
0100	**Backup memory device error**	EEPROM (Main/Engine PWB)	1. Turn the main power swtch off and after 5 seconds, then turn power on. 2. Check that the EEPROM on the main circuit PWB is peroperly installed on the main circuit PWB and, if not, re-install it. 3. Replace the main/engine PWB (see page 2-2-10).
0120	**MAC address data error** For data in which the MAC address is invalid.	EEPROM (Main/Engine PWB)	1. Turn the main power swtch off and after 5 seconds, then turn power on. 2. Check the MAC address on the network status page. 3. If it is blank, obtain an EEPROM with its MAC address written from the service support and install. 4. Replace the main/engine PWB (see page 2-2-10).

TONER
www.tonerplus.com.ua

Code	Contents	Related parts	Check procedures/ corrective measures
0150	**Backup memory read/write error (main/engine PWB)** No response is issued from the device in reading/writing for 5 ms or more and this problem is repeated 5 times successively. Mismatch of reading data from 2 locations occurs 8 times successively. Mismatch between writing data and reading data occurs 8 times successively.	EEPROM (Main/Engine PWB)	1. Turn the main power swtch off and after 5 seconds, then turn power on. 2. Check that the EEPROM is peroperly installed on the main/engine PWB and re-install it. 3. Replace the main/engine PWB (see page 2-2-10). 4. Check the EEPROM and if the data are currupted, contact the service support.
0160	**Backup memory data error (main/engine PWB)** Reading data from EEPROM is abnormal.	EEPROM	1. Turn the main power swtch off and after 5 seconds, then turn power on. 2. Execute U021 - memory initializing.(see page 1-3-17) 3. If the EEPROM data are currupted, contact the service support.
0170	**Billing counting error** The values on the main circuit PWB and on the engine do not match for any of charging counter, life counter, and scanner counter.	EEPROM	1. Check that the EEPROMs installed in the main/engine PWB are correct and, if not, use the correct EEPROM for the model. 2. If the EEPROM data are currupted, contact the service support.
		Main/Engine PWB	Replace the main/engine PWB (see page 2-2-10).
0180	**Machine number mismatch** Machine number of main/ engine does not match.	Data damage of EEPROM.	1. Confirm the machine data for the main/ engine units by using U004 (see page 1-3-15). 2. If the serial number data of different models is alternately displayed, install the correct EEPROM in the PWB of the wrong serial number data. 3. Contact the Service Support.
0190	**Backup memory device error (main/engine PWB)**	Main/Engine PWB	Replace the main/engine PWB (see page 2-2-10).
0630	**DMA error** DMA transmission of image data does not complete within the specified period of time.	Main/Engine PWB	1. Confirm that the wiring connector is firmly connected and, if necessary, connect the connector all the way in. 2. If the wiring is disconnected, shorted or grounded, replace the wiring. 3. Replace the main/engine PWB (see page 2-2-10).

TONER
www.tonerplus.com.ua

Code	Contents	Related parts	Check procedures/ corrective measures
0800	**Image processing error** JAM010X is detected twice.	Main/Engine PWB	Replace the main/engine PWB (see page 2-2-10).
0840	**Faults of RTC** ("Time for maintenance T" is displayed) [Check at power up] The RTC setting has reverted to a previous state. The machine has not been powered for 5 years (compared to the settings stored periodically in the EEPROM). The RTC setting is older than 00:01 on January 1, 2000. [Checked periodically (in 5-minute interval) after powered up] The RTC setting has reverted to a state older than the last time it was checked. 10 minutes have been passed since the previous check.	Battery (main PWB)	1. Make sure that the back-up batteries on the main/engine PWB are not short-circuited. 2. Reset Maintenance T by executing U906 (see page 1-3-84). 3. If the same C call is displayed when power is switched on and off, replace the back up battery. 4. If communication error (due to a noise, etc.) is present with the RTC on the main/engine PWB, check the PWB is properly grounded.
		Main/Engine PWB	Replace the main/engine PWB (see page 2-2-10).
1810	**Paper feeder unit 2 communication error** A communication error from paper feeder is detected 10 times in succession.	Paper feeder	Check the wiring connection status with the main unit and, if necessary, try connecting it again.
		PF main PWB	1. Confirm that the wiring connector is firmly connected and, if necessary, connect the connector all the way in. PF main PWB (YC1) and main/engine PWB (YC18) 2. If the wiring is disconnected, shorted or grounded, replace the wiring. 3. Replace the PF main PWB.
		Main/Engine PWB	1. Check the main/engine software and upgrade to the latest, if necessary. 2. Replace the main/engine PWB (see page 2-2-10).

TONER
www.tonerplus.com.ua

Code	Contents	Related parts	Check procedures/ corrective measures
1820	**Paper feeder unit 3 communication error** A communication error from paper feeder is detected 10 times in succession.	Paper feeder	Check the wiring connection status with paper feeder unit 2 and, if necessary, try connecting it again.
		PF main PWB	1. Confirm that the wiring connector is firmly connected and, if necessary, connect the connector all the way in. PF main PWB (YC1) and PF main PWB (YC2). 2. If the wiring is disconnected, shorted or grounded, replace the wiring. 3. Replace the PF main PWB.
		Main/Engine PWB	1. Check the main/engine software and upgrade to the latest, if necessary. 2. Replace the main/engine PWB (see page 2-2-10).
1830	**Paper feeder unit 4 communication error** A communication error from paper feeder is detected 10 times in succession.	Paper feeder	Check the wiring connection status with paper feeder unit 3 and, if necessary, try connecting it again.
		PF main PWB	1. Confirm that the wiring connector is firmly connected and, if necessary, connect the connector all the way in. PF main PWB (YC1) and PF main PWB (YC2). 2. If the wiring is disconnected, shorted or grounded, replace the wiring. 3. Replace the PF main PWB.
		Main/Engine PWB	1. Check the main/engine software and upgrade to the latest, if necessary. 2. Replace the main/engine PWB (see page 2-2-10).
1900	**Paper feeder unit 2 EEPROM error** When writing the data, read and write data does not match 4 times in succession.	PF main PWB (EEPROM)	1. Confirm that the wiring connector is firmly connected and, if necessary, connect the connector all the way in. 2. Replace the PF main PWB.
1910	**Paper feeder unit 3 EEPROM error** When writing the data, read and write data does not match 4 times in succession.	PF main PWB (EEPROM)	1. Confirm that the wiring connector is firmly connected and, if necessary, connect the connector all the way in. 2. Replace the PF main PWB.

TONER
www.tonerplus.com.ua

Code	Contents	Related parts	Check procedures/ corrective measures
1920	**Paper feeder unit 4 EEPROM error** When writing the data, read and write data does not match 4 times in succession.	PF main PWB (EEPROM)	1. Confirm that the wiring connector is firmly connected and, if necessary, connect the connector all the way in. 2. Replace the PF main PWB.
2000	**Main motor steady-state error** After main motor is stabilized, the ready signal is not ready for 1 s continuously.	Main motor	1. Check the drive gear can rotate or they are not unusually loaded and, if necessary, replace. 2. Confirm that the wiring connector is firmly connected and, if necessary, connect the connector all the way in. main motor and main/engine PWB (YC4) 3. If the wiring is disconnected, shorted or grounded, replace the wiring. 4. Replace the main motor (see page 1-5-57).
		Main/Engine PWB	1. Check the main/engine software and upgrade to the latest, if necessary. 2. Replace the main/engine PWB (see page 2-2-10).
2010	**Main motor startup error** Main motor is not stabilized within 3 s since the motor is activated.	Main motor	1. Confirm that the wiring connector is firmly connected and, if necessary, connect the connector all the way in. main motor and main/engine PWB (YC4) 2. If the wiring is disconnected, shorted or grounded, replace the wiring. 3. Replace the main motor (see page 1-5-57).
		Main/Engine PWB	1. Check the main/engine software and upgrade to the latest, if necessary. 2. Replace the main/engine PWB (see page 2-2-10).

TONER
www.tonerplus.com.ua

Code	Contents	Related parts	Check procedures/ corrective measures
3100	**Scanner carriage error** The home position is not correct when the power is turned on, at the end of a reading process of the table and document processor.	Scanner motor	1. Move the scanner by the hand to check whether it is unusually difficult to move. 2. Check that the scanner driving belt is not disengaged. 3. Confirm that the wiring connector is firmly connected and, if necessary, connect the connector all the way in. Scanner motor and main/engine PWB (YC1) 4. If the wiring is disconnected, shorted or grounded, replace the wiring. 5. Replace the scanner motor.
		Home position sensor	1. Check that the sensor is correctly positioned. 2. Confirm that the wiring connector is firmly connected and, if necessary, connect the connector all the way in. Home position sensor and main/engine PWB (YC7) 3. Replace the home position sensor.
		Main/Engine PWB	Replace the main/engine PWB (see page 2-2-10).
3200	**Exposure lamp error** When a lamp is made to turn on one side at a time, the white standard data at the time of an initial is lower than a rated value.	CIS	Reinsert the connector. Also check for continuity within the connector cable. If none, replace the cable. CIS and main/engine PWB (YC2011)
			Replace the image scanner unit (see page 1-5-21).
		Main/Engine PWB	Replace the main/engine PWB and check for correct operation (see page 2-2-10).
3210	**CIS lamp error** When a lamp is made both to turn on, the white standard data at the time of an initial is lower than a rated value.	CIS	1. Execute U906 Separating Operation Release (see page 1-3-84). 2. Confirm that the wiring connector is firmly connected and, if necessary, connect the connector all the way in. CIS and main/engine PWB (YC2011) 3. If the wiring is disconnected, shorted or grounded, replace the wiring. 4. Replace the CIS and execute U411 (see page 1-3-73).
		Main/Engine PWB	Replace the main/engine PWB and check for correct operation (see page 2-2-10).

TONER
www.tonerplus.com.ua

Code	Contents	Related parts	Check procedures/ corrective measures
3300	**Optical system (AGC) error** One of the gains is FF or 00 during the CIS lamp AGC is being processed.	CIS	1. Execute U906 Separating Operation Release (see page 1-3-84). 2. Confirm that the wiring connector is firmly connected and, if necessary, connect the connector all the way in. CIS and main/engine PWB (YC2011) 3. If the wiring is disconnected, shorted or grounded, replace the wiring. 4. Replace the CIS and execute U411 (see page 1-3-73).
		Main/Engine PWB	Replace the main/engine PWB and check for correct operation (see page 2-2-10).
3500	**Communication error between scanner and ASIC** An error code is detected.	CIS	1. Execute U906 Separating Operation Release (see page 1-3-84). 2. Confirm that the wiring connector is firmly connected and, if necessary, connect the connector all the way in. CIS and main/engine PWB (YC2011) 3. If the wiring is disconnected, shorted or grounded, replace the wiring. 4. Replace the CIS and execute U411 (see page 1-3-73).
		Main/Engine PWB	Replace the main/engine PWB and check for correct operation (see page 2-2-10).
3600	**Scanner sequence error**	Main/Engine PWB	1. Execute U021 memory initializing (see page 1-3-17). 2. Replace the main/engine PWB and execute U411 (see page 1-3-73).
4000	**Polygon motor steady-state error** After Polygon motor is stabilized, the ready signal is at the H level for 1 s continuously.	Polygon motor (LSU)	1. Confirm that the wiring connector is firmly connected and, if necessary, connect the connector all the way in. Polygon motor and main/engine PWB (YC10) 2. If the wiring is disconnected, shorted or grounded, replace the wiring. 3. Replace the laser scanner unit (see page 1-5-27).
		Main/Engine PWB	1. Check the main/engine software and upgrade to the latest, if necessary. 2. Replace the main/engine PWB (see page 2-2-10).

TONER
www.tonerplus.com.ua

Code	Contents	Related parts	Check procedures/ corrective measures
4010	**Polygon motor synchronization error** After polygon motor is driven, the polygon motor speed won't stabilize within 10 s.	Polygon motor (LSU)	1. Confirm that the wiring connector is firmly connected and, if necessary, connect the connector all the way in. Polygon motor and main/engine PWB (YC10) 2. If the wiring is disconnected, shorted or grounded, replace the wiring. 3. Replace the laser scanner unit (see page 1-5-27).
		Main/Engine PWB	1. Check the main/engine software and upgrade to the latest, if necessary. 2. Replace the main/engine PWB (see page 2-2-10).
4200	**BD steady-state error** The BD signal is not detected.	APC PWB (LSU)	1. Confirm that the FCC wiring connector is not distorted and connect the FCC wiring all the way in. Laser scanner unit and main/engine PWB (YC2010) 2. If the FCC wiring is disconnected, shorted or grounded, replace the FCC wiring. 3. Replace the laser scanner unit (see page 1-5-27).
		Main/Engine PWB	1. Check the main/engine software and upgrade to the latest, if necessary. 2. Replace the main/engine PWB (see page 2-2-10).

TONER
www.tonerplus.com.ua

Code	Contents	Related parts	Check procedures/ corrective measures
6000	**Broken fuser heater wire (main)** When the fuser thermistor 1 reaches primary stable temperature after a warm-up start and the fuser thermistor 2 is less than 90 ° C/194 °F.	Fuser unit	1. Check that no paper jam is present. 2. Confirm that the wiring connector is firmly connected and, if necessary, connect the connector all the way in. Fuser unit and mmain/engine PWB (YC14) 3. If the wiring is disconnected, shorted or grounded, replace the wiring. 4. Replace the Fuser unit and execute U167 counter clear (see page 1-3-54). (Deteriorated sensitivity due to the toner adhered to the center thermistor.)
		Main/Engine PWB	1. Check the main/engine software and upgrade to the latest, if necessary. 2. Replace the main/engine PWB (see page 2-2-10).
		Power source PWB	1. Confirm that the wiring connector is firmly connected and, if necessary, connect the connector all the way in. Power source PWB (YC4) and main/ engine PWB (YC14) 2. Replace the power source PWB (see page 2-2-25).
		Fuser heater	1. Replace the Fuser unit and execute U167 counter clear (see page 1-3-54).
6020	**Abnormally high fuser thermistor 2 temperature (Center)** Fuser thermistor 2 detects a temperature higher than 210°C/410°F.	Fuser unit	1. Confirm that the wiring connector is firmly connected and, if necessary, connect the connector all the way in. Fuser unit and main/engine PWB (YC14) 2. If the wiring is disconnected, shorted or grounded, replace the wiring. 3. Replace the Fuser unit (see page 1-5-49).
		Main/Engine PWB	1. Check the main/engine software and upgrade to the latest, if necessary. 2. Replace the main/engine PWB (see page 2-2-10).

TONER
www.tonerplus.com.ua

Code	Contents	Related parts	Check procedures/ corrective measures
6030	**Broken fuser thermistor 2 wire (Center)** Input from fuser thermistor 2 is 1012 or more (A/D value) continuously for 5 s. Input from fuser thermistor 2 is1012 (A/D value) or more whenthe temperature at the fuser thermistor 1 is 70°C/ 158°F or more.	Fuser unit	1. Check that no paper jam is present. 2. Confirm that the wiring connector is firmly connected and, if necessary, connect the connector all the way in. Fuser unit and main/engine PWB (YC14) 3. If the wiring is disconnected, shorted or grounded, replace the wiring. 4. Replace the Fuser unit and execute U167 counter clear (see page 1-3-54). (Deteriorated sensitivity due to the toner adhered to the center thermistor.)
		Main/Engine PWB	1. Check the main/engine software and upgrade to the latest, if necessary. 2. Replace the main/engine PWB (see page 2-2-10).
		Fuser thermistor 2	1. Replace the Fuser unit and execute U167 counter clear (see page 1-3-54).
		Fuser thermostat (triggered)	1. Confirm that the wiring connector is firmly connected and, if necessary, connect the connector all the way in. Fuser unit and fuser heater PWB (YC1) 2. If the wiring is disconnected, shorted or grounded, replace the wiring. 3. Replace the Fuser unit and execute U167 counter clear (see page 1-3-54).

TONER
www.tonerplus.com.ua

Code	Contents	Related parts	Check procedures/ corrective measures
6200	**Broken fuser heater wire (Sub)** Fuser thermistor 1 does not reach primary stable temperature even after 30 s during warming up. Fuser thermistor 1 detects a temperature lower than 100°C/212°F for 60 s during ready.	Fuser unit	1. Confirm that the wiring connector is firmly connected and, if necessary, connect the connector all the way in. Fuser unit and main/engine PWB (YC14) 2. If the wiring is disconnected, shorted or grounded, replace the wiring. 3. Replace the Fuser unit and execute U167 counter clear (see page 1-3-54).
		Main/Engine PWB	1. Check the main/engine software and upgrade to the latest, if necessary. 2. Replace the main/engine PWB (see page 2-2-10).
		Fuser thermistor 1	1. Replace the Fuser unit and execute U167 counter clear (see page 1-3-54).
6220	**Abnormally high fuser thermistor 1 temperature (Edge)** Fuser thermistor 1 detects a temperature higher than 230°C/446°F.	Fuser unit	1. Confirm that the wiring connector is firmly connected and, if necessary, connect the connector all the way in. Fuser unit and main/engine PWB (YC14) 2. If the wiring is disconnected, shorted or grounded, replace the wiring. 3. Replace the Fuser unit and execute U167 counter clear (see page 1-3-54).
		Main/Engine PWB	1. Check the main/engine software and upgrade to the latest, if necessary. 2. Replace the main/engine PWB (see page 2-2-10).

TONER
www.tonerplus.com.ua

Code	Contents	Related parts	Check procedures/ corrective measures
6230	**Broken fuser thermistor 1 wire (Edge)** Input from fuser thermistor 1 is 1012 or more (A/D value) continuously for 5 s. Input from fuser thermistor 1 is1012 (A/D value) or more whenthe temperature at the fuser thermistor 2 is 70°C/ 158°F or more.	Fuser unit	1. Confirm that the wiring connector is firmly connected and, if necessary, connect the connector all the way in. Fuser unit and main/engine PWB (YC14) 2. If the wiring is disconnected, shorted or grounded, replace the wiring. 3. Replace the Fuser unit and execute U167 counter clear (see page 1-3-54).
		Main/Engine PWB	1. Check the main/engine software and upgrade to the latest, if necessary. 2. Replace the main/engine PWB (see page 2-2-10).
6400	**Zero-cross signal error** While fuser heater ON/OFF control is performed, the zero-cross signal is not input within 3 s.	Fuser unit	1. Confirm that the wiring connector is firmly connected and, if necessary, connect the connector all the way in. Power source PWB (CN2) and main/ engine PWB (YC14) 2. If the wiring is disconnected, shorted or grounded, replace the wiring. 3. Replace the power source PWB.

TONER
www.tonerplus.com.ua

Code	Contents	Related parts	Check procedures/ corrective measures
7100	**Toner sensor error** Sensor output value of 8 or less.	Toner sensor	1. Check the toner sensor output by U150 (see page 1-3-51). 2. Confirm that the wiring connector is firmly connected and, if necessary, connect the connector all the way in. Toner sensor and main/engine PWB (YC9) 3. If the wiring is disconnected, shorted or grounded, replace the wiring. 4. Check that the gears of the Developer unit are not damaged and the spiral can rotate. 5. Replace the Developer unit (see page 1-5-36).
		Toner motor	1. Draw out the toner container and execute U135 to check the toner motor operation (see page 1-3-48). 2. Check the drive gear can rotate or they are not unusually loaded and, if necessary, replace. 3. Confirm that the wiring connector is firmly connected and, if necessary, connect the connector all the way in. Toner motor and main/engine PWB (YC12) 4. If the wiring is disconnected, shorted or grounded, replace the wiring. 5. Replace the Toner motor.
		Main/Engine PWB	1. Check the main/engine software and upgrade to the latest, if necessary. 2. Replace the main/engine PWB (see page 2-2-10).

TONER
www.tonerplus.com.ua

Code	Contents	Related parts	Check procedures/ corrective measures
7800	**Broken temperature sensor wire** Input from temperature sensor is 0.3 V (A/D value) or less	Outer temperature sensor	1. Confirm that the wiring connector is firmly connected and, if necessary, connect the connector all the way in. Temperature sensor and main/engine PWB (YC6) 2. If the wiring is disconnected, shorted or grounded, replace the wiring. 3. Replace the temperature sensor.
		Main/Engine PWB	1. Check the main/engine software and upgrade to the latest, if necessary. 2. Replace the main/engine PWB (see page 2-2-10).
7810	**Short-circuited tempera-ture sensor wire** Input from temperature sensor is 0.3 V (A/D value) or more	Outer temperature sensor	1. Confirm that the wiring connector is firmly connected and, if necessary, connect the connector all the way in. Temperature sensor and main/engine PWB (YC6) 2. If the wiring is disconnected, shorted or grounded, replace the wiring. 3. Replace the temperature sensor.
		Main/Engine PWB	1. Check the main/engine software and upgrade to the latest, if necessary. 2. Replace the main/engine PWB (see page 2-2-10).
7900	**Drum EEPROM error** No response is issued from the device in reading/writing for 5 ms or more and this problem is repeated five times successively.	DR PWB	1. Confirm that the wiring connector is firmly connected and, if necessary, connect the connector all the way in. DR PWB and main/engine PWB (YC9) 2. If the wiring is disconnected, shorted or grounded, replace the wiring. 3. Replace the Drum unit (see page 1-5-41).
		Main/Engine PWB	1. Check the main/engine software and upgrade to the latest, if necessary. 2. Replace the main/engine PWB (see page 2-2-10).

TONER
www.tonerplus.com.ua

Code	Contents	Related parts	Check procedures/ corrective measures
9000	**Document processor communication error** A communication error from document processor is detected 10 times in succession.	DP main PWB	1. Check that the versions of the main unit firmware and the DP firmware are identical. 2. Confirm that the wiring connector is firmly connected and, if necessary, connect the connector all the way in. DP main PWB(YC1) and main/engine PWB (YC18) 3. If the wiring is disconnected, shorted or grounded, replace the wiring. 4. Replace the DP main PWB
9060	**DP EEPROM error** Mismatch of reading data from two locations occurs 3 times successively. Mismatch between writing data and reading data occurs 3 times successively.	DP main PWB	1. Execute U906 Separating Operation Release (see page 1-3-84). 2. Confirm that the EEPROM has been properly installed. 3. Replace the DP main PWB
		Device damage of EEPROM	Contact the Service Support.
F000	**Communication error between Main/Engine PWB and Operation PWB**	Main/Engine PWB	1. Turn the main power swtch off and after 5 seconds, then turn power on. 2. Check that the wirings and connetors between the main/engine PWB and the operation PWB are normal. Main/engine PWB (YC2010) and operation PWB (YC1) 3. Check that the DIMM memories in the main/engine PWB are well conducted and, if not, replace. 4. Execute U021initialize memory. (see page 1-3-17) 5. Replace the main/engine PWB.
		Operation PWB	Replace the operation PWB (see page 2-2-29).
F020	**Main/Engine PWB RAM check sum error**	Main memory (RAM)	Turn the main power switch off/on to restart the machine. If the error is not resolved, replace main/engine PWB (see page 2-2-10).

TONER
www.tonerplus.com.ua

Code	Contents	Related parts	Check procedures/ corrective measures
F040	**Communication error between Main/Engine PWB and Print engine**	Main/Engine PWB	1. Turn the main power swtch off and after 5 seconds, then turn power on. 2. Repair or replace the wire from the main/ engine PWB, that may be grounded. (Check short-circuit between 5V and 3.3V.) 3. Check the main/engine software and upgrade to the latest, if necessary. 4. If not corrected, replace the main/engine PWB (see page 2-2-10).
F050	**Print engine ROM check-sum error**	Main/Engine PWB	1. Turn the main power swtch off and after 5 seconds, then turn power on. 2. Confirm that the EEPROM has been properly installed. 3. Check the main/engine software and upgrade to the latest, if necessary. 4. If not corrected, Replace the main/ engine PWB (see page 2-2-10).

TONER
www.tonerplus.com.ua

1-4-4 Image formation problems

Isolate the component an image defect has occurred from.
<A guide to isolate the component of the cause.>
Run U089 to print a test page and check whether an image defect happens.
YES: Main unit as the cause of defect
NO: Scanner as the cause of defect
Perform enlarged or reduced copying and verify if the defective images are enlarged or reduced, accordingly.
YES: Scanner as the cause of defect

1. Scanner as the cause of defect:
   If the defect occurs with copying or sending, refer to P.1-4-37.
   (Defects caused by a reading error that occurs at the original (glass) LED lamp to CIS.)

   Isolate the problem at the location that the originals are scanned.
   a. DP (read by CIS)
   b. On the contact glass (read by CIS)

2. Main unit as the cause of defect: refer to P. 1-4-37.
   (A defect of image forming occurs from the rendering process that involves charging, drum, LSU, developer, and primary transferring.)

<Flow of image data>

Copying :

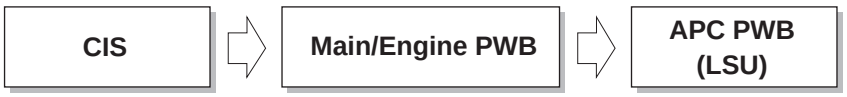

Sending :

Printing data from PC :

TONER
www.tonerplus.com.ua

1-4-5 Poor image (due to DP and scanner reading)

(1) No image appears (entirely white).

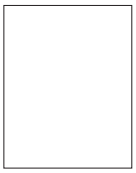

See page1-4-38

(2) No image appears (entirely black).

See page1-4-40

(3) Image is too light.

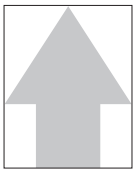

See page1-4-41

(4) The background is colored.

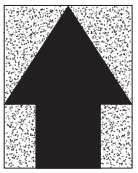

See page1-4-43

(5) White streaks are printed vertically.

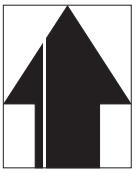

See page1-4-45

(6) Black streaks appear longitudinally.

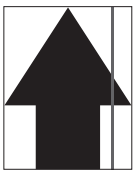

See page1-4-47

(7) Streaks are printed horizontally.

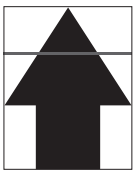

See page1-4-49

(8) One side of the print image is darker or brighter than the other.

See page1-4-51

(9) Black dots appear on the image.

See page1-4-53

(10) Image is blurred.

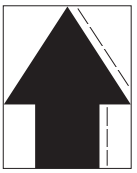

See page1-4-54

(11) The leading edge of the image is consistently misaligned with the original.

See page1-4-56

(12) Part of image is missing.

See page1-4-57

(13) Image is out of focus.

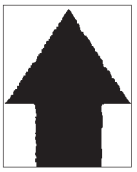

See page1-4-59

(14) Image center does not align with the original center.

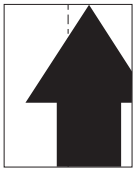

See page1-4-61

(15) Moires

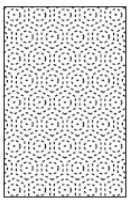

See page1-4-62

(16) Skewed image

See page1-4-63

(17) Abnormal image

See page1-4-65

TONER
www.tonerplus.com.ua

(1) No image appears (entirely white).

Print example
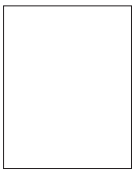

1. Table scanning

	Defective part	Check description	Corrective Action
1	Contact glass assy	Check the location the contact glass is mounted.	Re-mount the contact glass if it is hanged off.
2	FFC cable CIS	Check the FFC cable between the CIS and main/engine PWB is properly connected. Or, verify conduction of the wire.	Reinsert the connector if it its connection is loose. Or, if conduction is lot, replace the wire.
3	Home position sensor	Check the location the home position sensor is mounted.	Re-mount the home position sensor if it is hanged off.
4	Scanner drive belt	Check that the scanner drive belt is loosely mounted.	If the scanner drive belt is loosely mounted, secure the screws.
5	Scanner drive gear	Check that the scanner drive gear is loosely mounted.	If the scanner drive gear loosely mounted, secure the screw.
6	CIS PWB	The CIS PWB is defective.	Replace the ISU and perform U411. (see page 1-3-73)
7	Main/Engine PWB	The main/engine PWB is defective.	Replace the main/engine PWB.(see page 2-2-10)

TONER
www.tonerplus.com.ua

2. DP-scanning

	Defective part	Check description	Corrective Action
1	Original document	Verify the sides of the original document.	If the sides of the original document are reversed, place the original document properly.
2	Contact glass assy	Check the location the contact glass is mounted.	Re-mount the contact glass if it is hanged off.
3	FFC cable CIS	Check the FFC cable between the CIS and main/engine PWB is properly connected. Or, verify conduction of the wire.	Reinsert the connector if it its connection is loose. Or, if conduction is lot, replace the wire.
4	Home position sensor	Check the location the home position sensor is mounted.	Re-mount the home position sensor if it is hanged off.
5	Scanner drive belt	Check that the scanner drive belt is loosely mounted.	If the scanner drive belt is loosely mounted, secure the screws.
6	Scanner drive gear	Check that the scanner drive gear is loosely mounted.	If the scanner drive gear loosely mounted, secure the screw.
7	CIS PWB	The CIS PWB is defective.	Replace the ISU and perform U411. (see page 1-3-73)
8	Main/Engine PWB	The main/engine PWB is defective.	Replace the main/engine PWB.(see page 2-2-10)

TONER
www.tonerplus.com.ua

(2) No image appears (entirely black).

Print example


1. Table scanning

	Defective part	Check description	Corrective Action
1	FFC cable CIS	Check the FFC cable between the CIS and main/engine PWB is properly connected. Or, verify conduction of the wire.	Reinsert the connector if its connection is loose. Or, if conduction is lot, replace the wire.
2	CIS PWB	The CIS PWB is defective.	Replace the ISU and perform U411. (see page 1-3-73)
3	Main/Engine PWB	The main/engine PWB is defective.	Replace the main/engine PWB.(see page 2-2-10)

2. DP-scanning

	Defective part	Check description	Corrective Action
1	Scanning position of the DP	Confirm the value using maintenance mode U068, DP Read.	If a large value is observed in maintenance mode U068, DP Read, perform adjustment.(see page 1-3-33)
2	FFC cable CIS	Check the FFC cable between the CIS and main/engine PWB is properly connected. Or, verify conduction of the wire.	Reinsert the connector if its connection is loose. Or, if conduction is lot, replace the wire.
3	CIS PWB	The CIS PWB is defective.	Replace the ISU and perform U411. (see page 1-3-73)
4	Main/Engine PWB	The main/engine PWB is defective.	Replace the main/engine PWB.(see page 2-2-10)

TONER
www.tonerplus.com.ua

(3) Image is too light.

Print example


1. Table scanning

	Defective part	Check description	Corrective Action
1	The settings of the adjustment of density	Check the settings of the adjustment of density.	1. Deactivate EcoPrint if it is activated. Or, if the density is too low, chosse an image quality that suits the original docuemt in type. 2. Increase density. 3. Perform the background color adjustment using the system menu.
2	Settings of anti-offset	Check the settings of anti-offset.	If anti-offset is set to on, set it to off.
3	Adjustment of the scanner	Check the automatic adjustment of the scanner.	Perform maintenance mode U411, table(Chart1)_All. (see page 1-3-73)
4	Contact glass	Check whether the contact glass is dirty.	If the contact glass is dirty, clean the contact glass, and the bottom part of the shading plate.
5	Home position sensor	Check the location the home position sensor is mounted.	Re-mount the home position sensor if it is hanged off.
6	FFC cable CIS	Check the FFC cable between the CIS and main/engine PWB is properly connected. Or, verify conduction of the wire.	Reinsert the connector if its connection is loose. Or, if conduction is lot, replace the wire.
7	CIS assembly	Check the location the CIS assembly is mounted.	Re-mount the CIS assembly if it is hanged off.
8	CIS	CIS is defective.	Replace the CIS and perform U411.
9	Main/Engine PWB	The main/engine PWB is defective.	Replace the main/engine PWB.(see page 2-2-10)

TONER
www.tonerplus.com.ua

2. DP-scanning

	Defective part	Check description	Corrective Action
1	The settings of the adjustment of density	Check the settings of the adjustment of density.	1. Deactivate EcoPrint if it is activated. Or, if the density is too low, chosse an image quality that suits the original docuemt in type. 2. Increase density. 3. Perform the background color adjustment using the system menu.
2	Settings of anti-offset	Check the settings of anti-offset.	If anti-offset is set to on, set it to off.
3	Adjustment of the scanner	Check the automatic adjustment of the scanner.	Perform maintenance mode U411, table(Chart1)_All. (see page 1-3-73)
4	Contact glass	Check whether the contact glass is dirty.	If the contact glass is dirty, clean the contact glass, and the bottom part of the shading plate.
5	Home position sensor	Check the location the home position sensor is mounted.	Re-mount the home position sensor if it is hanged off.
6	Scanning position of the DP	Check whether the scanning position of the DP is wrong.	If the scanning position of the DP is shifted, perform maintenance mode U068, DP Read.(see page 1-3-33)
7	FFC cable CIS	Check the FFC cable between the CIS and main/engine PWB is properly connected. Or, verify conduction of the wire.	Reinsert the connector if its connection is loose. Or, if conduction is lot, replace the wire.
8	CIS assembly	Check the location the CIS assembly is mounted.	Re-mount the CIS assembly if it is hanged off.
9	CIS	CIS is defective.	Replace the CIS and perform U411.
10	Main/Engine PWB	The main/engine PWB is defective.	Replace the main/engine PWB.(see page 2-2-10)

TONER
www.tonerplus.com.ua

(4) The background is colored.

Print example
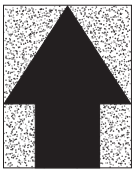

1. Table scanning

	Defective part	Check description	Corrective Action
1	Original document	1. Check if the background density of the original document is too dense. 2. Check if the original document is floated during scanning.	1. If the background density of the original document is too dense, perform automatic background adjustment.Or, adjust density with background adjustment. 2. If the original document is floated during scanning, press down the original document.
2	Adjustment of the scanner	Check the automatic adjustment of the scanner.	Perform maintenance mode U411, table(Chart1)_All. (see page 1-3-73)
3	Contact glass	Check whether the contact glass is dirty.	If the contact glass is dirty, clean the contact glass, and the bottom part of the shading plate.
4	Contact glass assy	Check the location the contact glass is mounted.	Re-mount the contact glass if is hanged off.
5	Home position sensor	Check the location the home position sensor is mounted.	Re-mount the home position sensor if it is hanged off.
6	FFC cable CIS	Check the FFC cable between the CIS and main/engine PWB is properly connected. Or, verify conduction of the wire.	Reinsert the connector if its connection is loose. Or, if conduction is lot, replace the wire.
7	CIS assembly	Check the location the CIS assembly is mounted.	Re-mount the CIS assembly if it is hanged off.
8	CIS	The CIS is defective.	Replace the CIS and perform U411. (see page 1-3-73)
9	Main/Engine PWB	The main/engine PWB is defective.	Replace the main/engine PWB.(see page 2-2-10)

TONER
www.tonerplus.com.ua

2. DP-scanning

	Defective part	Check description	Corrective Action
1	Original document	1. Check if the background density of the original document is too dense. 2. Check if the original document is floated during scanning.	1. If the background density of the original document is too dense, perform automatic background adjustment.Or, adjust density with background adjustment. 2. If the original document is floated during scanning, press down the original document.
2	Adjustment of the scanner	Check the automatic adjustment of the scanner.	Perform maintenance mode U411, table(Chart1)_All. (see page 1-3-73)
3	Contact glass	Check whether the contact glass is dirty.	If the contact glass is dirty, clean the contact glass, and the bottom part of the shading plate.
4	Contact glass assy	Check the location the contact glass is mounted.	Re-mount the contact glass if is hanged off.
5	Home position sensor	Check the location the home position sensor is mounted.	Re-mount the home position sensor if it is hanged off.
6	Installing DP	Check whether the DP frame is distorted or the hinges are damaged.	Replace the DP.
7	FFC cable CIS	Check the FFC cable between the CIS and main/engine PWB is properly connected. Or, verify conduction of the wire.	Reinsert the connector if its connection is loose. Or, if conduction is lot, replace the wire.
8	CIS assembly	Check the location the CIS assembly is mounted.	Re-mount the CIS assembly if it is hanged off.
9	CIS	The CIS is defective.	Replace the CIS and perform U411. (see page 1-3-73)
10	Main/Engine PWB	The main/engine PWB is defective.	Replace the main/engine PWB.(see page 2-2-10)

TONER
www.tonerplus.com.ua

(5) White streaks are printed vertically.

Print example
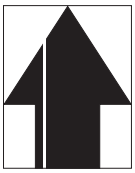

1. Table scanning

	Defective part	Check description	Corrective Action
1	Original document	Check whether the original document is dirty.	If the original document is dirty, replace.
2	Contact glass	Check whether the contact glass is dirty.	If the contact glass is dirty, clean the contact glass, and the bottom part of the shading plate.
3	CIS	Check that the lamp unit is contaminated with dusts.	If dusts are observed on the lamp unit, remove the dusts in the light paths.
4	ISU	Check whether the lens cover is hanged off.	Re-mount the lens cover if it is hanged off.
5	Shading plate	Check whether the shading plate is dirty.	If the shading plate is dirty, perform maintenance mode U063 to modify the shading position. If it does not cure, replace the contact glass assembly. (see page 1-3-28)
6	CIS	The CIS is defective.	Replace the CIS and perform U411. (see page 1-3-73)
7	Main/Engine PWB	The main/engine PWB is defective.	Replace the main/engine PWB.(see page 2-2-10)

2. DP-scanning

	Defective part	Check description	Corrective Action
1	Original document	Check whether the original document is dirty.	If the original document is dirty, replace.
2	Contact glass	Check whether the contact glass is dirty.	If the contact glass is dirty, clean the contact glass, and the bottom part of the shading plate.
3	CIS	Check that the lamp unit is contaminated with dusts.	If dusts are observed on the lamp unit, remove the dusts in the light paths.
4	ISU	Check whether the lens cover is hanged off.	Re-mount the lens cover if it is hanged off.

TONER
www.tonerplus.com.ua

	Defective part	Check description	Corrective Action
5	Shading plate	Check whether the shading plate is dirty.	If the shading plate is dirty, perform maintenance mode U063 to modify the shading position. If it does not cure, replace the contact glass assembly. (see page 1-3-28)
6	CIS	The CIS is defective.	Replace the CIS and perform U411. (see page 1-3-73)
7	Main/Engine PWB	The main/engine PWB is defective.	Replace the main/engine PWB.(see page 2-2-10)

TONER
www.tonerplus.com.ua

(6) Black streaks appear longitudinally.

Print example
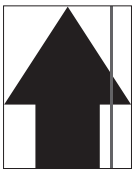

1. Table scanning

	Defective part	Check description	Corrective Action
1	Original document	Check whether the original document is dirty.	If the original document is dirty, replace.
2	Original document	Check if the size of the original document and its reference size match.	If the size of the original document and its reference size do not match, set the correct document size or activate border erasure.
3	Contact glass assy	Check the location the contact glass is mounted.	Re-mount the contact glass if it is hanged off.
4	Adjustment of the scanner	Check whether the outer areas of the original document have streaks or lines.	1. Perform maintenance mode U067, Front.(see page 1-3-32) 2. Perform maintenance mode U411, table (Chart1)_Input. (see page 1-3-73)
5	Contact glass	Check whether the outer areas of the original document have streaks or lines.	If the contact glass is dirty, clean.
6	CIS	Check that the CIS is contaminated with dusts.	If dusts are observed on the CIS, remove the dusts in the light paths.
7	Shading plate	Check whether the shading plate is dirty.	If the shading plate is dirty, perform maintenance mode U063 to modify the shading position. If it does not cure, replace the contact glass assembly. (see page 1-3-28)
8	CIS	The CIS is defective.	Replace the CIS and perform U411. (see page 1-3-73)
9	Main/Engine PWB	The main/engine PWB is defective.	Replace the main/engine PWB.(see page 2-2-10)

2. DP-scanning

	Defective part	Check description	Corrective Action
1	Original document	Check whether the original document is dirty.	If the original document is dirty, replace.

TONER www.tonerplus.com.ua

	Defective part	Check description	Corrective Action
2	Original document	Check if the size of the original document and its reference size match.	If the size of the original document and its reference size do not match, set the correct document size or activate border erasure.
3	Scanning position of the DP	Check whether the scanning position of the DP is wrong.	If the scanning position of the DP is shifted, perform maintenance mode U068, DP Read. (see page 1-3-33)
4	Adjustment of the scanner	Check whether the outer areas of the original document have streaks or lines.	1. Perform maintenance mode U067, Front.(see page 1-3-32) 2. Perform maintenance mode U411, table (Chart1)_Input. (see page 1-3-73)
5	Slit glass, Contact glass	Check whether the slit glass and contact glass are dirty.	If the slit glass and contact glass are dirty, clean the contact glass, the slit glass, the bottom part of the shading plate, and the conveying guide.
6	CIS	Check that the CIS is contaminated with dusts.	If dusts are observed on the CIS, remove the dusts in the light paths.
7	Shading plate	Check whether the shading plate is dirty.	If the shading plate is dirty, perform maintenance mode U063 to modify the shading position. If it does not cure, replace the contact glass assembly. (see page 1-3-28)
8	CIS	The CIS is defective.	Replace the CIS and perform U411. (see page 1-3-73)
9	Main/Engine PWB	The main/engine PWB is defective.	Replace the main/engine PWB.(see page 2-2-10)

TONER
www.tonerplus.com.ua

(7) Streaks are printed horizontally.

Print example
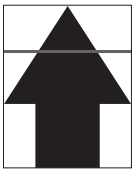

1. Table scanning

	Defective part	Check description	Corrective Action
1	Original document	Check whether the original document is dirty.	If the original document is dirty, replace.
2	Contact glass	Check whether the contact glass is dirty.	If the contact glass is dirty, clean the contact glass, and the bottom part of the shading plate.
3	Ajusting scanner	Check that the image at the back of the size indicator has been rendered.	1. If the image at the back of the size indicator, has been rendered perform maintenance mode U066, Front. (see page 1-3-31) 2. Perform maintenance mode U411, Table(Chart1)_Input.(see page 1-3-73)
4	FFC cable CIS	Check the FFC cable between the CIS and ISC PWB is properly connected. Or, verify conduction of the wire.	Reinsert the connector if its connection is loose. Or, if conduction is lot, replace the wire.
5	CIS	The CIS is defective.	Replace the CIS and perform U411. (see page 1-3-73)
6	Main/Engine PWB	The main/engine PWB is defective.	Replace the main/engine PWB.(see page 2-2-10)

2. DP-scanning

	Defective part	Check description	Corrective Action
1	Original document	Check whether the original document is dirty.	If the original document is dirty, replace.
2	Contact glass	Check whether the contact glass is dirty.	If the contact glass is dirty, clean the contact glass, and the bottom part of the shading plate.
3	FFC cable CIS	Check the FFC cable between the CIS and ISC PWB is properly connected. Or, verify conduction of the wire.	Reinsert the connector if its connection is loose. Or, if conduction is lot, replace the wire.
4	CIS	The CIS is defective.	Replace the CIS and perform U411. (see page 1-3-73)

TONER
www.tonerplus.com.ua

	Defective part	Check description	Corrective Action
5	Main/Engine PWB	The main/engine PWB is defective.	Replace the main/engine PWB.(see page 2-2-10)

TONER
www.tonerplus.com.ua

(8) One side of the print image is darker or brighter than the other.

Print example
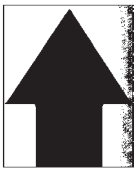

1. Table scanning

	Defective part	Check description	Corrective Action
1	Original document	Check whether the original document is dirty.	If the original document is dirty, replace.
2	Original document	Check if the original document has creases or foldings or wrinkles.	If the original document has foldings or creases, remove them.
3	Position of the mat of the platen	Check whether the position of the mat of the DP or the platen is wrong.	If the position of the mat of the DP or the platen is shifted, re-mount.
4	Contact glass	Check whether the contact glass is dirty.	If the contact glass is dirty, clean the contact glass, and the bottom part of the shading plate.
5	Contact glass assy	Check the location the contact glass is mounted.	If the light guide panel has been fallen off of the mounting position, fix it properly.
6	CIS carriage	Check that the contact part of the CIS carriage and the rail is distorted.	If the contact part of the CIS carriage and the rail is distorted, replace the CIS carriage.
7	CIS	The CIS is defective.	Replace the CIS and perform U411. (see page 1-3-73)
8	Main/Engine PWB	The main/engine PWB is defective.	Replace the main/engine PWB.(see page 2-2-10)

2. DP-scanning

	Defective part	Check description	Corrective Action
1	Original document	Check whether the original document is dirty.	If the original document is dirty, replace.
2	Original document	Check if the original document has creases or foldings or wrinkles.	If the original document has foldings or creases, remove them.
3	DP scanning guide	Check that the scanning guide is smoothly operative.	If the scanning guide does not rotate smoothly, re-install.

TONER
www.tonerplus.com.ua

	Defective part	Check description	Corrective Action
4	Contact glass	Check whether the contact glass is dirty.	If the contact glass is dirty, clean the contact glass, and the bottom part of the shading plate.
5	Contact glass assy	Check the location the contact glass is mounted.	Re-mount the contact glass if it is hanged off.
6	CIS	The CIS is defective.	Replace the CIS and perform U411. (see page 1-3-73)
7	Main/Engine PWB	The main/engine PWB is defective.	Replace the main/engine PWB.(see page 2-2-10)

TONER
www.tonerplus.com.ua

(9) Black dots appear on the image.

Print example
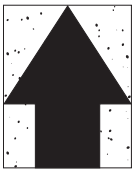

1. Table scanning

	Defective part	Check description	Corrective Action
1	Original document	Check whether the original document is dirty.	If the original document is dirty, replace.
2	Contact glass	Check whether the contact glass is dirty.	If the contact glass is dirty, clean the contact glass, and the bottom part of the shading plate.
3	FFC cable CIS	Check the FFC cable between the CIS and main/engine PWB is properly connected. Or, verify conduction of the wire.	Reinsert the connector if its connection is loose. Or, if conduction is lot, replace the wire.
4	Main/Engine PWB	The main/engine PWB is defective.	Replace the main/engine PWB.(see page 2-2-10)

2. DP-scanning

	Defective part	Check description	Corrective Action
1	Original document	Check whether the original document is dirty.	If the original document is dirty, replace.
2	Contact glass	Check whether the contact glass is dirty.	If the contact glass is dirty, clean the contact glass, and the bottom part of the shading plate.
3	FFC cable CIS	Check the FFC cable between the CIS and main/engine PWB is properly connected. Or, verify conduction of the wire.	Reinsert the connector if its connection is loose. Or, if conduction is lot, replace the wire.
4	Main/Engine PWB	The main/engine PWB is defective.	Replace the main/engine PWB.(see page 2-2-10)

TONER
www.tonerplus.com.ua

(10) Image is blurred.

Print example
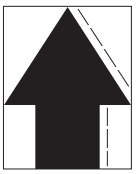

1. Table scanning

	Defective part	Check description	Corrective Action
1	Rail	Check that the carriage is smoothly operative.	If the carriage does not travel smoothly, remove foreign objects on the front and back optical rails.
2	Lamp unit	Check that the carriage is smoothly operative.	If the carriage does not travel smoothly because the lamp unit contacts with the frame, rectify.
3	Scanner drive belt	Confirm that a foreign object exists between the drive belt and the scanner drive pulleys.	If a foreign object exists, remove.
4	Drive belt	Confirm that the drive belt has a foreign object sticked or has a scuff.	If a foreign object exists on the drive belt, remove the foreign object. Or, if it is damaged, replace.

2. DP-scanning

	Defective part	Check description	Corrective Action
1	DP conveying pulley	Check that the conveying pulley is smoothly operative.	If the conveying pulley does not rotate smoothly, re-asslemble the conveying roller and springs.
2	Install DP	Check how DP is mounted on the main unit.	If mounting to the main unit is improper, check positioning and secure the screws.
3	DP hinge	Check that the DP hinge is operative in both ascending and descending directions and kept open.	If the DP is not operative smoothly or is not held stably open, replace the hinges.
4	DP document mat	Check the location the document mat of the DP is mounted.	Re-mount the document mat of the DP if it is hanged off.
5	Original document	Check that the leading edge of the original document is dog-eared.	If the leading edge of the original documet is dog-eared, straighten.
6	Scanning guide	Check if the scanning guide is distorted.	If the scanning guide deformed, replace.

TONER
www.tonerplus.com.ua

	Defective part	Check description	Corrective Action
7	Scopper guide	Check that the scopper guide is smoothly operative.	If the scopper guide does not rotate smoothly, re-install.
8	Conveying roller (before and after of scanning)	Check whether the conveying roller is dirty.	If the conveying roller is dirty, clean.
9	Drive belt	Check if the drive belt is jumping gear teeth.	If the drive belt is jumping gear teeth, re-mount the belt tensioner.

TONER
www.tonerplus.com.ua

(11) The leading edge of the image is consistently misaligned with the original.

Print example
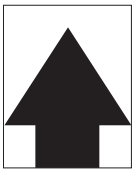

1. Table scanning

	Defective part	Check description	Corrective Action
1	Original document	Check if the original document is loaded correctly on the contact glass.	If the original document is not properly placed on the contact glass, place it correctly.
2	Secures the lamp unit	Confirm the oriention of the bracket that secures the wire rope and the lamp unit.	If the bracket that fixes the wire rope and the lamp unit is misaligned, align the bracket properly.
3	Adjustment of the scanner	Check the scanning adjustment of the scanner.	1. Perform maintenance mode U066, Front. (see page 1-3-31) 2. Perform maintenance mode U411, table(Chart1)_Input. (see page 1-3-73)
4	Home position sensor	Check the location the home position sensor is mounted.	Re-mount the home position sensor if it is hanged off.
5	Drive belt	Check if the tension of the drive belt is insufficient.	If the tension of the drive belt is insufficient, tense the belt.
6	Scanner drive pulley	Check if the scanner drive pulley is loosely fixed.	If the scanner drive pulley is loosely fixed, secure the screws.

2. DP-scanning

	Defective part	Check description	Corrective Action
1	Adjustment of the scanner	Check the scanning adjustment of DP scanning.	1. Perform maintenance mode U071, CIS Head. (see page 1-3-35) 2. Perform maintenance mode U411, FaceUp(Chart2)_Input. (see page 1-3-73)
2	Original conveying roller	Check if the conveyer roller is contaminated or worn.	If the conveying roller is dirty, clean the conveying roller and its axles.If the roller is worn out, replace.
3	DP drive motor	Check whether the DP drive motor is fluctuated in rotation.	If the DP motor is fluctuated in rotation, apply grease with the drive gear. If no improvement is observed, replace the motor.

TONER
www.tonerplus.com.ua

(12) Part of image is missing.

Print example


1. Table scanning

	Defective part	Check description	Corrective Action
1	Original document	Check if the original document is loaded correctly on the contact glass.	If the original document is not properly placed on the contact glass, place it correctly.
2	Original document	1. Check that the size of the original document and the paper size match on the panel. 2. Check that the copying position has been automatically rotated.	1. If the sizes of the original document and the paper size do not match, manually set the proper paper size for the original document. 2. Check the paper size automatic detection switch and replace if faulty. 3. If the copying position is automatically rotated, deactivate automatic image
3	Settings of Border removal	Check the value of border removal.	If a large value is given to bordere erasure, change it to a smaller value.
4	Contact glass	Check whether the contact glass is dirty.	If the contact glass is dirty, clean the contact glass, and the bottom part of the shading plate.
5	Contact glass assy	Check the location the contact glass is mounted.	Re-mount the contact glass if it is hanged off.
6	FFC cable CIS	Check the FFC cable between the CCD sensor and main/ engine PWB is properly con-nected. Or, verify conduction of the wire.	Reinsert the connector if its connection is loose. Or, if conduction is lot, replace the wire.
7	CIS assembly	Check the location the CIS assembly is mounted.	Re-mount the CIS assembly if it is hanged off.
8	CIS	The CIS is defective.	Replace the CIS and perform U411. (see page 1-3-73)
9	Main/Engine PWB	The main/engine PWB is defec-tive.	Replace the main/engine PWB.(see page 2-2-10)

TONER
www.tonerplus.com.ua

2. DP-scanning

	Defective part	Check description	Corrective Action
1	Original document	Check if the original document is loaded correctly in the DP.	If the original document is not properly placed in the DP, place it correctly.
2	Original document	1. Check that the size of the original document and the paper size match on the panel. 2. Check that the copying position has been automatically rotated.	1. If the sizes of the original document and the paper size do not match, manually set the proper paper size for the original document. 2. Check the paper size automatic detection switch and replace if faulty. 3. If the copying position is automatically rotated, deactivate automatic image rotation by the system menu.
3	Settings of Border removal	Check the value of border removal.	If a large value is given to bordere erasure, change it to a smaller value.
4	Contact glass	Check whether the contact glass is dirty.	If the contact glass is dirty, clean the contact glass, and the bottom part of the shading plate.
5	FFC cable CIS	Check the FFC cable between the CCD sensor and main/ engine PWB is properly con-nected. Or, verify conduction of the wire.	Reinsert the connector if its connection is loose. Or, if conduction is lot, replace the wire.
6	CIS	The CIS is defective.	Replace the CIS and perform U411. (see page 1-3-73)
7	Main/Engine PWB	The main/engine PWB is defec-tive.	Replace the main/engine PWB.(see page 2-2-10)

TONER
www.tonerplus.com.ua

(13) Image is out of focus.

Print example


1. Table scanning

	Defective part	Check description	Corrective Action
1	Original document	Check whether the original document is wavy.	If the original document is wavy, straighten.Or, replace the original document.
2	Contact glass	Check whether the contact glass is dew condensed.	If the contact glass is dew condensed, remove the dew.
3	Lens	Check whether the lens is dew condensed.	If the lens is dew condensed, remove the dew.
4	CIS	Check whether the CIS glass is dew condensed.	If the CIS glass is dew condensed, remove the dew.
5	Adjustment of the scanner	Check the automatic adjustment of the scanner.	Perform maintenance mode U411, table(Chart1)_All. (see page 1-3-73)
6	CIS	The CIS is defective.	Replace the CIS and perform U411. (see page 1-3-73)
7	Main/Engine PWB	The main/engine PWB is defec-tive.	Replace the main/engine PWB.(see page 2-2-10)

2. DP-scanning

	Defective part	Check description	Corrective Action
1	Original document	Check whether the original document is wavy.	If the original document is wavy, straighten.Or, replace the original document.
2	Contact glass	Check whether the contact glass is dew condensed.	If the contact glass is dew condensed, remove the dew.
3	Lens	Check whether the lens is dew condensed.	If the lens is dew condensed, remove the dew.
4	CIS	Check whether the CIS glass is dew condensed.	If the CIS glass is dew condensed, remove the dew.

TONER
www.tonerplus.com.ua

	Defective part	Check description	Corrective Action
5	Adjustment of the scanner	Check the automatic adjustment of the scanner.	Perform maintenance mode U411, table(Chart1)_All. (see page 1-3-73)
6	CIS	The CIS is defective.	Replace the CIS and perform U411. (see page 1-3-73)
7	Main/Engine PWB	The main/engine PWB is defective.	Replace the main/engine PWB.(see page 2-2-10)

TONER
www.tonerplus.com.ua

(14) Image center does not align with the original center.

Print example
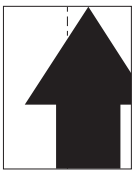

1. Table scanning

	Defective part	Check description	Corrective Action
1	Original document	Check if the original document is loaded correctly on the contact glass.	If the original document is not properly placed on the contact glass, place it correctly.
2	Contact glass assy	Check the location the contact glass is mounted.	Re-mount the contact glass if it is hanged off.
3	Adjustment of the scanner	Check the scanning adjustment of the scanner.	1. Perform maintenance mode U067, Front.(see page 1-3-32) 2. Perform maintenance mode U411, Table(Chart1)_Input. (see page 1-3-73)

2. DP-scanning

	Defective part	Check description	Corrective Action
1	Original document	Check if the original document is loaded correctly in the DP.	If the original document is not properly placed in the DP, place it correctly.
2	Adjustment of the scanner	Check the scanning adjustment of DP scanning.	1. Perform maintenance mode U072. 2. Perform maintenance mode U411, DP FaceUp(Chart2)_Input. (see page 1-3-73)

TONER
www.tonerplus.com.ua

(15) Moires

Print example
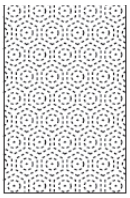

1. Table scanning

	Defective part	Check description	Corrective Action
1	Settings of print quality mode	Confirm whether the moire varies depending on print quality mode.	Switch print quality mode if the moire varies depending on print quality mode. 1. Execute printing in text or print mode. 2. Reduce the sharpness (to minus).
2	Original document	Check if moire is observed along the direction of scanning of the original document.	If moire is observed, place the original document after rotating it 90-degree.
3	Scaling factor	Happens with the zoom ratio of 100%.	Reduce the real-size ratio of the main scan direction by U065. (see page 1-3-29)
4	Adjustment of the scanner	Check the automatic adjustment of the scanner.	Perform maintenance mode U411, Table(Chart1)_All. (see page 1-3-73)

2. DP-scanning

	Defective part	Check description	Corrective Action
1	Settings of print quality mode	Confirm whether the moire varies depending on print quality mode.	Switch print quality mode if the moire varies depending on print quality mode. 1. Execute printing in text or print mode. 2. Reduce the sharpness (to minus).
2	Adjustment of the scanner	Check the automatic adjustment of the scanner.	Perform maintenance mode U411, Table(Chart1)_All. (see page 1-3-73)

TONER
www.tonerplus.com.ua

(16) Skewed image

Print example


1. Table scanning

	Defective part	Check description	Corrective Action
1	Original document	Check if the original document is fed askew.	If the original document is not placed askew on the contact glass, place it correctly.
2	Adjustment of height of main unit and scanner unit	Check the scanner unit is quite level.	If the scanner unit is not quite level, perform the height adjustment of the entirer scanner unit.
3	CIS assembly	Check the location the CIS assembly is mounted.	Re-mount the CIS assembly if it is hanged off.

2. DP-scanning

	Defective part	Check description	Corrective Action
1	Original document	Check if the original document has creases or foldings or wrinkles.	If the original document has foldings or creases, remove them.
2	DP paper feed	Check if the original document is fed askew.	If the original document is fed askew, set the width guides correctly.
3	CIS assembly	Check the location the CIS assembly is mounted.	Re-mount the CIS assembly if it is hanged off.
4	DP feed roller	Check whether the feed roller is dirty.	If the feed roller is dirty, clean.Or, if not cured, replace the feed roller.
5	DP regist roller	Check whether the DP regist roller is dirty.	If the DP regist roller is dirty, clean.
6	DP regist pulley	Check that the DP regist pulley is smoothly operative.	If the DP regist pulley does not rotate smoothly, re-install.
7	Adjustment amount of slack of the original documen	Check the amount of slack of the original document when it reaches at the regist.	If the amount of the slack of the original document roller improper is perform maintenance mode U942, DP slack settings.(see page 1-3-87)
8	Original document setting	Check that the cursor fits with the original document.	Align the cursor to fit with the original document, if necessary.

TONER
www.tonerplus.com.ua

	Defective part	Check description	Corrective Action
9	Adjustment positions of the hinge	Check the front and back adjustment positions of the right hinge.	If the front and back adjustment positions of the right hinge are improper, perform adjustment.

TONER
www.tonerplus.com.ua

(17) Abnormal image

Print example
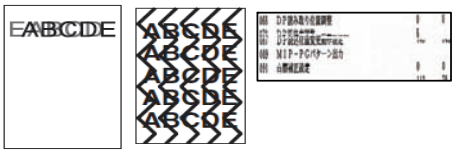

1. Table scanning

	Defective part	Check description	Corrective Action
1	FFC cable CIS	Check the FFC cable between the CIS and main/engine PWB is properly connected. Or, verify conduction of the wire.	Reinsert the connector if its connection is loose. Or, if conduction is lot, replace the wire.
2	CIS	The CIS is defective.	Replace the CIS and perform U411. (see page 1-3-73)
3	Main/Engine PWB	The main/engine PWB is defective.	Replace the main/engine PWB.(see page 2-2-10)

2. DP-scanning

	Defective part	Check description	Corrective Action
1	FFC cable CIS	Check the FFC cable between the CIS and main/engine PWB is properly connected. Or, verify conduction of the wire.	Reinsert the connector if its connection is loose. Or, if conduction is lot, replace the wire.
2	CIS	The CIS is defective.	Replace the CIS and perform U411. (see page 1-3-73)
3	Main/Engine PWB	The main/engine PWB is defective.	Replace the main/engine PWB.(see page 2-2-10)

TONER
www.tonerplus.com.ua

1-4-6 Poor image (Image rendering problems: printer engine

(1) No image appears (entirely white).

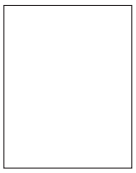

See page1-4-68

(2) No image appears (entirely black).

See page1-4-69

(3) Image is too light.

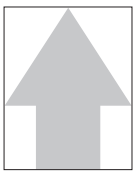

See page1-4-70

(4) The background is colored.

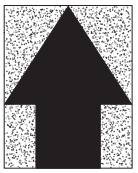

See page1-4-72

(5) White streaks are printed vertically.

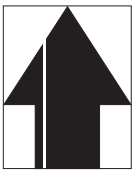

See page1-4-74

(6) Black streaks appear longitudinally.

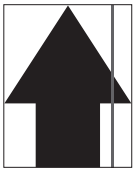

See page1-4-75

(7) Black or white streaks appear horizontally.

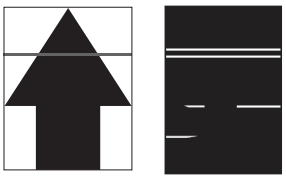

See page1-4-76

(8) Uneven density longitudinally.

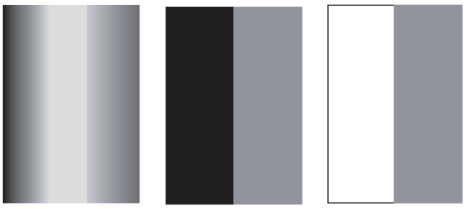

See page1-4-77

(9) Uneven density horizontally.

See page1-4-78

(10) Black dots appear on the image.

See page1-4-79

(11) Offset occurs.

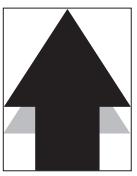

See page1-4-80

(12) Image is partly missing.

See page1-4-81

(13) Image is out of focus.

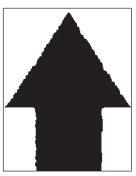

See page1-4-82

(14) Poor grayscale reproducibility.

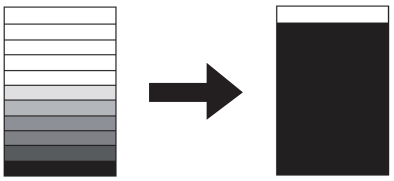

See page1-4-82

(15) Unevenly repeating horizontal streaks in the printed objects. Spots in the printed objects.

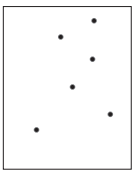

See page1-4-83

TONER
www.tonerplus.com.ua

(16) mage is blurred (Shifted transferring).

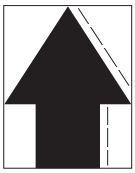

See page1-4-84

(17) The leading edge of the image is consistently misaligned with the original.

See page1-4-85

(18) The leading edge of the image is sporadically misaligned with the original.

See page1-4-86

(19) Paper is wrinkled.

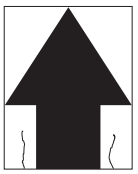

See page1-4-86

(20) Fusing is loose.

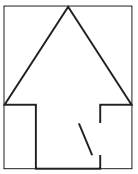

See page1-4-87

(21) Image center does not align with the original center.

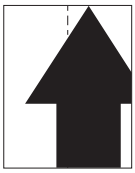

See page1-4-88

(22) Dirty paper edges with toner.

See page1-4-88

(23) Dirty reverse side of paper.

See page1-4-89

TONER
www.tonerplus.com.ua

(1) No image appears (entirely white).

Print example	Cause of trouble
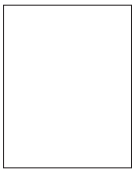	1. No or defective developing bias output. 2. Failure of the rotation of the developing roller. 3. Defective transfer. 4. Laser is not dispersed from the laser scanner unit (LSU). 5. The drum does not rotate.

	Defective part	Check description	Corrective Action
1	Developing unit	Executing U089 to generate PGs and check the following :	
		Check whether the developer drive gear is damaged.	If the gear is damaged, replace the developer unit.
		Check the developing roller is rotated by hand.	If the developer unit is in fault, replace the developer unit. (see page 1-5-36)
		Check contamination and deformation on the terminals of developer unit or the high-voltage PWB1.	If the connecting terminals are dirty, clean. If the connecting terminals are deformed, correct for a proper conduction.
2	High voltage PWB	Check the connection of the connector(s) and the high voltage PWB. Or, verify conduction of the wires.	Reinsert the connector if it its connection is loose. Replace the cable if it has no conduction. High voltage PWB (YC 1) and main/engine PWB (YC3)
		Check if developing bias value at its default by U140.	1. If the value obtaines by U140 does not conform to the default value, reset it to the default. (see page 1-3-49) 2. Replace the high-voltage PWB.
3	Transfer unit	Check if the right cover is closed.	If the right cover has not been closed, check how the conveying guide is locked and open the conveying guide once, then close.
4	Laser scanner unit (LSU)	Check the connection of the connectors. Or, verify conduction of the wires.	1. Reinsert the FFC wire if it its connection is loose. Replace the cable if it has no conduction. 2. Replace the LSU (see page 1-5-27)
5	Main/Engine PWB	A control signal is not derived from the main/engine PWB.	Replace the main/enging PWB. (see page 2-2-10)

TONER
www.tonerplus.com.ua

(2) No image appears (entirely black).

Print example	Cause of trouble
	1. No main charging. 2. The laser from the LSU is activated simultaneously.

	Defective part	Check description	Corrective Action
1	Charging roller	Check whether the charging roller is properly mounted.	If the charging roller is not fixed properly, fix the roller properly.
		Check whether the connecting terminals of the charging roller and high-voltage PWB are deformed.	If the connecting terminals are deformed, correct for a proper conduction.
2	High voltage PWB	Check the connection of the connectors. Or, verify conduction of the wires.	Reinsert the connector if its connection is loose. Replace the cable if it has no conduction. High voltage PWB (YC1) and main/engine PWB (YC3) :Charger
		Main charging current supplied by the high voltage PWB is faulty.	Replace the high voltage PWB. (see page 2-2-16)
3	Laser scanner unit (LSU)	Switching on and off the laser diode on the LSU PWB is out of control.	Replace the LSU. (see page 1-5-27)
4	Main/Engine PWB	The main/engine PWB is detective.	Replace the main/engine PWB.(see page 2-2-10)

TONER
www.tonerplus.com.ua

(3) Image is too light.

Print example	Cause of trouble
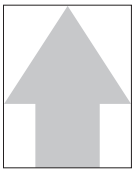	1. Variance in environments (dew formation). 2. Toner is under supplied, or deteriorated in quality.(Under charged) 3. The volatage of the developing bias is too low. 4. The volatage of the transfer current is too low. 5. The power of LSU laser is too low. 6. The surface potential of the drum is too high. 7. The contact pressure at the trasnfer roller and the drum is too low.

	Defective part	Check description	Corrective Action
1	Paper	Check that the paper has moisture absorbed. Check that the paper has stored in a humid place.	1. If the paper is damp, replace.Choose a dry place to store paper. 2. If necessary, install a cassette heater. (see page 1-2-25)
2	Drum unit	Check that the drum has dew condensation.	If a dew condensation is observed, perform drum refreshing. (System Menu >Adjustment / Maintenance)
		1. Check if the discharging lamp is dirty. 2. Check whether it is lit.	1. If the discharging lamp is dirty, clean. 2. If not cured, or it does not light, replace the drum unit.
3	Developer unit	Executing U089 to generate PGs and check the following : (see page 1-3-39)	
		1. Check if the device executed a low-density printing for a prolonged period.	If the device was executing a low-density printing for a prolonged period, perform developing refreshing. (System Menu >Adjustment / Maintenance)
		2. Check if the connecting terminals for developer bias are deformed.	If the connecting terminals are deformed, correct for a proper conduction.
4	Toner container	Shake the toner container up and down approx. 10 times, and check the following: 1. Check remaining toner by the indicator. 2. Check whether the toner supply inlet is open.	If the message prompting toner replenishing is shown, the toner inlet is not open, replace the toner container.
5	High voltage PWB	Check the value of the U100. Check the value of the U140.	1. If the value obtained by U100 or U140 does not conform to the default value, reset it to the default. (see page 1-3-42, 1-3-49) 2. Replace the high voltage PWB.

TONER
www.tonerplus.com.ua

	Defective part	Check description	Corrective Action
6	Transfer roller unit	Check whether the connecting terminals.	1. If the connecting terminals are deformed, correct for a proper conduction. 2. Replace transfer roller unit.
		1. Check if the contact between the transfer roller and durm is correct.	Re-mount the transfer roller.
7	LSU	1. The laser diode on the LSU APC PWB is out of control. 2. Check whether the internal mirrors are contaminated.	Replace the LSU. (see page 1-5-27)
8	Main/Engine PWB	The main/engine PWB is detective.	Replace the main/engine PWB.(see page 2-2-10)

TONER
www.tonerplus.com.ua

(4) The background is colored.

Print example	Cause of trouble
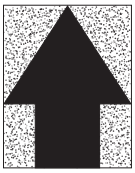	1. Toner is deteriorated in quality (under-charged). 2. Toner is over-supplied. 3. Developing bias is too high. 4. The layer of toner is too thick on the developing roller (too much toner). 5. The surface potential of the drum is too low (under low temperature environment).

	Defective part	Check description	Corrective Action
1	Developer unit	Executing U089 to generate PGs and check the following : (see page 1-3-39)	
		1. Check whether the device was being continuously operated with high density, under a hot environment.	If the device was being continuously operated with high density under a hot environment, perform developing refreshing. (System Menu >Adjustment / Maintenance)
		2. Check contamination and deformation on the connecting terminals for developer bias.	If the connecting terminals for developer bias are dirty, clean.If the connecting terminals are deformed, correct for a proper conduction.
2	Toner supply motor	Check the toner supply motor is continuously rotating.Check wires for shortcircuiting.	If the harnesses are short-circuited and the toner motor is continuously rotating, replace the toner supply motor.
3	Drum unit	1. Conduct U139 to check the internal temperature. (see page 1-3-48)	If the internal temperature is 16-degree C or less, continue printing until the temperature reaches 16-dgree C or higher.
		2. Check that the ground terminal is not contaminated or the conductive grease is not applied with the connecting terminals.	If the connecting terminals are dirty, clean. If the amount of the grease applied is too small, apply conductive grease to the bearing on the receiver side of the drum drive axle. Replace the drum unit. (Performs U119)
		3. Check if the charging roller is dirty.	If the charging roller is dirty, clean.Or replace it.

TONER
www.tonerplus.com.ua

	Defective part	Check description	Corrective Action
4	Transfer roller unit	1. Check if the roller is bleached on its surface. 2. Check the value of U140 MagDC after conducting calibration. 3. Check if the ground tab of the transfer roller unit is deformed.	1. If the connecting terminals are deformed, correct for a proper conduction. 2. Increase the U140 MagDC value if the U140 MagDC value has not reached at its maximum even though the roller is bleached on its surface. 3. If the MagDC increased to its maximum won't cure, replace the transfer roller unit. (see page 1-5-45)
5	High voltage PWB	The developing bias and charging current supplied by the high voltage PWB is faulty.	Replace the high voltage PWB. (see page 2-2-16)
6	Main/Engine PWB	The main/engine PWB is detective.	Replace the main/engine PWB.(see page 2-2-10)

TONER
www.tonerplus.com.ua

(5) White streaks are printed vertically.

Print example	Cause of trouble
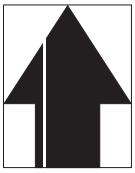	1. Dirty LSU slit glass. 2. Foreign objects inside the developer unit. 3. Internal contamination 4. Dirty drum inside.

	Defective part	Check description	Corrective Action
1	Developer unit	Executing U089 to generate PGs. (see page 1-3-39)	Replace the developer unit. (see page 1-5-36)
2	Light path between the LSU and the drum	Check if there are dusts, dirts, or toner obstructing the light paths.	If a foreign object exists on the frame or the sealings between the developer unit and the drum unit, remove.
3	Drum unit	Check if the charging roller is dirty.	If the charging roller is dirty,clean. Or replace it.
		Check if the discharging lamp is dirty.	If the discharging lamp is dirty,clean.
4	LSU	Check if the LSU slit glass is dirty.	If the LSU slit glass is dirty, perform laser scanner cleaning.
5	Transfer roller unit	Check whether a white streak occurs at the same position as the smear on the transfer roller.	Clean the transfer roller if it is dirty. Replace the drum unit. (see page 1-5-41)

TONER
www.tonerplus.com.ua

(6) Black streaks appear longitudinally.

Print example	Cause of trouble
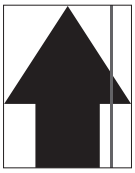	1. Dirty charging roller 2. Flawed or dirty drum unit 3. Damaged or paper dust bitten cleaning blade

	Defective part	Check description	Corrective Action
1	Separation brush	Check if the separation brush is dirty with paper dusts and waste toner.	If the separation brush is dirty, clean it using a brush.
2	Drum unit	Check if drum is dirty on its surface.	Execute drum refreshing. (System Menu >Adjustment / Maintenance)
		1. Check if the drum has scratches. 2. Check whether the edge of the cleaning blade is damaged. 3. Check whether it is abraded or paper dusts are accumulated. 4. Check whether toner is accumulated in the cleaning section.	Replace the drum unit. (see page 1-5-41)
3	Charging roller unit	Check if there is no toner streaks on the surface of the charging roller.	If the charging roller has streaks on its surface, clean the charging roller. Replace the charging roller, if necessary.
4	Transfer roller unit	1. Check if the transfer roller is contaminated on its surface or damaged.	If smears and scuff are observed on the transfer roller unit, replace the unit. (see page 1-5-45)
		2. Check the connecting terminals of high voltage are not dirty or deformed.	If the connector or terminals are dirty, clean. If the connecting terminals are deformed, correct for a proper conduction. Replace the high voltage PWB. (see page 2-2-16)
5	Fuser unit	Check if the paper separation puddle is contaminated with toner.	If the paper separation puddle is dirty, clean the paper separation puddle.
		Check the device is adjusted for a correct paper weight that matches the paper in use.	If the settings for paper weight and the paper being used do not match, make a proper configuration.
6	Eject guide	The Rib is contaminated with toner.	If it is duty,clean.

TONER
www.tonerplus.com.ua

(7) Black or white streaks appear horizontally.

Print example	Cause of trouble
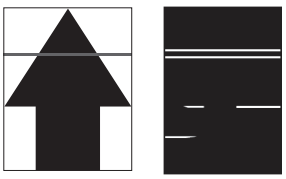	1. Dirty developer unit or terminals 2. Flawed or dirty drum unit Improper grounding 3. Dirty transfer roller terminals

	Defective part	Check description	Corrective Action
1	Developer unit	1. Check the print image on paper has a problem at an interval equivalent to the circumference of the developing roller. 2. Check that the developing roller is dirty at its ends or at the developing bias tab.	1. If the ends of the developing roller and the connecting terminals for developer bias are dirty, clean. 2. Replace the developer unit. (see page 1-5-36)
2	Drum unit	1. Check the print image on paper has a problem at an interval equivalent to the circumference of the drum .	Execute drum refreshing. (System Menu >Adjustment / Maintenance)
		2. Check if the drum has scratches.	Replace the drum unit. (see page 1-5-41)
		3. Check the grounding tab of the drum or the drum drive shaft.	1. Check how the drive unit is mounted, and correct, if necessary. 2. Replace the drum unit. (see page 1-5-41)
3	Transfer roller unit	Check the print image that implies dirt, deformation, or scratches on the transfer roller, which will be appearing at an interval equal to its circumference .	If the print image has a problem, clean the transfer roller by a soft cloth.
		Check contamination and deformation on the terminals .	1. If the connecting terminals are deformed, correct for a proper conduction 2. Replace transfer roller unit.(see page 1-5-45)
4	Fuser unit	Check the print image on paper has a problem at an interval equivalent to the circumference of the fuser roller.	If the print image has a problem, clean the fuser roller.
5	High voltage PWB	The bias voltage output supplied by the high voltage PWB is not even.	Replace the high voltage PWB. (see page 2-2-16)

TONER
www.tonerplus.com.ua

(8) Uneven density longitudinally.

Print example	Cause of trouble
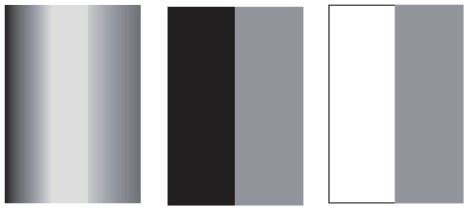	1. Dirty LSU inside 2. The transfer roller is not pressed against the drum properly. 3. Drum condensation.

	Defective part	Check description	Corrective Action
1	Transfer roller unit	Check that the transfer roller unit is properly fit.	1. If it is not fixed properly, fix it properly. 2. If the conveying unit has not been cloed, check how the conveying guide is locked and open the conveying guide once, then close. 3. Replace the transfer roller unit. (see page 1-5-45)
2	Drum unit	1. Check toner is evenly layered on its surface. 2. Check whether the device has been operated under a highly humid environment.	1. Execute drum refreshing. 2. Install a cassette heater. 3. Replace the drum unit. (see page 1-5-41)
3	Developer unit	Check that toner is evenly layered on the developer roller.	Replace the developer unit.. (see page 1-5-36)
4	LSU	The emission of laser dispersed from the LSU is not even. (Mirror is dropped off inside.)	Replace the LSU. (see page 1-5-27)

TONER
www.tonerplus.com.ua

(9) Uneven density horizontally.

Print example	Cause of trouble
	1. Defective laser scanner unit. 2. Improper charging roller rotation 3. Improper contact on the developer unit terminals

	Defective part	Check description	Corrective Action
1	LSU	Check the emission of laser is even.	Replace the LSU. (see page 1-5-27)
2	Charging roller	Check if the charing roller is improperly mounted.	1. Fix the charging roller properly. 2. Replace the charging roller. (see page 1-5-41)
3	Developer unit	Check If the connecting terminals of the developer bias is contaminated by toner.	1. If the connecting terminals is dirty. 2. Replace the developer unit. (Performs U140) (see page 1-5-36)
4	Transfer roller unit.	Check if the transfer roller is contaminated on its surface or damaged.	1. Replace the transfer roller unit.
		Check if the connecting terminals of high voltage are dirty or deformed.	1. If the connector or terminals are dirty, clean.If the connecting terminals are deformed, correct for a proper conduction. 2. Replace the high voltage PWB.
5	Fuser unit	Check that the roller, its driving unit, or the fusing pressure release mechanism is deformed, abraded, or damaged.	If the roller, its driving unit, or the fusing pressure release mechanism is deformed, abraded, or damaged, replace the fuser unit.

TONER
www.tonerplus.com.ua

(10) Black dots appear on the image.

Print example	Cause of trouble
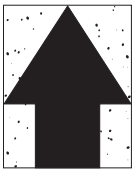	1. Dirty charging roller 2. Flawed or dirty drum unit 3. Damaged or paper dust bitten cleaning blade

	Defective part	Check description	Corrective Action
1	Drum unit	Check the print image on paper has a problem at an interval equivalent to the circumference of the drum (126mm).	If the drum has scratches, replace the drum unit. (see page 1-5-41)
2	Charging roller	Check the print image on paper has a problem at an interval equivalent to the circumference of the charging roller (38mm).	A problem is observed at a constant interval of the charging roller (38 mm), replace the charging roller. (see page 1-5-41)
3	Developer unit	1. Check if that the developing bias is leaked.	Execute AC calibration by U140. (see page 1-3-49)
		2. Check the print image on paper has a problem at an interval equivalent to the circumference of the developing roller (39mm).	1. If the print image on paper has a problem at an interval equivalent to the circumference of the developer roller, clean the developer unit. 2. Replace the developer unit. (see page 1-5-36)
4	Transfer roller unit.	Check if the transfer roller is contaminated on its surface or damaged.	Replace the transfer roller unit.
		Check the cleaning bias connector or the connecting terminals of high voltage are not dirty or deformed.	1. If the connector or terminals are dirty, clean.If the connecting terminals are deformed, correct for a proper conduction. 2. Replace the high-voltage circuit PWB.
5	Fuser unit	Check the print image on paper has a problem at an interval equivalent to the circumference of the fuser roller.	1. If the print image has a problem, clean the fuser roller. 2. If cleaning does not help improve the symptom, replace the fuser unit.

TONER
www.tonerplus.com.ua

(11) Offset occurs.

Print example	Cause of trouble
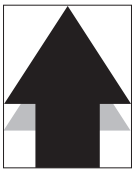	1. Flawed or dirty drum unit 2. Developing bias leakage.

	Defective part	Check description	Corrective Action
1	Paper	Check that the type of the paper used falls within the range of specifications. Check the settings of the type and weight of the paper.	1. If the type of the paper being used falls outside the requirements, replace and use a suitable type of paper. 2. If the settings made for the paper being used is inadequate, configure the settings according to the paper being used.
2	Drum unit	Check the print image on paper has a problem at an interval equivalent to the circumference of the drum (94 mm).	If the print image on paper has a problem at an interval equivalent to the circumference of the drum, replace the drum unit. (see page 1-5-41
3	Developer unit	Check if offsets are observed at an constant interval of 63 mm, which is equivalent to the circumference of the developing roller.	If offsets are observed at an constant interval of 39 mm, which is equivalent to the circumference of the developing roller, replace the developer unit. (Waste toner is not properly sweeped from the developing roller.) (see page 1-5-36)
4	Transfer roller unit	Check if offsets are occurred at a pitch of the outer circumference of the transfer roller. (50 mm)	If an offset happens at a pitch of the outer circumference, clean the transfer roller.
5	Fuser unit	Check the print image on paper has a problem at an interval equivalent to the circumference of the fuser roller.	If the fuser unit roller is dirty, replace the unit.
6	Fusing temperature setting	Check the fusing temperature value by U161. (see page 1-3-53)	If the fusing temperature value by U161 is not its default, reset it to the default.

TONER
www.tonerplus.com.ua

(12) Image is partly missing.

Print example	Cause of trouble
	1. Flawed or dirty drum unit. 2. Deformed or dirty transfer roller on its surface.

	Defective part	Check description	Corrective Action
1	Paper	1. Check that the paper has moisture absorbed. 2. Check that the paper has stored in a humid place.	1. If the paper is damp, replace.Choose a dry place to store paper. 2. If necessary, install a cassette heater. (see page 1-2-25)
2	Drum unit	Check the print image on paper has a problem at an interval equivalent to the circumference of the drum (94mm)	If the print image on paper has a problem at an interval equivalent to the circumference of the drum, exexcute drum refreshing (System Menu > Adjustment/Maintenance).
3	Transfer roller unit	Check if the transfer roller is deformed or contaiminated on its surface.	If the transfer roller unit is deformed or contaminated, replace the transfer roller unit.
4	Fusing temperature setting	Check the value of the U161. (see page 1-3-53)	1. Choose a paper weight appropriate for the weight of the paper actually being used, if the fusing temperature was set low using U161. 2. Perform U161 for an appropriate fusing temperature.

TONER
www.tonerplus.com.ua

(13) Image is out of focus.

Print example	Cause of trouble
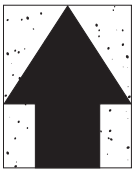	1. Drum condensation. 2. Dirty LSU slit glass.

	Defective part	Check description	Corrective Action
1	Paper	1. Check that the paper has moisture absorbed. 2. Check that the paper has stored in a humid place.	1. If the paper is damp, replace.Choose a dry place to store paper. 2. If necessary, install a cassette heater. (see page 1-2-25)
2	Drum unit	Check that the surface of the drum has dew condensation.	Execute Drum refreshing. System Menu > Adjustment/Maintenance
3	LSU	Check whether the LSU slit glass is contaminated in its entirety.	1. If the LSU slit glass is dirty, execute Laser scanner cleaning. 2. Replace the LSU. (see page 1-5-27)

(14) Poor grayscale reproducibility.

Print example	Cause of trouble
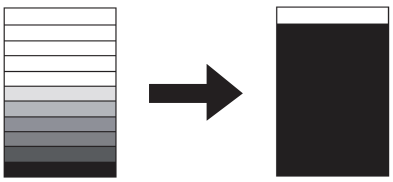	1. Poor image adjustment.

	Defective part	Check description	Corrective Action
1	Image adjustmen	Check if color adjustment is insufficient.	

TONER
www.tonerplus.com.ua

(15) Unevenly repeating horizontal streaks in the printed objects. Spots in the printed objects.

Print example	Cause of trouble
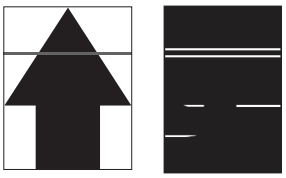	1. Installation at a high altitude. 2. Using the paper with high surface resistance.

	Defective part	Check description	Corrective Action
1	Developer unit	The device is installed in an altitude higher than 1500 m sea level.	If the device is installed in an altitude greater than 1500 m sea level, perform the following.
2	Paper	Check if paper is of high surface resistance.	Change the paper to another.

TONER
www.tonerplus.com.ua

(16) mage is blurred (Shifted transferring).

Print example	Cause of trouble
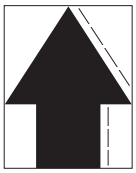	1. The paper used does not conform to the requirement. 2. Imbalanced fuser unit pressures.

	Defective part	Check description	Corrective Action
1	Paper	1. Check that the type of the paper used falls within the range of specifications. 2. Check the settings of the type and weight of the paper.	1. If the type of the paper being used falls outside the requirements, replace and use a suitable type of paper. 2. If the settings made for the paper being used is inadequate, configure the settings according to the paper being used.
2	Fuser unit	1. Check the fuser pressure balance. 2. Check if the fuser paper-inserting guide is deformed.	1. If the pressures at the front and rear are unbalanced, replace the fuser unit. (see page 1-5-49) 2. If the fuser unit is deformed, replace. (see page 1-5-49)
3	Paper conveying motor	Check to see if the driving mechanism for paper conveying is operative without a hinderance.	If the drive does not operate normally, apply grease.
4	Paper conveying guide	The paper conveying guide is deformed.	If the paper conveying guide is deformed, replace the paper conveying guide.

TONER
www.tonerplus.com.ua

(17) The leading edge of the image is consistently misaligned with the original.

Print example	Cause of trouble
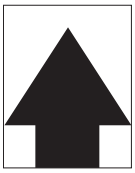	1. Improperly adjusted leading edge timing. 2. Improper amount of slack of the original document in front of the registration.

	Defective part	Check description	Corrective Action
1	Regist roller	1. Check whether the leading-edge timing is adequately adjusted.	If theadjustment is not sufficient, execute U034 to adjust the leading edge timing. (see page 1-3-22)
		2. Check whether the amount of slack of the original document when it reaches at the DP regist is adequate.	If the amount of the slack in front of the regist roller is insufficient, execute U051 to optimize the slack. (see page 1-3-26)

TONER
www.tonerplus.com.ua

(18) The leading edge of the image is sporadically misaligned with the original.

Print example
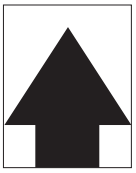

	Defective part	Check description	Corrective Action
1	Paper feed clutch, Registration clutch	Check that the clutches are properly fit.IOr, check they are operative without a hinderance.	1. If it is not fixed properly, fix it properly. 2. If it does not operate without a hinderance, replace the clutch.

(19) Paper is wrinkled.

Print example
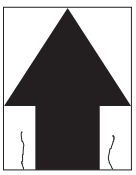

	Defective part	Check description	Corrective Action
1	Paper-width guides	Check the paper-width guides are flush with the paper.	If the width adjuster cursors are not flush with paper, set them correctly.
2	Paper	1. Check if paper is curled or wavy. 2. Check if paper is stored in a humid place.	1. If the paper is curled or wavy, replace. 2. Choose a dry place to store paper.
3	Regist roller	The pressures at the front and back springs are unbalanced.	Replace the spring with the one having a correct pressure.
4	Fuser unit	The pressuring spring of the fuser unit is defective.	Replace the fuser unit. (see page 1-5-49)

TONER
www.tonerplus.com.ua

(20) Fusing is loose.

Print example
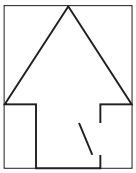

	Defective part	Check description	Corrective Action
1	Paper	1. Check that the type of the paper used falls within the range of specifications. 2. Check the settings of the type and weight of the paper.	1. If the type of the paper being used falls outside the requirements, replace and use a suitable type of paper. 2. If the settings made for the paper being used is inadequate, configure the settings according to the paper being used.
2	Paper weight setting	Check If the weight of the paper is correctly set.	If the weight of the paper is not correctly set, choose the correct weight that matches the paper being used.
3	Fuser unit	Check the fuser pressure setting.	Replace the fuser unit. (see page 1-5-49)
4	Fusing temperature setting	Check the value of the U161. (see page 1-3-53)	1. Choose a paper weight appropriate for the weight of the paper actually being used, if the fusing temperature was set low using U161. 2. Perform U161 for an appropriate fusing temperature.

TONER
www.tonerplus.com.ua

(21) Image center does not align with the original center.

Print example
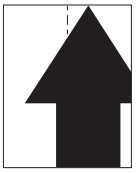

	Defective part	Check description	Corrective Action
1	Paper setting	Check if paper is set correctly.	Reload paper if the paper was not loaded correctly.
2	Image position adjustment	Excute U034 to check the center alignment during writing images.	Perform adjustment if the value of U034 Center Line Adjustment is inadequate. (see page 1-3-22)

(22) Dirty paper edges with toner.

Print example	Cause of trouble
	1. Toner scattering due to an internal temperature increase.(Developer unit)

	Defective part	Check description	Corrective Action
1	Conveying guide	Check if the conveying guide is dirty with toner.	If the conveying guide is dirty with toner, clean the developer unit and the cooling ducts.
2	Internal tempra-ture increase (Developer unit)	Check the device has been used for printing a large amount of data or for printing in duplex mode with a high density.	If the device has been used for printing a large amout of data or for printing in duplex mode with a high density, clean the developer unit.

TONER+
www.tonerplus.com.ua

(23) Dirty reverse side of paper.

Print example


	Defective part	Check description	Corrective Action
1	Conveying guide	Check if the conveying guide is dirty with toner.	If the conveying guide is dirty with toner, clean the conveying guide, the developer unit and the cooling ducts.
2	Fuser pressure roller	Check that a foreign object is stuck on the fuser pressure roller.	1. If a foreign object exists, clean the fuser pressure roller. 2. If the paper and the paper weight setting do not match, choose the proper paper weight setting.
3	Transfer roller unit	Check if the transfer roller is dirty with toner on its surface.	Clean the transfer roller.

TONER
www.tonerplus.com.ua

1-4-7 Electric problems

If the part causing the problem was not supplied, use the unit including the part for replacement.
Troubleshooting to each failure must be in the order of the numbered symptoms.

Problem	Causes	Check procedures/corrective measures
(1) The machine does not operate when the main power switch is turned on.	1. No electricity at the power outlet.	Measure the input voltage.
	2. The power cord is not plugged in properly.	Check the contact between the power plug and the outlet.
	3. Broken power cord.	Check for continuity. If none, replace the cord.
	4. Defective main power switch.	Check for continuity across the contacts. If none, replace the main power switch.
	5. Defective power source PWB.	Replace the power source PWB (see page 2-2-25).
	6. Defective main/ engine PWB.	Replace the main/engine PWB and check for correct operation (see page 2-2-10).
(2) Scanner motor does not operate.	1. Defective connector cable or poor contact in the connector.	Reinsert the connector. Also check for continuity within the connector cable. If none, replace the cable. Scanner motor and main/engine PWB (YC1)
	2. Defective drive transmission system.	Check if the gears rotate smoothly. If not, grease the bushes and gears. Check for broken gears and replace if any.
	3. Defective motor.	Replace the scanner motor.
	4. Defective PWB.	Replace the main/engine PWB and check for correct operation (see page 2-2-10).
(3) Duplex motor does not operate	1. Defective connector cable or poor contact in the connector.	Reinsert the connector. Also check for continuity within the connector cable. If none, replace the cable. Duplex motor and main/engine PWB (YC2)
	2. Defective drive transmission system.	Check if the rollers and gears rotate smoothly. If not, grease the bushes and gears. Check for broken gears and replace if any.
	3. Defective motor.	Replace the duplex motor.
	4. Defective PWB.	Replace the main/engine PWB and check for correct operation (see page 2-2-10).
(4) Toner motor does not operate.	1. Defective connector cable or poor contact in the connector.	Reinsert the connector. Also check for continuity within the connector cable. If none, replace the cable. Toner motor and main/engine PWB (YC12)
	2. Defective motor.	Replace the toner motor.
	3. Defective PWB.	Replace the main/engine PWB and check for correct operation (see page 2-2-10).

TONER
www.tonerplus.com.ua

Problem	Causes	Check procedures/corrective measures
(5) Eject fan motor does not operate.	1. Defective connector cable or poor contact in the connector.	Reinsert the connector. Also check for continuity within the connector cable. If none, replace the cable. Eject fan motor and main/engine PWB (YC11)
	2. Defective motor.	Replace the eject fan motor.
	3. Defective PWB.	Replace the main/engine PWB and check for correct operation (see page 2-2-10).
(6) Paper feed clutch does not operate.	1. Defective connector cable or poor contact in the connector.	Reinsert the connector. Also check for continuity within the connector cable. If none, replace the cable. Paper feed clutch and main/engine PWB (YC4)
	2. Defective clutch.	Replace the paper feed clutch.
	3. Defective PWB.	Replace the main/engine PWB and check for correct operation (see page 2-2-10).
(7) Registration clutch does not operate	1. Defective connector cable or poor contact in the connector.	Reinsert the connector. Also check for continuity within the connector cable. If none, replace the cable. Registration clutch and main/engine PWB (YC4)
	2. Defective clutch.	Replace the registration clutch.
	3. Defective PWB.	Replace the main/engine PWB and check for correct operation (see page 2-2-10).
(8) MP solenoid does not operate.	1. Defective connector cable or poor contact in the connector.	Reinsert the connector. Also check for continuity within the connector cable. If none, replace the cable. MP solenoid and main/engine PWB (YC4)
	2. Defective solenoid.	Replace the MP solenoid.
	3. Defective PWB.	Replace the main/engine PWB and check for correct operation (see page 2-2-10).
(9) The message requesting paper to be loaded is shown when paper is present on the cassette.	1. Defective connector cable or poor contact in the connector.	Reinsert the connector. Also check for continuity within the connector cable. If none, replace the cable. Paper sensor and main/engine PWB (YC5)
	2. Deformed actuator.	Check visually and replace if necessary.
	3. Defective sensor.	Replace the paper sensor.
	4. Defective PWB.	Replace the main/engine PWB and check for correct operation (see page 2-2-10).
(10) The message requesting paper to be loaded is shown when paper is present on the MP tray.	1. Defective connector cable or poor contact in the connector.	Reinsert the connector. Also check for continuity within the connector cable. If none, replace the cable. MP paper sensor and main/engine PWB (YC5)
	2. Deformed actuator.	Check visually and replace if necessary.
	3. Defective sensor.	Replace the MP paper sensor.
	4. Defective PWB.	Replace the main/engine PWB and check for correct operation (see page 2-2-10).

TONER
www.tonerplus.com.ua

Problem	Causes	Check procedures/corrective measures
(11) The size of paper on the cassette is not displayed correctly.	1. Defective connector cable or poor contact in the connector.	Reinsert the connector. Also check for continuity within the connector cable. If none, replace the cable. Paper length switch and main/engine PWB (YC5) Paper width switch and main/engine PWB (YC5)
	2. Defective switch.	Replace the paper length switch or paper width switch.
	3. Defective PWB.	Replace the main/engine PWB and check for correct operation (see page 2-2-10).
(12) A paper jam in the paper feed, paper conveying or eject section is indicated when the main power switch is turned on.	1. A piece of paper torn from paper is caught around registration sensor, fuser eject sensor	Check visually and remove it, if any.
	2. Defective sensor.	Replace the registration sensor or fuser eject sensor.
(13) A message indicating cover open is displayed when the front cover is closed.	1. Defective connector cable or poor contact in the connector.	Reinsert the connector. Also check for continuity within the connector cable. If none, replace the cable. Front cover switch and main/engine PWB (YC5)
	2. Defective switch.	Replace the front cover switch.
	3. Defective PWB.	Replace the main/engine PWB and check for correct operation (see page 2-2-10).
(14) A message indicating unit open is displayed when the right cover is closed.	1. Defective connector cable or poor contact in the connector.	Reinsert the connector. Also check for continuity within the connector cable. If none, replace the cable. Right cover switch and main/engine PWB (YC15,YC26)
	2. Defective switch.	Replace the right cover switch.

TONER
www.tonerplus.com.ua

1-4-8 Mechanical problems

If the part causing the problem was not supplied, use the unit including the part for replacement.

Problem	Causes/check procedures	Corrective measures
(1) No primary paper feed.	Check if the surfaces of the following rollers are dirty with paper powder. Pickup roller Paper feed roller MP paper feed roller	Clean with isopropyl alcohol.
	Check if the following rollers is deformed. Pickup roller Paper feed roller MP paper feed roller	Check visually and replace any deformed (see page 1-5-5, 1-5-14).
	Defective paper feed clutch or MP solenoid installation.	Check visually and remedy if necessary.
(2) No secondary paper feed.	Check if the surfaces of the following rollers are dirty with paper powder. Right registration roller Left registration roller	Clean with isopropyl alcohol.
	Defective registration clutch installation.	Check visually and remedy if necessary.
(3) Skewed paper feed.	Paper width guide in a cassette installed incorrectly.	Check the paper width guide visually and remedy or replace if necessary.
(4) Multiple sheets of paper are fed.	Check if the paper is excessively curled.	Change the paper.
	Paper is loaded incorrectly.	Load the paper correctly.
	Check if the separation pulley is worn.	Replace the separation pulley if it is worn (see page 1-5-8).
(5) Paper jams.	Check if the paper is excessively curled.	Change the paper.
	Check if the contact between the right and left registration rollers is correct.	Check visually and remedy if necessary.
	Check if the heat roller or press roller is extremely dirty or deformed.	Check visually and replace the fuser unit (see page 1-5-49).
(6) Toner drops on the paper conveying path.	Check if the drum unit or developer unit is extremely dirty.	Clean the drum unit or developer unit.
(7) Abnormal noise is heard.	Check if the rollers, pulleys and gears operate smoothly.	Grease the bushes and gears.
	Check if the following clutches are installed correctly. Paper feed clutch Registration clutch	Check visually and remedy if necessary.

TONER
www.tonerplus.com.ua

This page is intentionally left blank.

TONER
www.tonerplus.com.ua

1-5-1 Precautions for assembly and disassembly

(1) Precautions

Before starting disassembly, press the Power key on the operation panel to off. Make sure that the Power lamp is off before turning off the main power switch. Unplug the power cable from the wall outlet.
When the fax kit is installed, be sure to disconnect the modular code before starting disassembly.
When handling PWBs (printed wiring boards), do not touch parts with bare hands.
The PWBs are susceptible to static charge.
Do not touch any PWB containing ICs with bare hands or any object prone to static charge.
When removing the hook of the connector, be sure to release the hook.
Take care not to get the cables caught.
To reassemble the parts, use the original screws. If the types and the sizes of screws are not known, refer to the PARTS LIST.

(2) Drum unit

Note the following when handling or storing the drum unit.
When removing the drum unit, never expose the drum surface to strong direct light.
Keep the drum unit at an ambient temperature between -20°C/-4°F and 40°C/104°F and at a relative humidity not higher than 85% RH. Avoid abrupt changes in temperature and humidity.
Avoid exposure to any substance which is harmful to or may affect the quality of the drum unit.
Do not touch the drum surface with any object. Should it be touched by hands or stained with oil, clean it.

(3) Toner

Store the toner container in a cool, dark place.
Avoid direct light and high humidity.

TONER
www.tonerplus.com.ua

(4) How to tell a genuine Kyocera toner container

As a means of brand protection, the Kyocera toner container utilizes an optical security technology to enable visual validation. A validation viewer is required to accomplish this.

Hold the validation viewer over the left side part of the brand protection seal on the toner container. Through each window of the validation viewer, the left side part of the seal should be seen as follows:

A black-colored band when seen through the left side window (●)

A shiny or gold-colored band when seen through the right side window (☼)

The above will reveal that the toner container is a genuine Kyocera branded toner container, otherwise, it is a counterfeit.

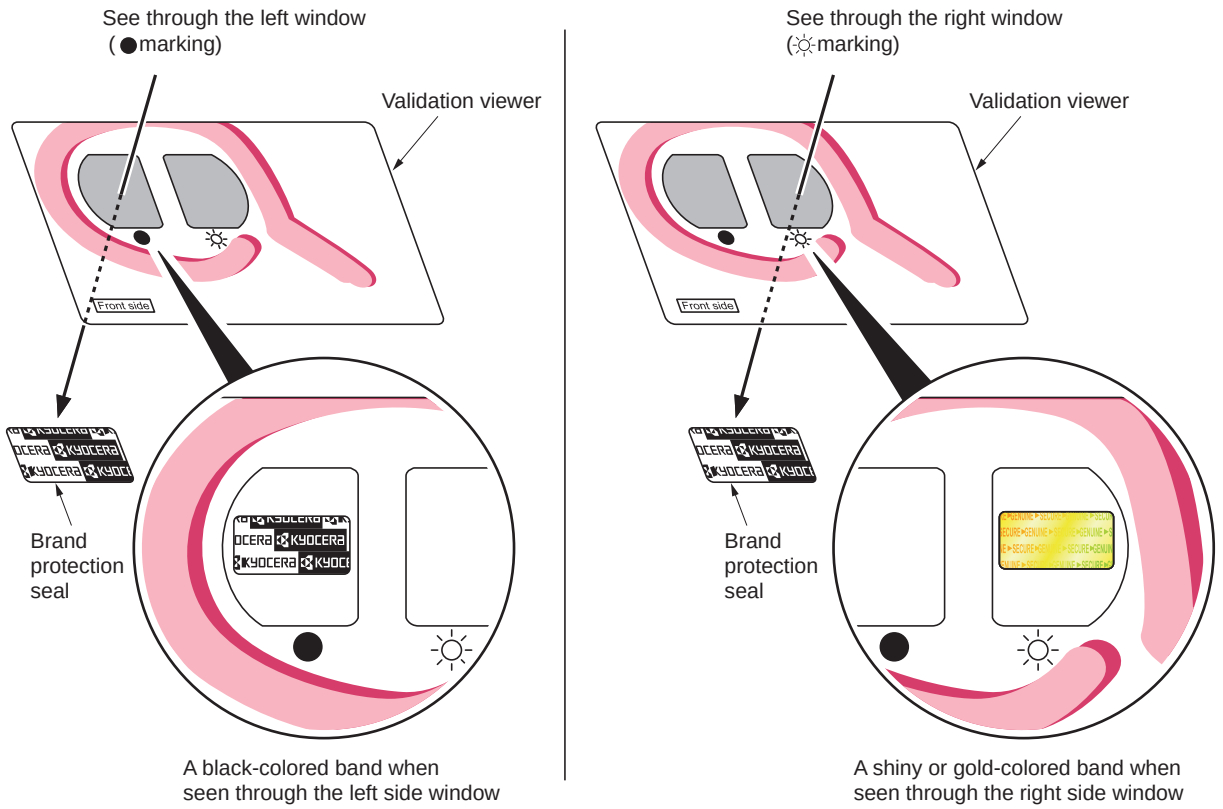

Figure 1-5-1

The brand protection seal has an incision as shown below to prohibit reuse.

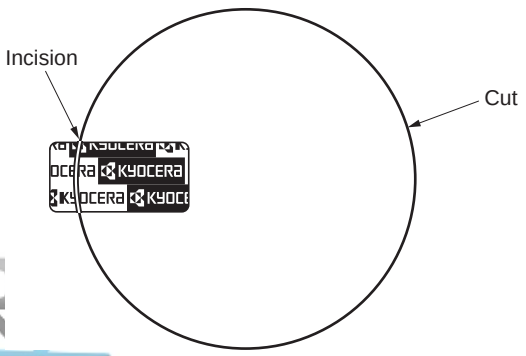

Figure 1-5-2

TONER
www.tonerplus.com.ua

1-5-2 Paper feed / conveying section

Paper feed/conveying section consists of the paper feed unit that feeds paper from the cassette and the MP tray paper feed unit that feeds paper from the MP tray, and the paper conveying section that conveys the fed paper to the transfer/separation section.

(1) Cassette paper feed section

The cassette can contain 300 sheets. The sheet from the cassette is pulled out by rotation of the pickup roller and sent to the paper conveying section by rotation of the paper feed roller. Also the retard roller prevents multiple feeding of paper.

[Component formation]

1. Paper feed roller
2. Pickup roller
3. Feed holder
4. Retard roller
5. Retard holder
6. Friction pad
7. Bottom plate
8. Paper width guide
9. Paper length guide
10. Cassette base
11. Actuator (paper sensor)

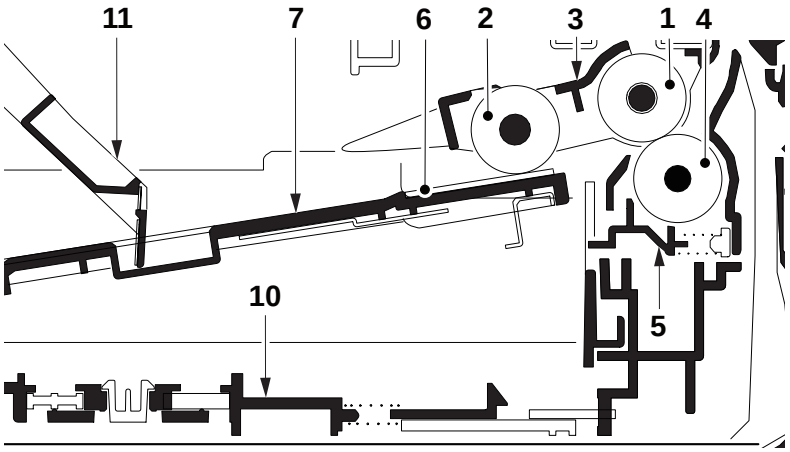

Figure 1-5-3

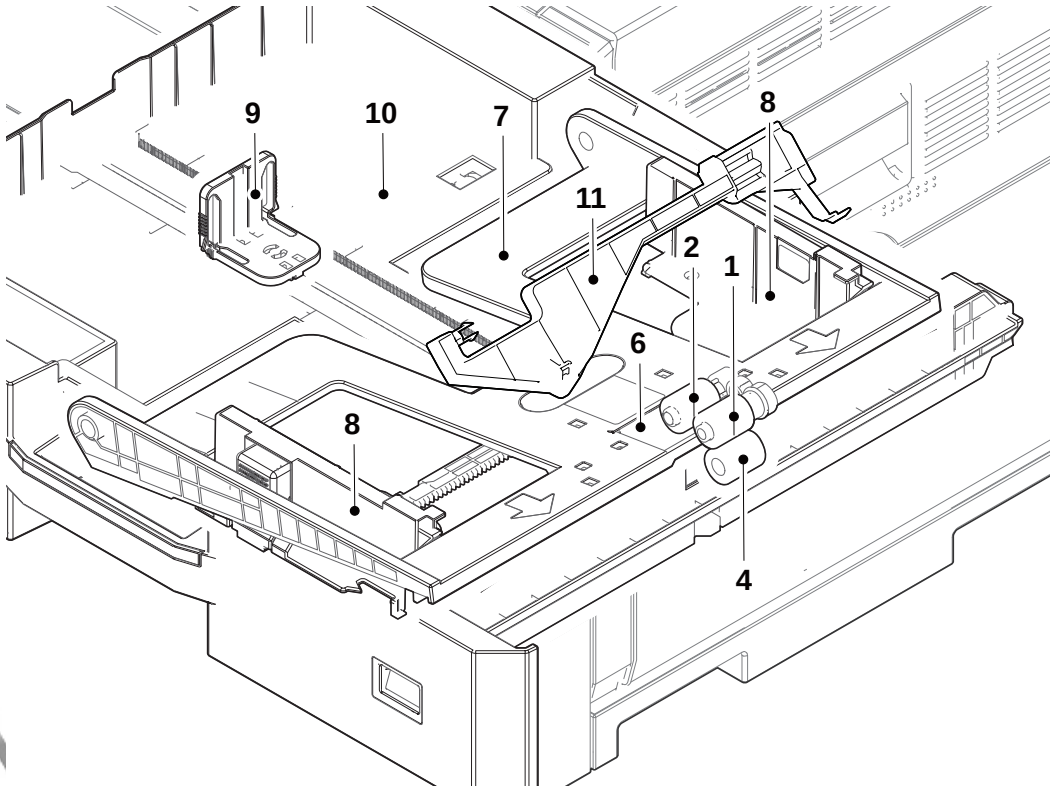

Figure 1-5-4

TON
www.tonerplus.com.ua

[Control block diagram]

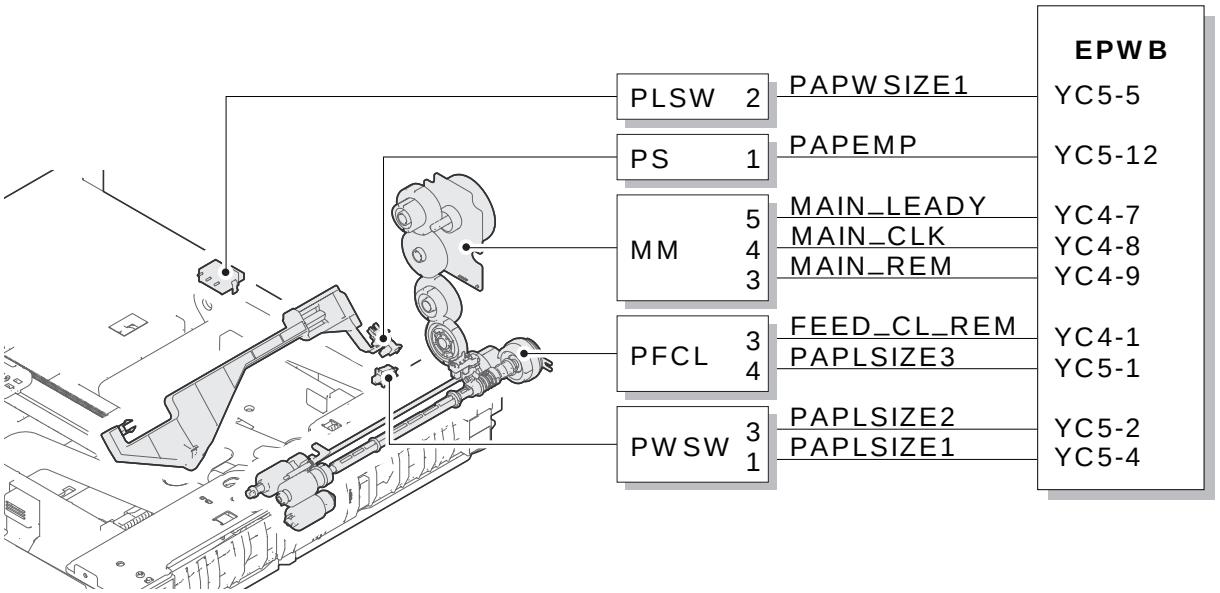

Figure 1-5-5

TONER
www.tonerplus.com.ua

(1-1) Detaching and refitting the primary paper feed unit and the pickup roller

Procedure

1. Remove the cassette by pulling out forward from main unit.

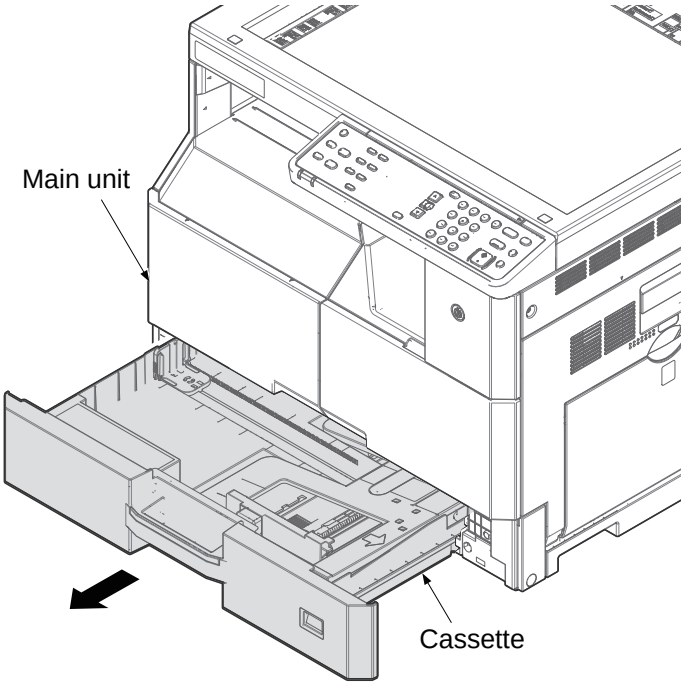

Figure 1-5-6

2. Remove the screw.
3. emove the cassette by pulling out forward from main unit.

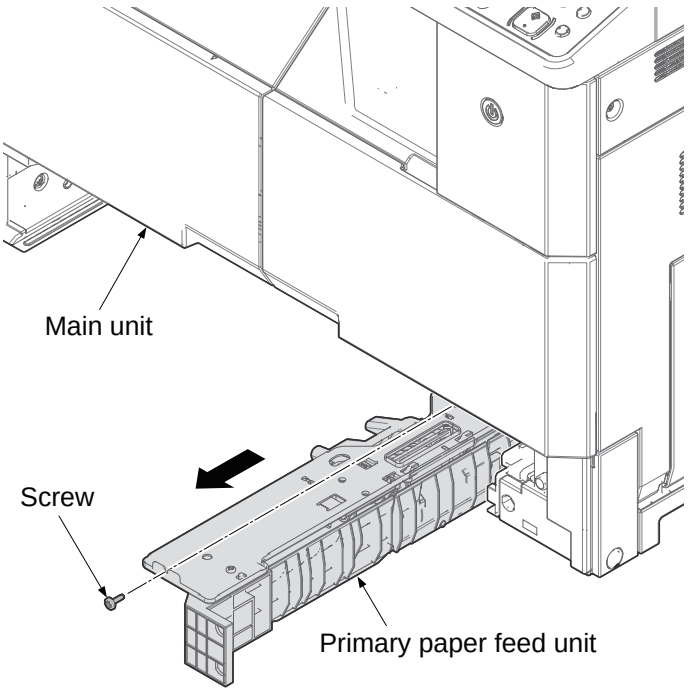

Figure 1-5-7

TONER
www.tonerplus.com.ua

4. Remove two screws.
5. Remove the top paper feed assembly from the lower paper feed assembly of the primary paper feed unit.

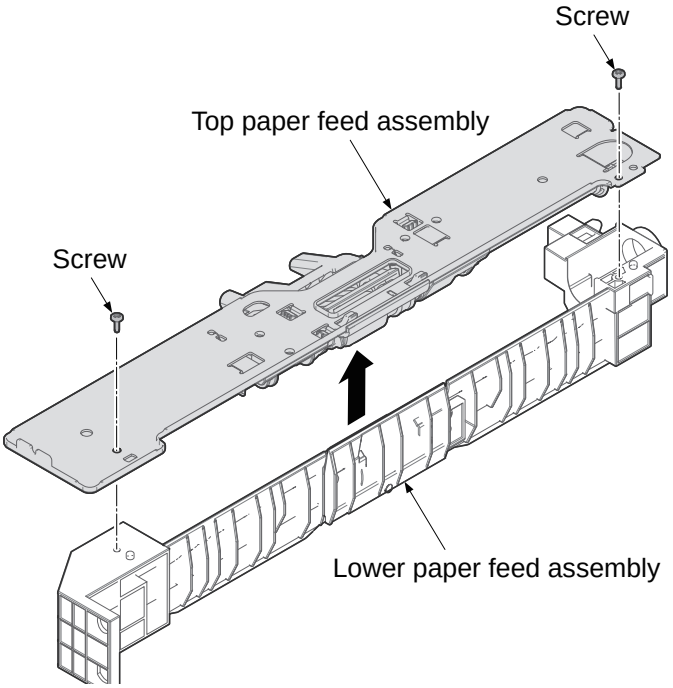

Figure 1-5-8

6. Reverse the top paper feed assembly.
7. Remove the hook of spring useing long-nose pliers from the attachment hole of a feed holder.

*: Be careful not to fly spring, when working.

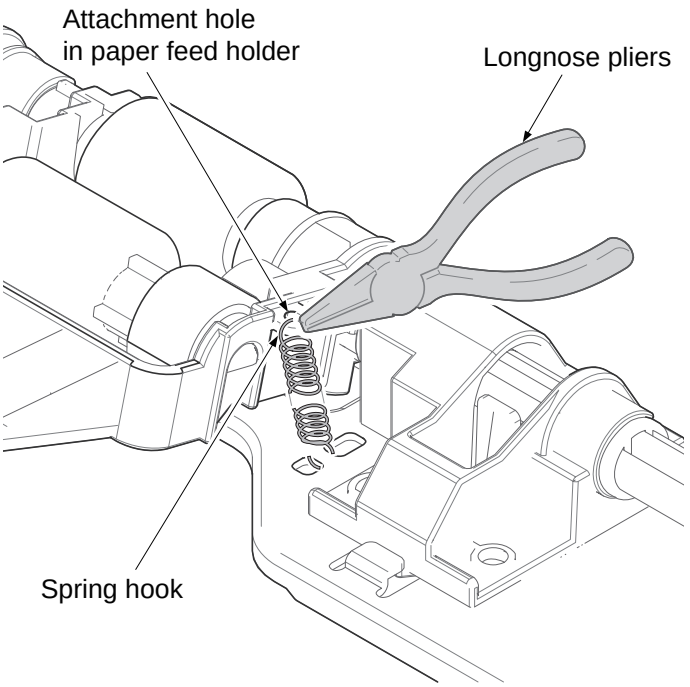

Figure 1-5-9

TONER
www.tonerplus.com.ua

8. Release the lock lever by a finger and slide the paper feed driving shaft.
9. Remove the paper feed holder by sliding after it turned upward.

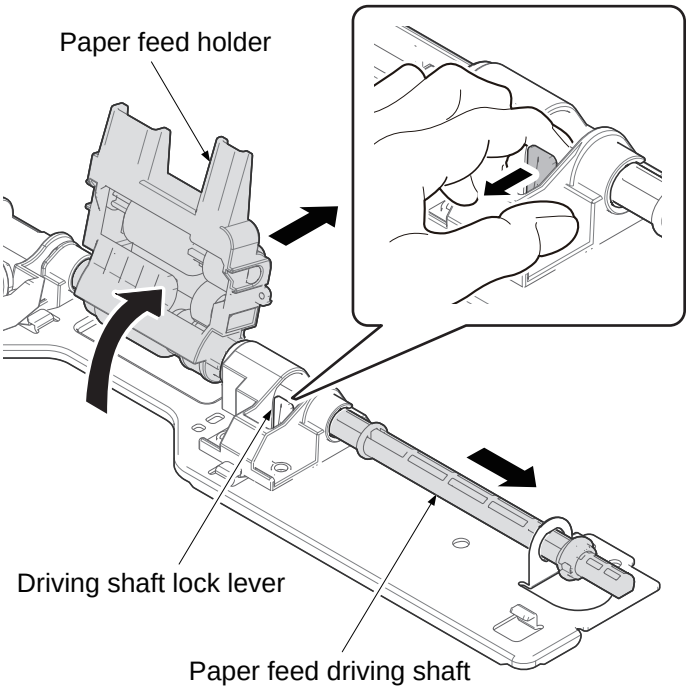

Figure 1-5-10

10. Remove the paper feed roller by pulling out the paper feed roller shaft from the paper feed holder.
11. Remove upward the pickup roller shaft by bending the paper feed holder.
12. Remove the pickup roller by pulling out the pickup roller shaft.
13. Check or replace the paper feed roller and the pickup roller and refit all the removed parts.

14. When replacing the new unit,proceed as follows:
    1)Performs maintenance mode U901 (Clr Paper FD Cnt) (see page 1-3-79).

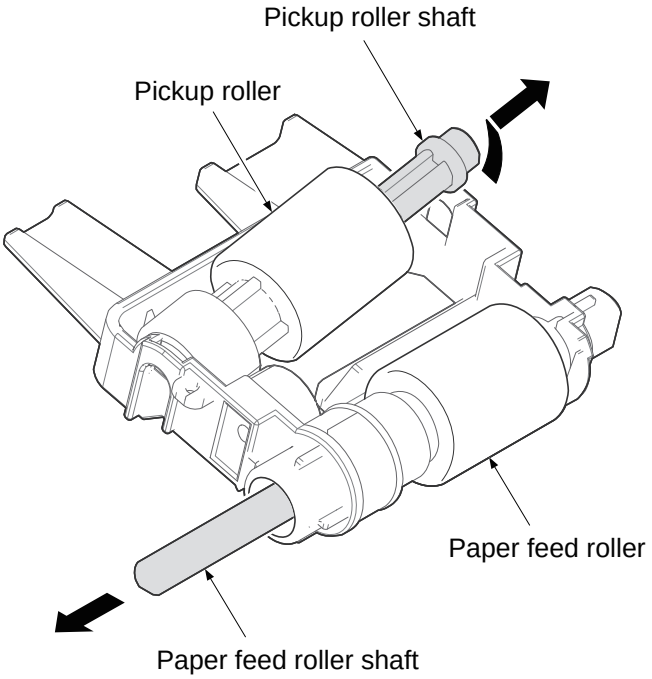

Figure 1-5-11

TONER
www.tonerplus.com.ua

(1-2) Detaching and refitting the retard roller

Procedure

1. Remove two screws from the lower paper feed assembly.

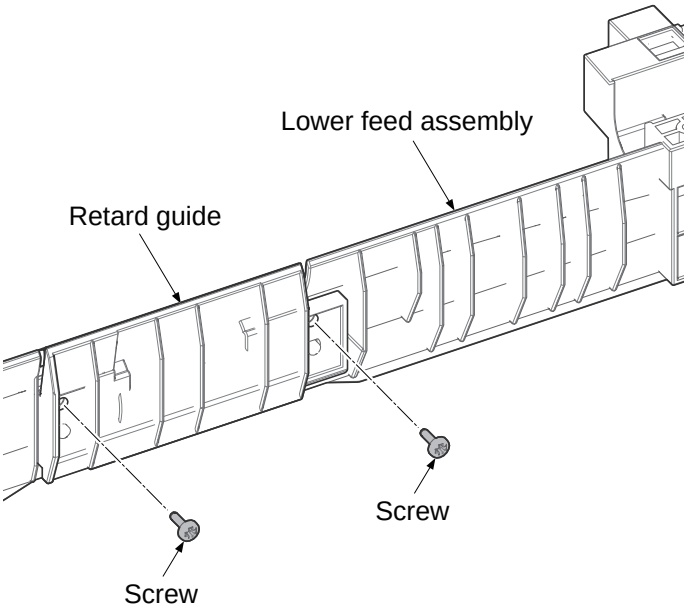

Figure 1-5-12

2. Release the hook in two square holes of the retard guide using flat screw driver.
3. Remove the retard guide.

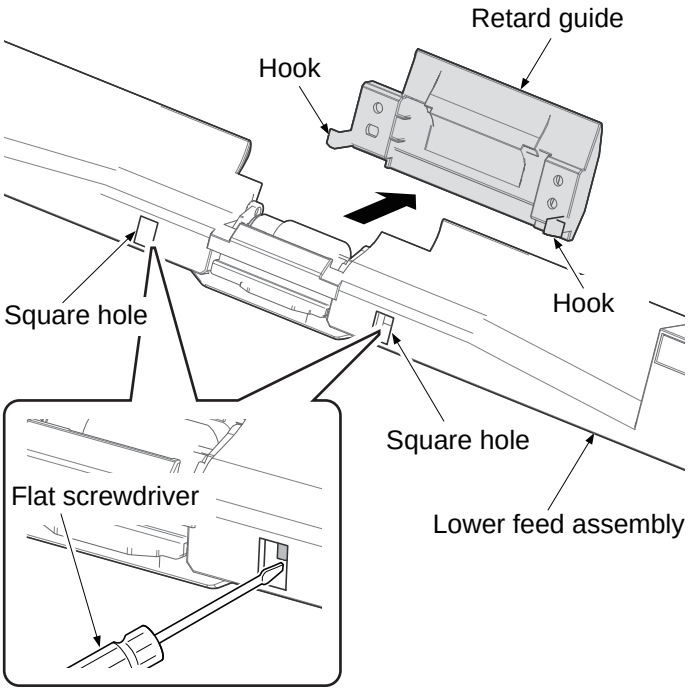

Figure 1-5-13

TONER
www.tonerplus.com.ua

4. Remove the retard holder and the retard roller by bending to inside the fulcrum part of the retard holder.
*: Be careful not to skip a spring.
5. Check or replace the retard roller and refit all the removed parts.

6. When replacing the new unit,proceed as follows:
   1)Performs maintenance mode U901 (Clr Paper FD Cnt) (see page 1-3-79).

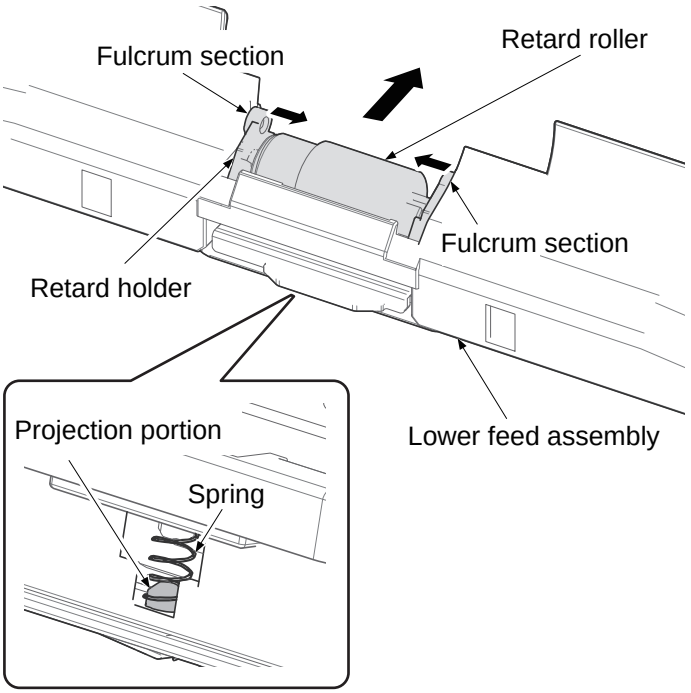

Figure 1-5-14

TONER
www.tonerplus.com.ua

(1-3) Detaching and refitting the registration cleaner

Procedure

1. Open the front cover.

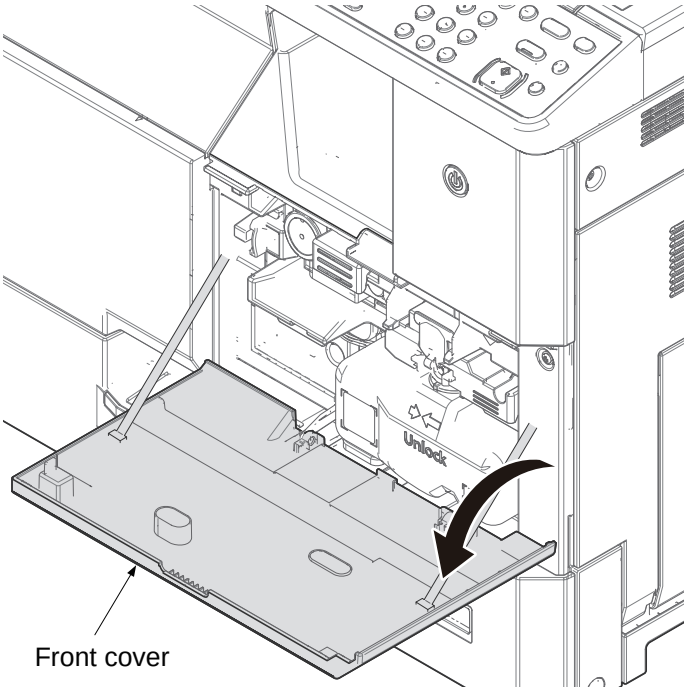

Figure 1-5-15

2. Release it by pinching the lock lever and then remove the waste toner box forward.

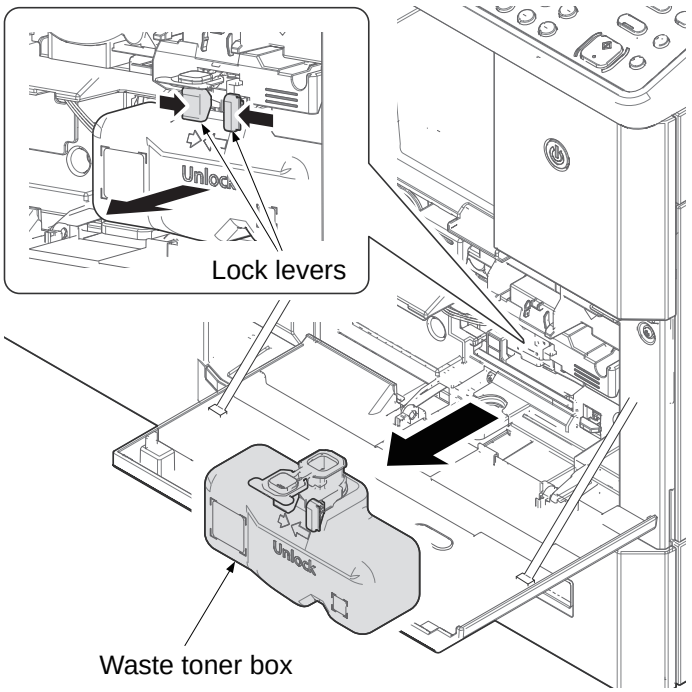

Figure 1-5-16

TONER
www.tonerplus.com.ua

3. Pull out the registration roller cleaner by picking up the knob.
*: Pull out calmly not to scatter paper powder over the circumference.
4. Check or replace the registration roller cleaner and refit all the removed parts.

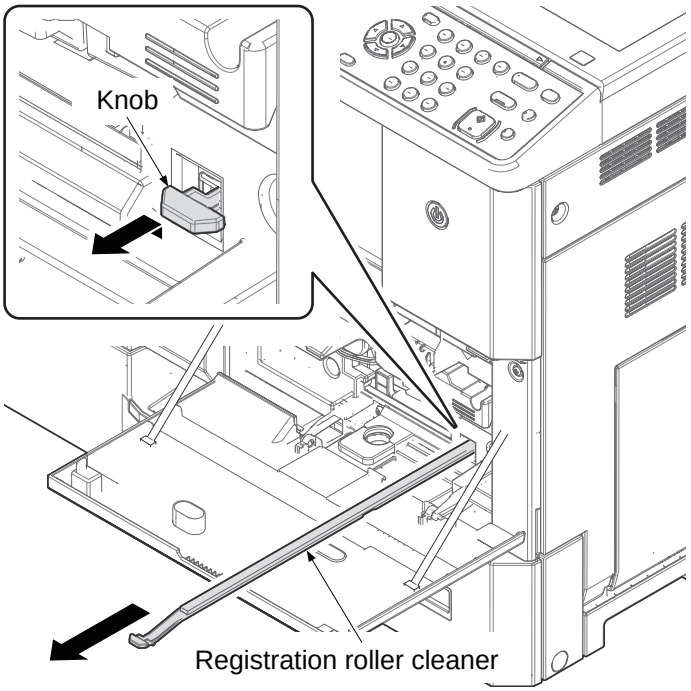

Figure 1-5-17

TONER
www.tonerplus.com.ua

(2) MP tray paper feed section

The MP tray can contain 100 sheets. Feeding from the MP tray is performed by the rotation of the MP paper feed roller. Also, function of the MP separation pad prevents paper from multiple feeding.

[Component formation]

1. MP paper feed roller
2. MP separation pad
3. MP bottom plate
4. MP (multi purpose)tray
5. MP frame
6. MP paper width guide

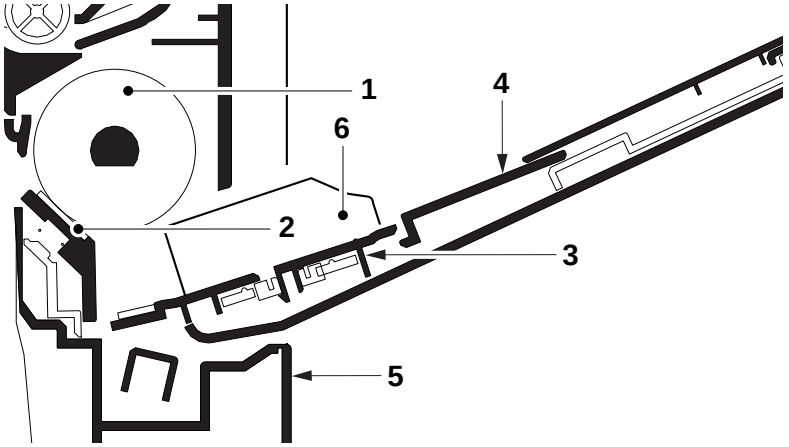

Figure 1-5-18

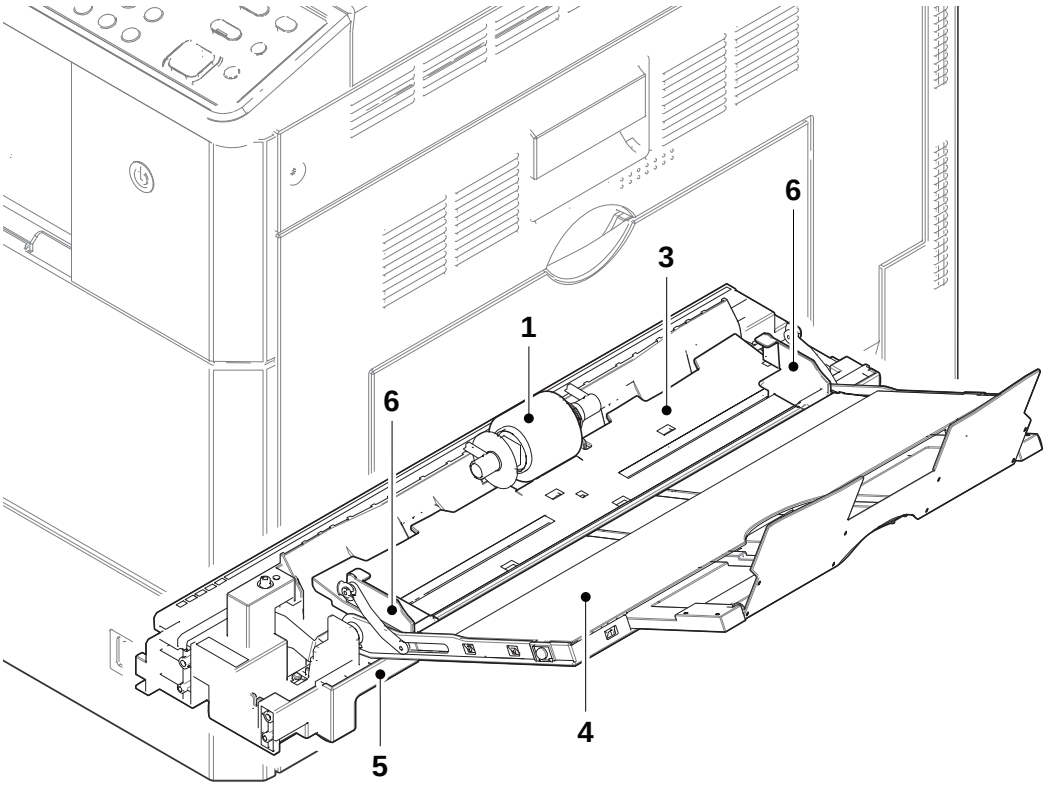

Figure 1-5-19

TONER
www.tonerplus.com.ua

[Control block diagram]

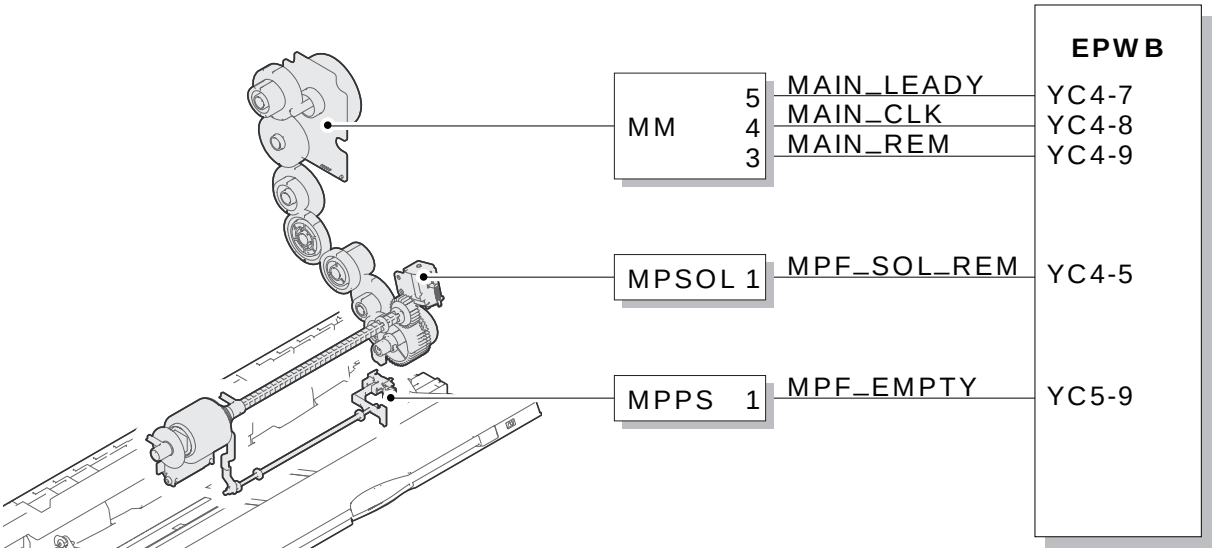

Figure 1-5-20

TONER
www.tonerplus.com.ua

(2-1) Detaching and refitting the MP paper feed roller

Procedure

1. Open the right cover.
2. Slide the MP paper feed roller and then remove it upward.
3. Check or replace the MP paper feed roller and refit all the removed parts.

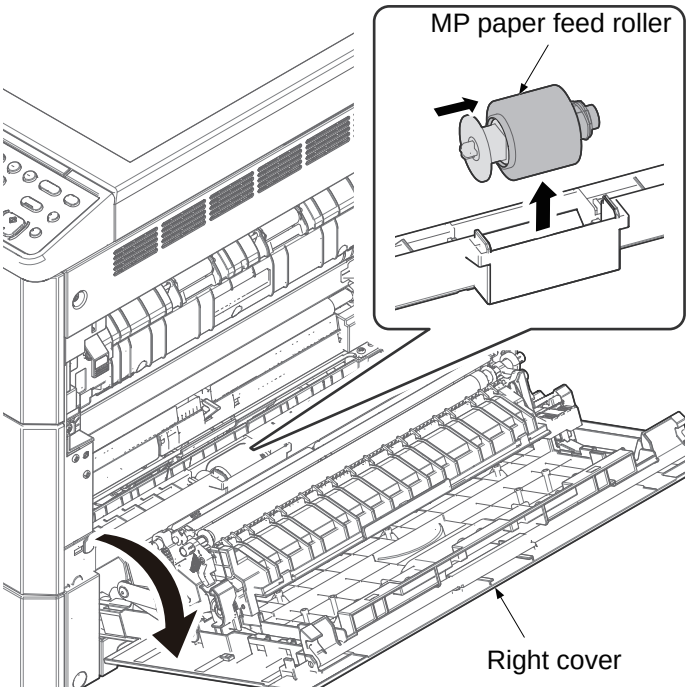

Figure 1-5-21

TONER
www.tonerplus.com.ua

1-5-3 Optical section

The optical section consists of the image scanner section for scanning and the laser scanner section for printing.

(1) Image scanner section

The original image is illuminated by the exposure lamp (EL) and scanned by the CIS, the reflected light being converted to an electrical signal.

If a document processor is used, the image scanner unit stops at the position of the DP contact glass and scans sequentially one row of the image on the original in synchronization with the moving timing of the original in the sub scan direction by driving the DP.

[Component formation]

1. CIS
2. CIS carrige
3. ISU frame
4. Contact glass
5. Original size indicator plate
6. DP contact glass

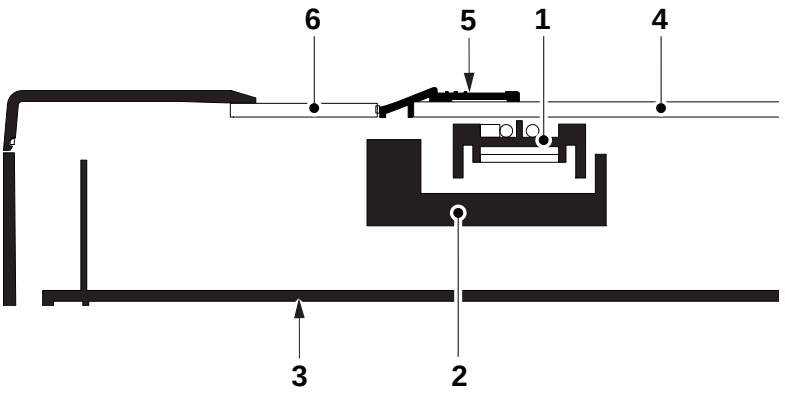

Figure 1-5-22

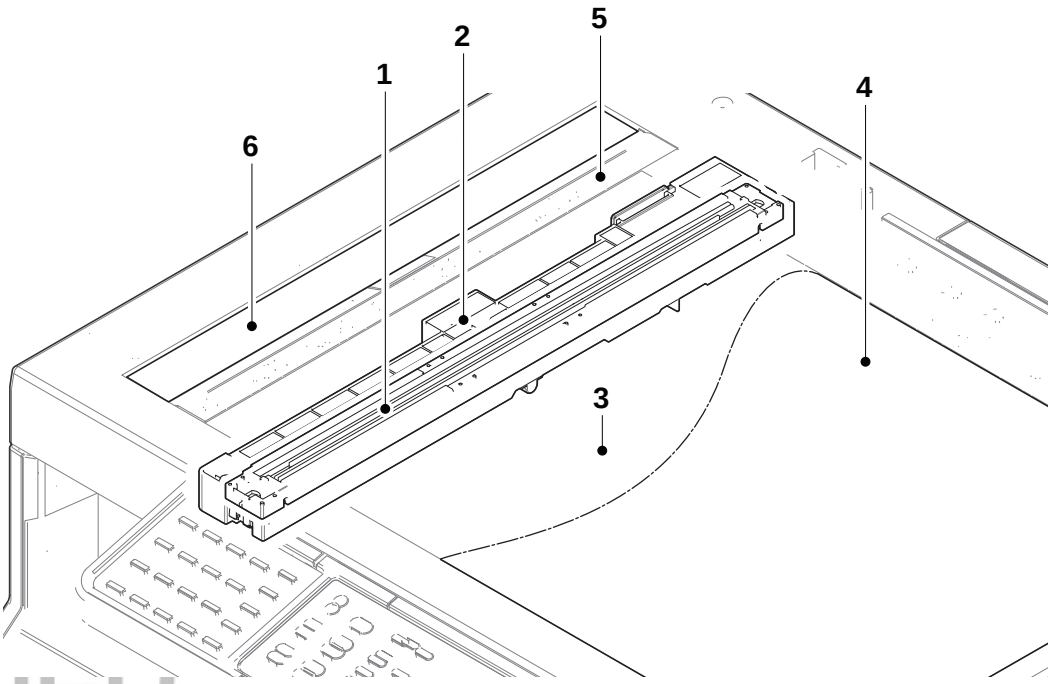

Figure 1-5-23

TONER
www.tonerplus.com.ua

[Control block diagram]

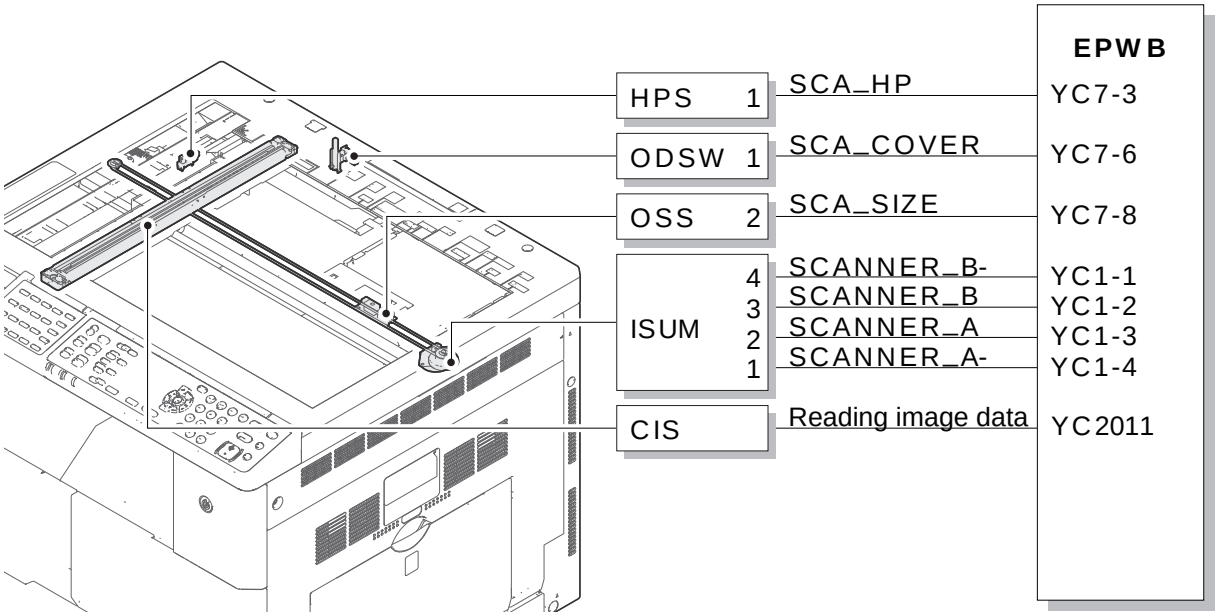

Figure 1-5-24

TONER
www.tonerplus.com.ua

(1-1) Detaching and refitting the exposure lamp

Procedure

1. Raise the operation panel cover A using a flat screw driver and then remove it by sliding.
2. Raise the operation panel cover B using a flat screw driver and then remove it by sliding.

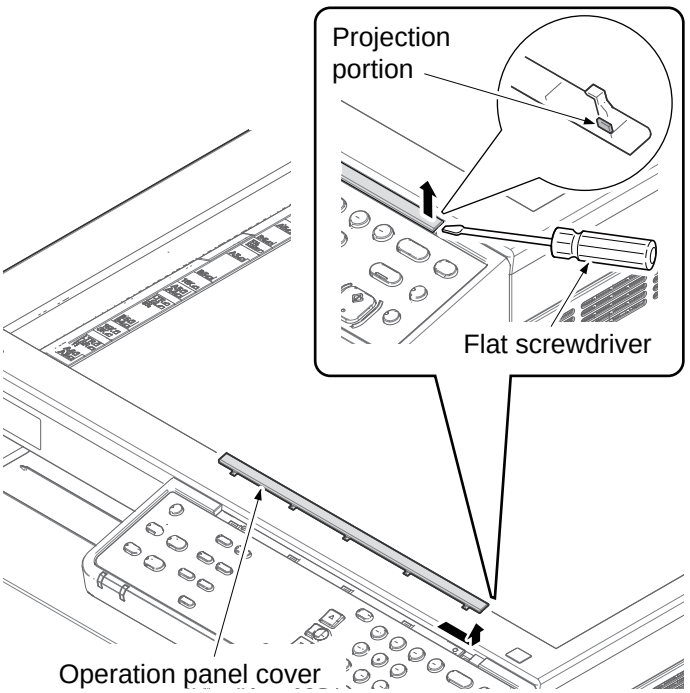

Figure 1-5-25

3. Remove the clear panel.
4. Remove the operation panel sheet.

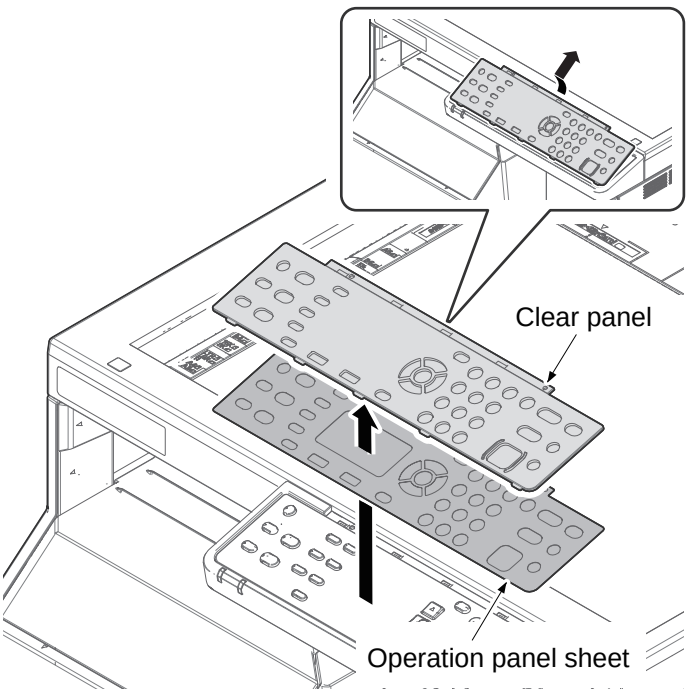

Figure 1-5-26

TONER
www.tonerplus.com.ua

5. Remove two screws.
6. Release four hooks and then remove the operation panel assembly upward.

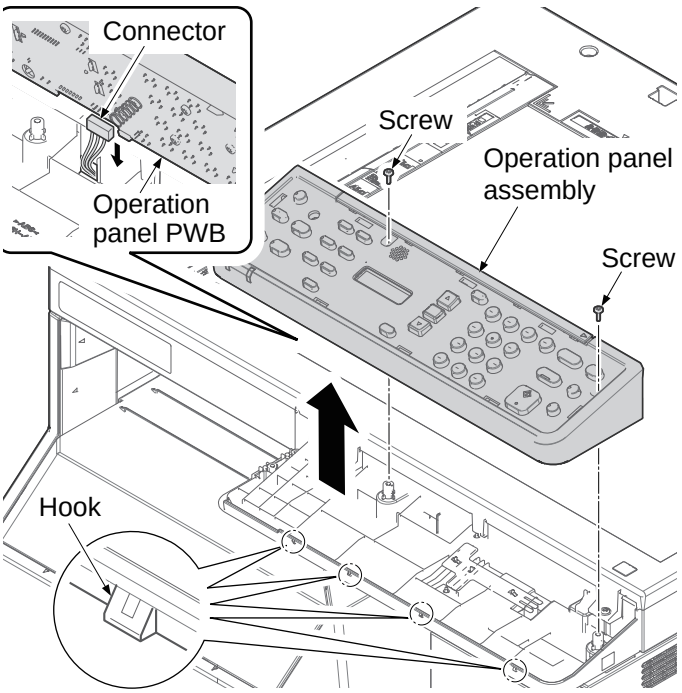

Figure 1-5-27

7. Remove the DP connector cover by releasing two hooks using flat screw driver.

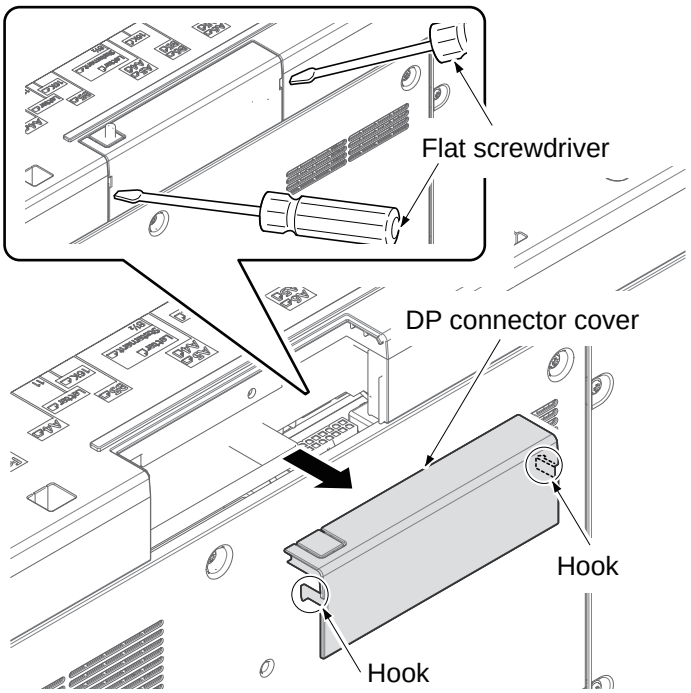

Figure 1-5-28

TONER
www.tonerplus.com.ua

8. Remove four screws.
9. Remove upward the scanner cover by releasing seven hooks.

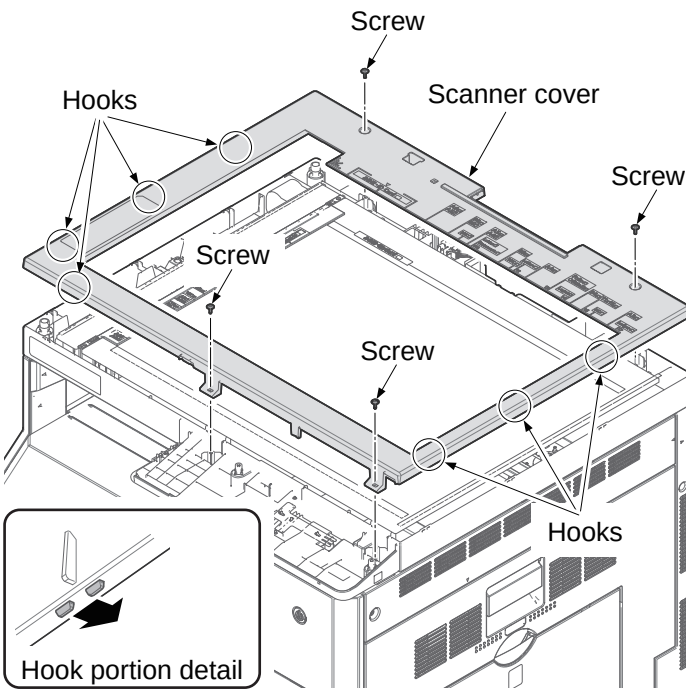

Figure 1-5-29

10. Remove the contact glass assembly and the slit glass assembly.

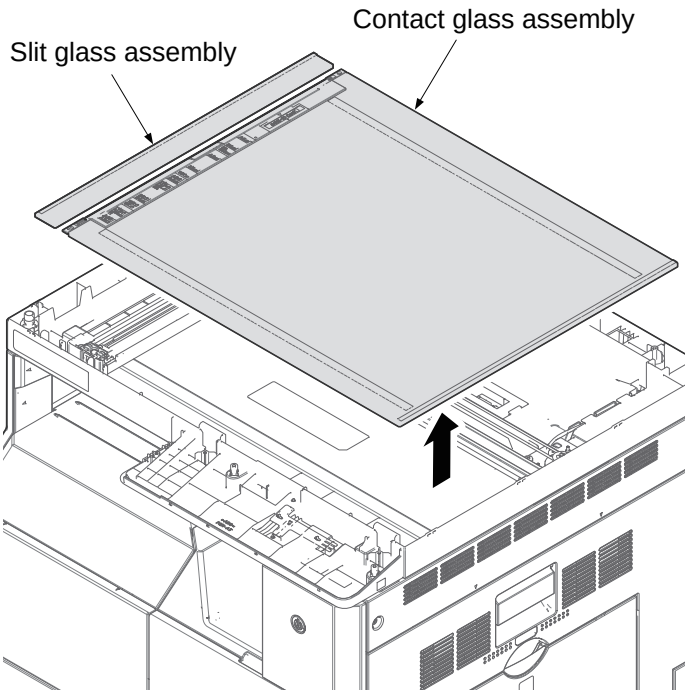

Figure 1-5-30

TONER
www.tonerplus.com.ua

11. Remove the CIS assembly by releasing two hooks of CIS carriage.

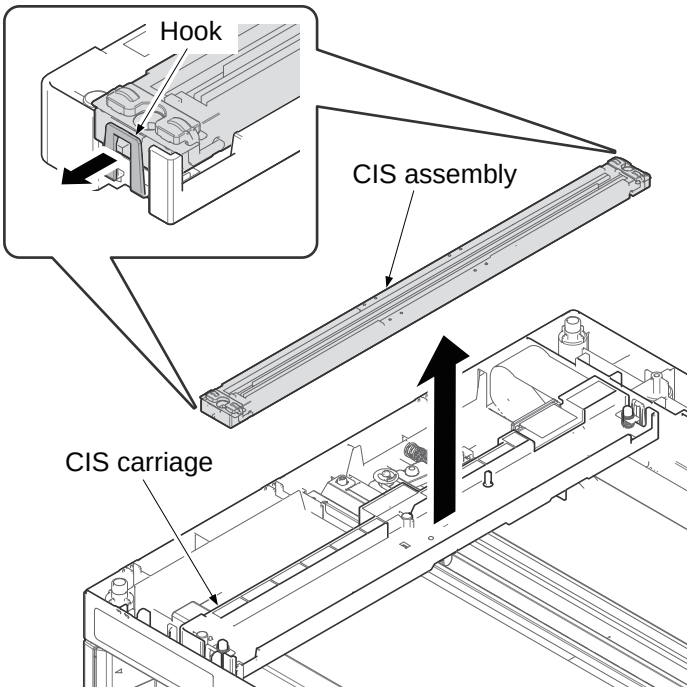

Figure 1-5-31

12. Remove the fulcrum part of the slider by bending.
13. Check or replace the CIS and refit all the removed parts.

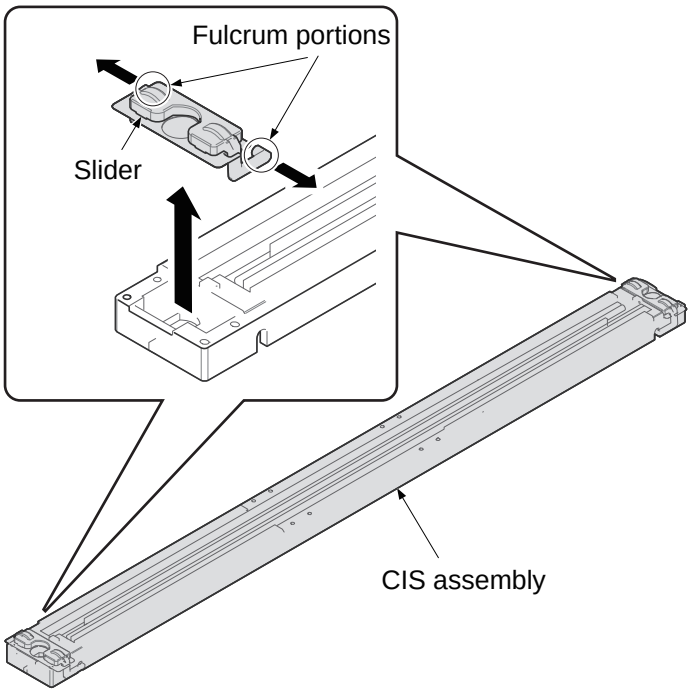

Figure 1-5-32

TONER
www.tonerplus.com.ua

(1-2) Detaching and refitting the image scanner unit

Procedure

1. Remove seven screws.
2. Remove the rear cover by pulling upward and releaseing three hooks.

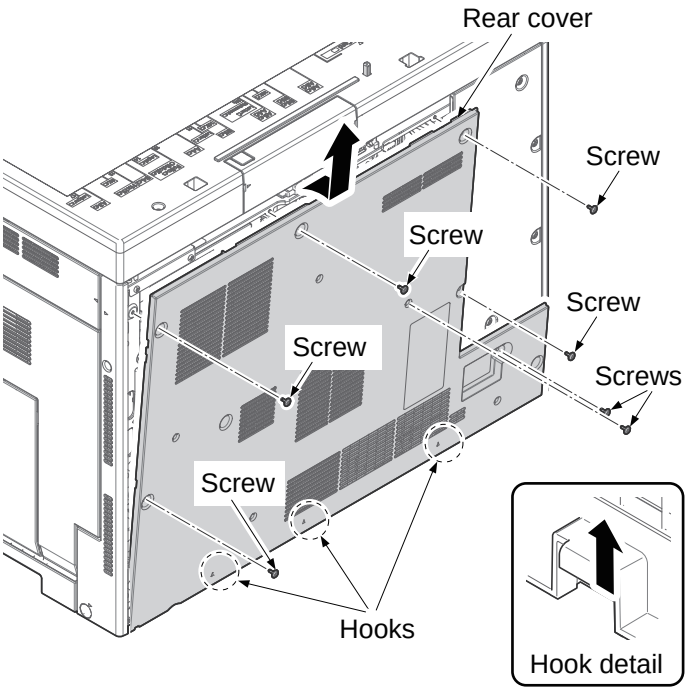

Figure 1-5-33

3. Remove six screws.
4. Remove the rear sub cover.

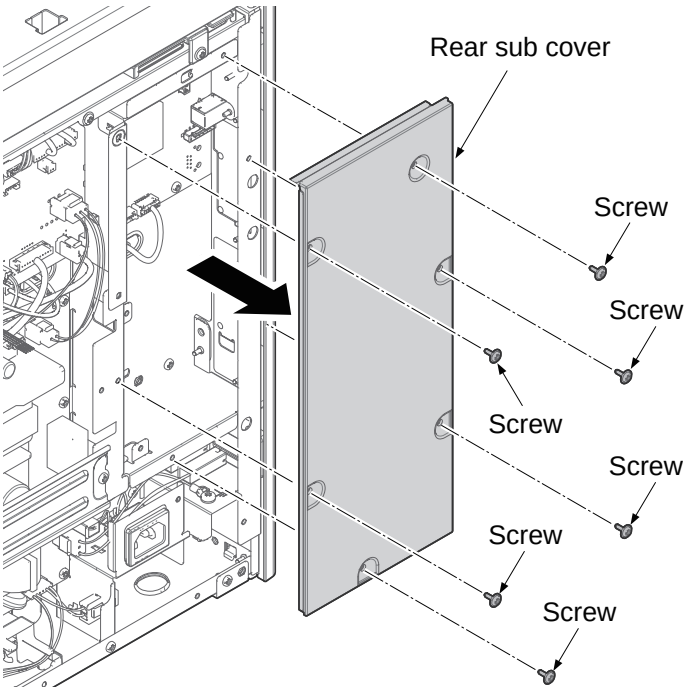

Figure 1-5-34

TONER
www.tonerplus.com.ua

5. Release three wire saddles.
6. Remove the connectors(YC1 and YC7) from the engine PWB.

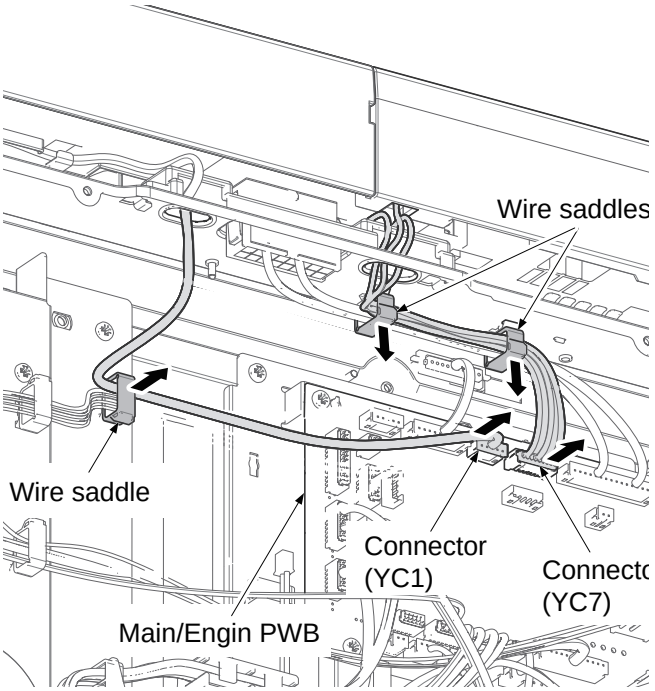

Figure 1-5-35

7. Release three wire saddles.
8. Remove the connectors(YC2006 and YC2011) from the engine PWB.

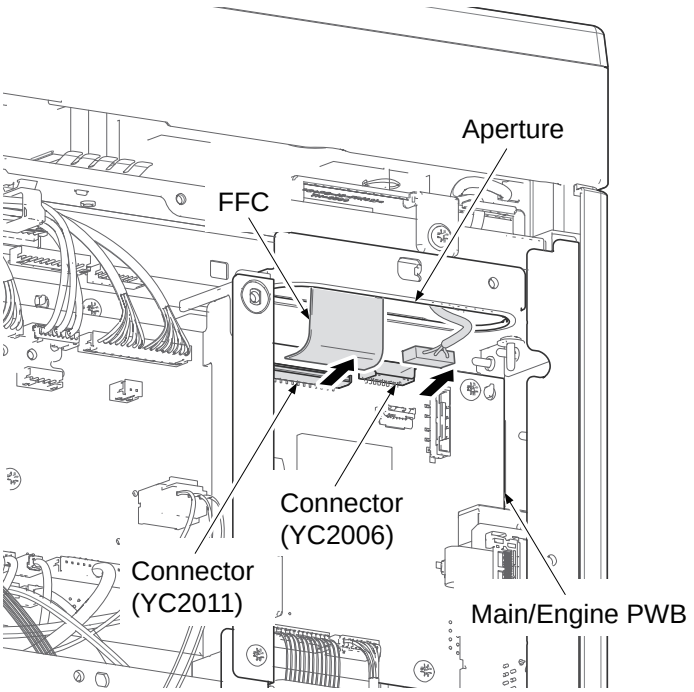

Figure 1-5-36

TONER
www.tonerplus.com.ua

9. Open the right cover.
10. Remove a screw.

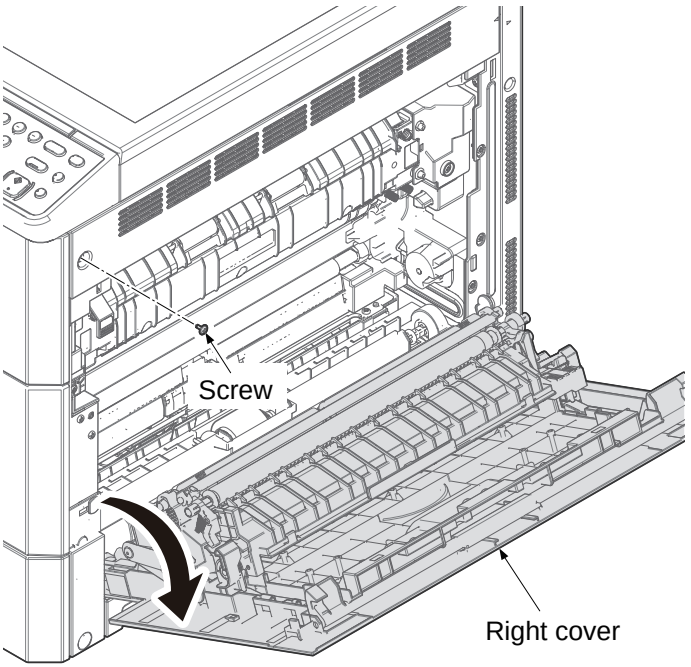

Figure 1-5-37

11. Release two hooks A using the flat screw driver.
12. Remove the right upper cover by pulling downward and releasing six hooks B.

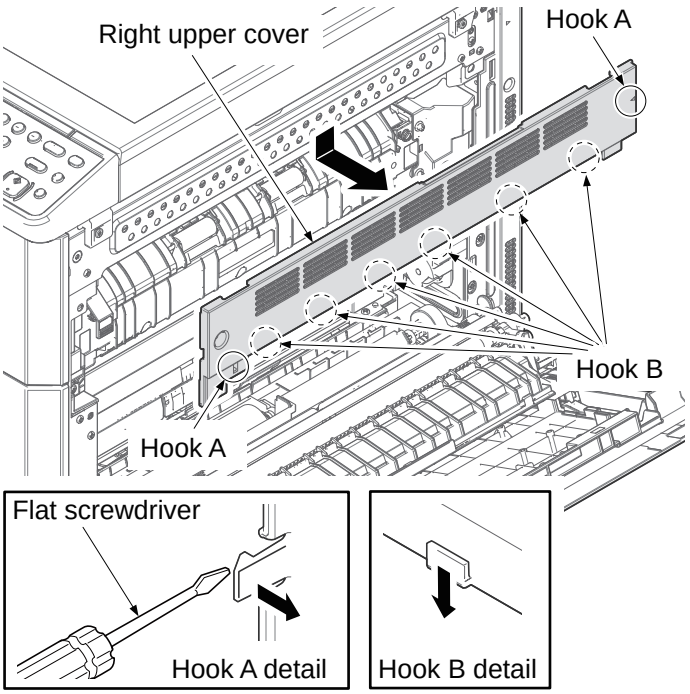

Figure 1-5-38

TONER
www.tonerplus.com.ua

13. Remove eight screws.
14. Remove the left cover by pulling upward and releasing four hooks.

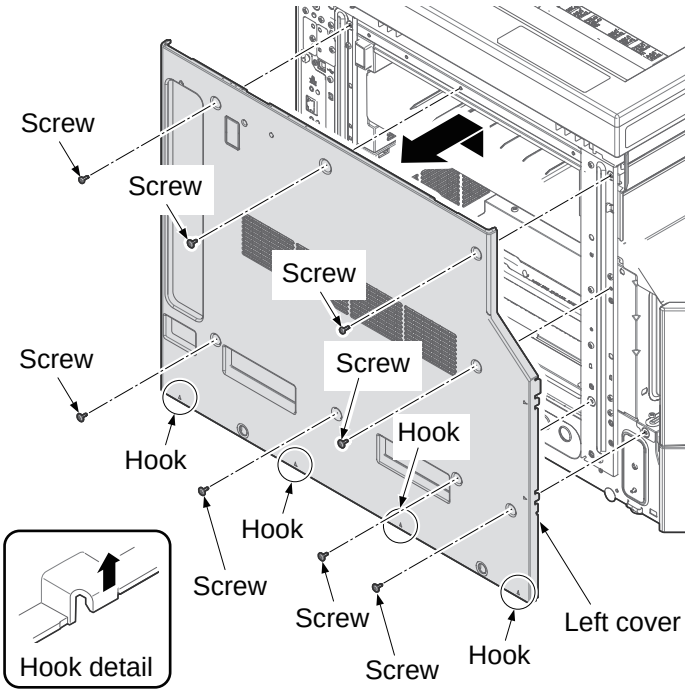

Figure 1-5-39

15. Remove four screws.
16. Remove the image scanner unit upward.
17. Check or replace the image scanner unit and refit all the removed parts.

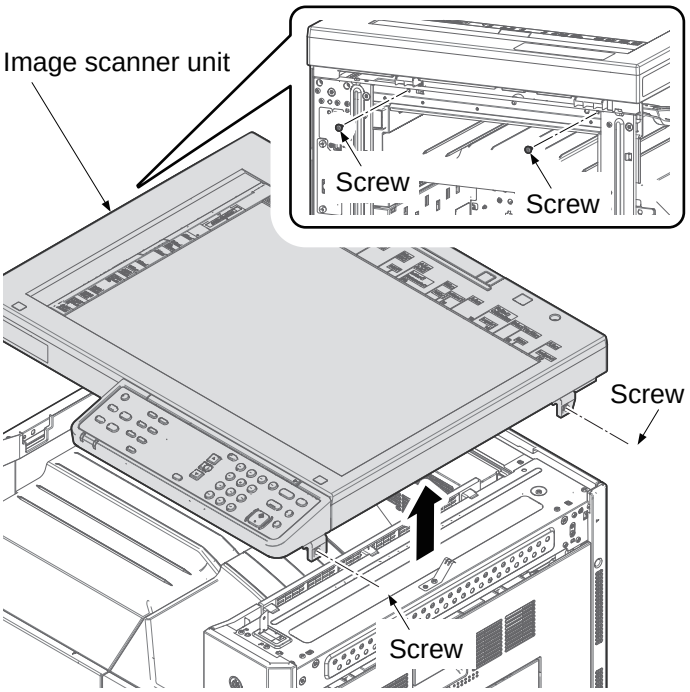

Figure 1-5-40

TONER
www.tonerplus.com.ua

(2) Laser scanner section

The charged surface of the drum is then scanned by the laser beam from the laser scanner unit. The laser beam is dispersed as the polygon motor (PM) revolves to reflect the laser beam over the drum. Various lenses and mirror are housed in the laser scanner unit, adjust the diameter of the laser beam, and focalize it at the drum surface.

[Component formation]

1. Polygon motor (PM)
2. fθ main lens
3. LSU dust shield glass
4. LSU base
5. LSU cover
6. Collimate lens
7. Cylindrical lens

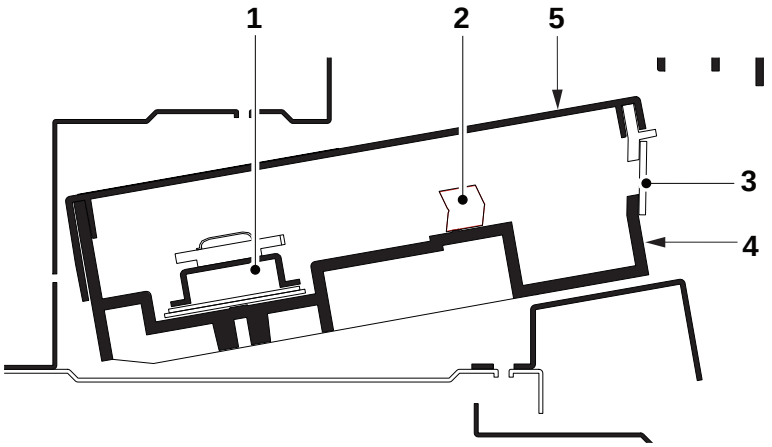

Figure 1-5-41

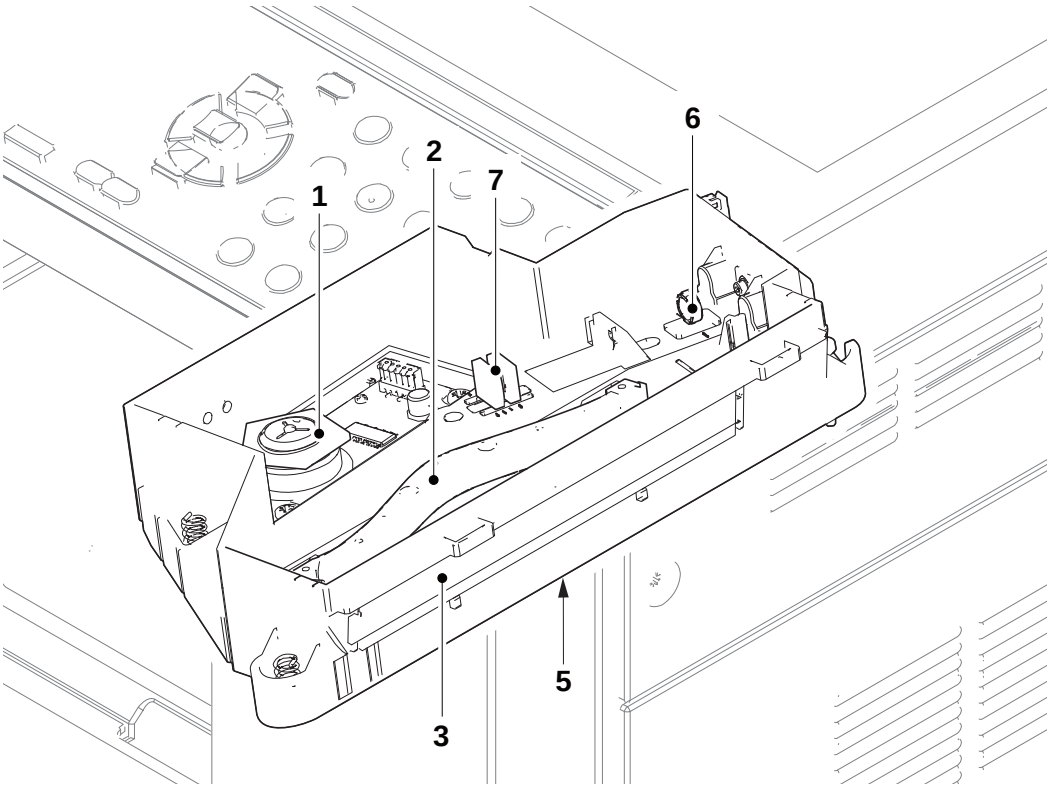

Figure 1-5-42

TONER
www.tonerplus.com.ua

[Control block diagram]

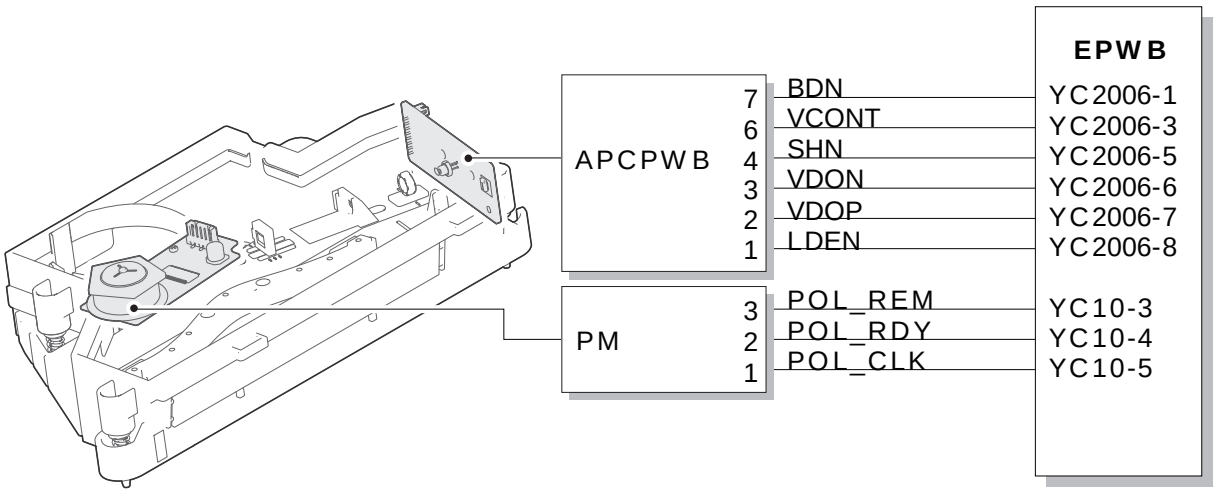

Figure 1-5-43

TONER
www.tonerplus.com.ua

(2-1) Detaching and refitting the laser scanner unit

Procedure

1. Remove the imsge scanner unit.
2. Pull out the cassette from the main unit.
3. Open the front cover.

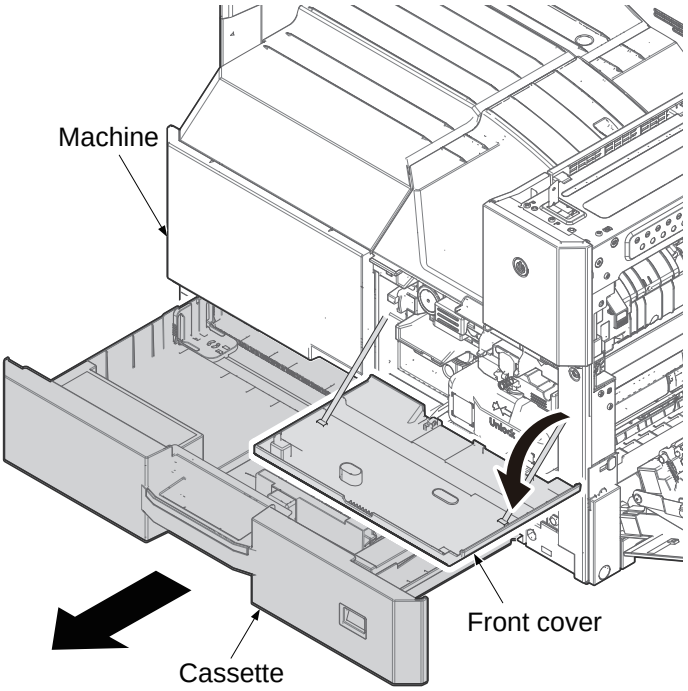

Figure 1-5-44

4. Release it by pinching the lock lever and then remove the waste toner box forward.

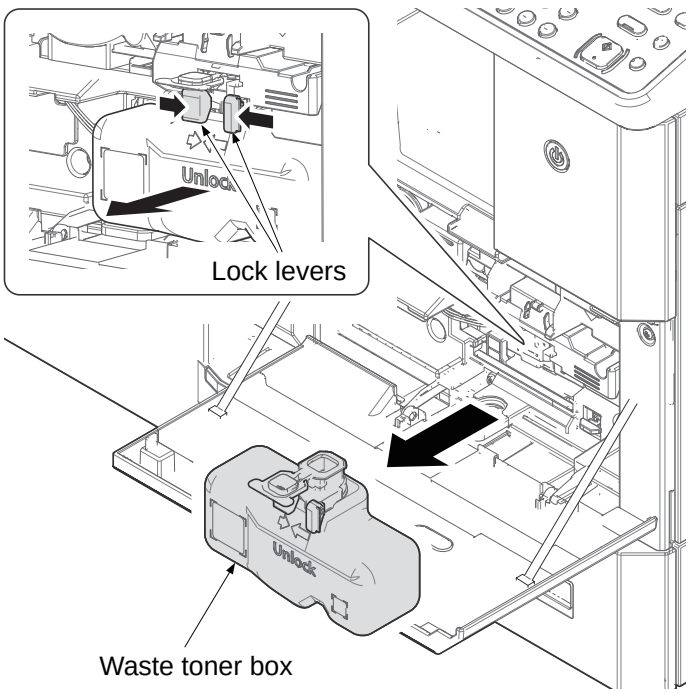

Figure 1-5-45

TONER
www.tonerplus.com.ua

5. Release the lock lever by sliding to left direction.
6. Pull out the toner container.

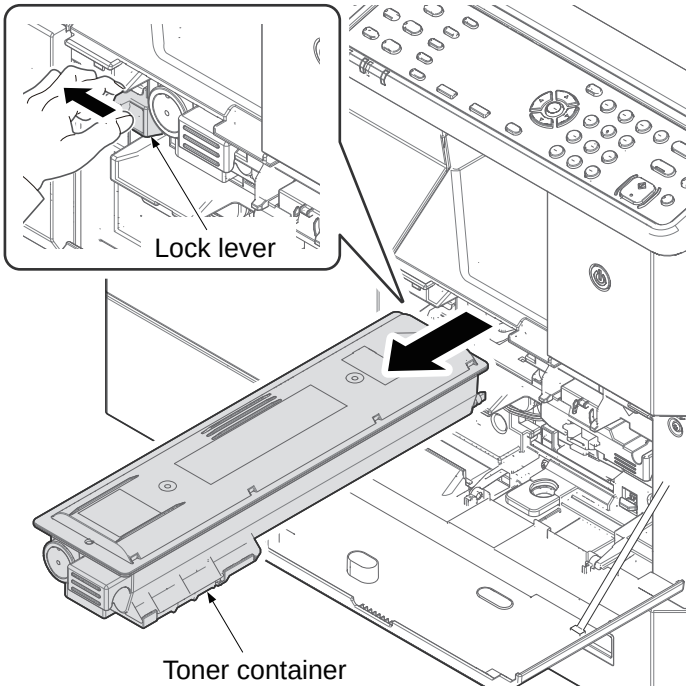

Figure 1-5-46

7. Release the developer electric wire from the hook of the electric wire and then remove the electric wire cover by releasing the lock lever.
8. Remove the developer electric wire connector.

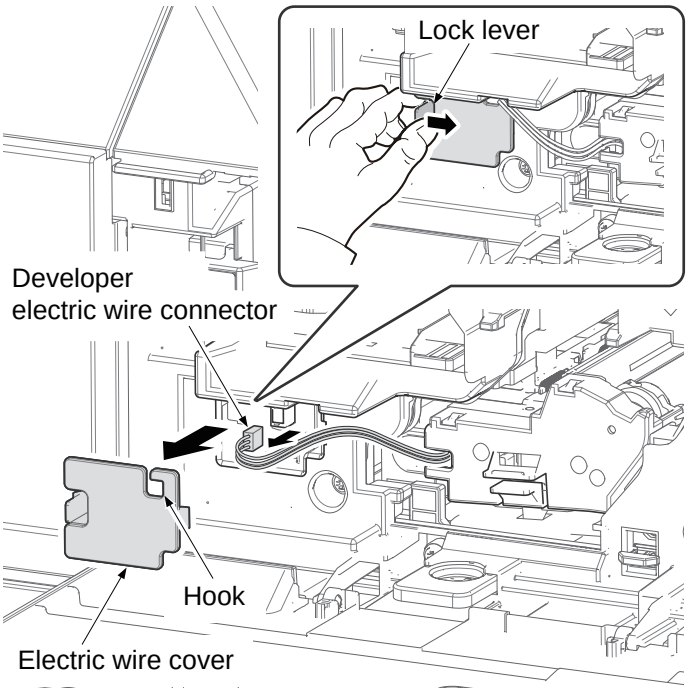

Figure 1-5-47

TONER
www.tonerplus.com.ua

9. Pull the developer evacuation lever forward.
10. Remove the developer unit by pulling forward.

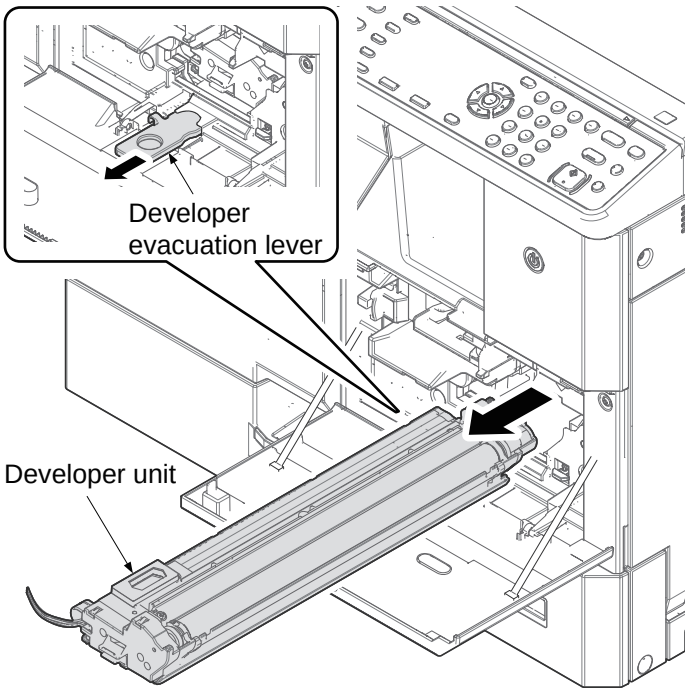

Figure 1-5-48

11. Open the right cover.

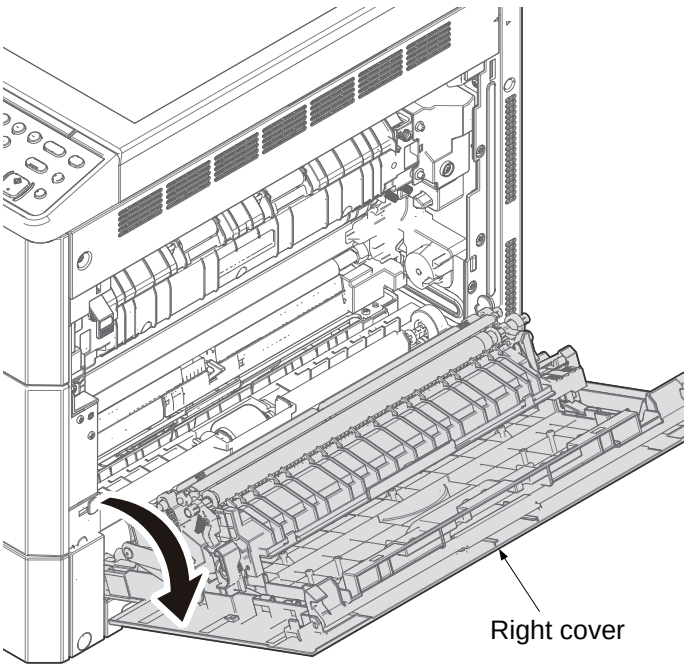

Figure 1-5-49

TONER
www.tonerplus.com.ua

12. Remove the screw.
13. Remove the drum unit by pulling it forward.
    *: Be careful to not touch a drum or not to hit.

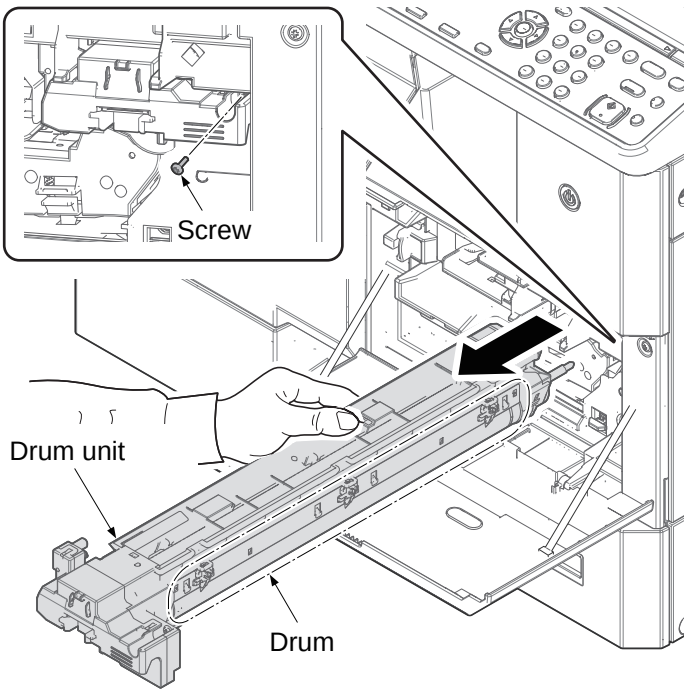

Figure 1-5-50

14. Remove eight screws.
15. Remove the left cover by pulling upward and releasing four hooks.

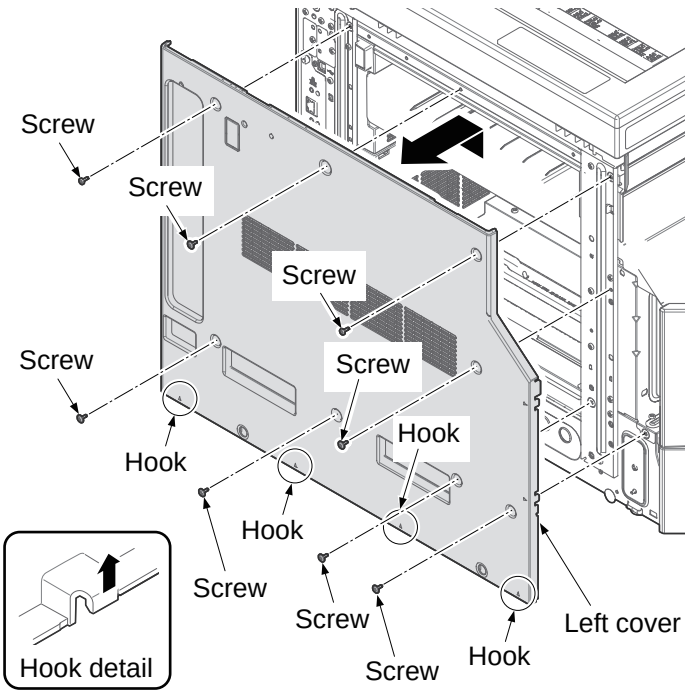

Figure 1-5-51

TONER
www.tonerplus.com.ua

16. Unhook two hooks using flat screw driver and then remove the front left cover by pulling upward.

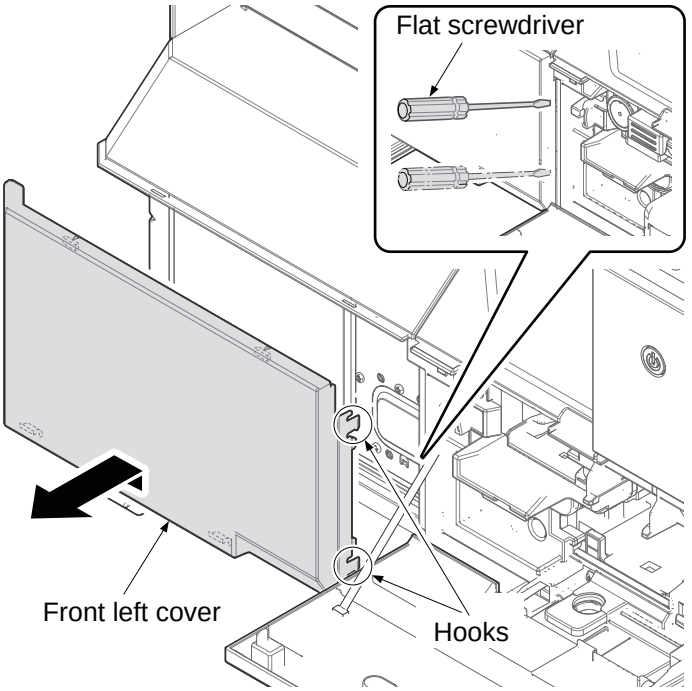

Figure 1-5-52

17. Remove the left tray.

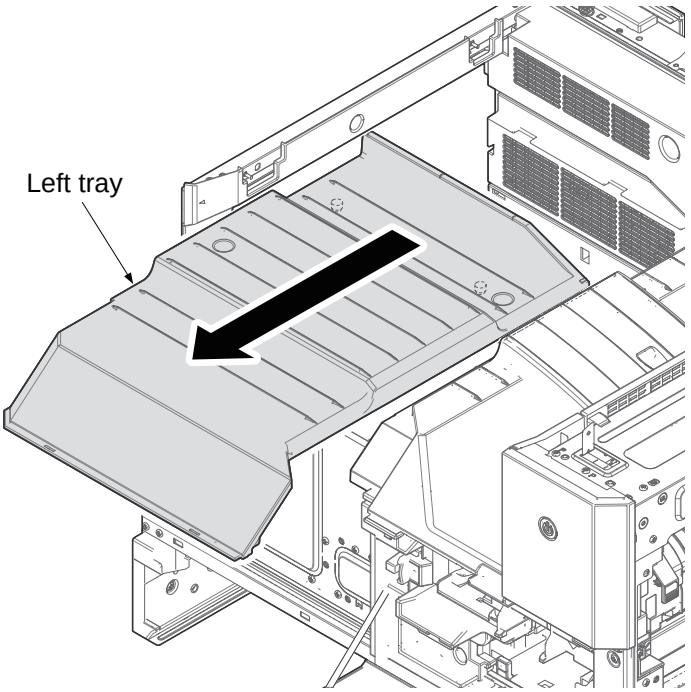

Figure 1-5-53

TONER
www.tonerplus.com.ua

18. Remove a screw.
19. Remove the right tray.

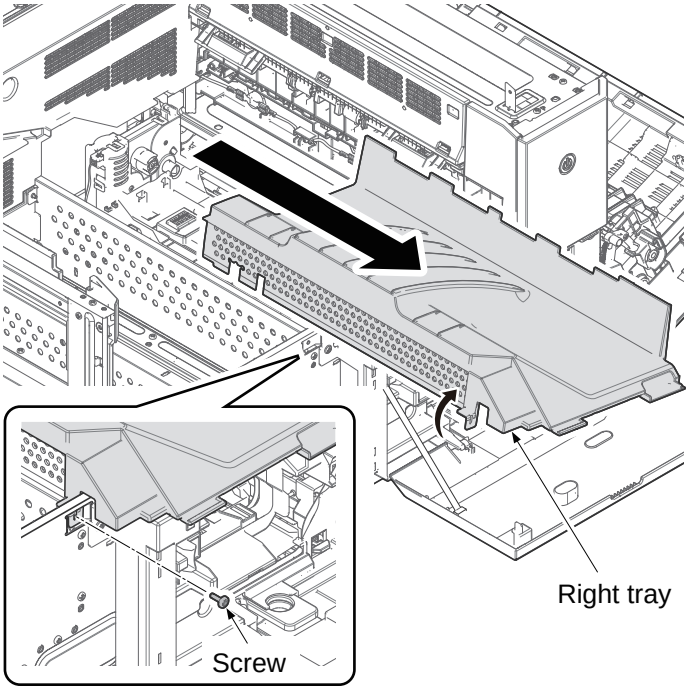

Figure 1-5-54

20. Remove two connectors.

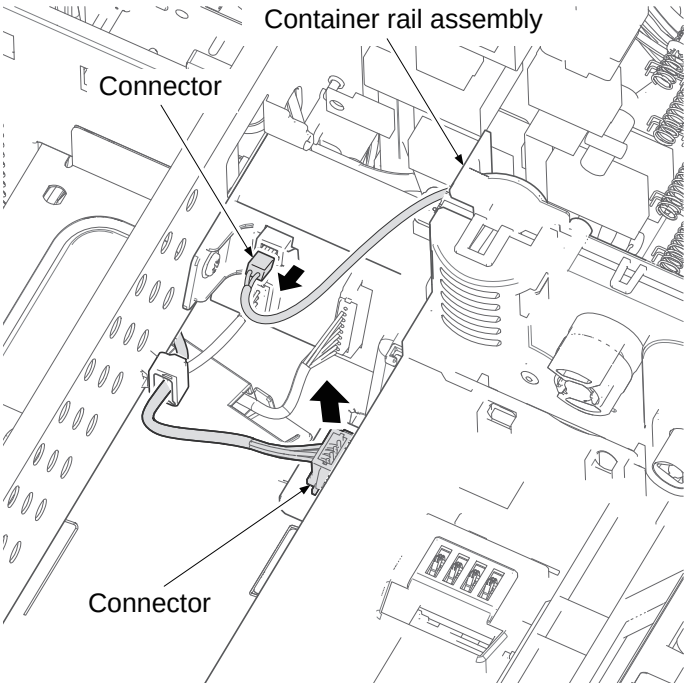

Figure 1-5-55

TONER
www.tonerplus.com.ua

21. Remove a screw.
22. Remove it forward after raising a little the front side of the developer rail assembly.

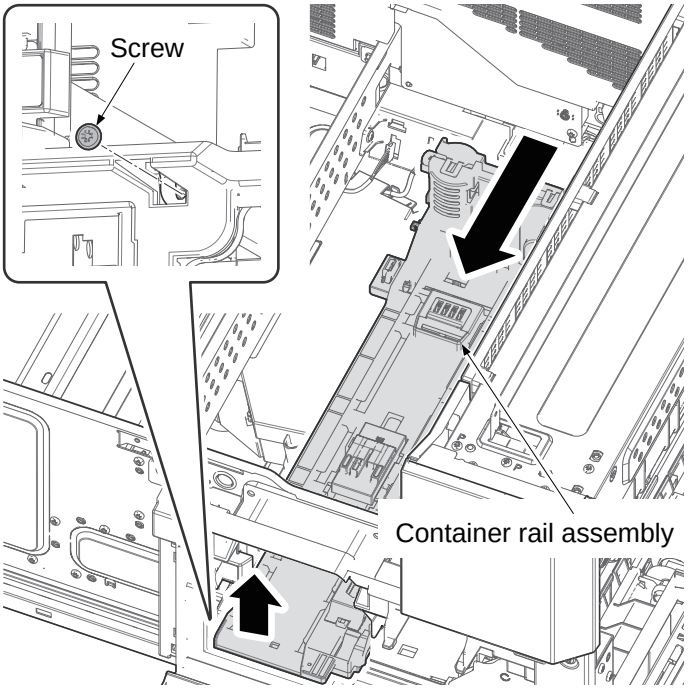

Figure 1-5-56

23. Remove the LSU connector.
24. Remove the screw and then remove the partition plate.

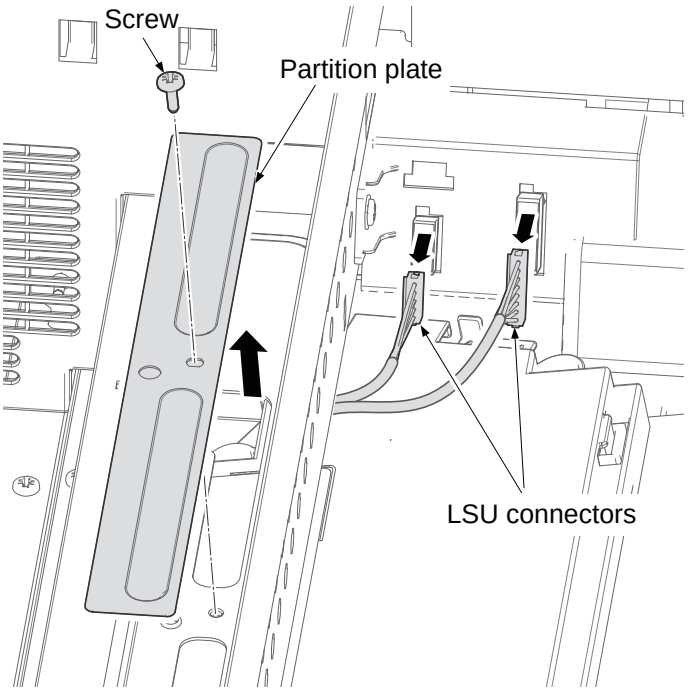

Figure 1-5-57

TONER
www.tonerplus.com.ua

25. Remove four screws.
26. Remove upward the laser scanner unit during leaning it.
    *: Be careful of the appearance which hits against a frame etc. and does not give a shock to LSU (polygon motor) at the time of attachment and detachment of LSU.
27. Check or replace the laser scanner unit and refit all the removed parts.

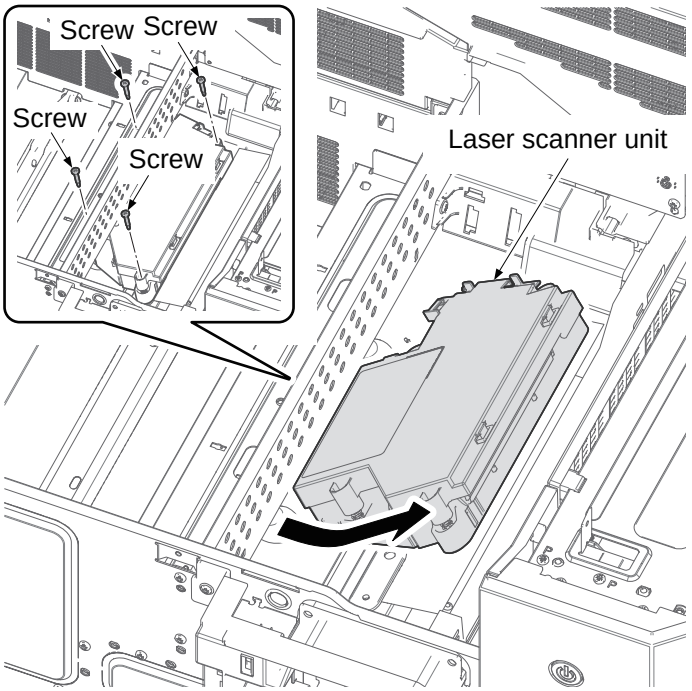

Figure 1-5-58

TONER
www.tonerplus.com.ua

1-5-4 Developer section

The developing unit consists of the developing roller that forms the magnetic brush, the developing blade and the developing screws that agitate the toner.Also, the toner sensor (TS) checks whether or not toner remains in the developing unit.

[Component formation]

1. Developing roller
2. Developing blade
3. Developing screw A
4. Developing screw B
5. Developing screw C
6. Developer case
7. Toner supply roller
8. Toner container

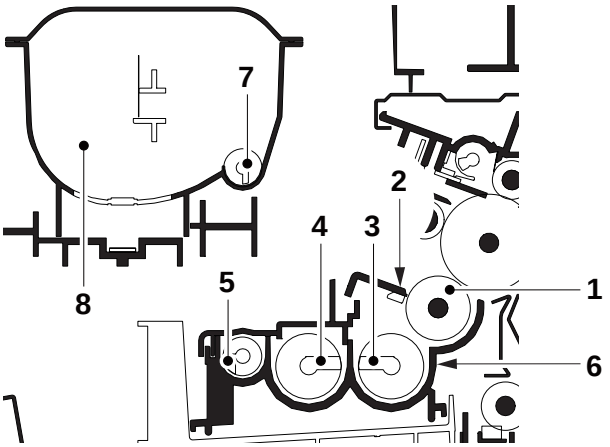

Figure 1-5-59

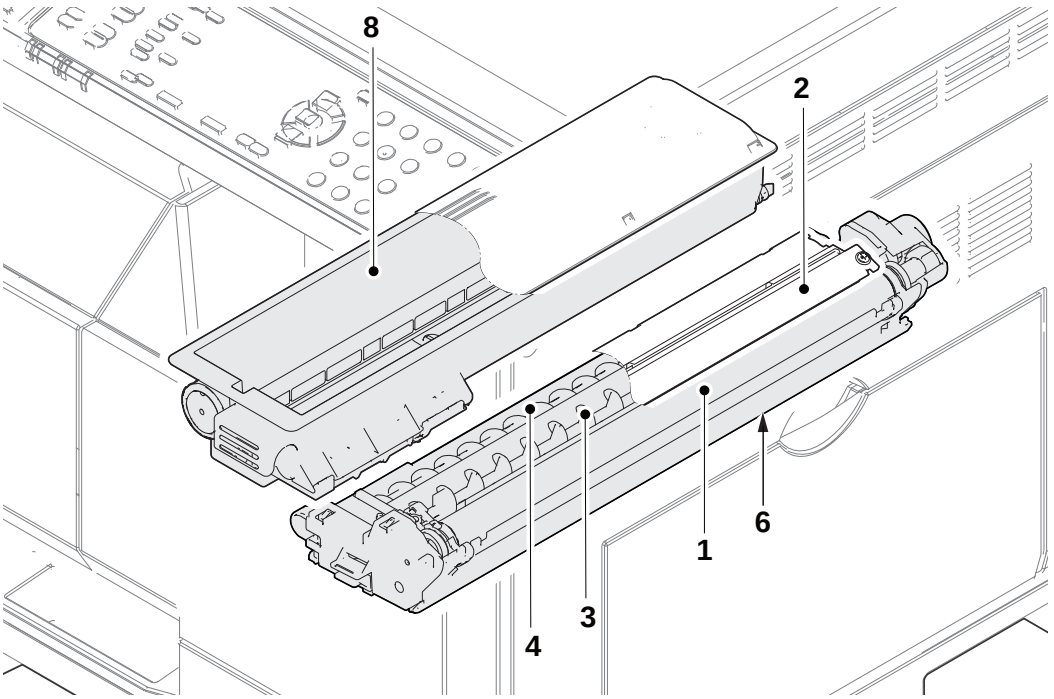

Figure 1-5-60

TONER
www.tonerplus.com.ua

[Control block diagram]

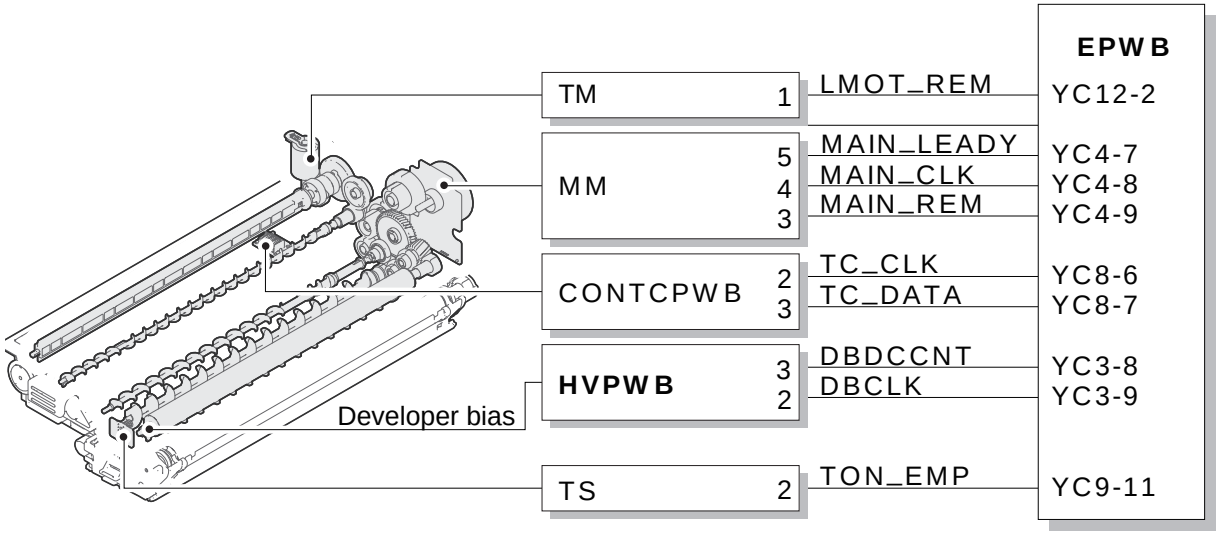

Figure 1-5-61

(1) Detaching and refitting the developer unit

Procedure

1. Open the front cover.

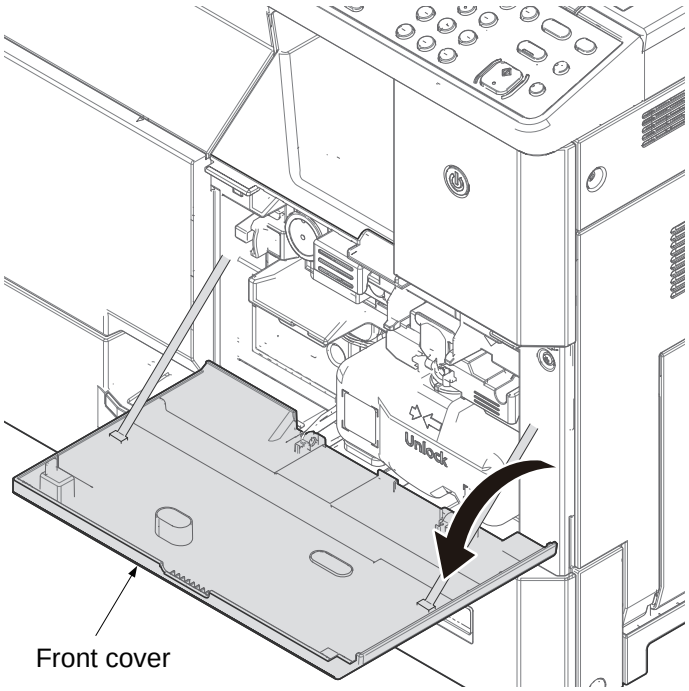

Figure 1-5-62

TONER
www.tonerplus.com.ua

2. Release it by pinching the lock lever and then remove the waste toner box forward.

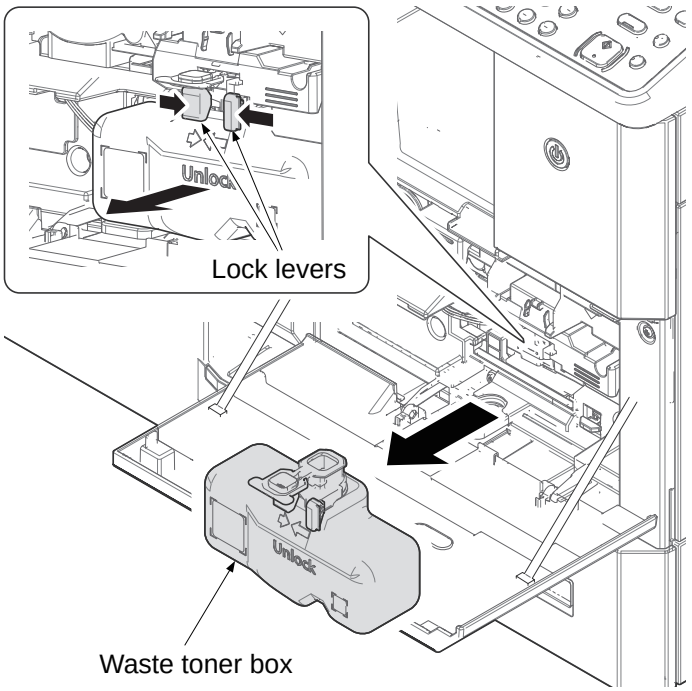

Figure 1-5-63

3. Release the lock lever by sliding to left direction.
4. Pull out the toner container.

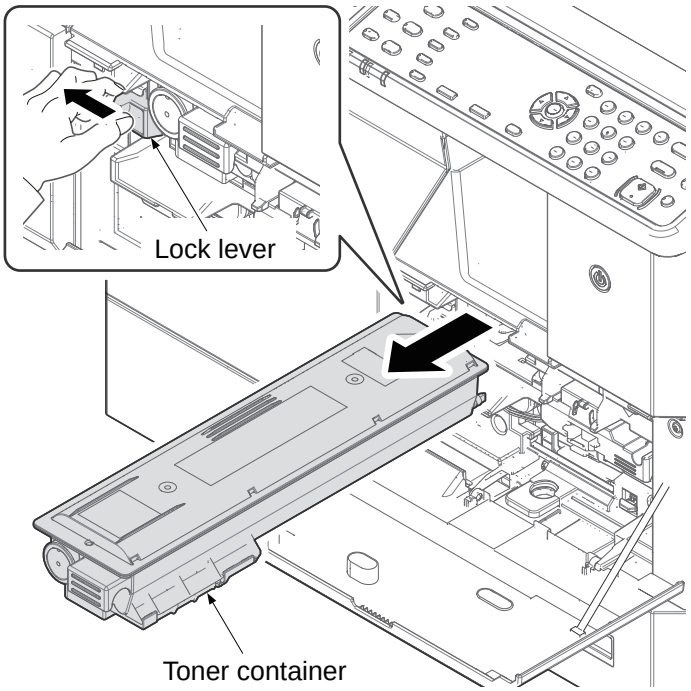

Figure 1-5-64

TONER
www.tonerplus.com.ua

5. Release the developer electric wire from the hook of the electric wire and then remove the electric wire cover by releasing the lock lever.
6. Remove the developer electric wire connector.

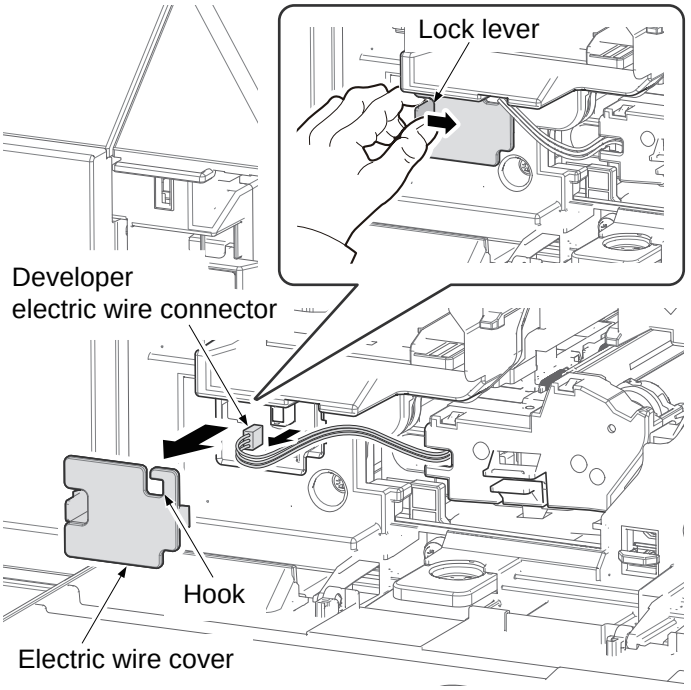

Figure 1-5-65

7. Pull the developer evacuation lever forward.
8. Remove the developer unit by pulling forward.
9. Check or replace the developer unit and refit all the removed parts.

10. When replacing the new unit,proceed as follows:
    1)Performs maintenance mode U130 (Set Toner Install) (see page 1-3-47).
    2)Performs maintenance mode U157 (Dev Time) (see page 1-3-52).
    3)Performs maintenance mode U158 (Dev Cnt) (see page 1-3-52).

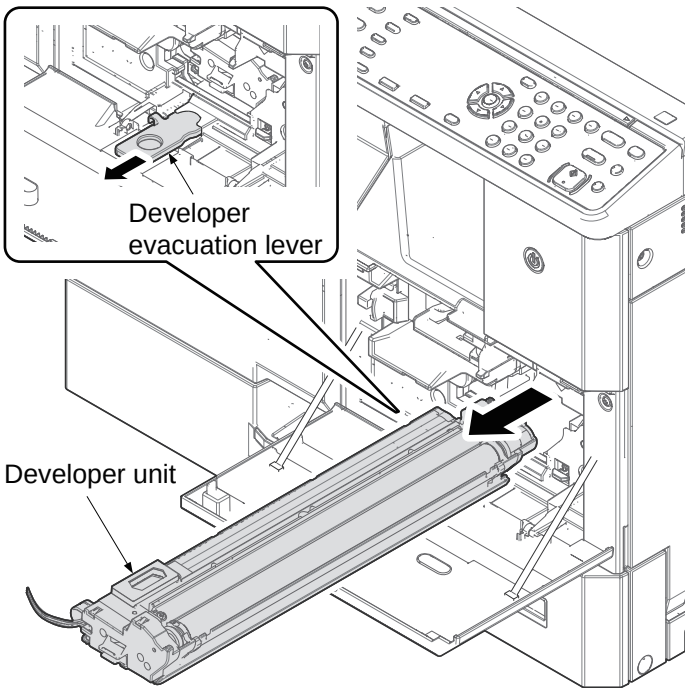

Figure 1-5-66

TONER
www.tonerplus.com.ua

1-5-5 Drum section

The drum section consists of the drum, the charger roller unit, and the cleaning unit, and the drum surface is uniformly charged in preparation for formation of residual image by laser beam.
After transfer is complete, toner remaining on the drum surface is chipped off with the cleaning blade and is collected to the waste toner box with the drum screw. The cleaning lamp (CL) consists of LEDs and removes residual charge on the drum before main charging.

[Component formation]

1. Drum
2. Charger roller
3. Charger case
4. Cleaning blade
5. Cleaning roller
6. Sweep roller
7. Scraper
8. Drum frame
9. Cleaning lamp (CL)

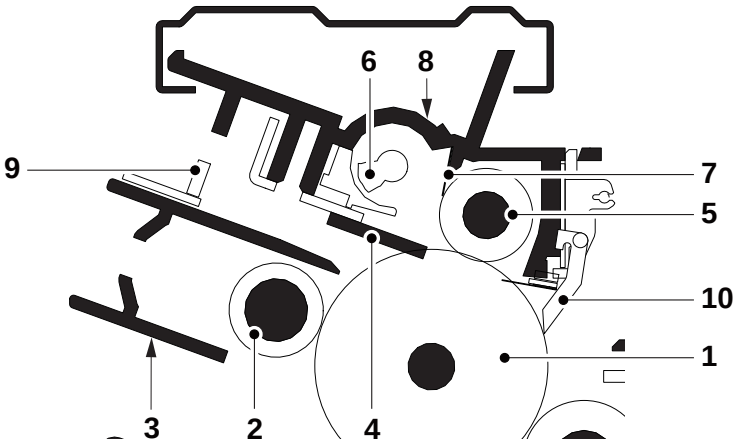

Figure 1-5-67

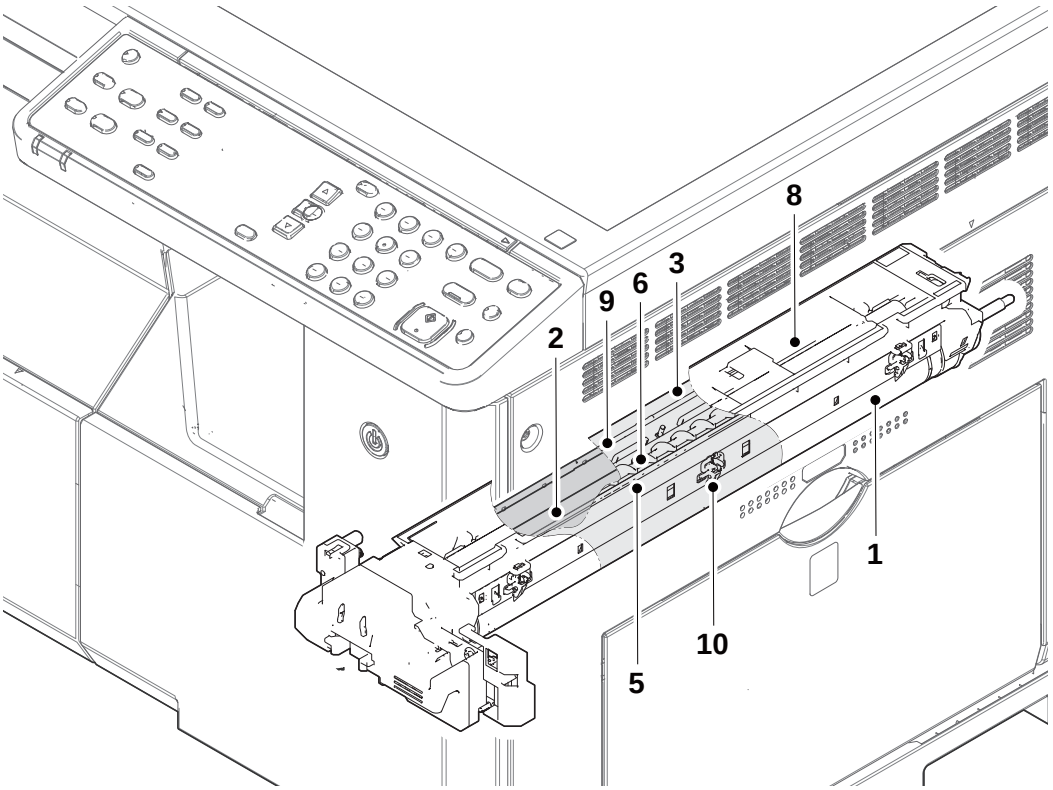

Figure 1-5-68

TONER
www.tonerplus.com.ua

[Control block diagram]

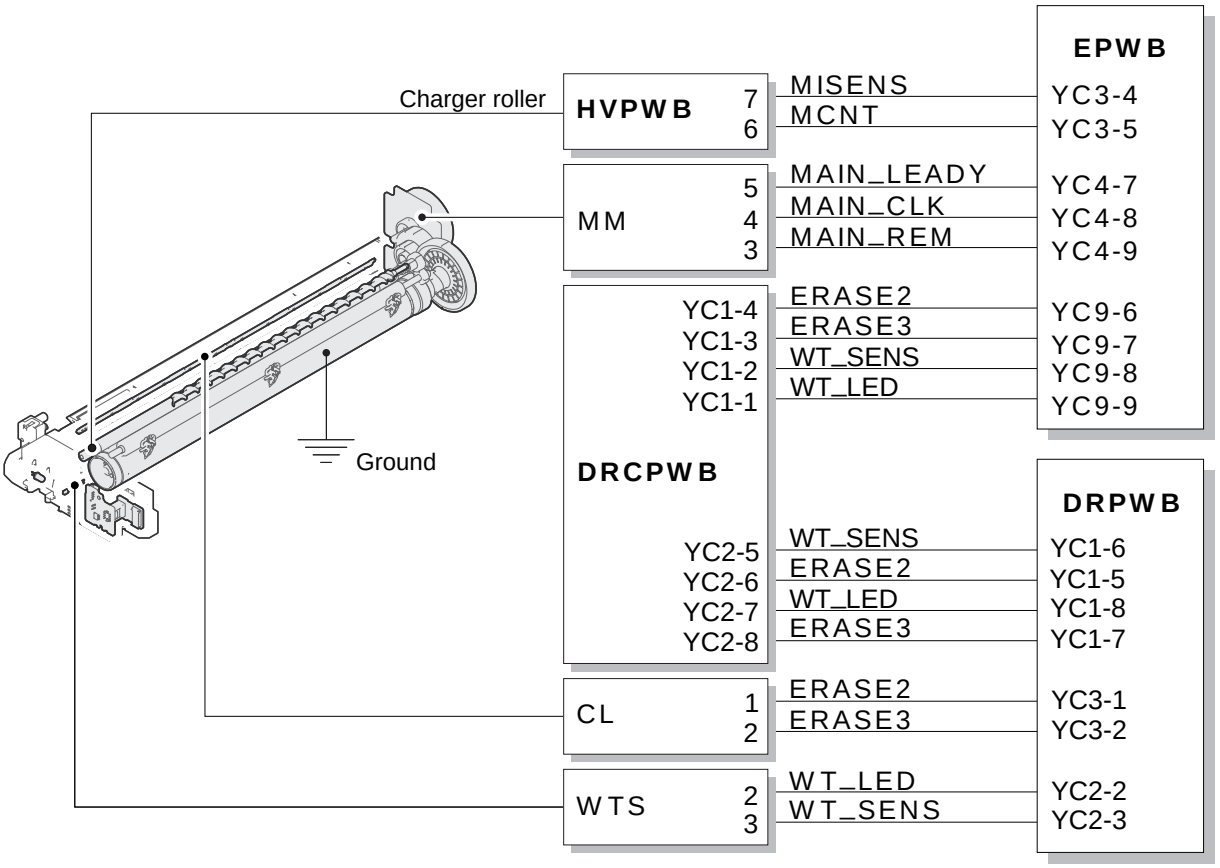

Figure 1-5-69

TONER
www.tonerplus.com.ua

(1) Detaching and refitting the drum unit

Procedure

1. Pull the developer evacuation lever forward.

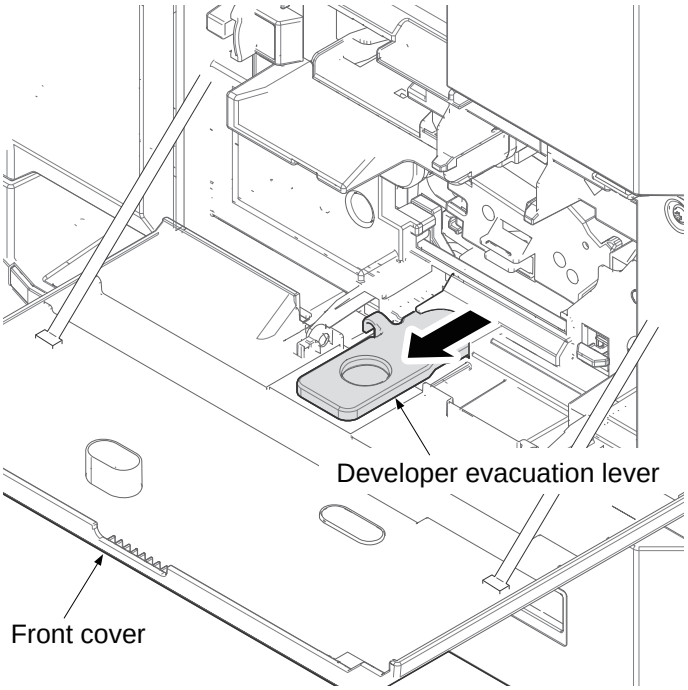

Figure 1-5-70

2. Open the right cover.

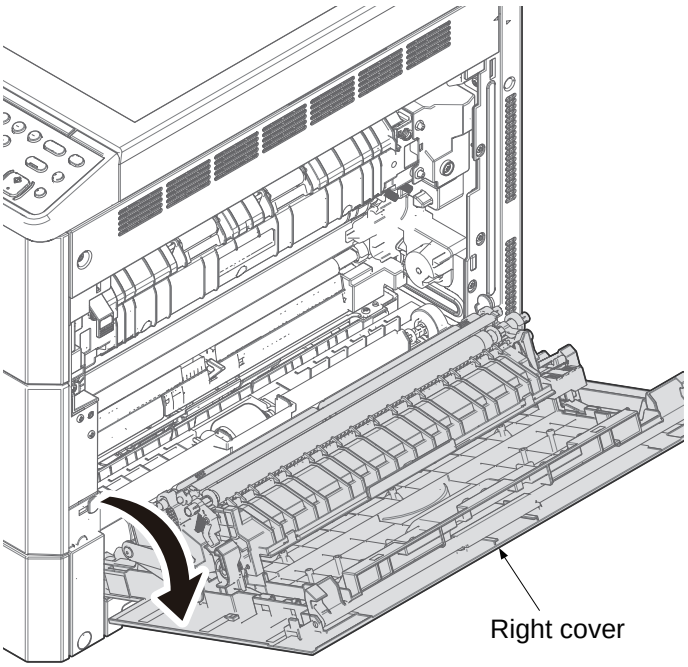

Figure 1-5-71

TONER
www.tonerplus.com.ua

3. Remove the screw.
4. Remove the drum unit by pulling it forward.
*: Be careful to not touch a drum or not to hit.
5. Check or replace the drum unit and refit all the removed parts.

6. When replacing the new unit,proceed as follows:
   1)Performs maintenance mode U110 (Drum Cnt) (see page 1-3-45).

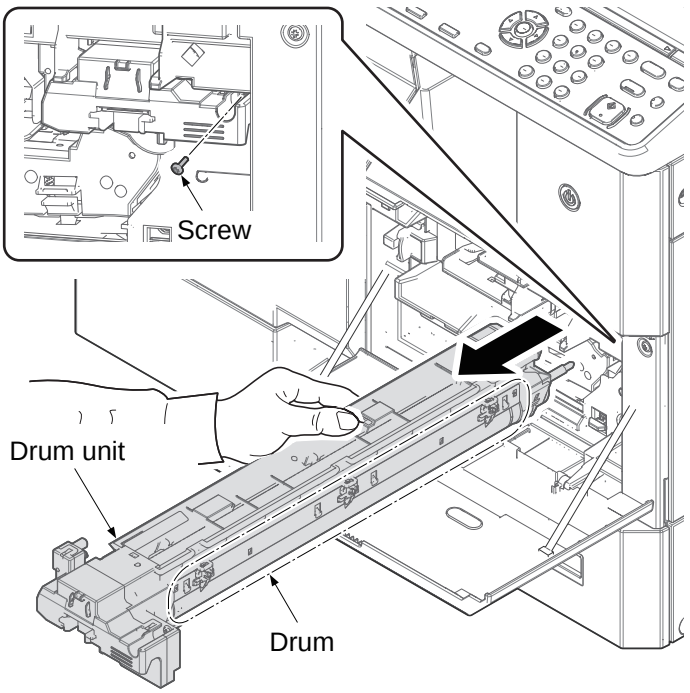

Figure 1-5-72

TONER
www.tonerplus.com.ua

1-5-6 Transfer/Separation section

The transfer and separation section consists mainly of the transfer roller, separation electrode and drum separation claws.
A high voltage generated by the high voltage PWB (HVPWB) is applied to the transfer roller for transfer charging.
Paper after transfer is separated from the drum by applying separation charging that is output from the high voltage PWB (HVPWB) to the separation electrode.

[Component formation]

1. Left ragistration roller
2. Right ragistration roller
3. Actuator
   (Registration sensor)
4. Paper chute guide
5. Drum
6. Transfer roller
7. Separation needle

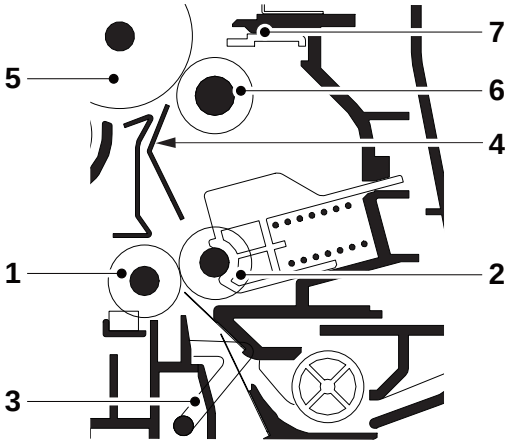

Figure 1-5-73

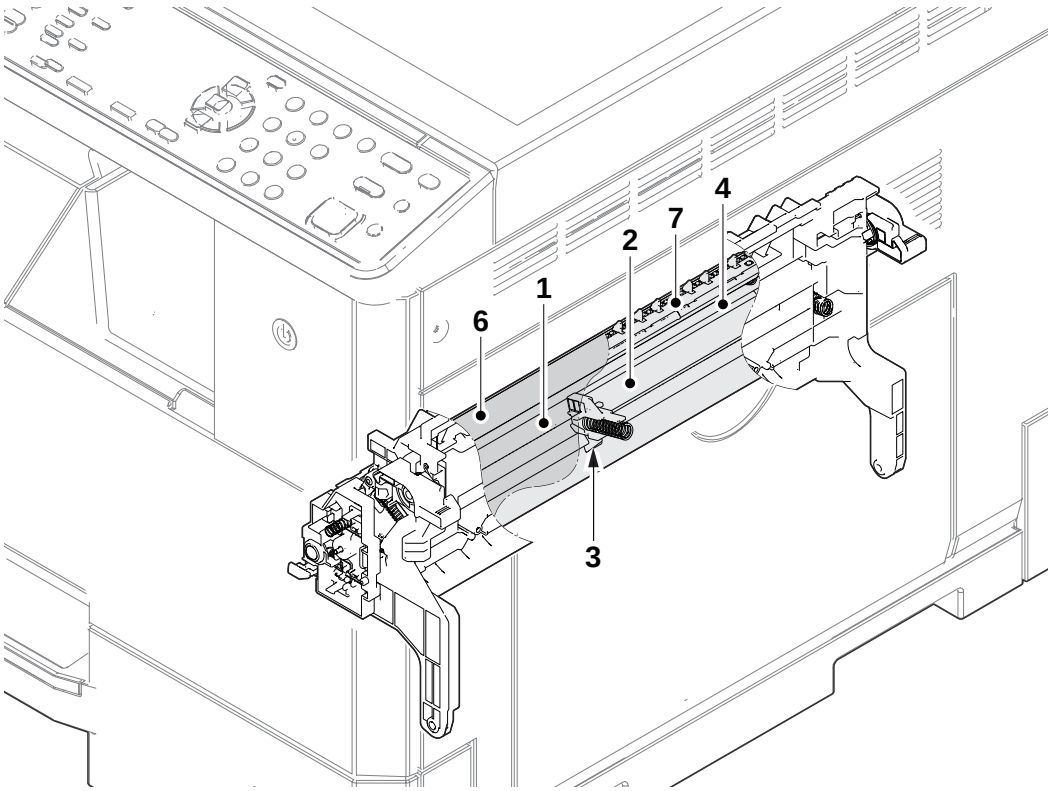

Figure 1-5-74

TONER
www.tonerplus.com.ua

[Control block diagram]

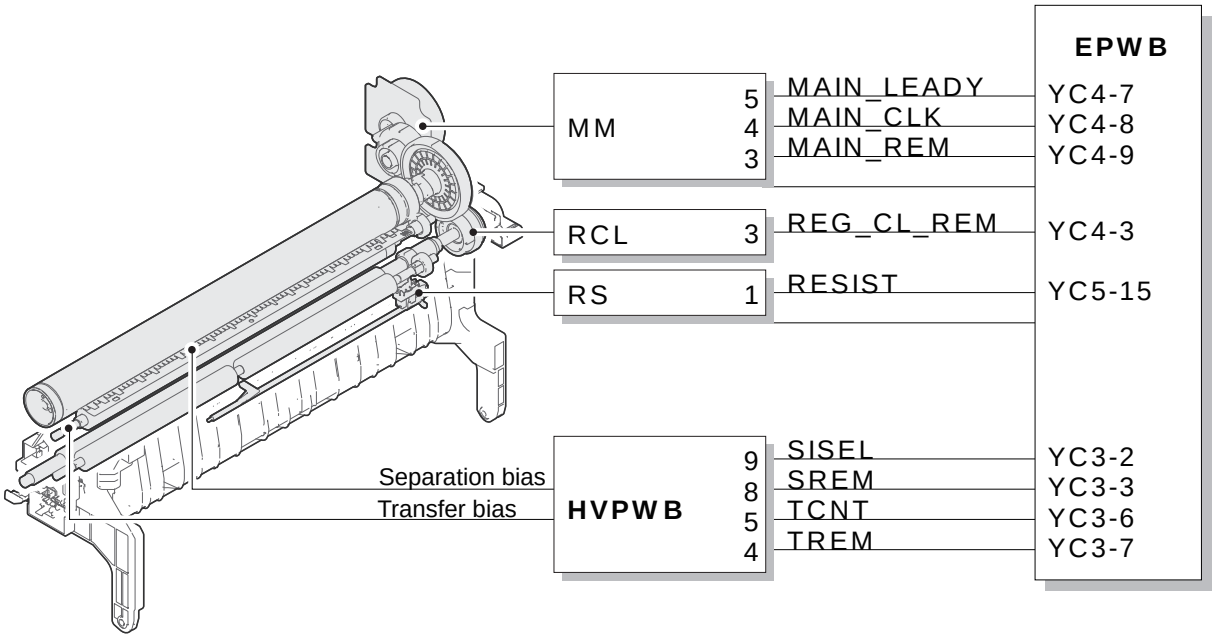

Figure 1-5-75

TONER
www.tonerplus.com.ua

(1) Detaching and refitting the transfer roller

Procedure

1. Open the right cover.

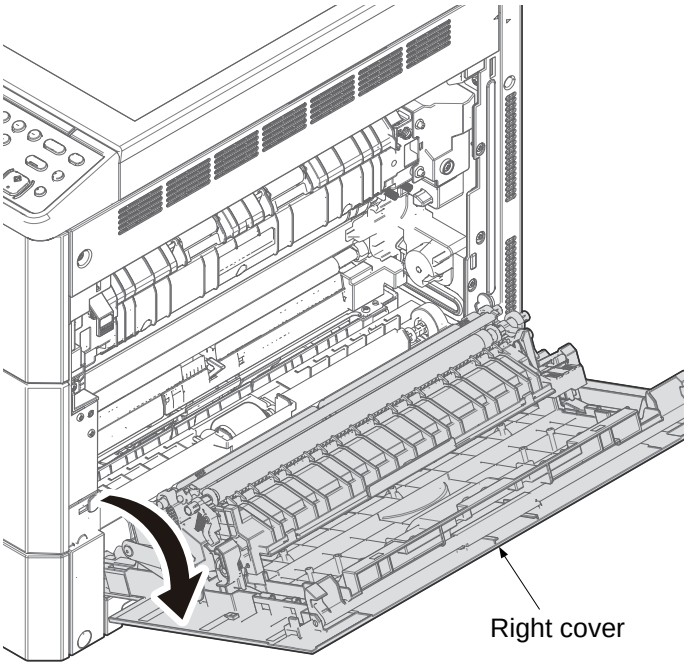

Figure 1-5-76

2. Remove the cap and the front lever in front of the transfer roller.
3. Remove the cap, the gear and the rear lever in rear of the transfer roller.
4. Remove the transfer roller from the bush by picking upward.
5. Check or replace the transfer roller and refit all the removed parts.

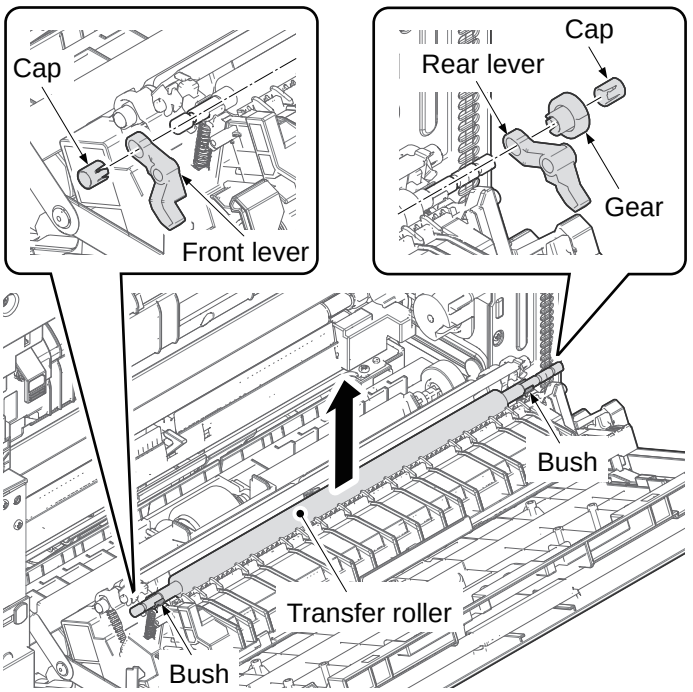

Figure 1-5-77

TONER
www.tonerplus.com.ua

(2) Detaching and refitting the separation needle holder

Procedure

1. Remove upward the separation needle holder and separation needle by releasing three hooks of rear side of the separation needle holder.
2. Check or replace the separation needle and refit all the removed parts.

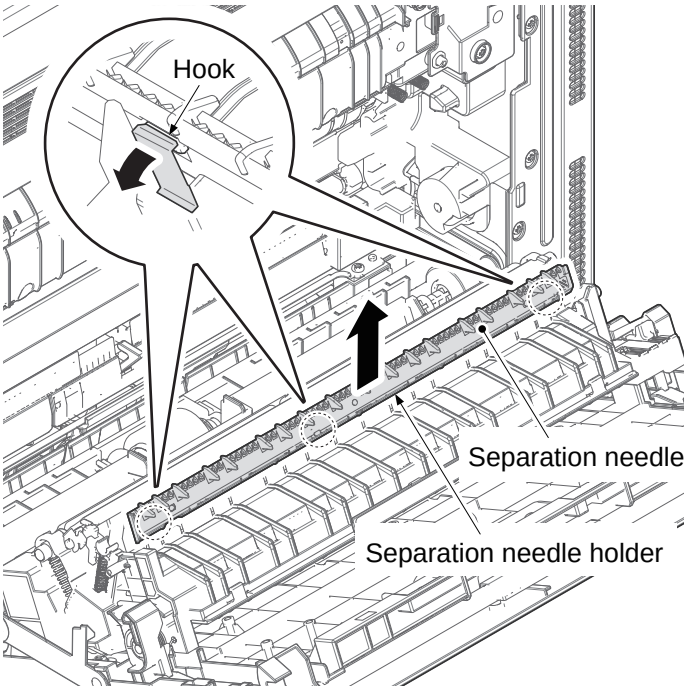

Figure 1-5-78

TONER
www.tonerplus.com.ua

1-5-7 Fuser and eject/feedshift section

The paper sent from the transfer/separation section is interleaved between the heat roller and the press roller. The heat roller is heated by the fuser heater (FUH), and the toner is fused by heat and pressure and fixed onto the paper because the press roller is pressed by the fuser press spring. The surface temperature of heat roller is detected by the fuser thermistor (FTH) and controlled by the main/engine PWB (MEPWB). If the fuser section shows extremely high temperature, the power line will be shut off and the fuser heater (FUH) is forced to turn off.
The paper eject/feedshift section consists of the conveying path which sends the paper that has passed the fuser section to the inner tray or the duplex conveying section.

[Component formation]

1. Heat roller
2. Press roller
3. Fuser heater (FUH)
4. Fuser thermistor (FUTH)
5. Fuser thermostat (FUTS)
6. Separators
7. Actuater
   (Fuser eject sensor (FUES))
8. Fuser pre guide
9. Eject roller
10. Eject pulley
11. Eject paper guide
12. Eject pulley B
13. Fuser upper guide
14. Eject pulley C

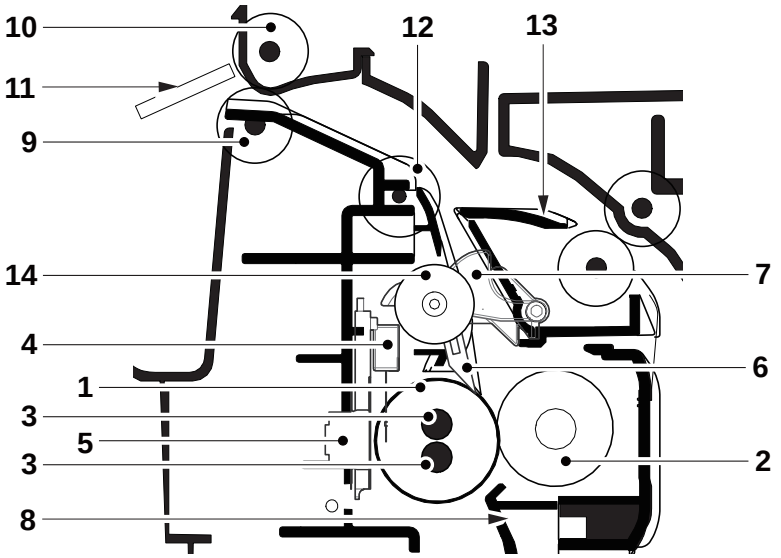

Figure 1-5-79

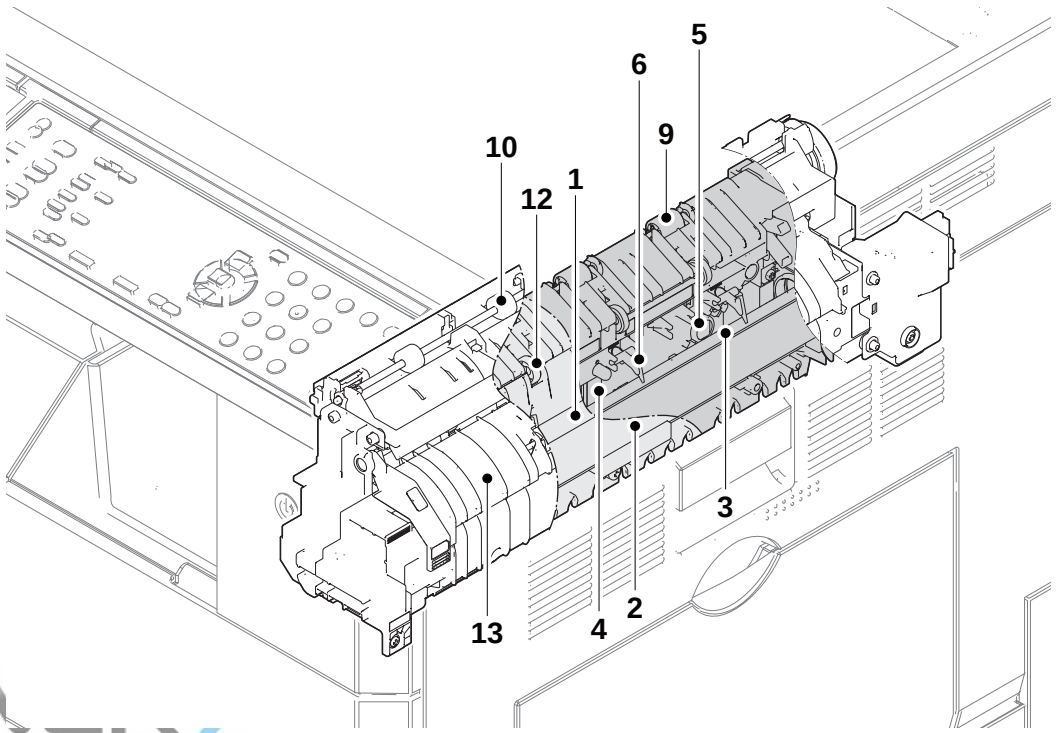

Figure 1-5-80

www.tonerplus.com.ua

[Control block diagram]

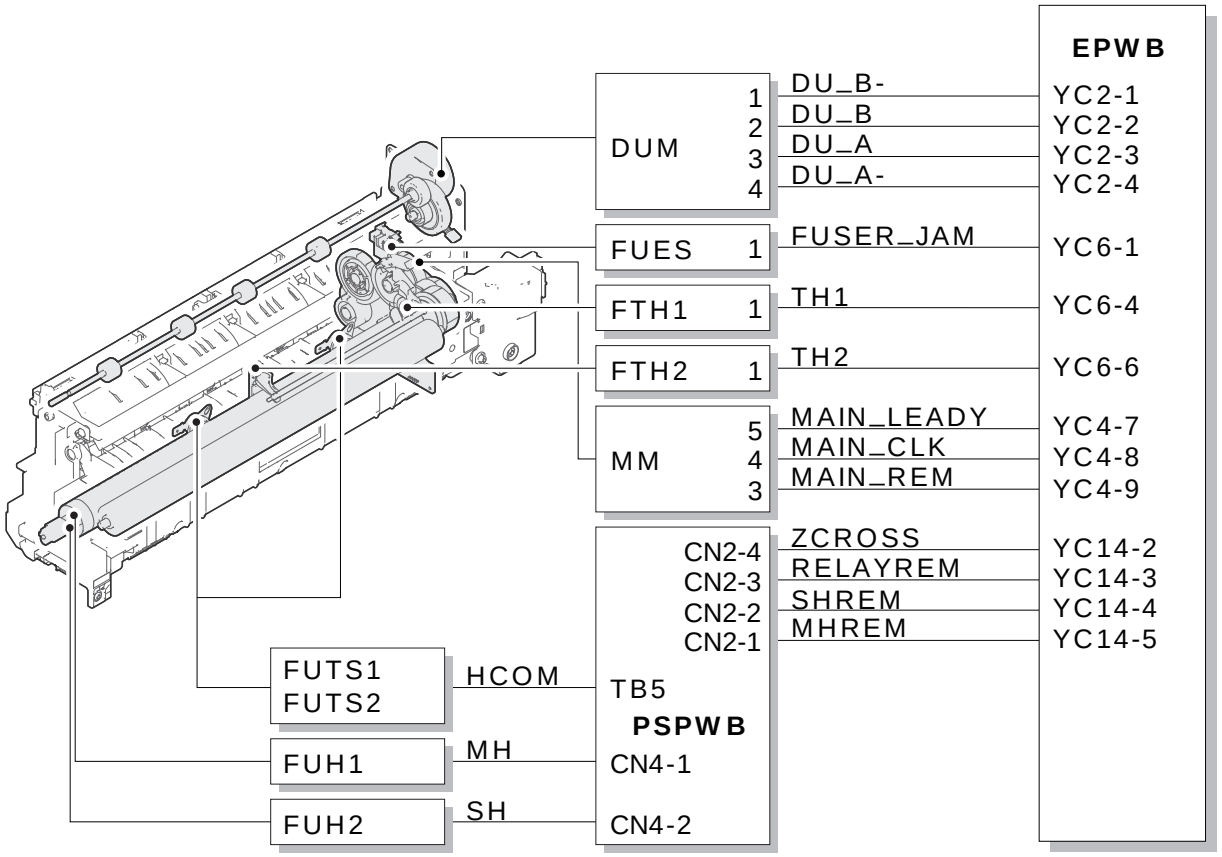

Figure 1-5-81

TONER
www.tonerplus.com.ua

(1) Detaching and refitting the fuser unit

Procedure

1. Open the right cover.

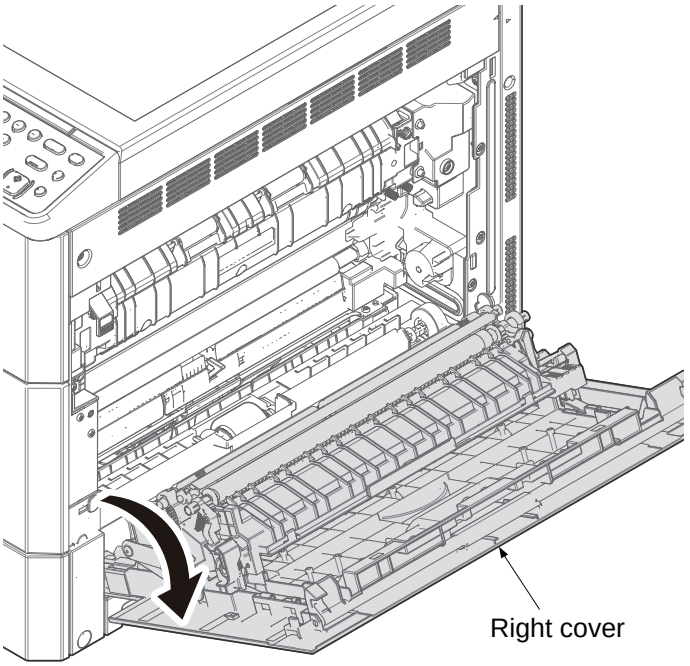

Figure 1-5-82

2. Remove the screw and then remove the electric wire cover.
3. Remove the connector A and connector B.

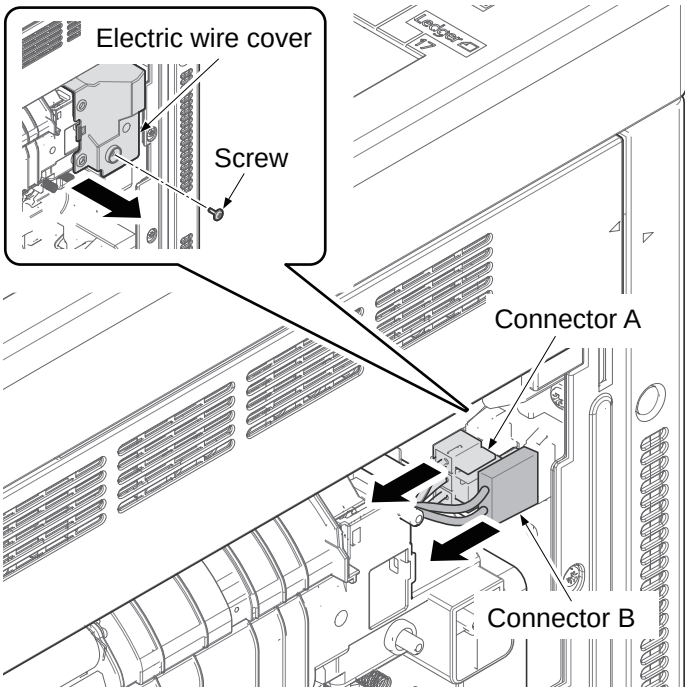

Figure 1-5-83

TONER
www.tonerplus.com.ua

4. Remove two screws.
5. Remove the fuser unit by pulling forward.
6. Check or replace the fuser unit and refit all the removed parts.

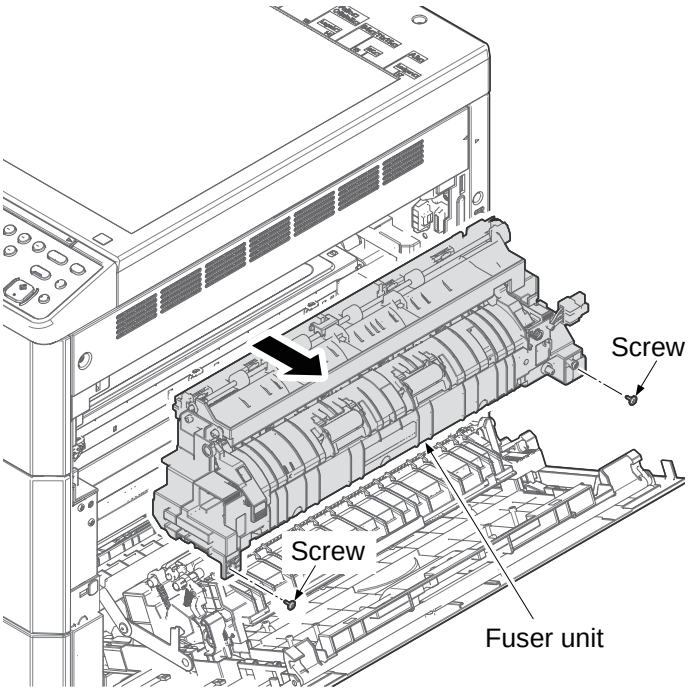

Figure 1-5-84

*: Pull out with the part of the account of the right for high temperature.

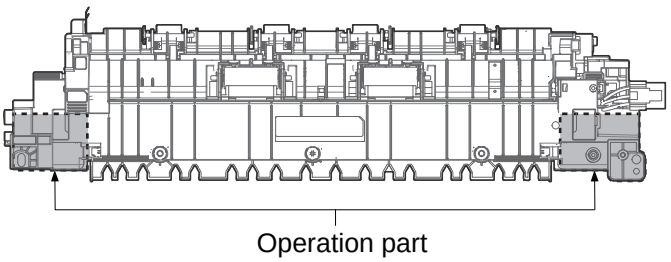

Figure 1-5-85

TONER
www.tonerplus.com.ua

1-5-8 Duplex conveying section (option)

The duplex conveying section consists of conveying path which sends the paper sent from the eject/feedshift section to the paper feed/conveying section when duplex printing.

[Component formation]

1. DU feed roller
2. DU feed pulley
3. DU feed pulley B
4. DU base
5. DU left guide

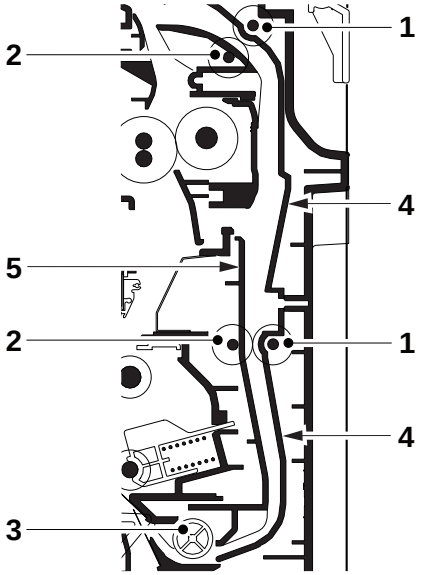

Figure 1-5-86

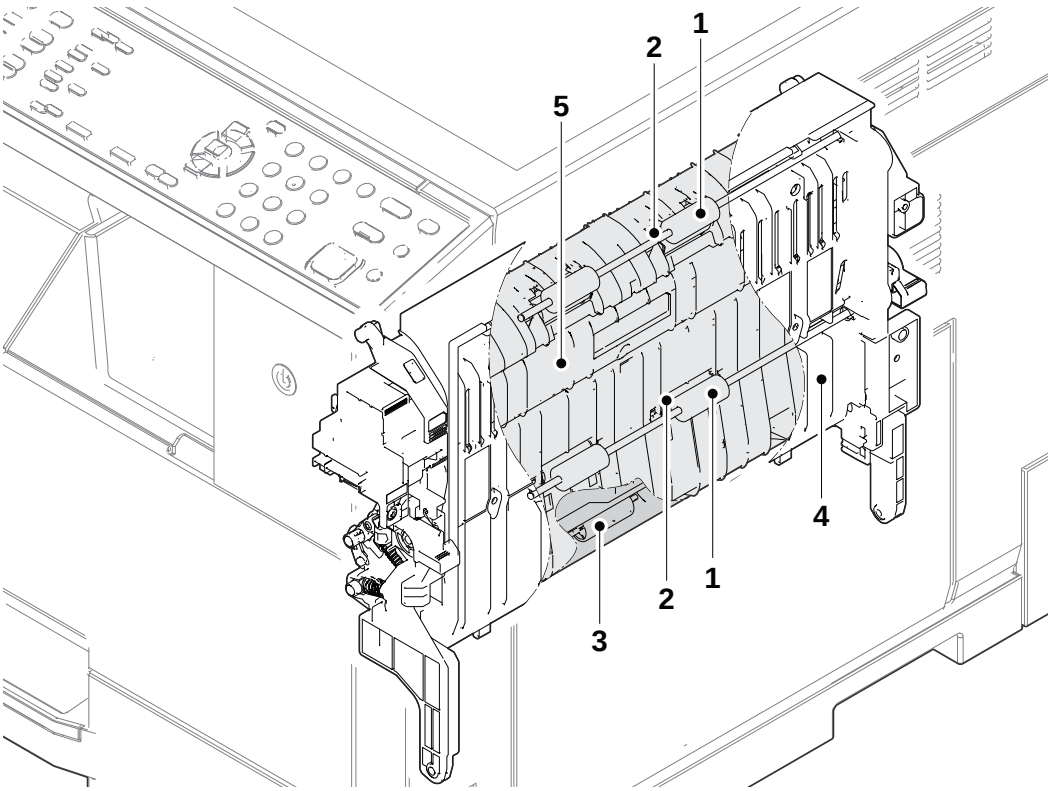

Figure 1-5-87

TONER
www.tonerplus.com.ua

[Control block diagram]

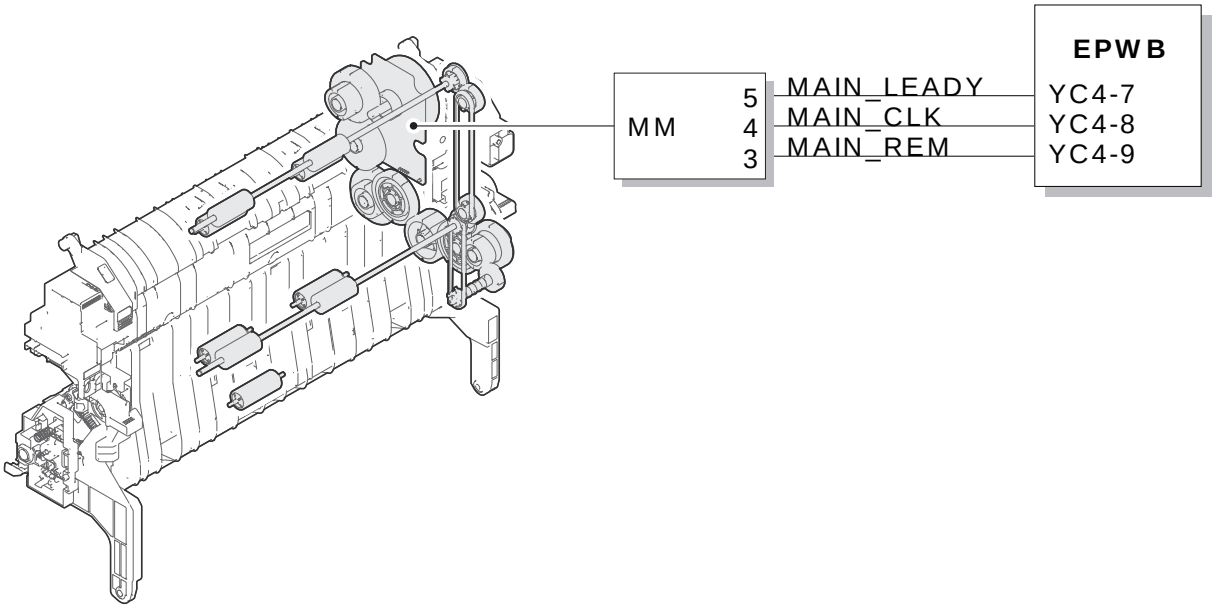

Figure 1-5-88

TONER
www.tonerplus.com.ua

(1) Detaching and refitting the duplex conveying unit

Procedure

1. Open the right cover.

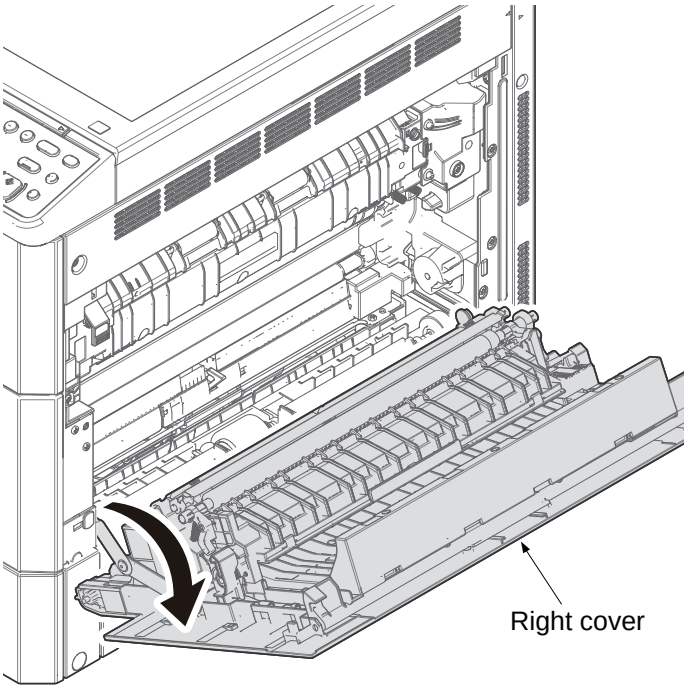

Figure 1-5-89

2. Close the conveying unit.
3. Raise the fulcrum axis up.

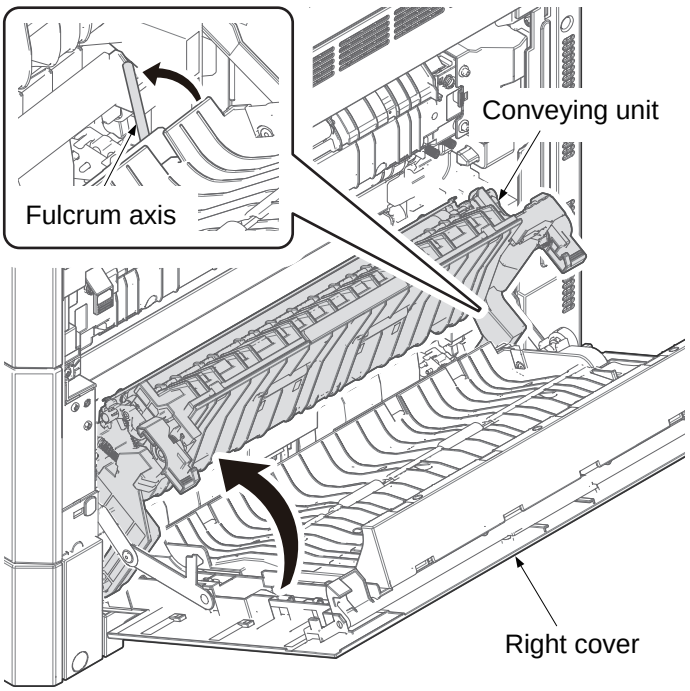

Figure 1-5-90

TONER
www.tonerplus.com.ua

4. Unhook four hooks of the duplex unit from the right cover.
5. Remove two screws from the duplex unit.

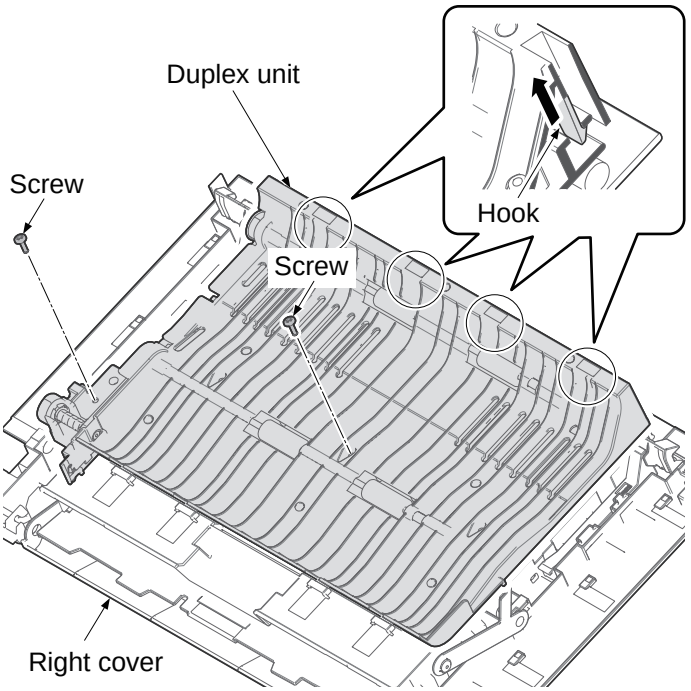

Figure 1-5-91

6. Pull out the projection of the duplex unit from four hooks of the right cover.
7. Check or replace the duplex unit and refit all the removed parts.

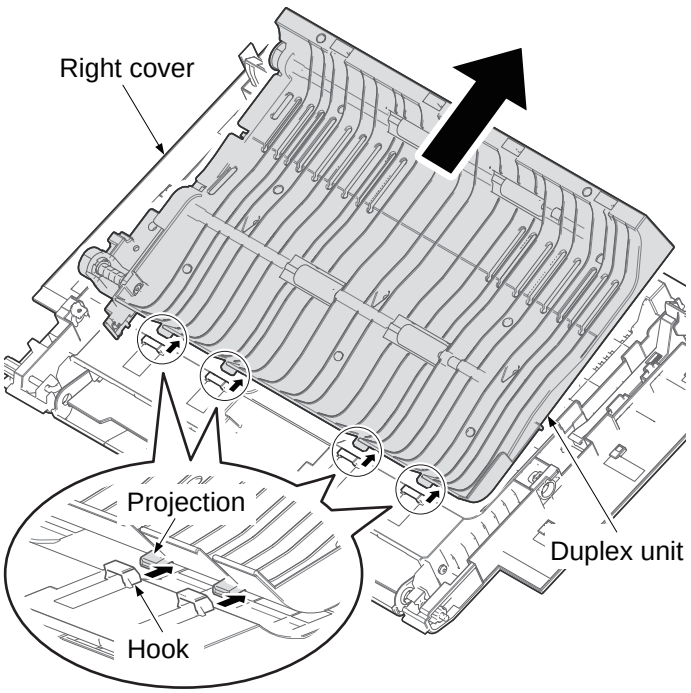

Figure 1-5-92

TONER
www.tonerplus.com.ua

1-5-9 Drive section

[Component formation]

1. Main motor
2. Paperfeed drive gear (clutch)
3. Registration drive gear (clutch)
4. Drum drive gear
5. Developer drive gear
6. Fuser drive gear
7. MP paper feed drive gear
8. MP solenoid

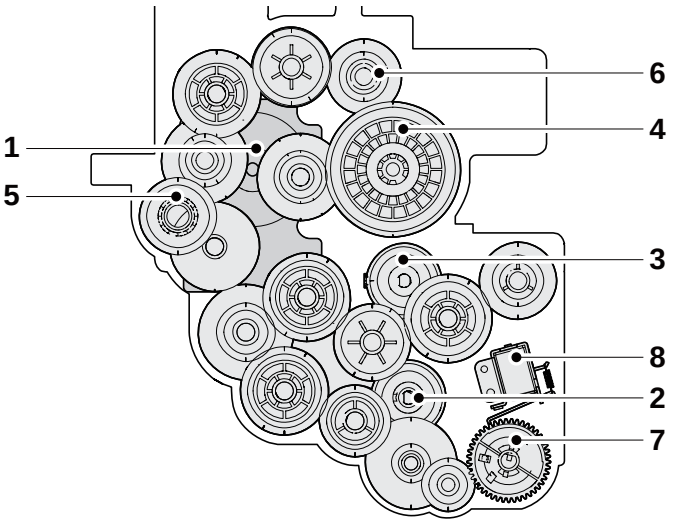

Figure 1-5-93

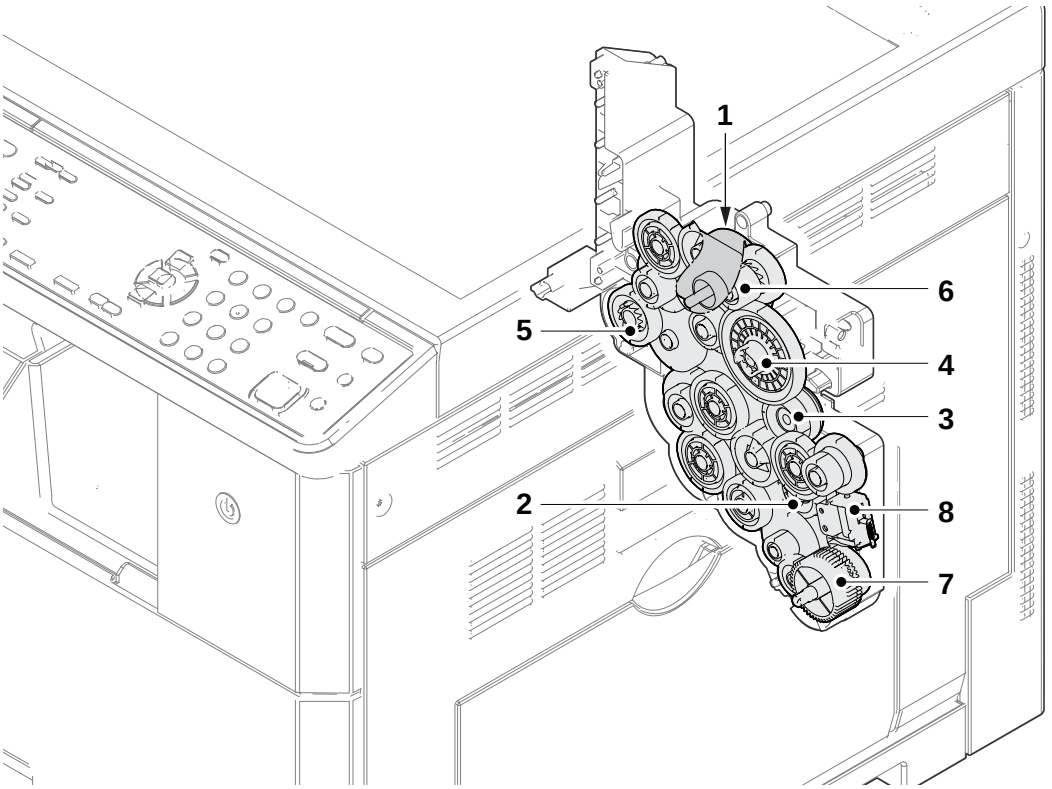

Figure 1-5-94

TONER
www.tonerplus.com.ua

[Control block diagram]

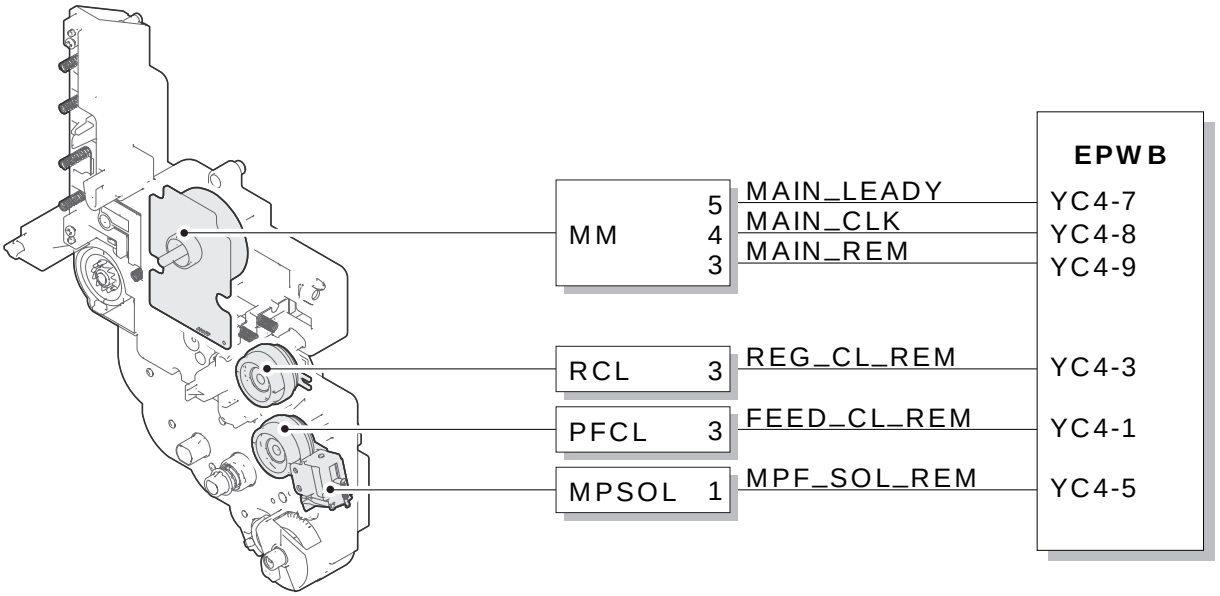

Figure 1-5-95

TONER
www.tonerplus.com.ua

(1) Detaching and refitting the drive unit

Procedure

1. Remove the cassette from the main unit by pulling forward.

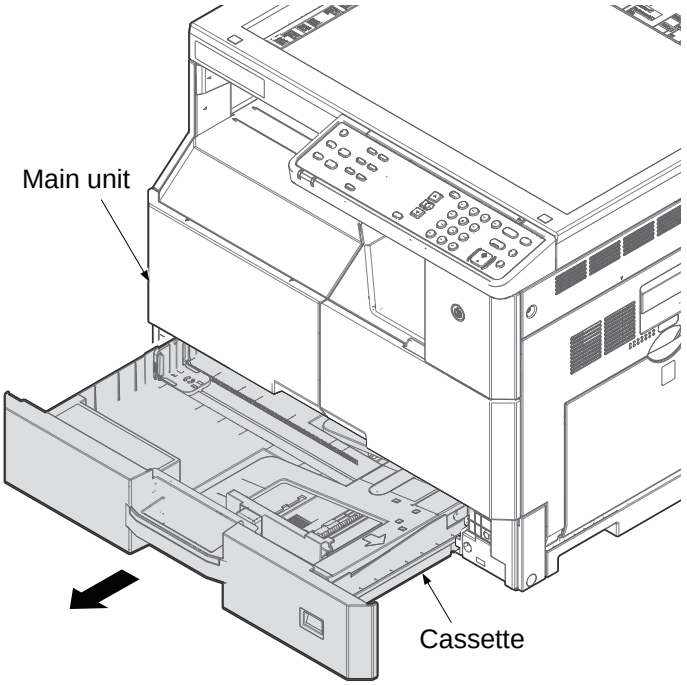

Figure 1-5-96

2. Remove the screw.
3. Remove the primary paper feed unit from main unit by pulling forward.

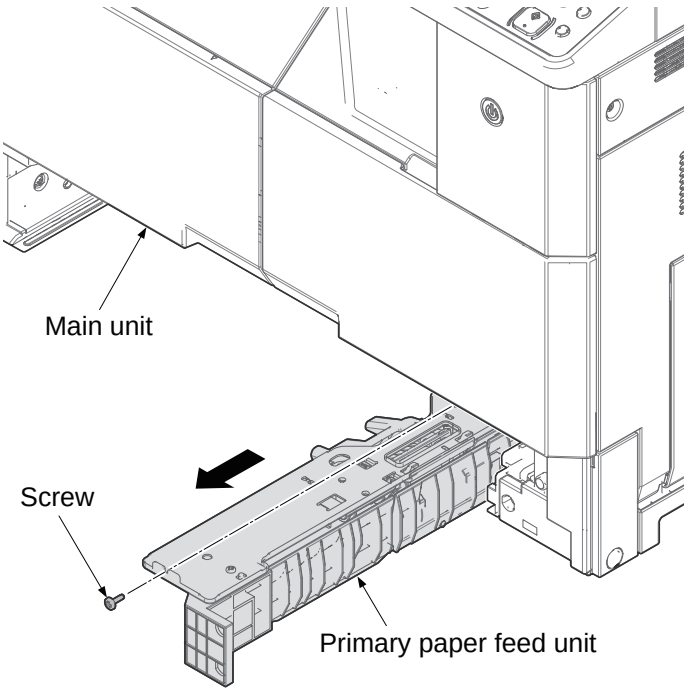

Figure 1-5-97

TONER
www.tonerplus.com.ua

4. Open the front cover.

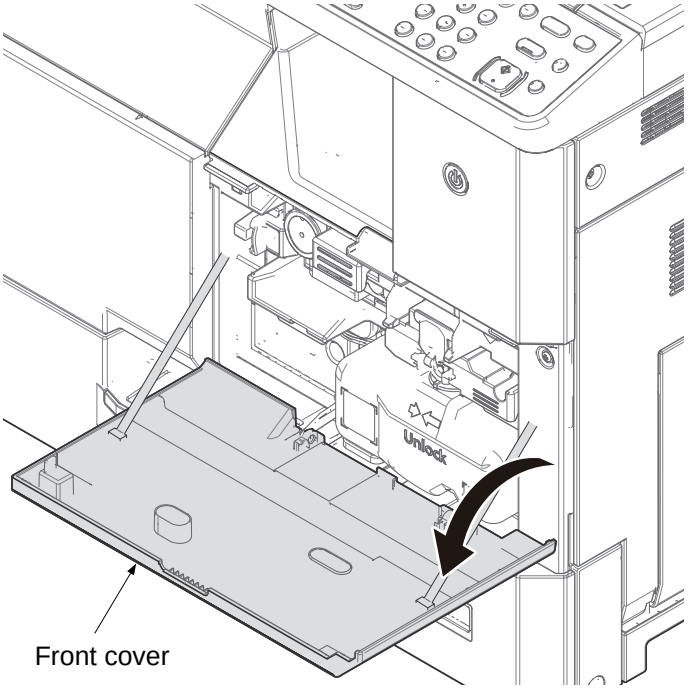

Figure 1-5-98

5. Release it by pinching the lock lever and then remove the waste toner box forward.

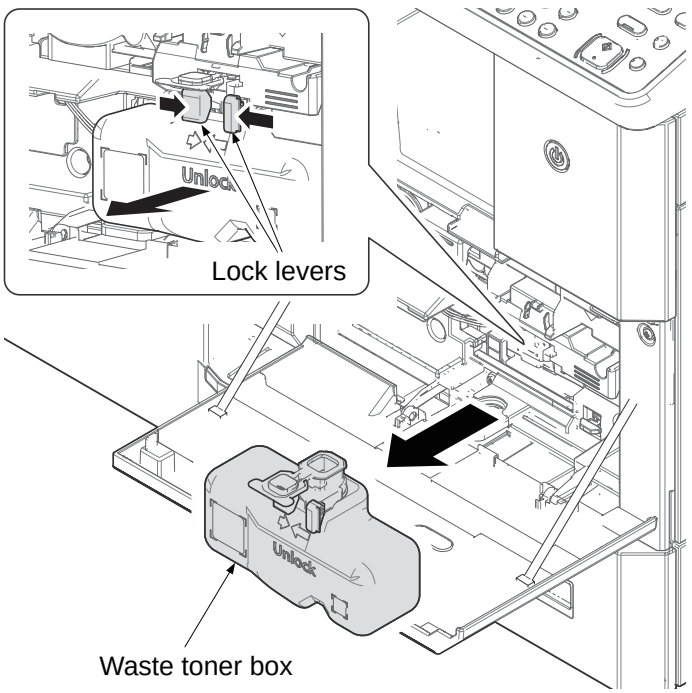

Figure 1-5-99

TONER
www.tonerplus.com.ua

6. Pull out the registration roller cleaner by picking up the knob.
*: Pull out calmly not to scatter paper powder over the circumference.

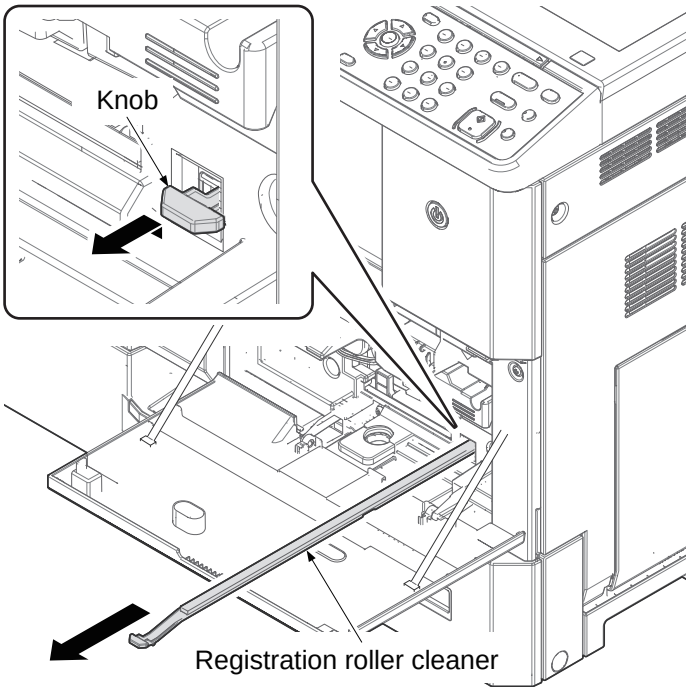

Figure 1-5-100

7. Release the lock lever by sliding to left direction.
8. Pull out the toner container.

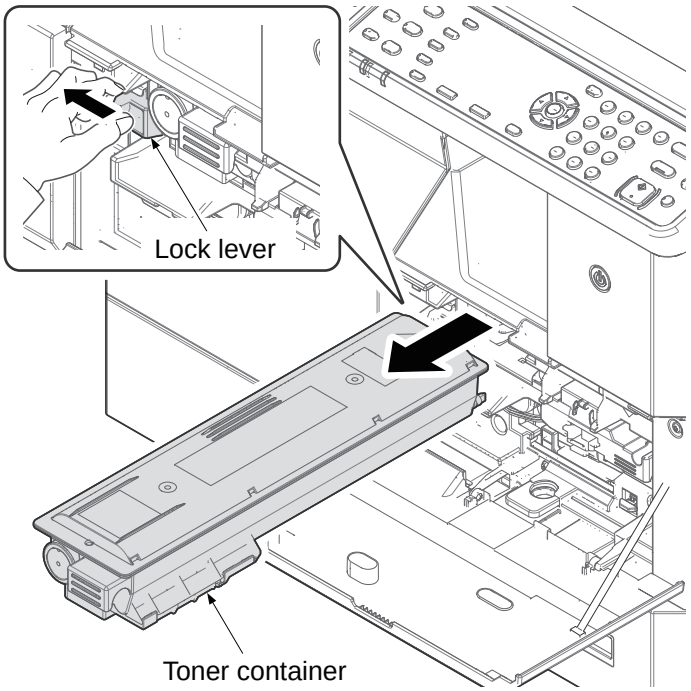

Figure 1-5-101

TONER
www.tonerplus.com.ua

9. Remove the electric wire cover by releasing the lock lever.
10. Remove the developer electric wire connector.

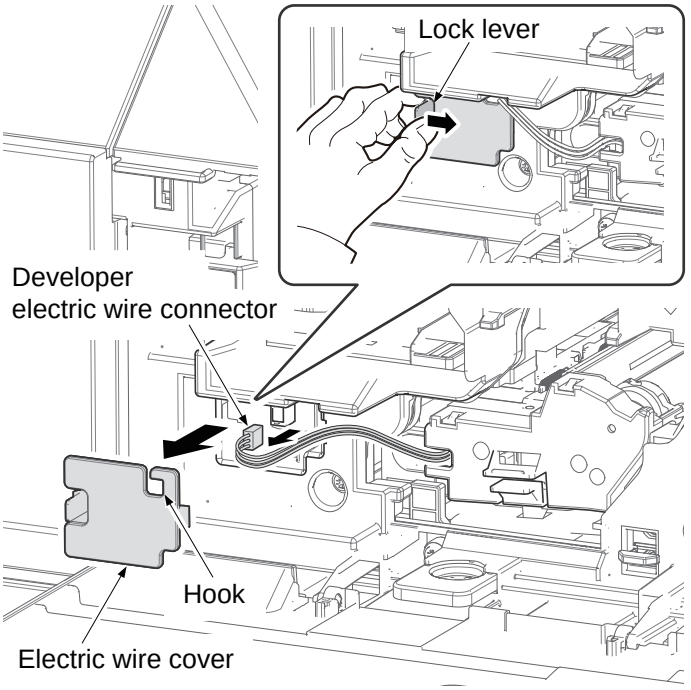

Figure 1-5-102

11. Remove the screw and then pull the developer evacuation lever forward.
12. Remove the developer unit from main unit by pulling forward.

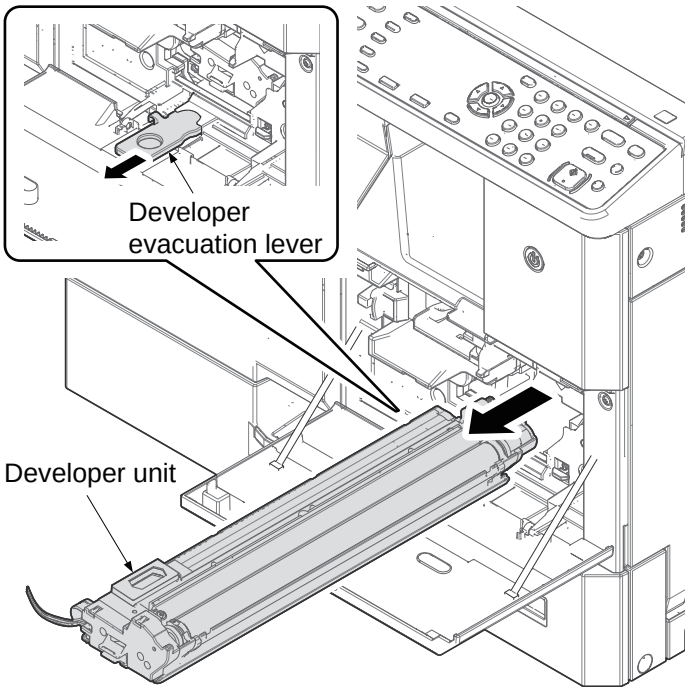

Figure 1-5-103

TONER
www.tonerplus.com.ua

13. Open the right cover.

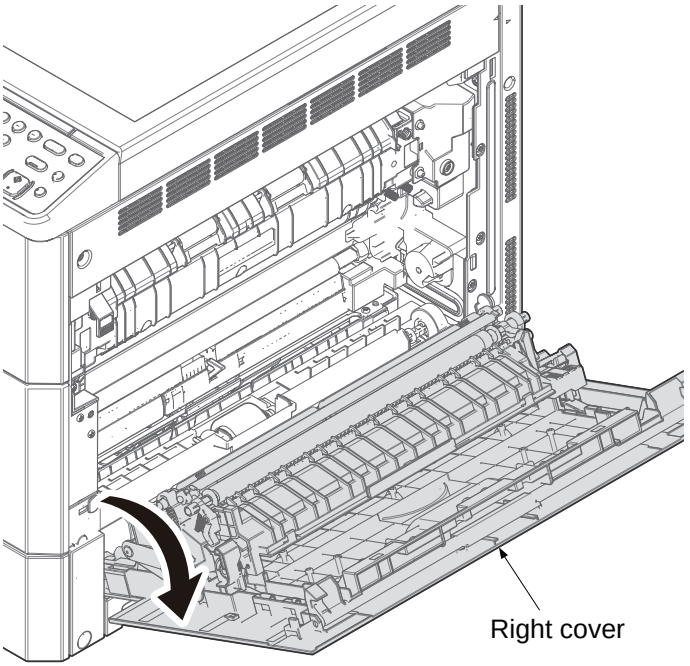

Figure 1-5-104

14. Remove the screw.
15. Remove the drum unit by pulling it forward.
    *: Be careful to not touch a drum or not to hit.

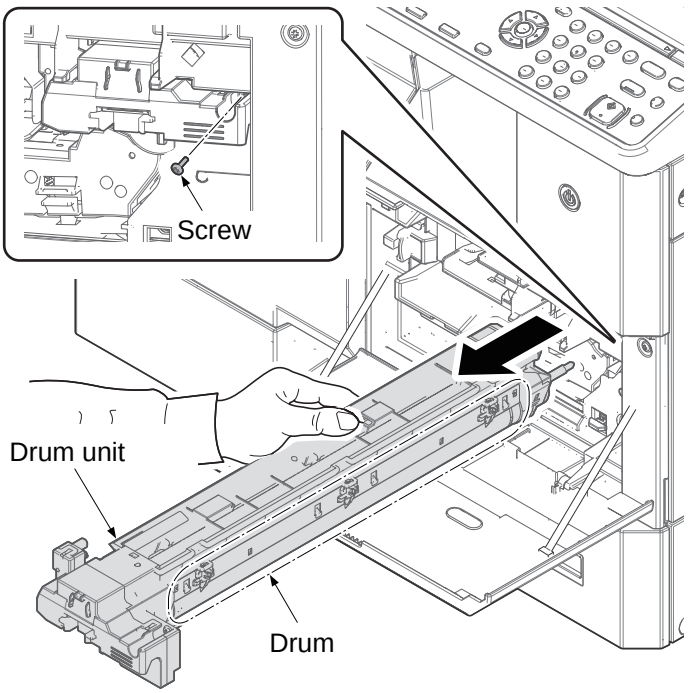

Figure 1-5-105

TONER
www.tonerplus.com.ua

16. Remove the electric wire cover.
17. Remove the connector A and the connector B.

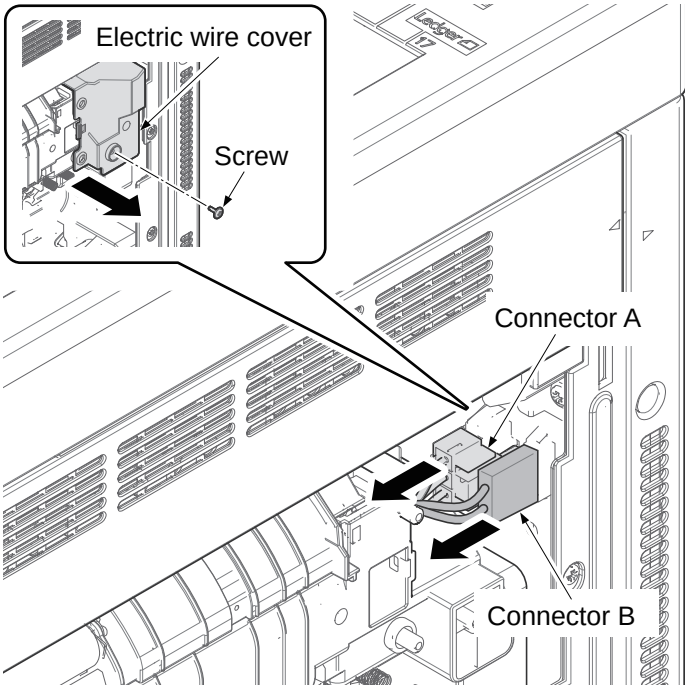

Figure 1-5-106

18. Remove two screws.
19. Remove the fuser unit from the main unit by pulling it forward.
20. Check or replace the fuser unit and refit all the removed parts.

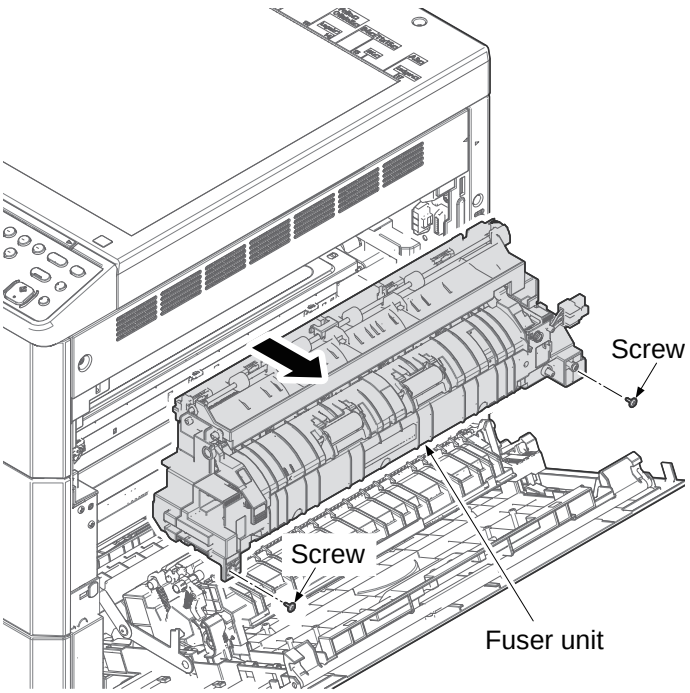

Figure 1-5-107

TONER
www.tonerplus.com.ua

*: Pull out with operation part of a figure for high temperature.

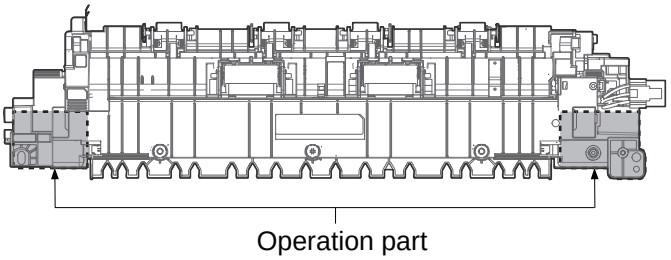

Figure 1-5-108

21. Remove seven screws.
22. Remove the rear cover by pulling upward and releaseing three hooks.

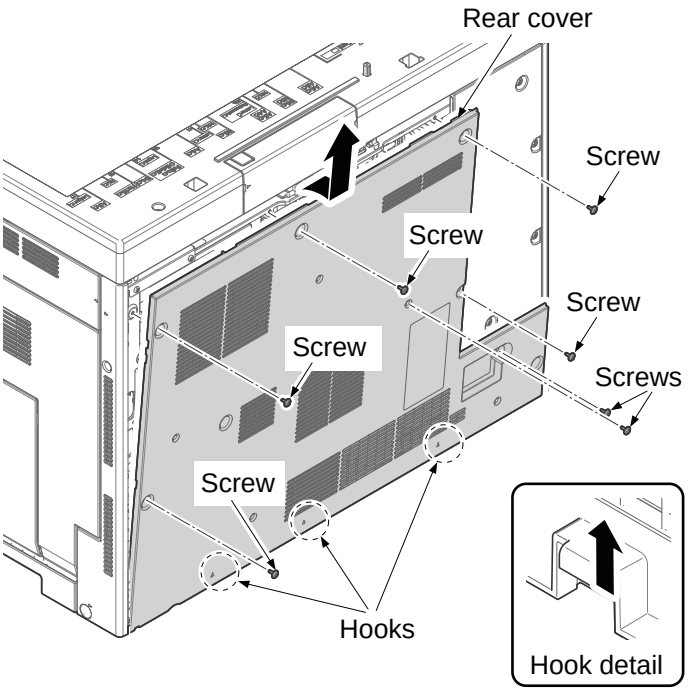

Figure 1-5-109

TONER
www.tonerplus.com.ua

23. Remove the screw.
24. Unhook two hooks A using a flat screw-driver.
25. Remove the right upper cover by sliding it downward and releasing six hooks B.

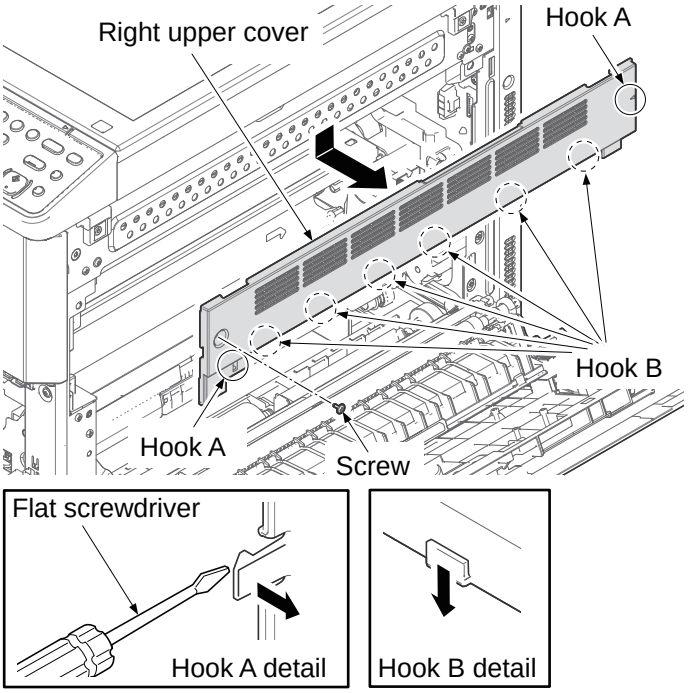

Figure 1-5-110

26. Release three projections by twisting the right rear cover.
27. Remove the right rear cover by sliding it to the right and releasing three hooks.

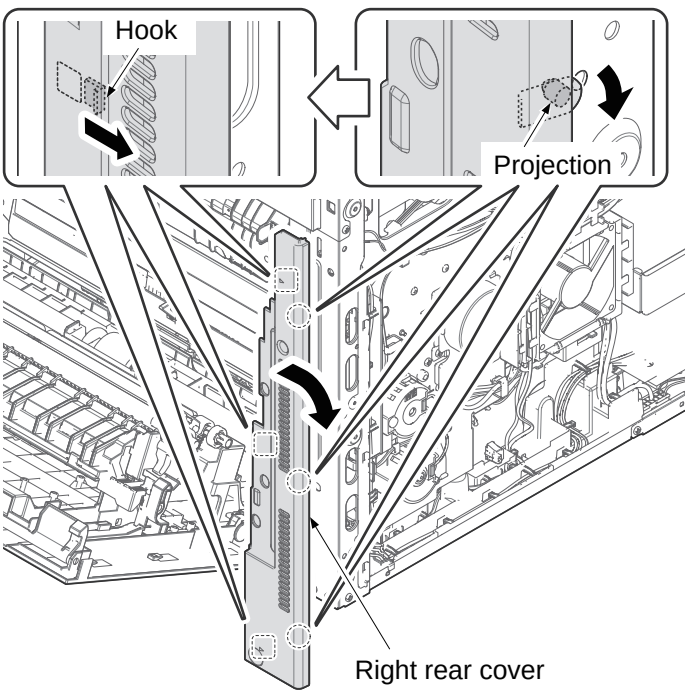

Figure 1-5-111

TONER
www.tonerplus.com.ua

28. Remove eight screws.
29. Remove the left cover by pulling upward and releasing four hooks.

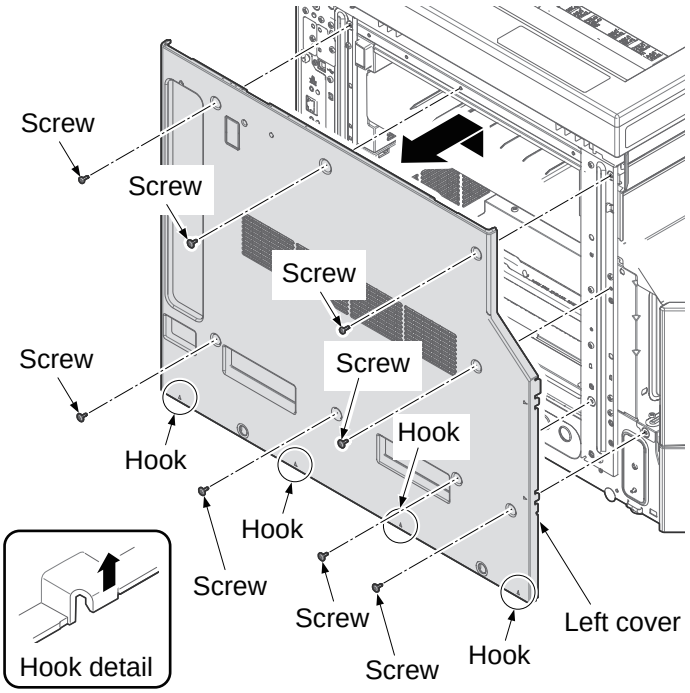

Figure 1-5-112

30. Unhook two hooks using flat screw driver and then remove the front left cover by pulling upward.

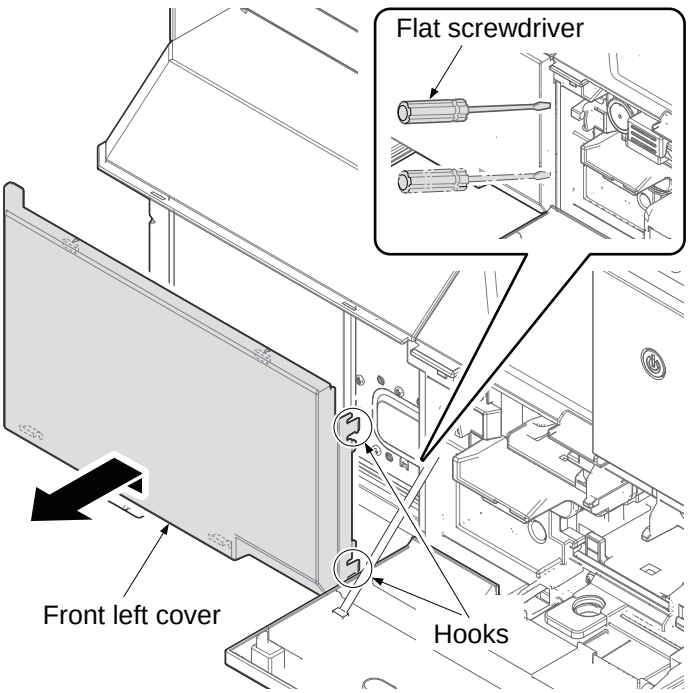

Figure 1-5-113

TONER
www.tonerplus.com.ua

31. Remove the left tray.

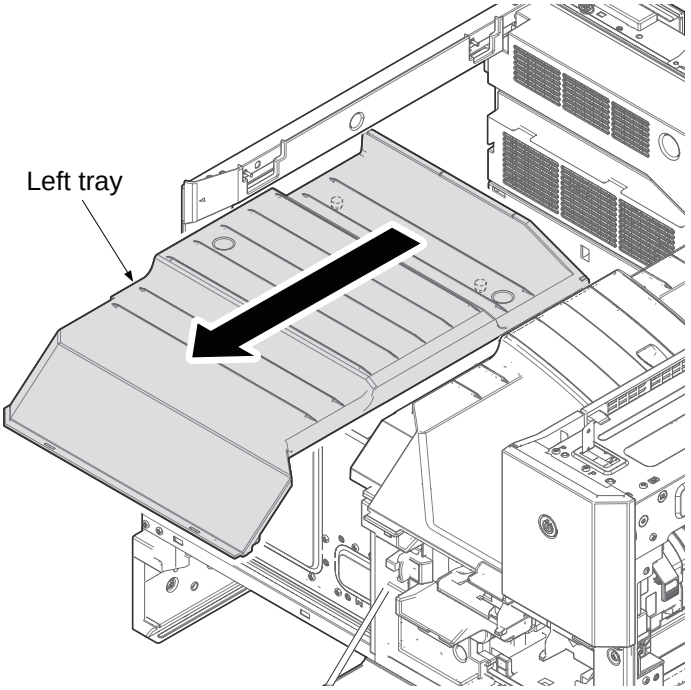

Figure 1-5-114

32. Remove a screw.
33. Remove the right tray.

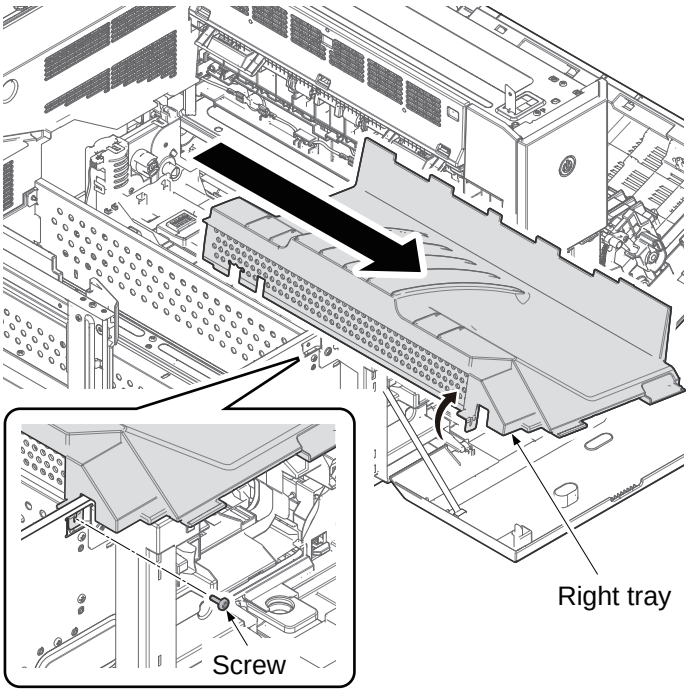

Figure 1-5-115

TONER
www.tonerplus.com.ua

34. Remove two connectors.

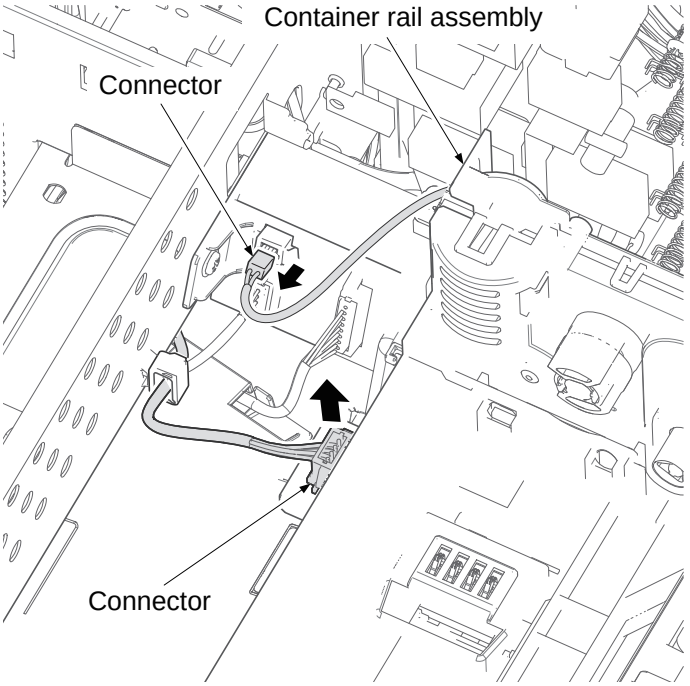

Figure 1-5-116

35. Remove a screw.
36. Remove it forward after raising a little the front side of the container rail assembly.

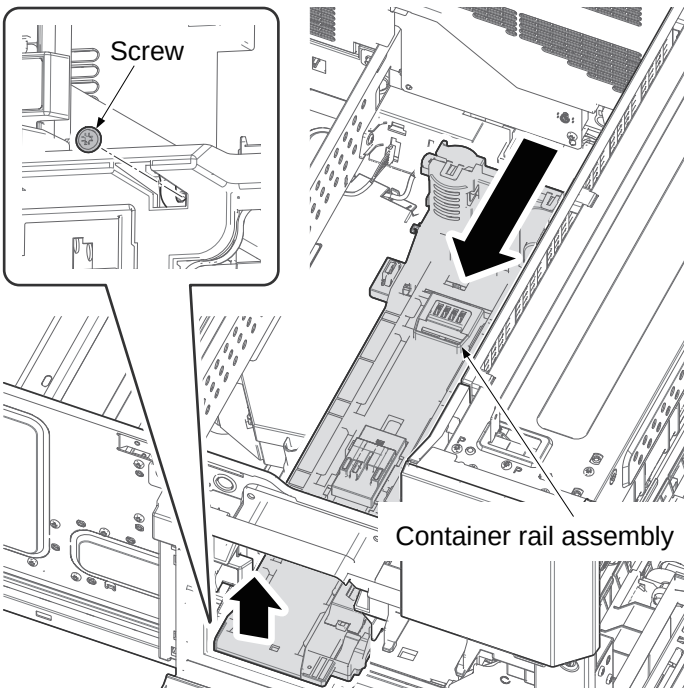

Figure 1-5-117

TONER
www.tonerplus.com.ua

37. Remove the screw.
38. Remove the exit rear cover forward with releasing two projections by lifting it up.

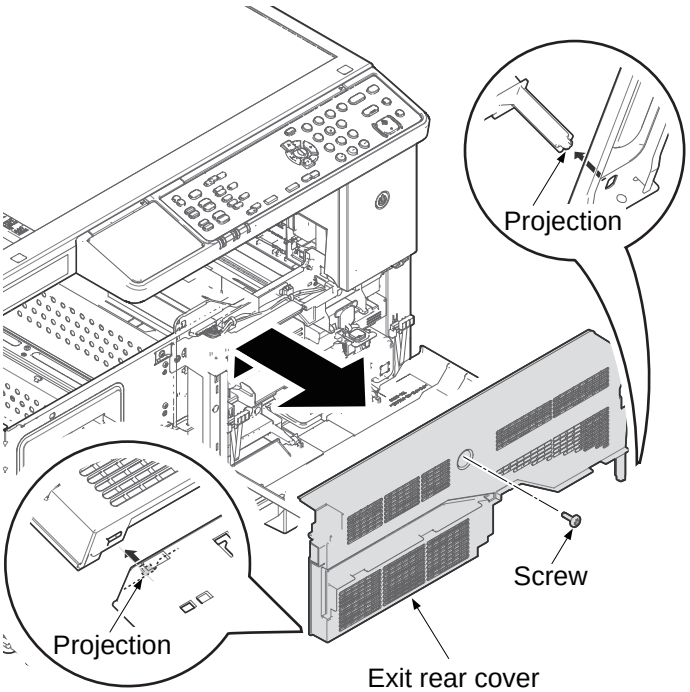

Figure 1-5-118

39. Remove the connector from the high voltage PWB.
40. Remove three screws and unhook the hook and then remove the high voltage PWB.
41. Check or replace the high voltage PWB and refit all the removed parts.

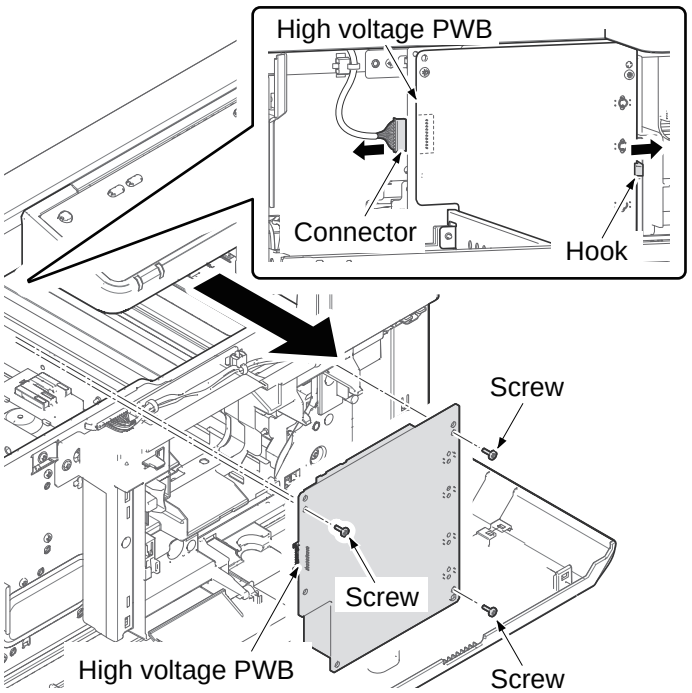

Figure 1-5-119

TONER
www.tonerplus.com.ua

42. Remove four connectors from the clutches and the motor.
43. Remove the wire guide by releasing two projection parts of the wire guide and lifting it upwards.

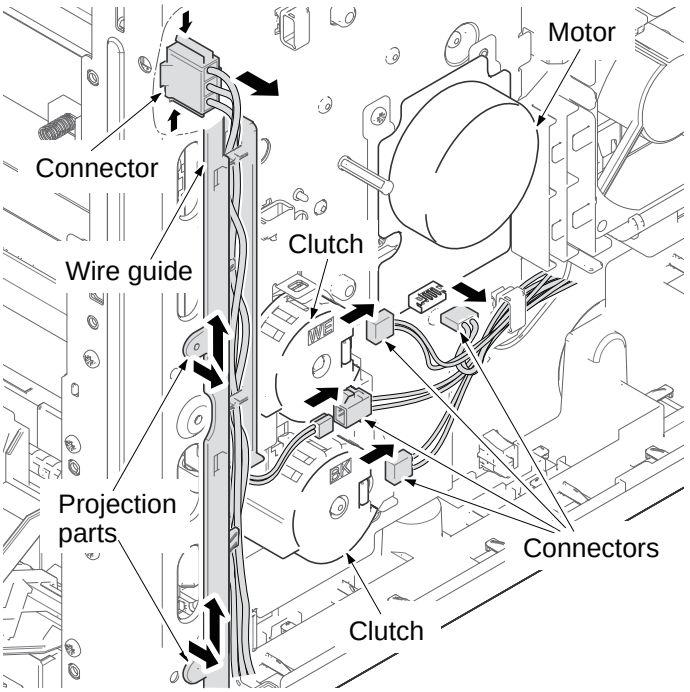

Figure 1-5-120

44. Remove the screw.
45. Remove the clutch cover by unhooking three hooks.
46. Pull two clutches out.
    *: It is not dropping a clutch, when removing a cover.

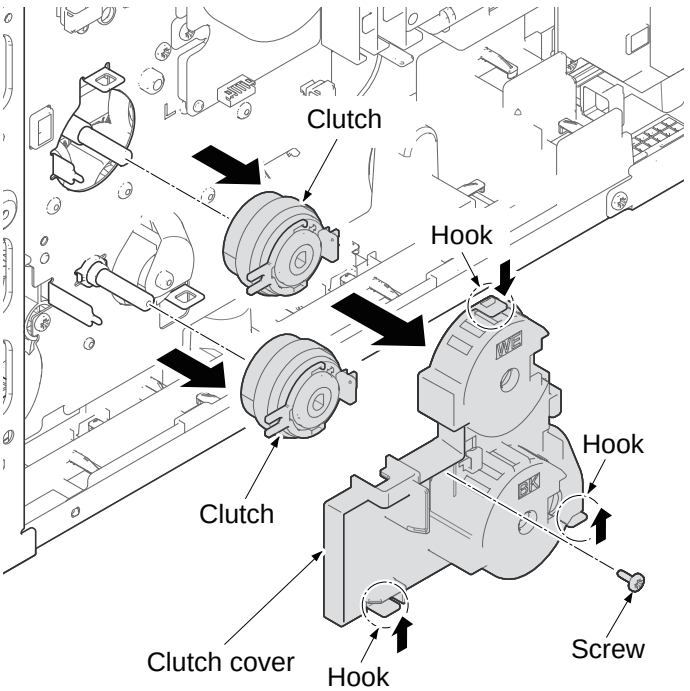

Figure 1-5-121

TONER
www.tonerplus.com.ua

47. Rotate the conveying section upward.
48. Remove two stop ring.
49. Open the strap to each outside.

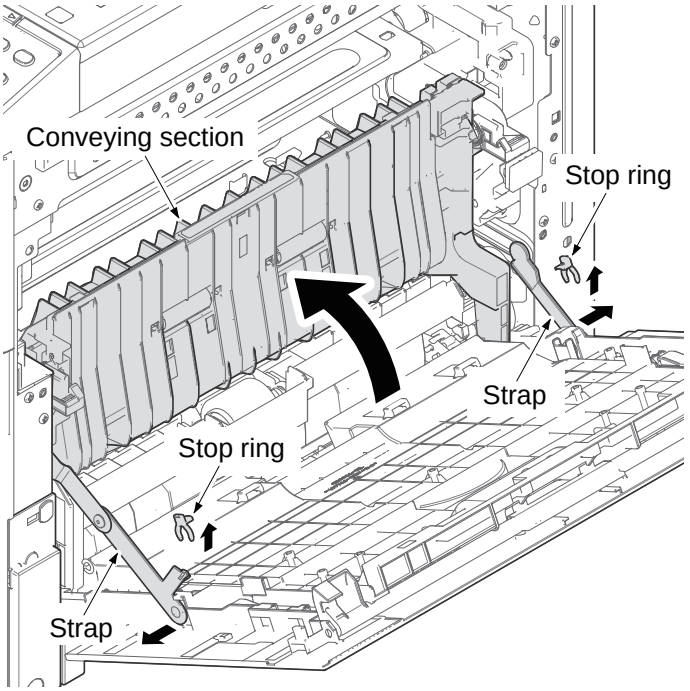

Figure 1-5-122

50. Open the conveying section until limit of the open position.
51. Remove the screw.
52. Remove the left transfer guide forward after slideing it backward.

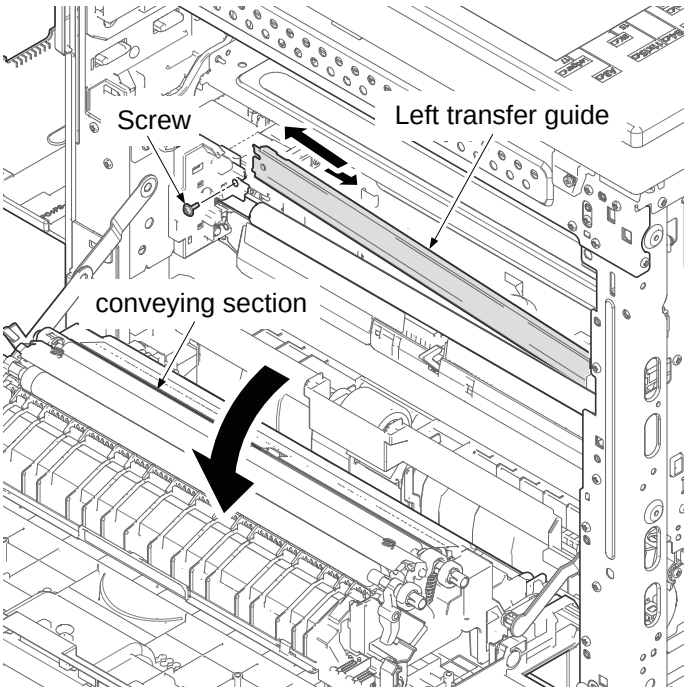

Figure 1-5-123

TONER
www.tonerplus.com.ua

53. Remove the stop ring and slide the gear forward.
54. Remove the registration roller forward after sliding it backward.

*: Be careful to don't drop a bushing, when removing a regist roller.

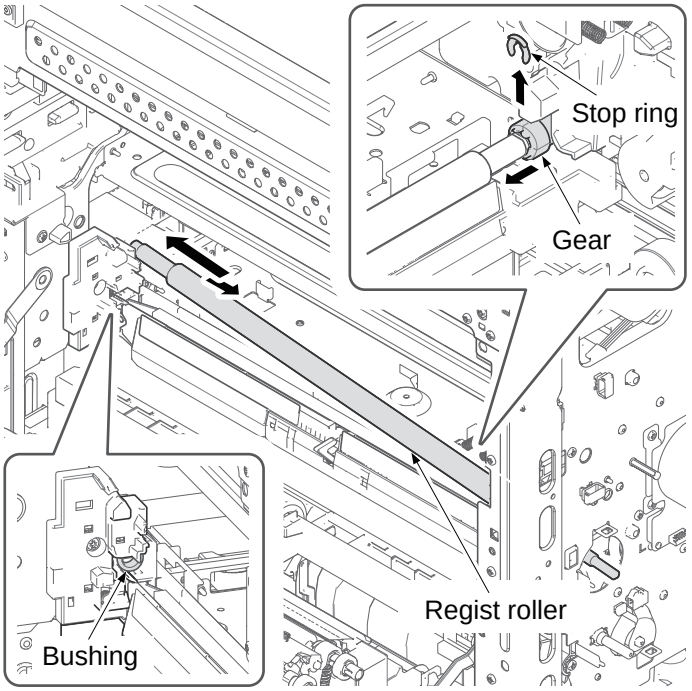

Figure 1-5-124

55. Remove eight connectors.
56. Release five wire saddles and remove the cable tie.

*: Be careful to don't break the switch, when removing two connectors of the A section.

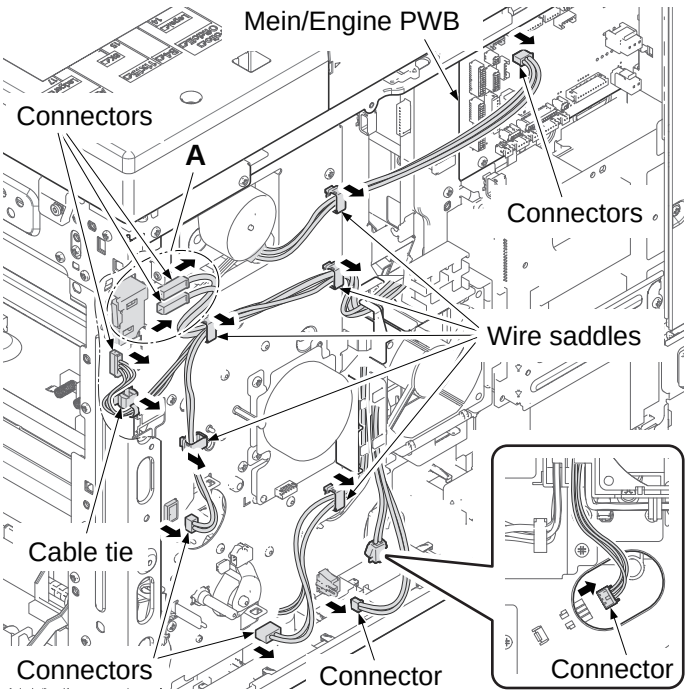

Figure 1-5-125

TONER
www.tonerplus.com.ua

57. Remove two screws
58. Unhook two hooks of the fan assembly.
59. Rotate the fan assembly forward at the care of the back.

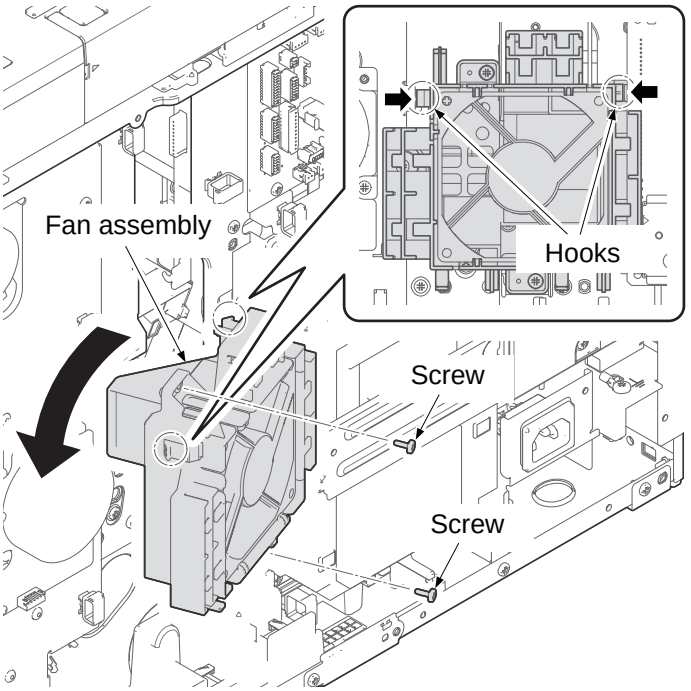

Figure 1-5-126

60. Remove ten screws.
61. Release two projections and remove the rear frame.

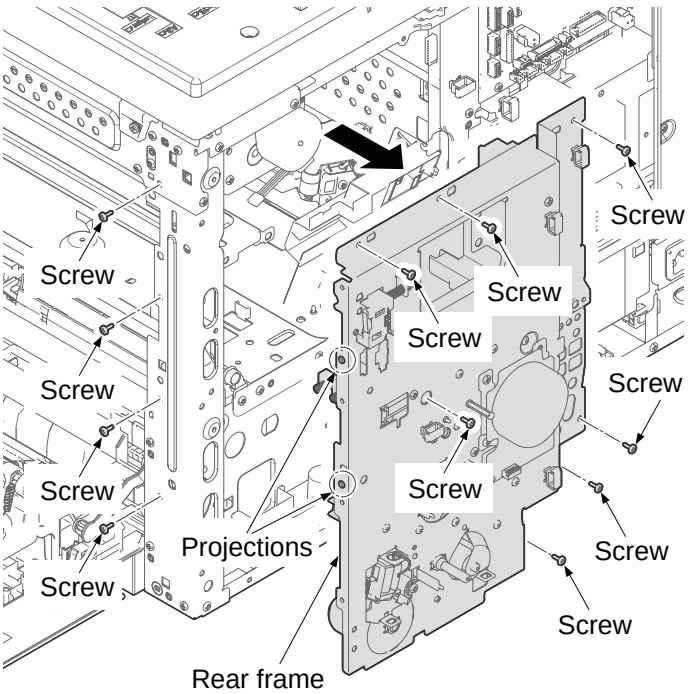

Figure 1-5-127

TONER
www.tonerplus.com.ua

62. Remove three screws and the main motor from the rear frame.
63. Remove five screws and the drive unit from the rear frame.
64. Check or replace the drive unit and refit all the removed parts.

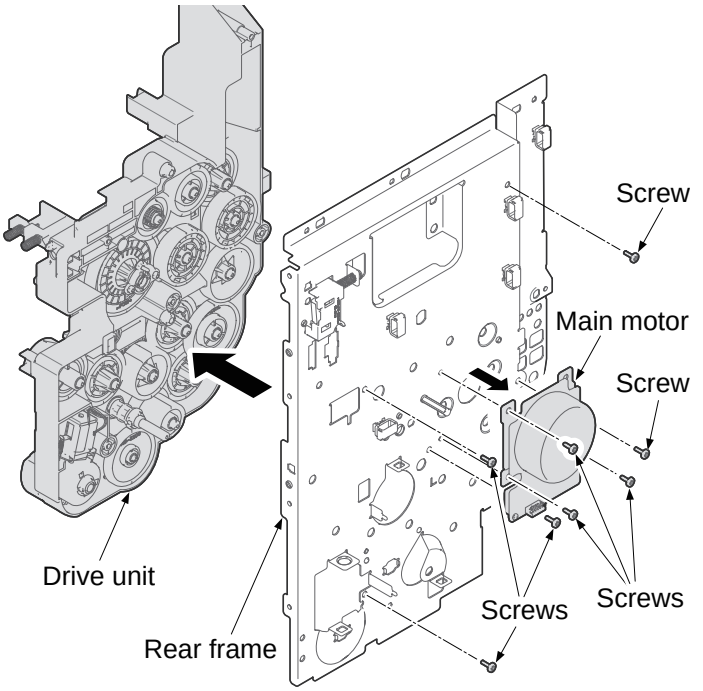

Figure 1-5-128

*: When refitting the rear frame, depress the lift plate not to hit the cam.
Moreover, combine the MP driving shaft and the positioning axis of a drive unit.

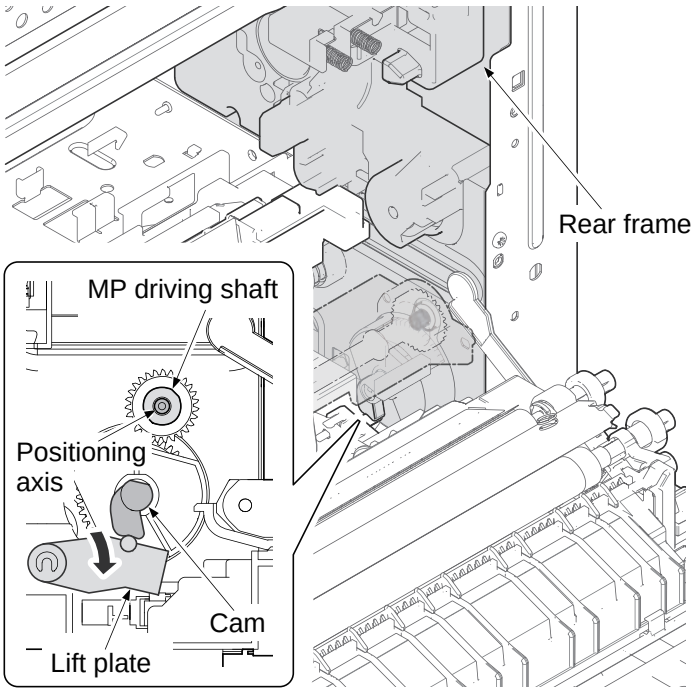

Figure 1-5-129

TONER
www.tonerplus.com.ua

1-5-10 Othes

(1) Detaching and refitting the rear cover

Procedure

1. Remove seven screws.
2. Remove the rear cover by pulling upward and releaseing three hooks.

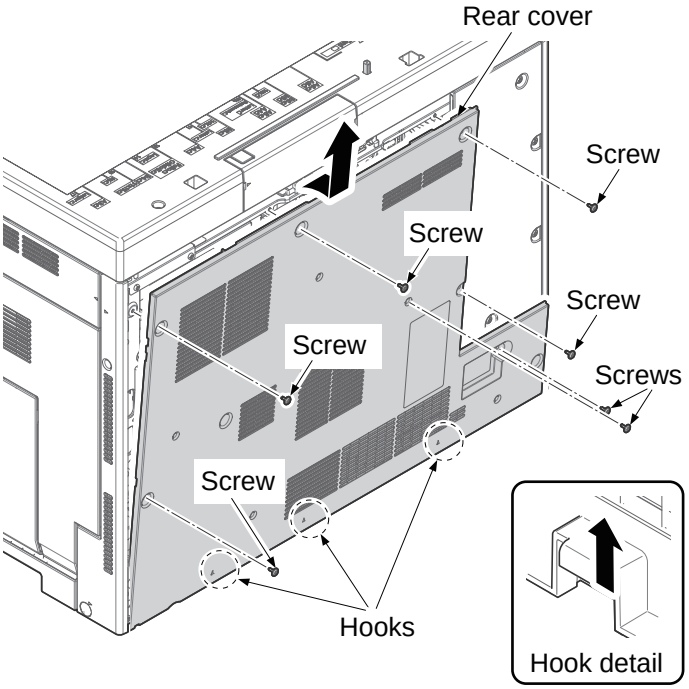

Figure 1-5-130

(2) Detaching and refitting the rear sub cover

Procedure

3. Remove six screws.
4. Remove the rear sub cover.

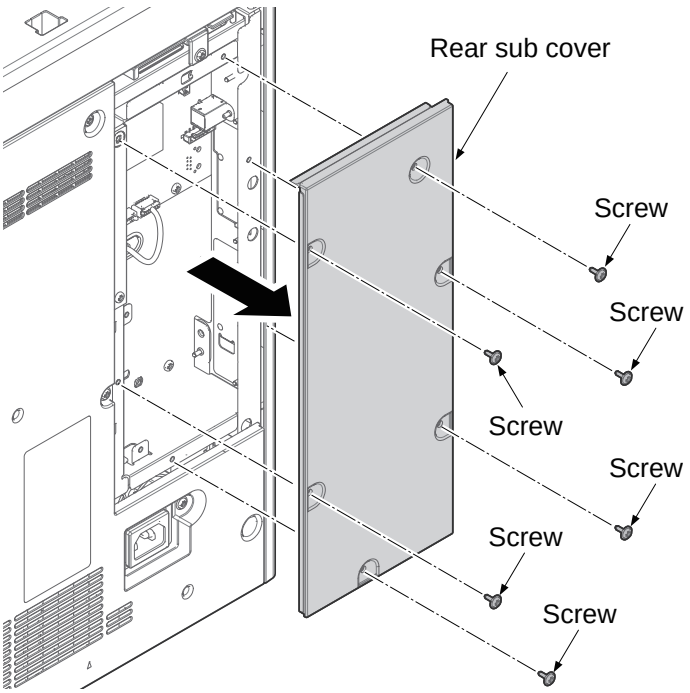

Figure 1-5-131

TONER
www.tonerplus.com.ua

(3) Detaching and refitting the right upper cover

Procedure

1. Open the right cover.
2. remove the screw.

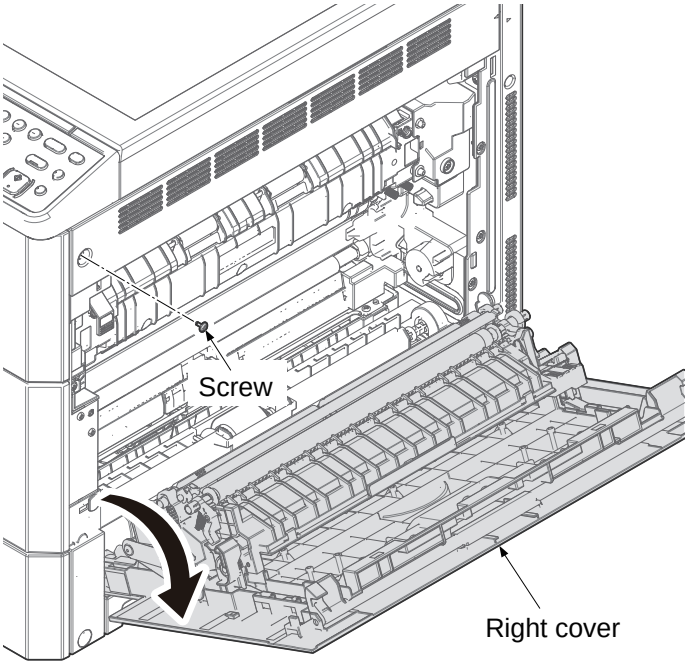

Figure 1-5-132

3. Unhook two hooks A using a flat screw-driver.
4. Remove the right upper cover by sliding it downward and releasing six hooks B.

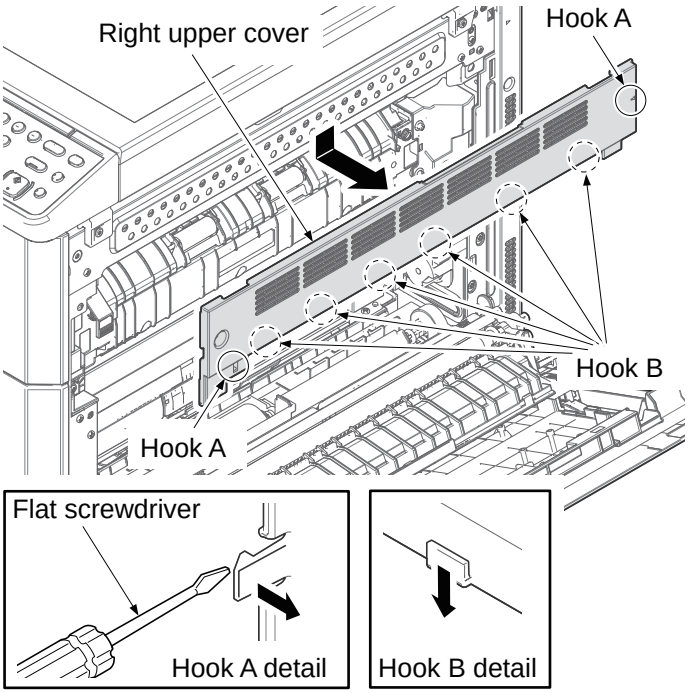

Figure 1-5-133

TONER
www.tonerplus.com.ua

(4) Detaching and refitting the right rear cover

Procedure

5. Release three projections by twisting the right rear cover.
6. Remove the right rear cover by sliding it to the right and releasing three hooks.

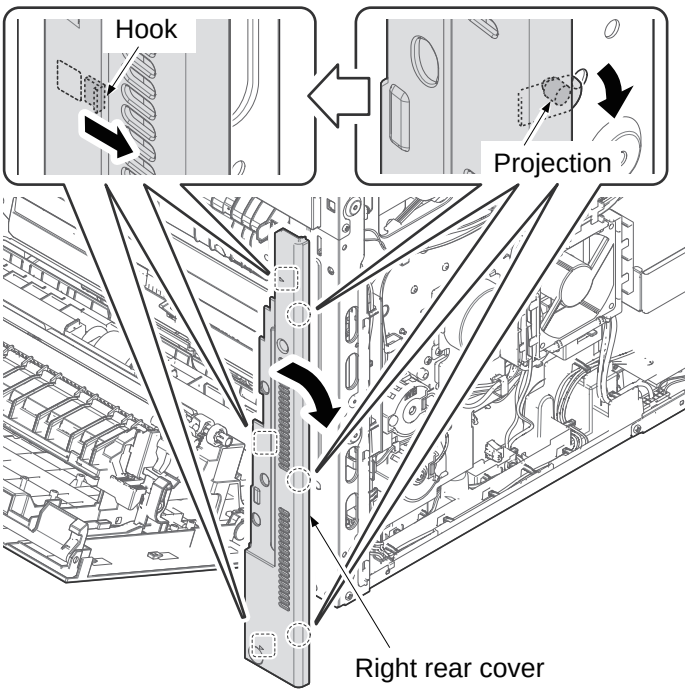

Figure 1-5-134

(5) Detaching and refitting the front upper cover

Procedure

1. Remove the right upper cover.
2. Unhook the hook using flatscrew driver.
3. Remove the front upper cover by pulling it upward and releasing the projection.

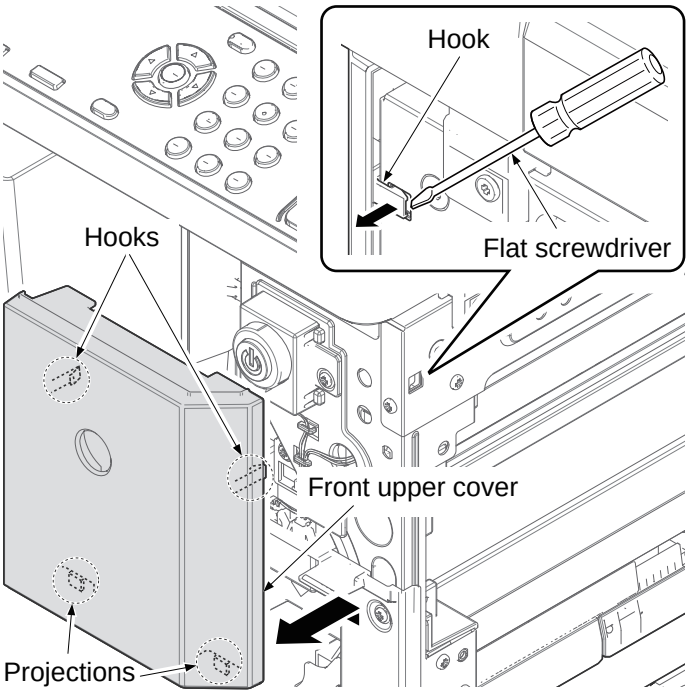

Figure 1-5-135

TONER
www.tonerplus.com.ua

(6) Detaching and refitting the left cover

Procedure

1. Remove eight screws.
2. Remove the left cover by pulling upward and releasing four hooks.

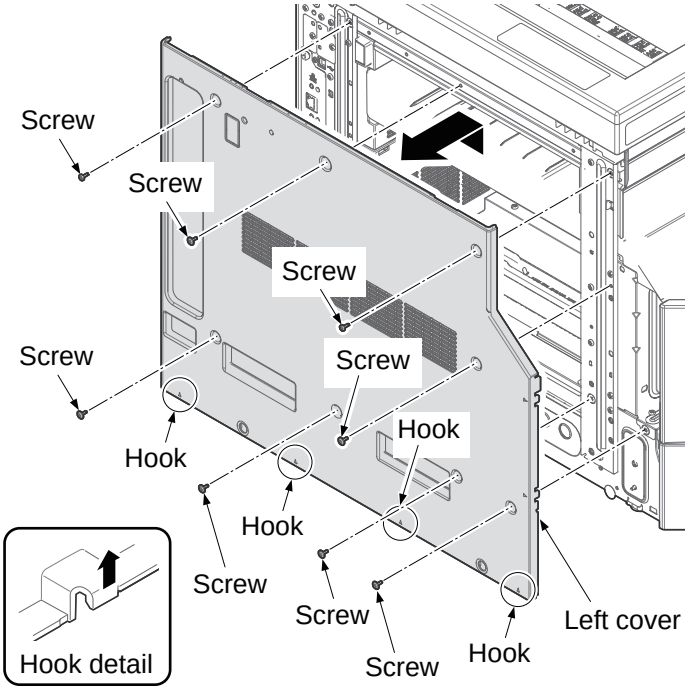

Figure 1-5-136

(7) Detaching and refitting the front left cover

Procedure

1. Unhook two hooks using flat screw driver and then remove the front left cover by pulling it upward.

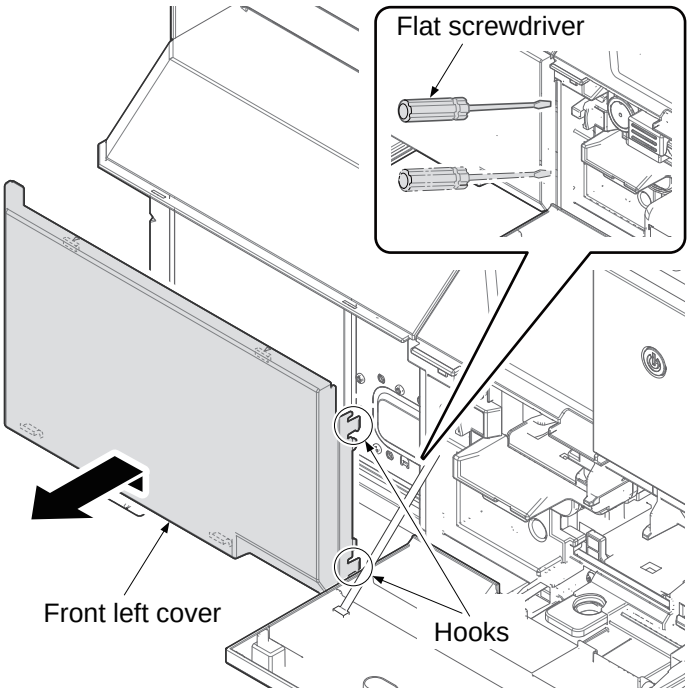

Figure 1-5-137

TONER
www.tonerplus.com.ua

(8) Detaching and refitting the left tray and right tray

Procedure

1. Remove the left tray.

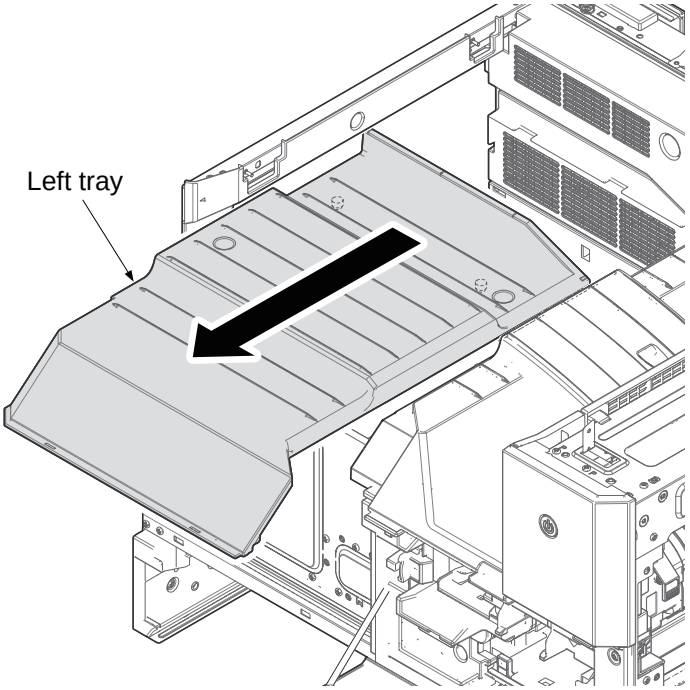

Figure 1-5-138

2. Remove the screw.
3. Remove the right tray.

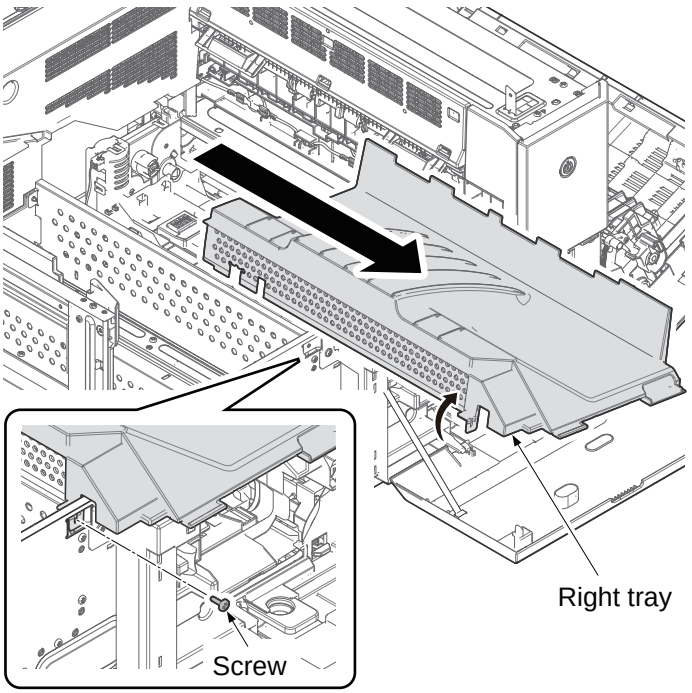

Figure 1-5-139

TONER
www.tonerplus.com.ua

(9) Detaching and refitting the exit rear cover

Pocedure

1. Remove the screw.
2. Remove the exit rear cover forward with releasing two projections by lifting it up.

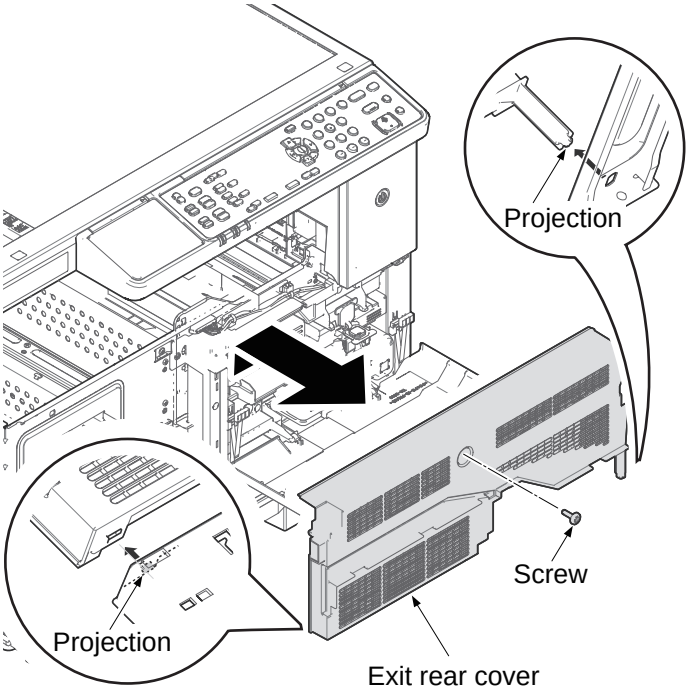

Figure 1-5-140

(10)Detaching and refitting the middle rear cover

Pocedure

1. Remove the screw.
2. Release the projection by sliding the middle rear cover backward.
3. Remove the middle rear cover forward during turning it.

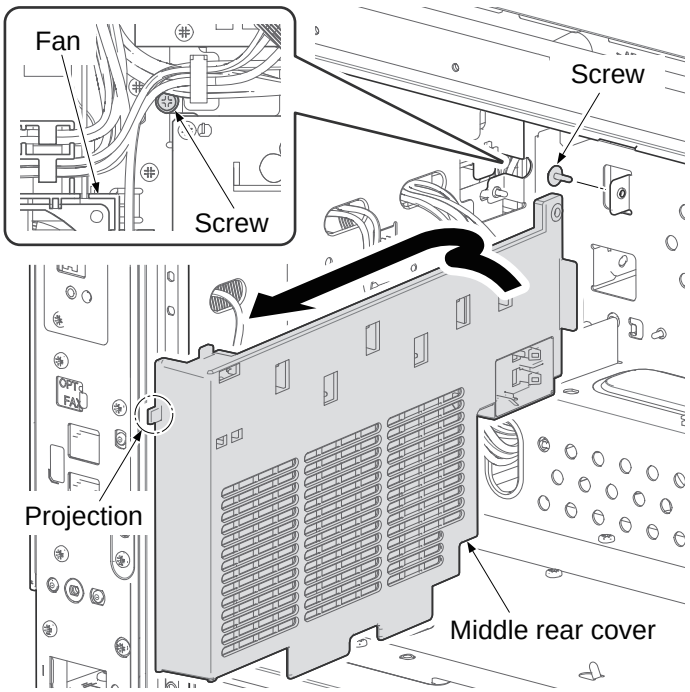

Figure 1-5-141

TONER
www.tonerplus.com.ua

(11)Detaching and refitting the inner cover

Pocedure

1. Remove four screws.
2. Remove the inner cover with the front cover.

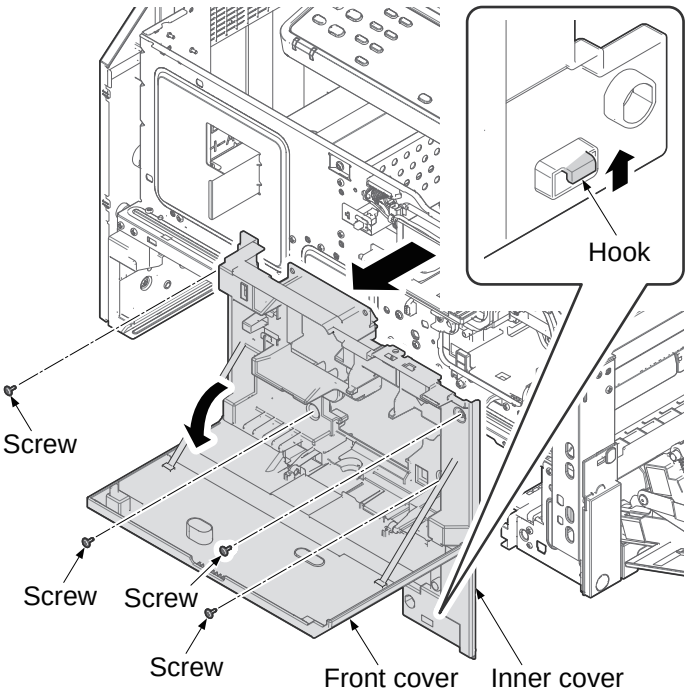

Figure 1-5-142

TONER
www.tonerplus.com.ua

(12)Detaching and refitting the language sheets

Procedure

1. Raise the operation panel cover using a flat screw driver and then remove it by sliding.

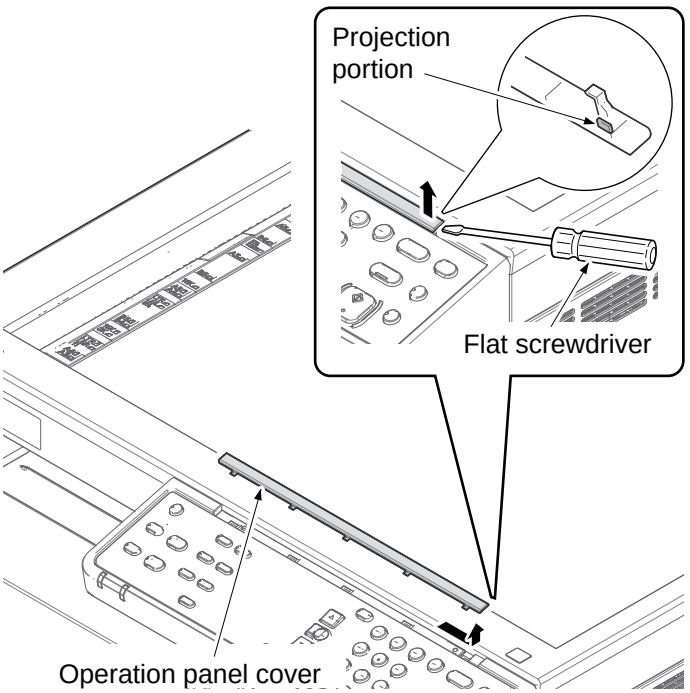

Figure 1-5-143

2. Remove the clear panel.
3. Remove the operation panel sheet.
4. Check or replace the operation panel sheet and refit all the removed parts.

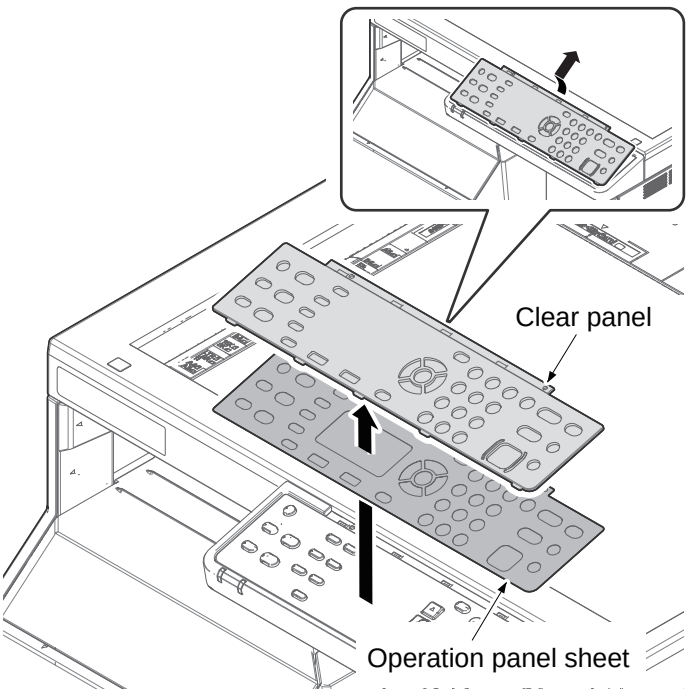

Figure 1-5-144

TONER
www.tonerplus.com.ua

(13)Detaching and refitting the operation panel assembly

Procedure

1. Remove two screws.
2. Release four hooks and then remove the connector from the operation panel PWB.
3. Remove the operation panel assembly upward.
4. Check or replace the operation panel assembly and refit all the removed parts.

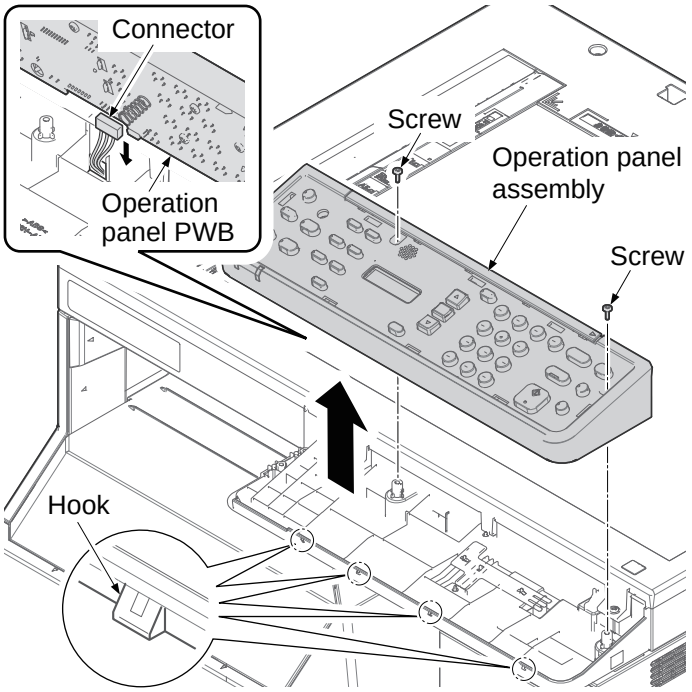

Figure 1-5-145

TONER
www.tonerplus.com.ua

(14)Detaching and refitting the cooling fan

Procedure

1. Remove the rear cover.
2. Remove the connector (YC-11) of the electric wires and then release the wire saddles.
3. Unhook two hooks and then remove the eject fan motor.
4. Check or replace the eject fan motor and refit all the removed parts.

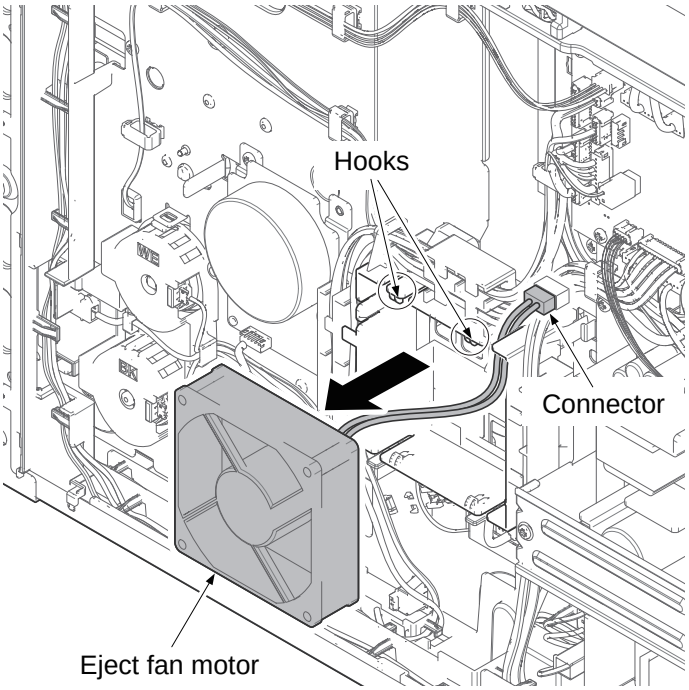

Figure 1-5-146

(15)Direction of installing the principal fan motors

When detaching or refitting the fan moter,be careful of the airflow direction (intake or exhaust).

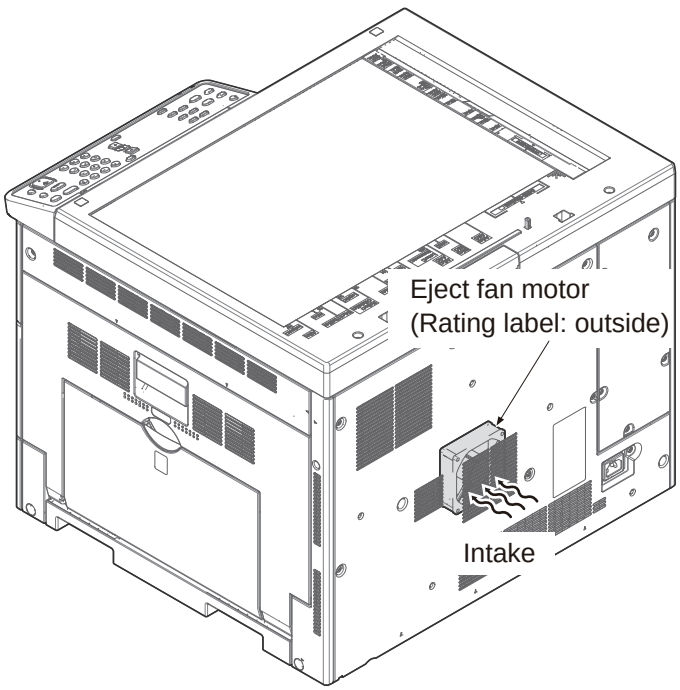

Figure 1-5-147

TONER
www.tonerplus.com.ua

1-5-11 Document processer (option)

(1) Original feed section

The original feed section consists of the parts shown in figure. An original placed on the original tray is conveyed to the original conveying section. Original is fed by the rotation of the DP forwarding pulley and DP paper feed roller.

[Component formation]

1. DP pickup pulley
2. DP paper feed roller
3. DP feed holder
4. DP separation pulley
5. Pre separation pad
6. Acutuator
   (DP original sensor)
7. PF stopper
8. Original tray
9. Acutuator
   (DP original feed sensor)
10. Acutuator
    (DP original length switch)

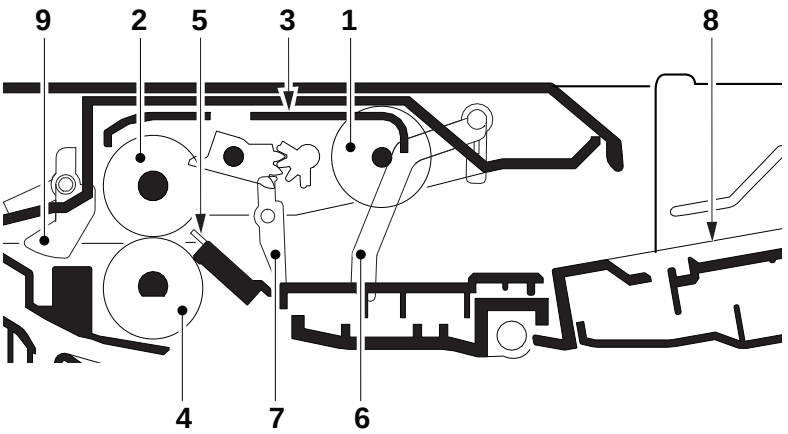

Figure 1-5-148

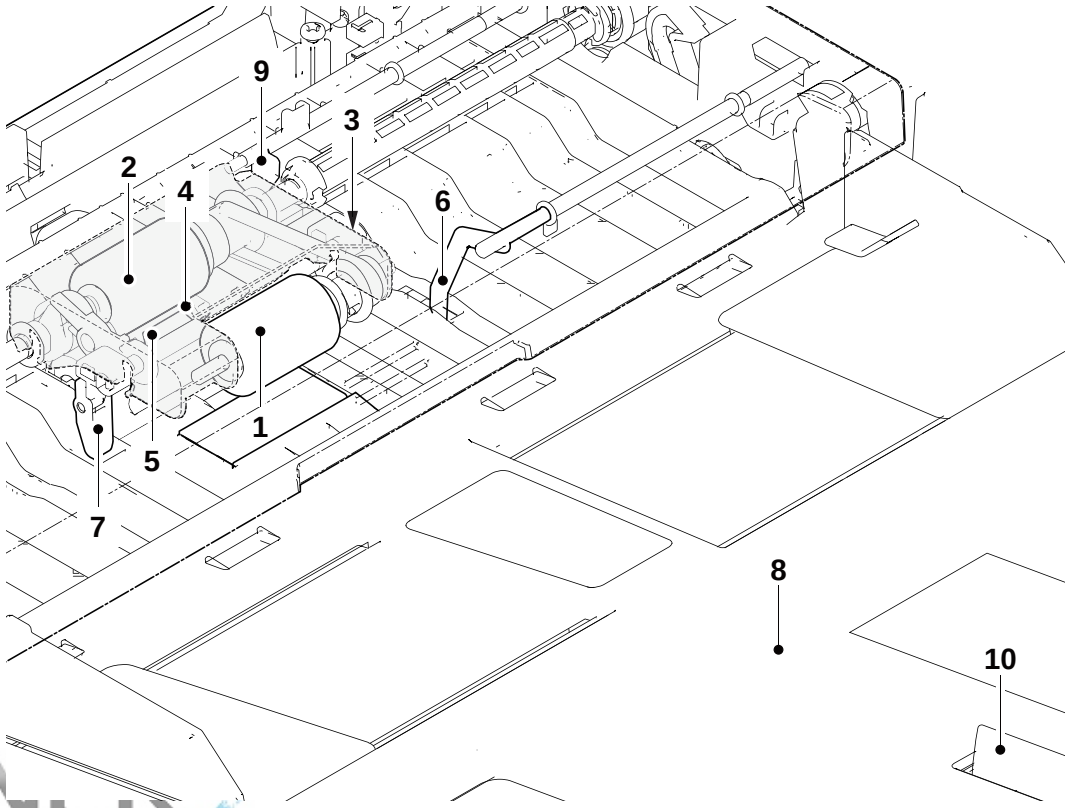

Figure 1-5-149

TONER
www.tonerplus.com.ua

[Control block diagram]

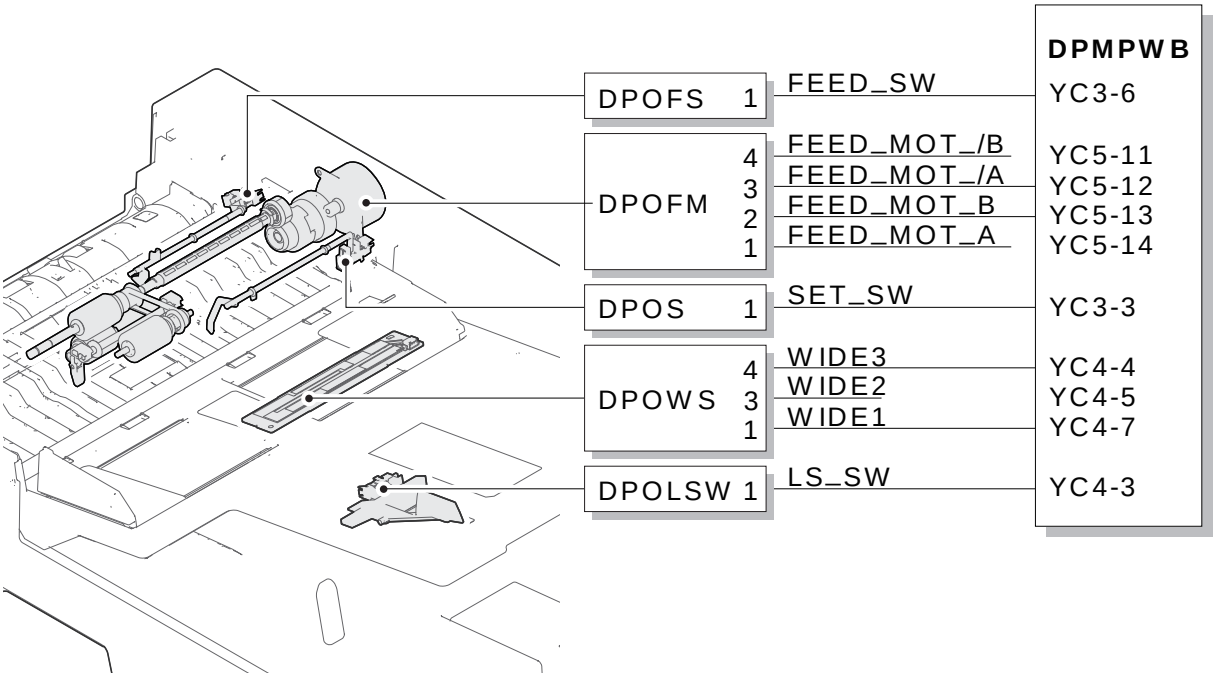

Figure 1-5-150

TONER
www.tonerplus.com.ua

(1-1) Detaching and refitting the document processer

Procedure

1. Remove the DP connector cover using flatscrew driver.
2. Remove the connector.
3. Remove the cable tie from the hole during pinching both-side of it.

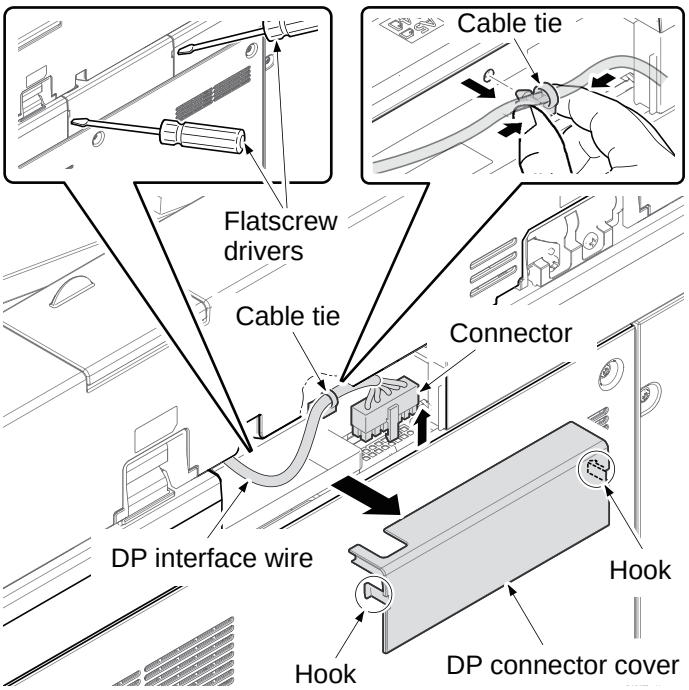

Figure 1-5-151

4. Remove the DP to upside from the main unit.
5. Check or replace the DP and refit all the removed parts.

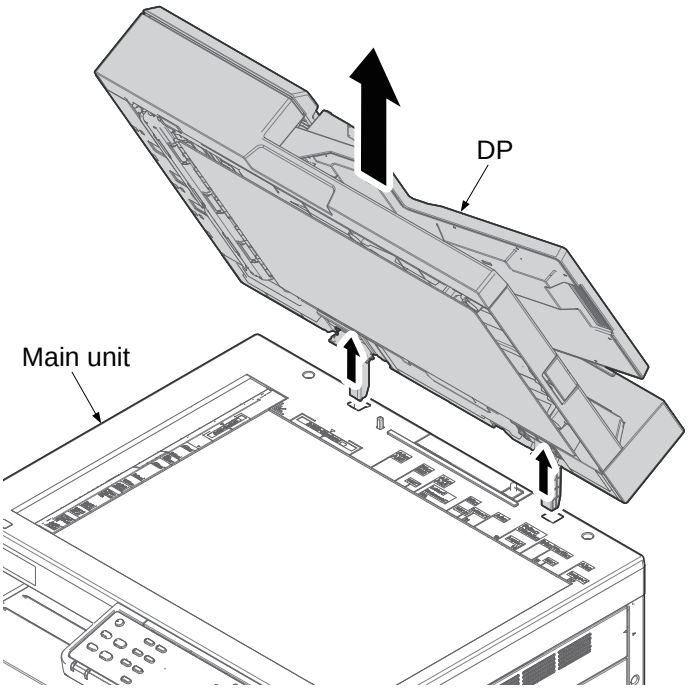

Figure 1-5-152

TONER
www.tonerplus.com.ua

(1-2) Detaching and refitting the DP paper feed roller and DP separation pulley

Procedure

1. Open the DP top cover.

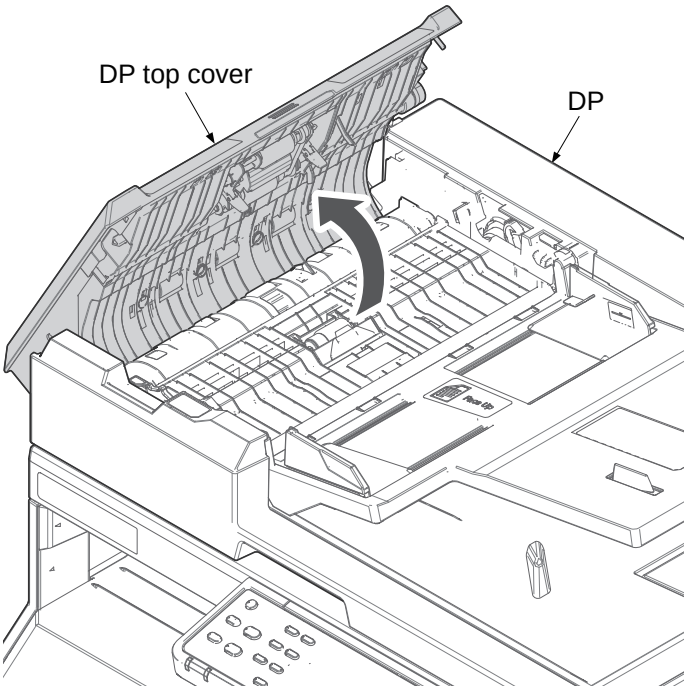

Figure 1-5-153

2. Remove the stop ring and then slide the bushing.
3. Remove the paper feed assembly by sliding it from the DP top cover.

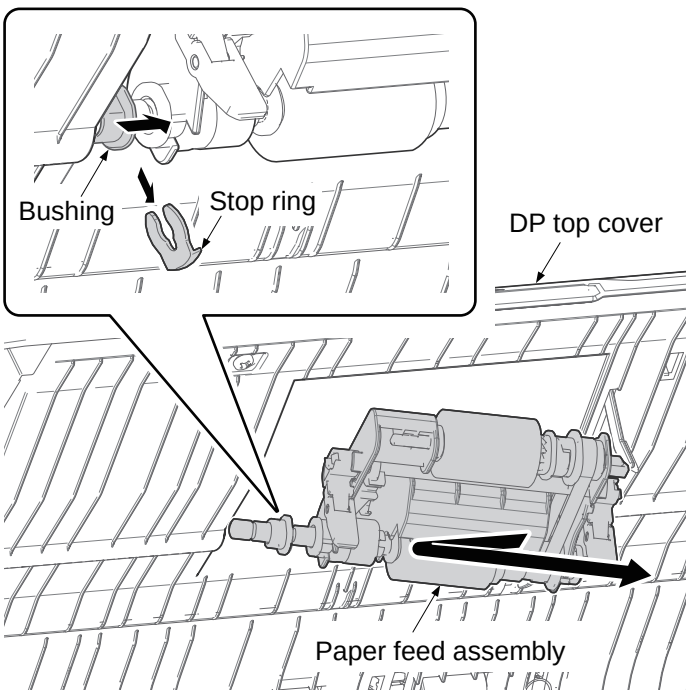

Figure 1-5-154

TONER
www.tonerplus.com.ua

4. Remove two stop rings and three bushings from the DP feed roller shaft.
5. Take up the DP feed roller from the paper feed assembly.

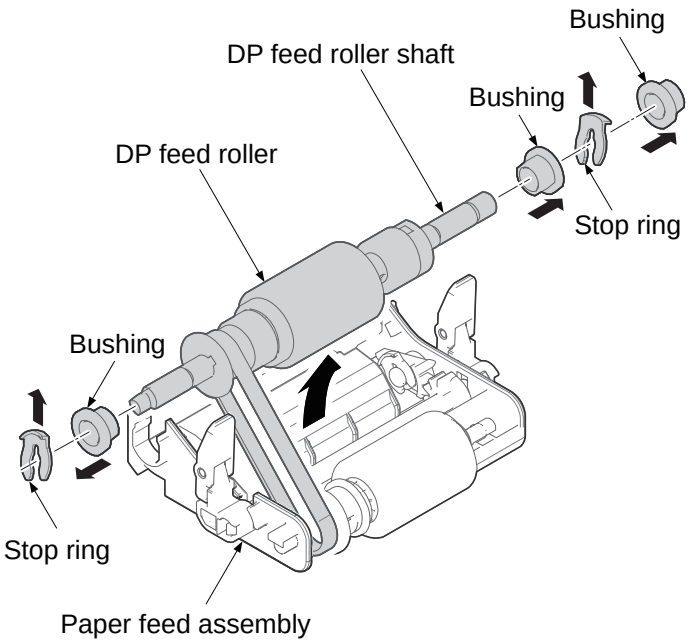

Figure 1-5-155

6. Lift the hook and pull out the pickup roller shaft.

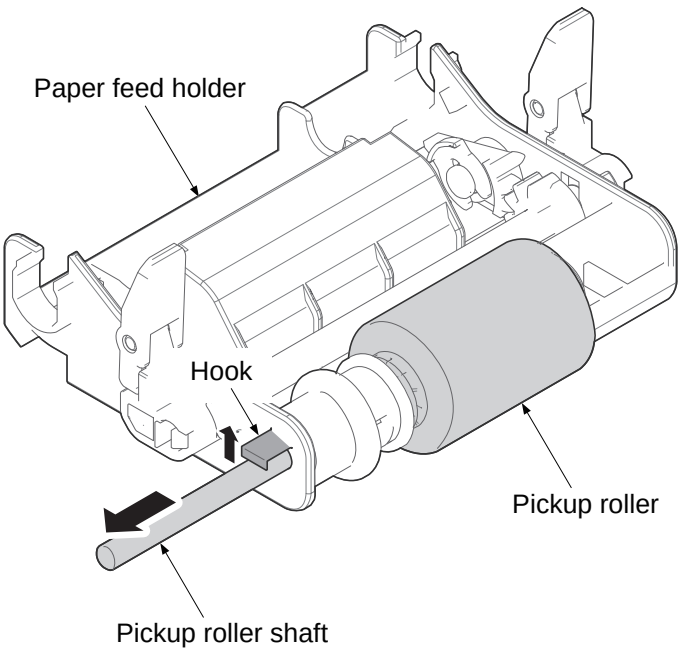

Figure 1-5-156

TONER
www.tonerplus.com.ua

7. Remove the retard guide.
8. Pull up the retard holder and remove it.
9. Check or replace the DP feedroller, the pickup roller and the retard roller and refit all the removed parts.

*: Check whether the pressure spring is contained in the projection.

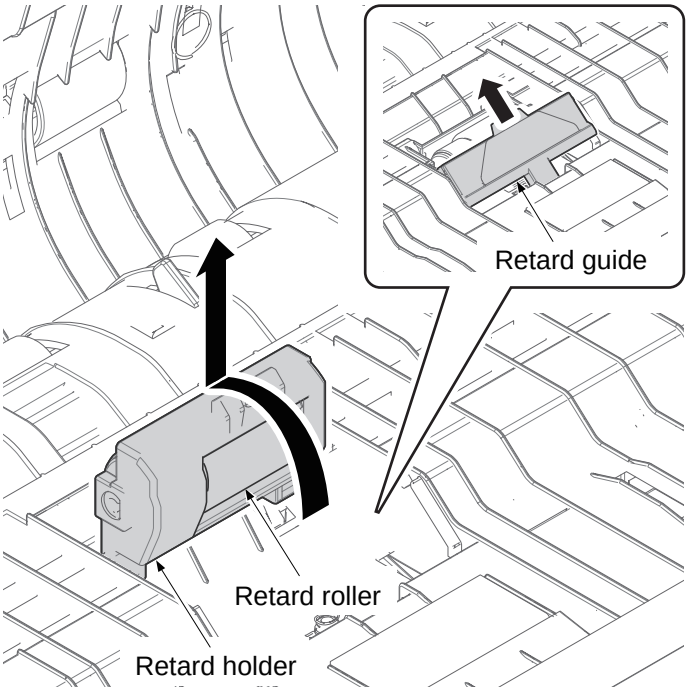

Figure 1-5-157

TONER
www.tonerplus.com.ua

(1-3) Detaching and refitting the DP ragistration clutch

Procedure

1. Release the wires from the wire guide.
2. Pull two projections of the wire guide forward.
3. Remove the wire guide by unhooking six hooks by sliding downward.

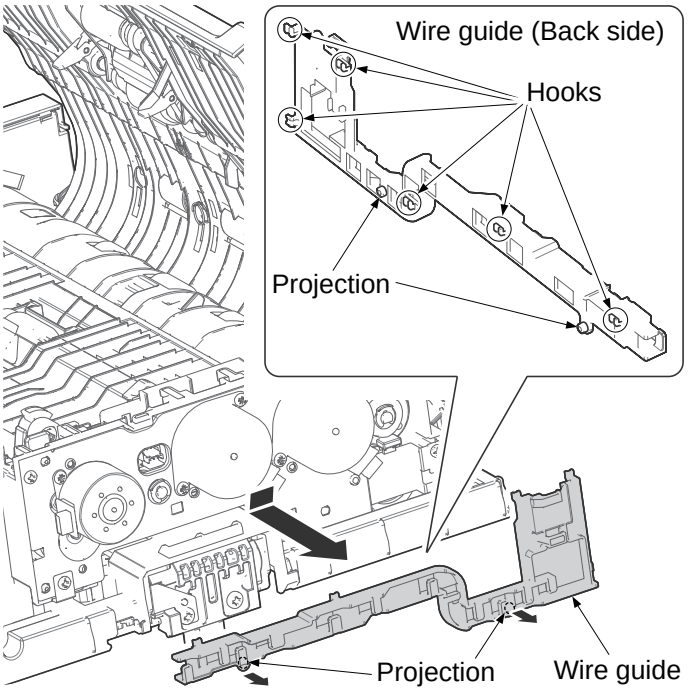

Figure 1-5-158

4. Remove the connector from the registration clutch.
5. Remove the stop ring.
6. Pull out the DP registration clutch forwards.
7. Check or replace the DP registration clutch and refit all the removed parts.

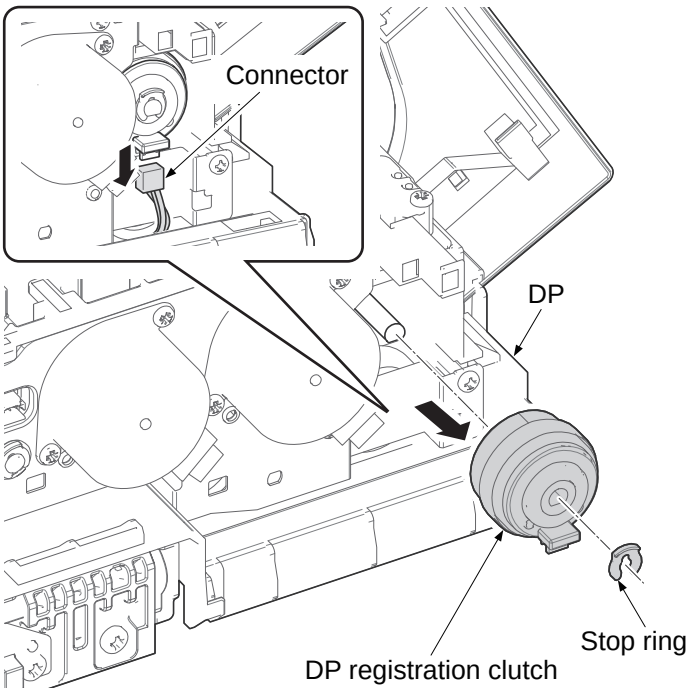

Figure 1-5-159

TONER
www.tonerplus.com.ua

(1-4) Detaching and refitting the drive motors

Procedure

1. Remove three connectors.
2. Remove two screws and remove the DP original conveying motor by pulling upward and then forward out.
3. Remove two screws and remove the DP original feed motor by pulling diagonal leftward and then forward out.
4. Remove two screws and remove the DP switchback motor by pulling out forward.
5. Check or replace the DP original conveying motor, the DP original feed motor and the DP switchback motor and refit all the removed parts.

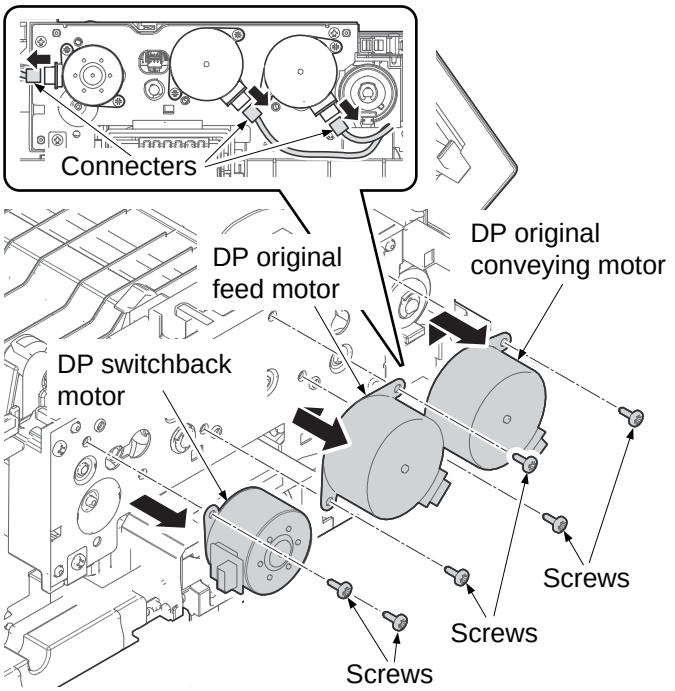

Figure 1-5-160

TONER
www.tonerplus.com.ua

(2) Original conveying section

The original conveying section consists of the parts shown in figure. A conveyed original is scanned by the optical section (CIS) of main machine when it passes through the slit glass of main machine.

[Component formation]

1. DP registration roller
2. DP regisutration pulley
3. Actuator
   (DP registration sensor)
4. DP conveying roller
5. DP conveying pulley
6. Acutuator
   (DP timing sensor)
7. Reading guide
8. Slit glass
9. DP eject roller
10. DP eject pulley
11. Switchback guide

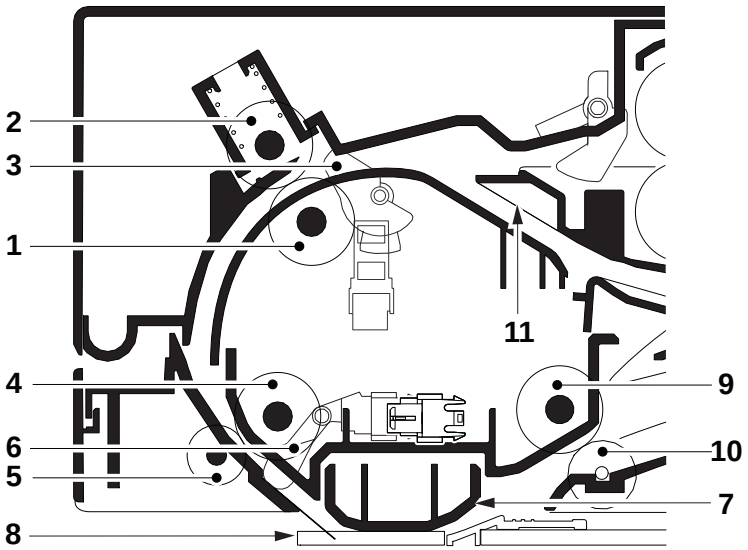

Figure 1-5-161

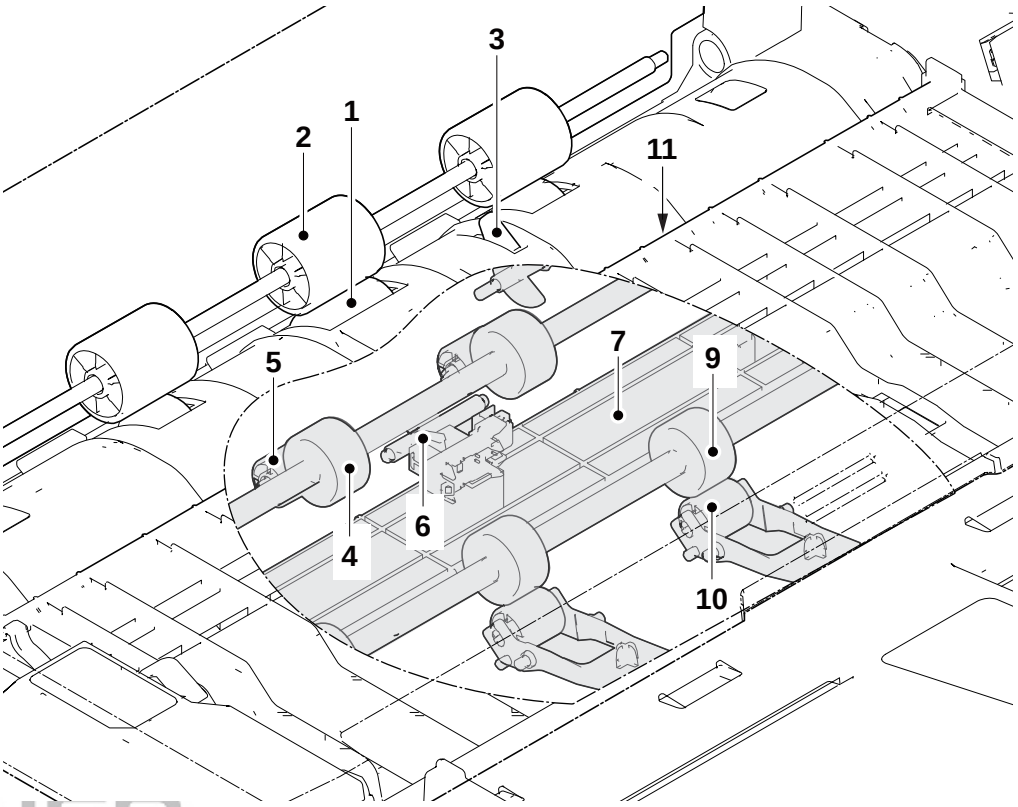

Figure 1-5-162

TONER
www.tonerplus.com.ua

[Control block diagram]

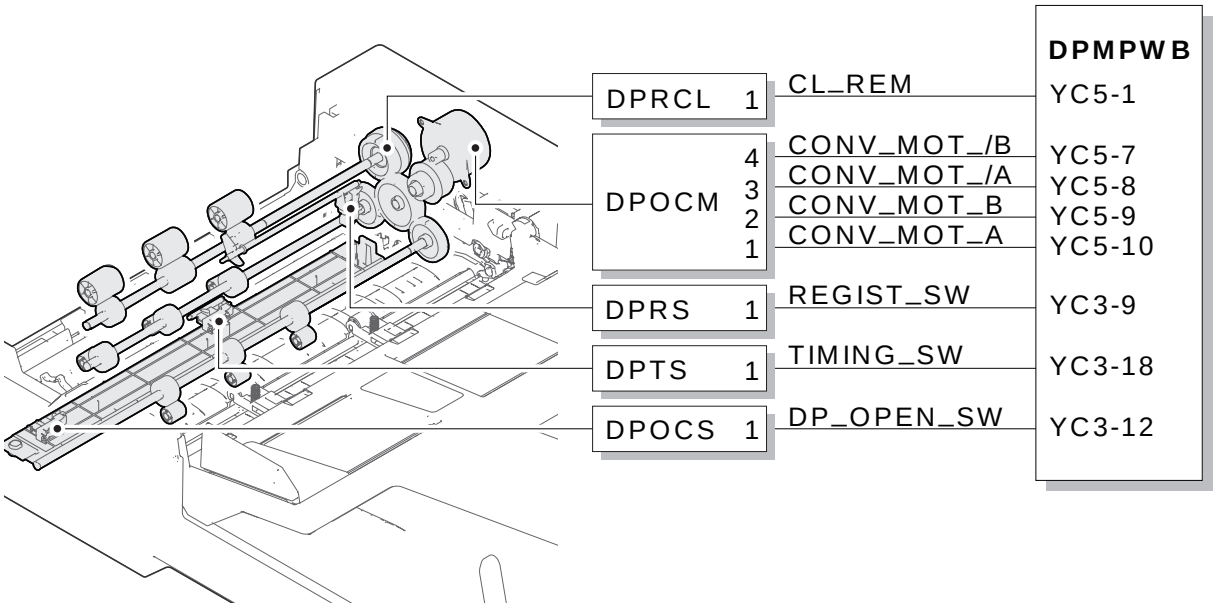

Figure 1-5-163

TONER
www.tonerplus.com.ua

(3) Original switchback/eject sections

The original switchback/eject sections consists of the parts shown in figure. An original of which scanning is complete is ejected to the original eject table by the eject roller.
An original is conveyed temporarily to the original eject table and conveyed again to the original conveying section by the switchback roller.

[Component formation]

1. Shift guide
2. Eject roller
3. Eject pulley
4. Switchback roller
5. Switchback pulley
6. Original eject table
7. Du guide wire

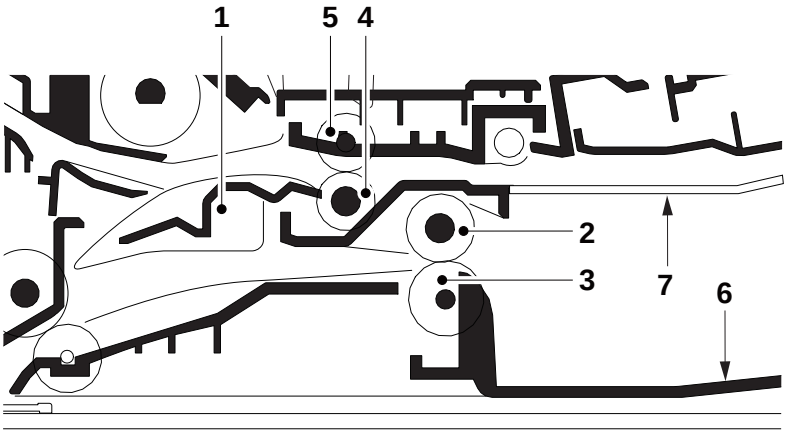

Figure 1-5-164

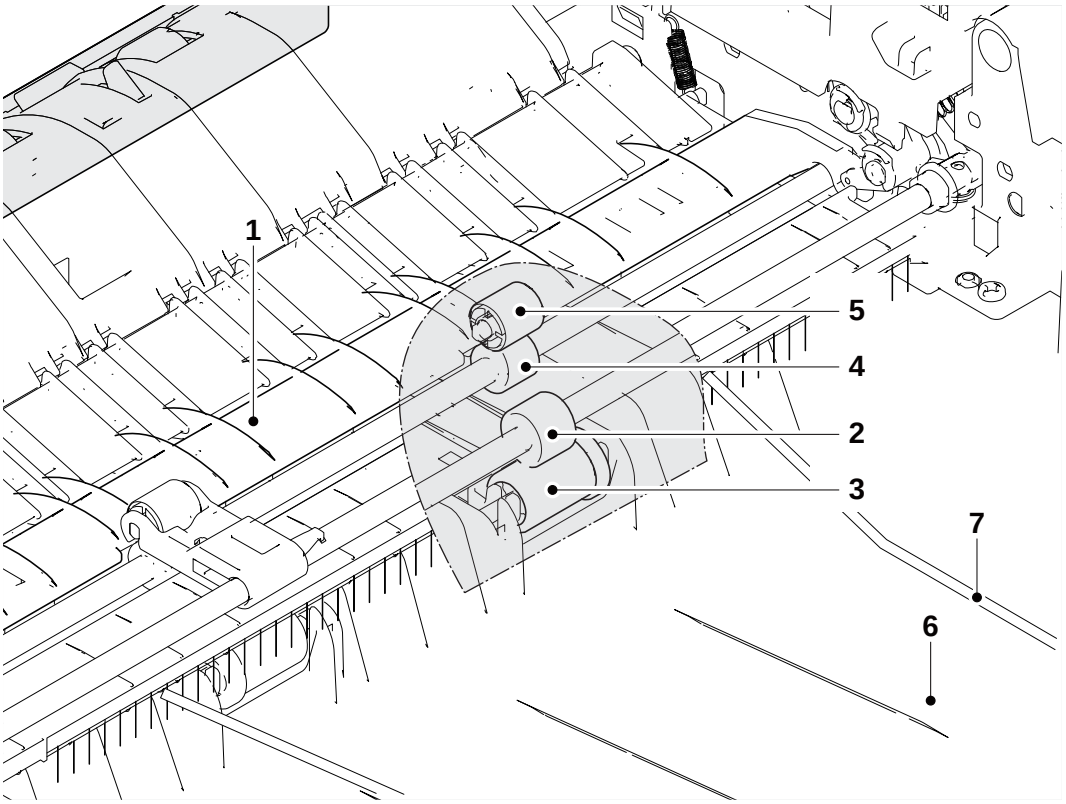

Figure 1-5-165

TONER
www.tonerplus.com.ua

[Control block diagram]

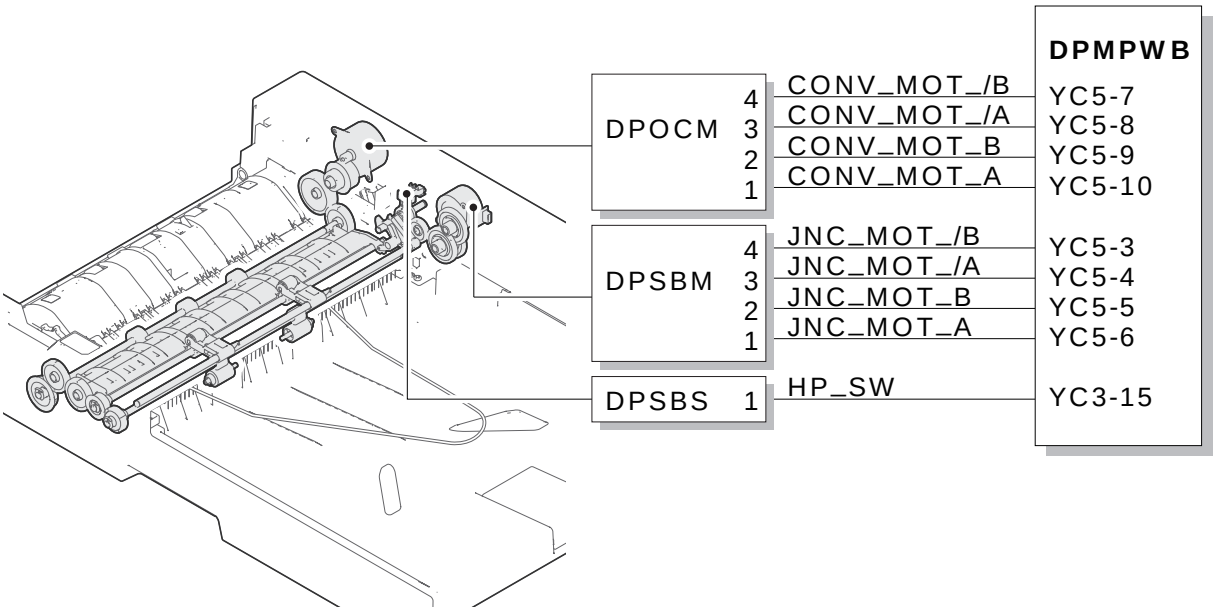

Figure 1-5-166

TONER
www.tonerplus.com.ua

1-5-12 Paper feeder (option)

The paper feeder feeds paper from optional cassettes to the machine.The cassette can contain 500 sheets (80 g/m2). The sheet from the cassette is pulled out by rotation of the pickup roller and sent to the paper conveying section by rotation of the paper feed roller. Also the retard roller prevents multiple feeding of **paper.**

[Component formation]

1. PF paper feed roller
2. PF pickup roller
3. PF feed holder
4. PF retard roller
5. PF retard holder
6. PF friction pad
7. PF bottom plate
8. PF paper width guide
9. PF paper length guide
10. PF cassette base
11. PF conveying roller
12. PF conveying pulley
13. Acutuator
    (PF conveying sebsor)
14. Acutuator
    (PF paper sensor)

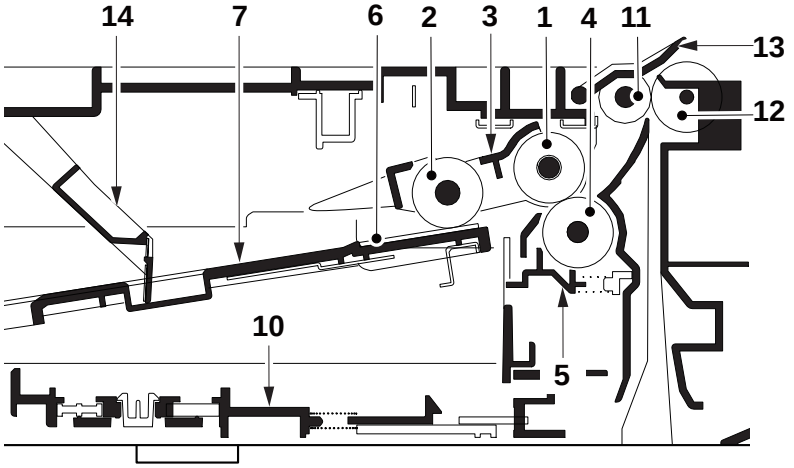

Figure 1-5-167

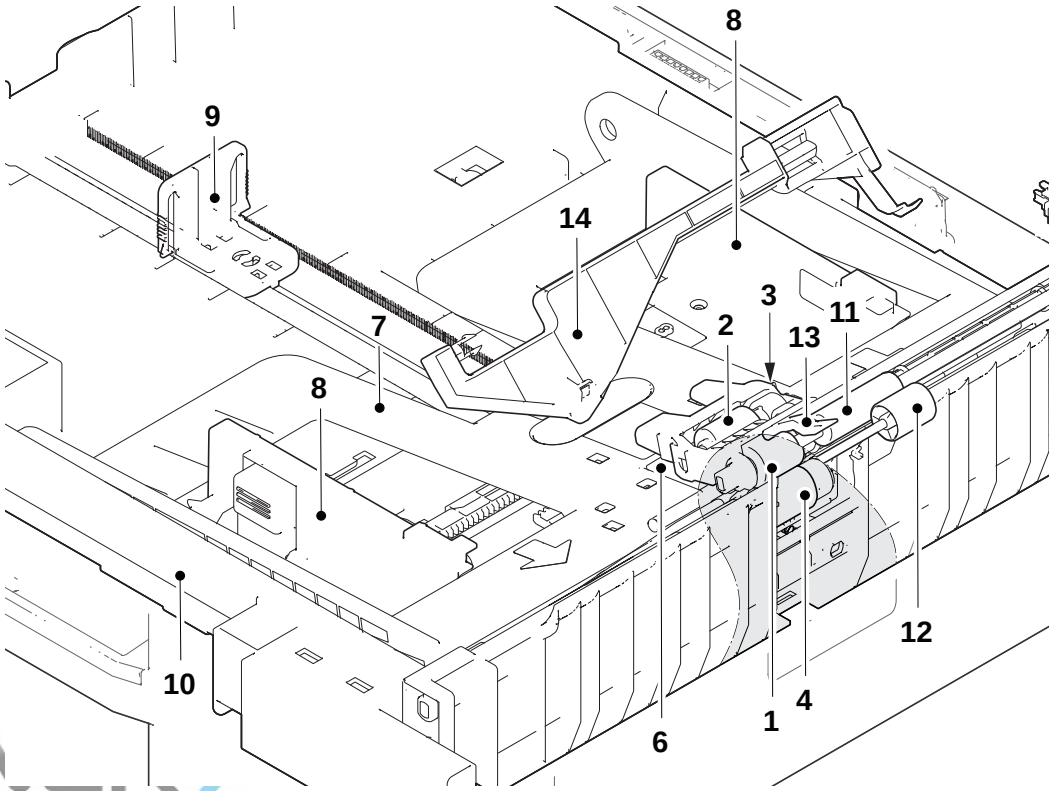

Figure 1-5-168

www.tonerplus.com.ua

[Control block diagram]

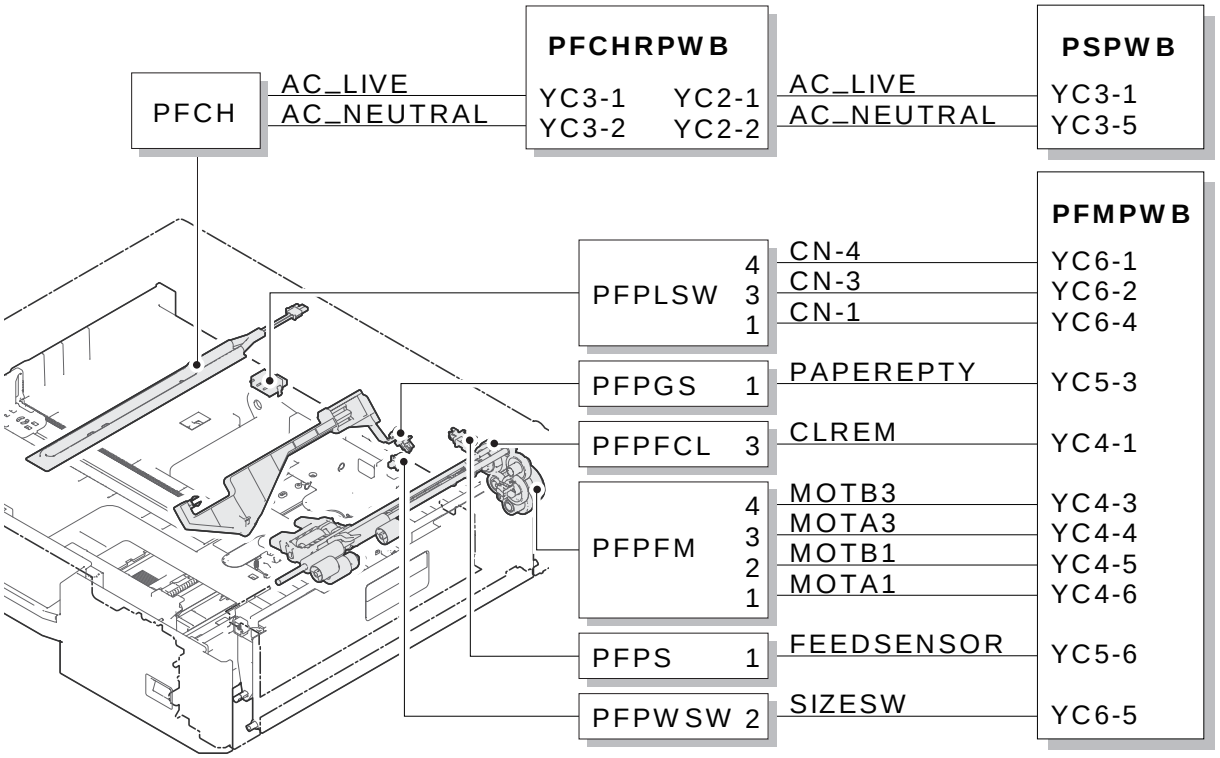

Figure 1-5-169

TONER
www.tonerplus.com.ua

(1) Detaching and refitting the PF feed motor

Procedure

1. Remove two screws.
2. Remove the PF rear cover by leaning forward and taking upward.

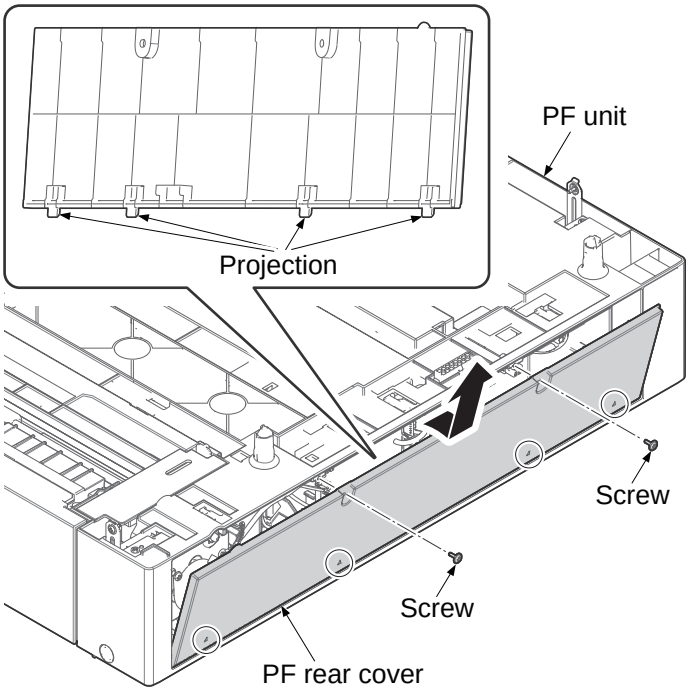

Figure 1-5-170

3. Remove the connectors from PF main PWB.

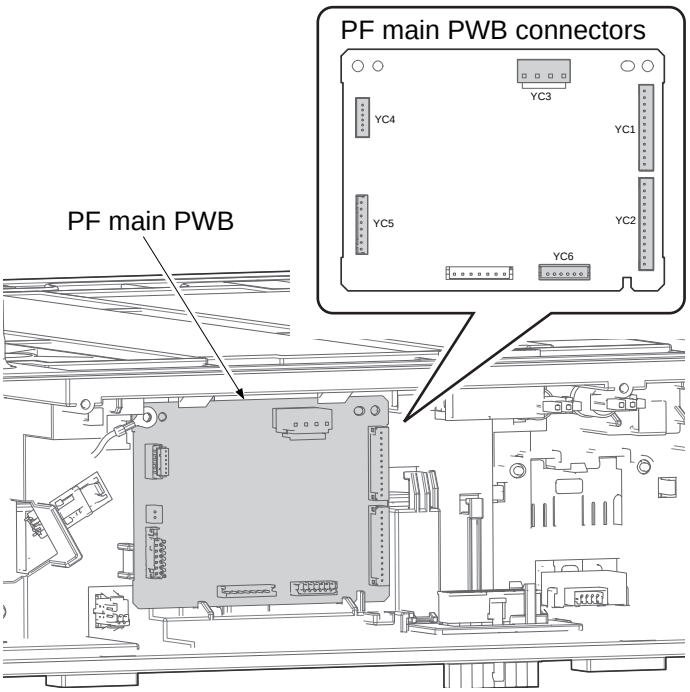

Figure 1-5-171

TONER
www.tonerplus.com.ua

4. Remove the screw and the ground terminal.
5. Release two hooks B by pushing two hooks A to upside and remove the PF main PWB.

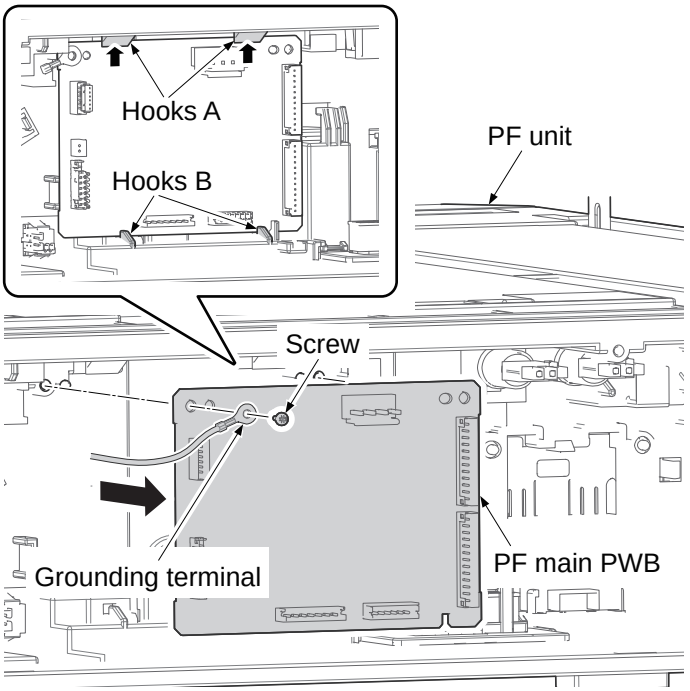

Figure 1-5-172

6. Remove the connector.
7. Remove two screws and remove the PF paper feed motor.
8. Check or replace the PF feed motor and refit all the removed parts.

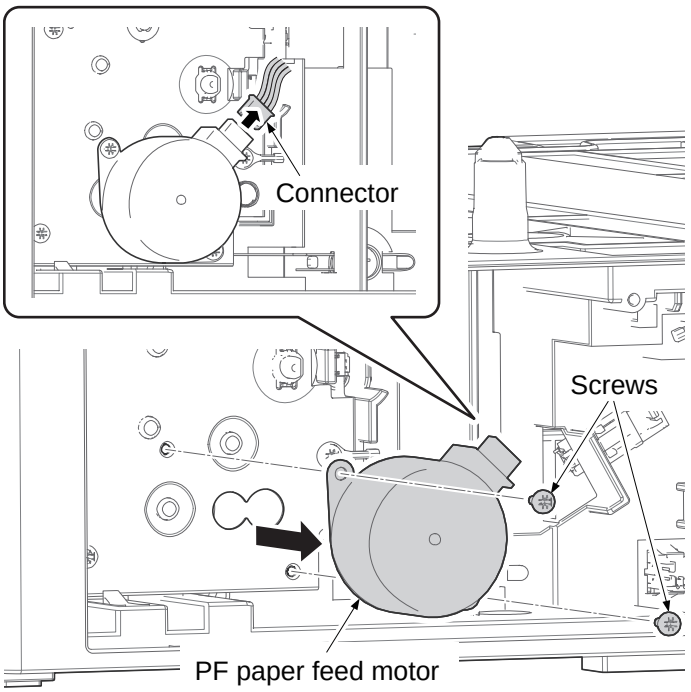

Figure 1-5-173

TONER
www.tonerplus.com.ua

(2) Detaching and refitting the PF feed clutch

Procedure

1. Remove the stop ring and the bushing.
2. Remove three screws and grounding terminal.
3. Remove the motor mount frame.

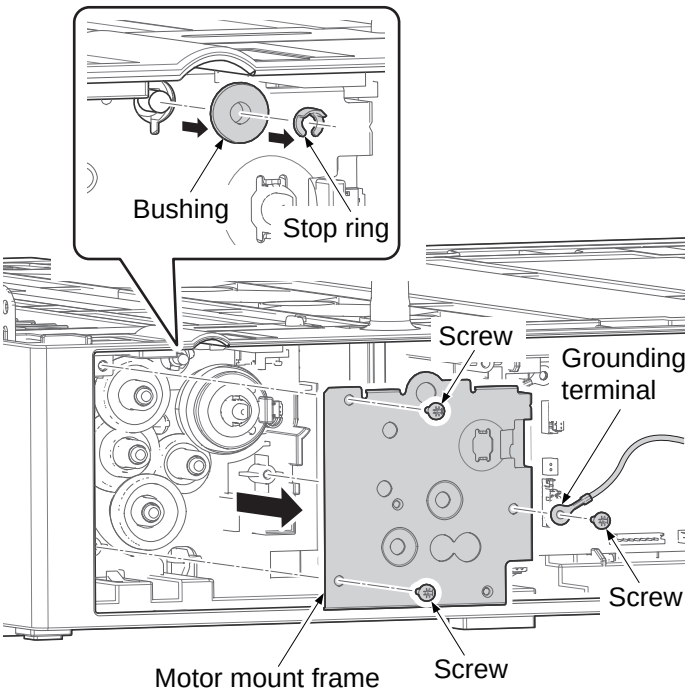

Figure 1-5-174

4. Remove the connector from the PF paper feed clutch.
5. Pull out the PF paper feed clutch.
6. Check or replace the PF feed clutch and refit all the removed parts.

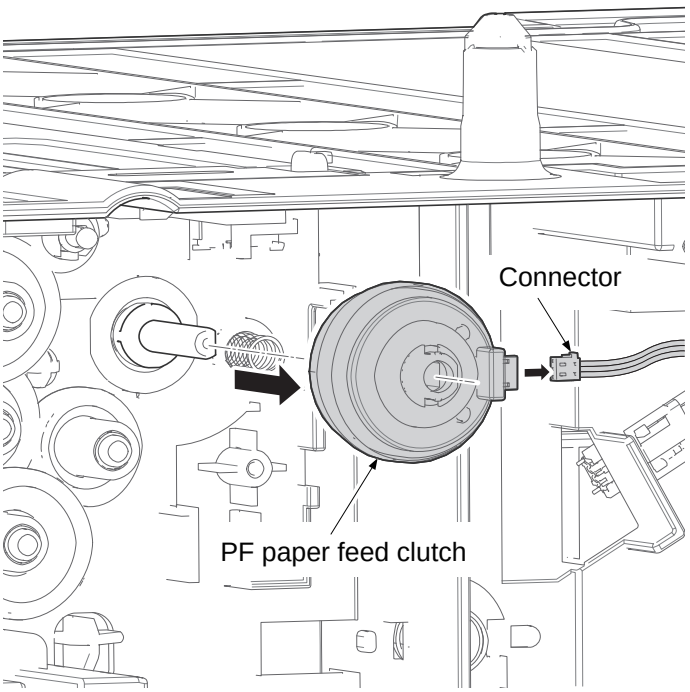

Figure 1-5-175

TONER
www.tonerplus.com.ua

(3) Detaching and refitting the paper feed holder

Procedure

1. Pull out the cassette forward.

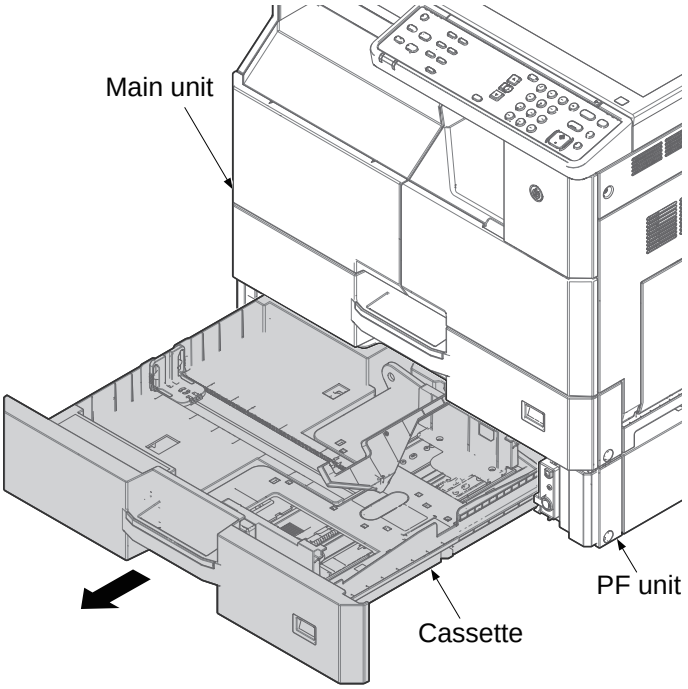

Figure 1-5-176

2. Remove the screw of fixing the top PF paper feed assembly.
3. Pull out the top PF paper feed assembly forward from the main unit.

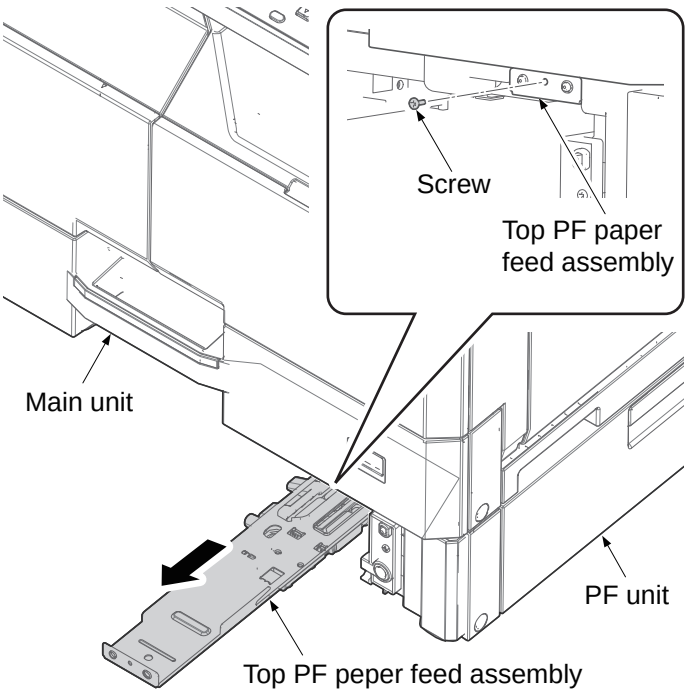

Figure 1-5-177

TONER
www.tonerplus.com.ua

4. Remove the spring using the longnose pliers from the attachment hole in PF paper feed holder and the top PF paper feed assembly.

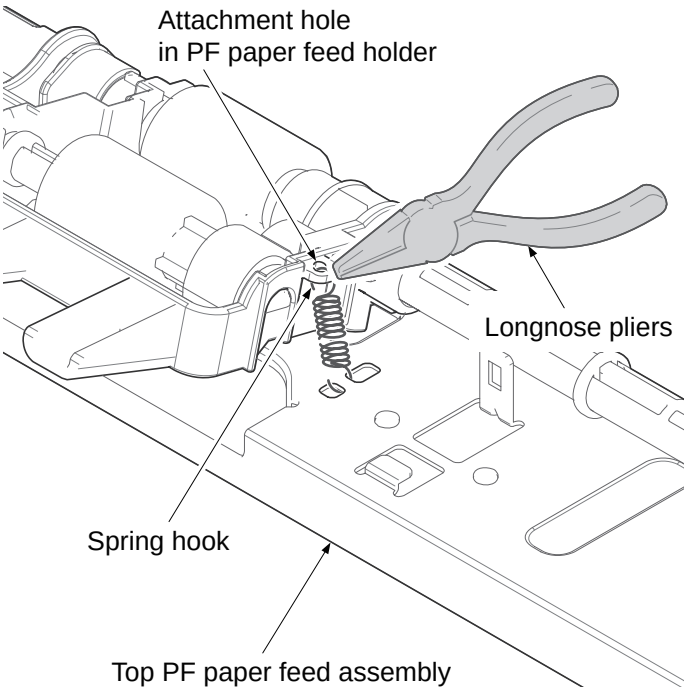

Figure 1-5-178

5. Lift the paper feed holder and then rotate it.
6. Remove the paper feed holder by pulling out from the paper feed roller shaft.
7. Check or replace the paper feed holder and refit all the removed parts.

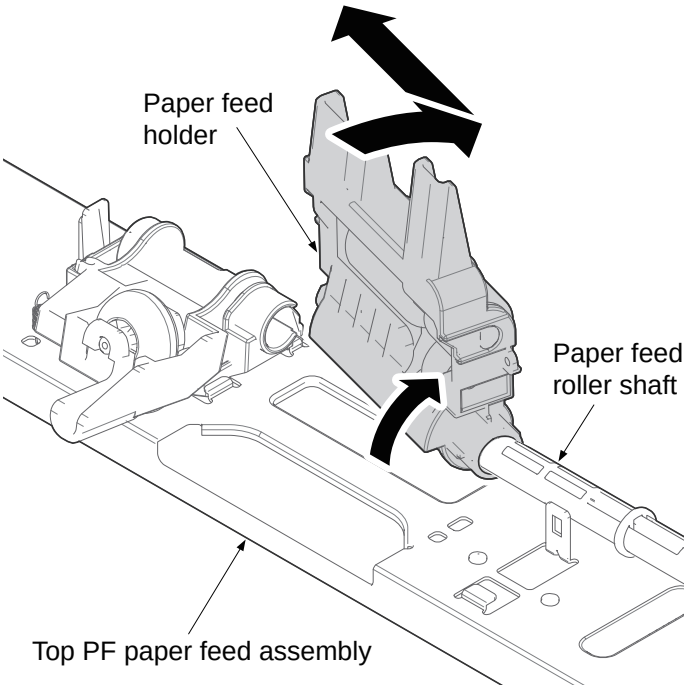

Figure 1-5-179

TONER
www.tonerplus.com.ua

(4) Detaching and refitting the retard roller holder

Procedure

1. Remove the screw of fixing the lower PF paper feed assembly.
2. Pull out the lower PF paper feed assembly forward from the main unit.

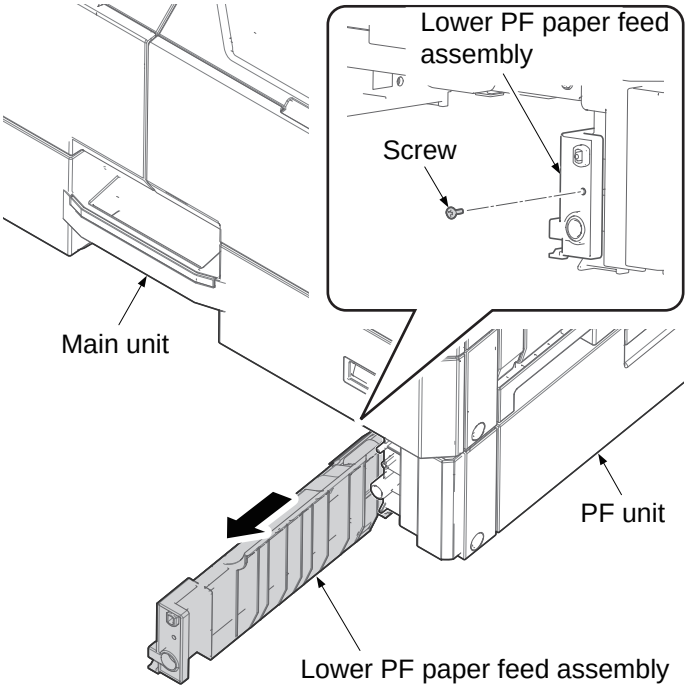

Figure 1-5-180

3. Remove the retard roller cover by unhooking the hook from the lower PF feed assembly.

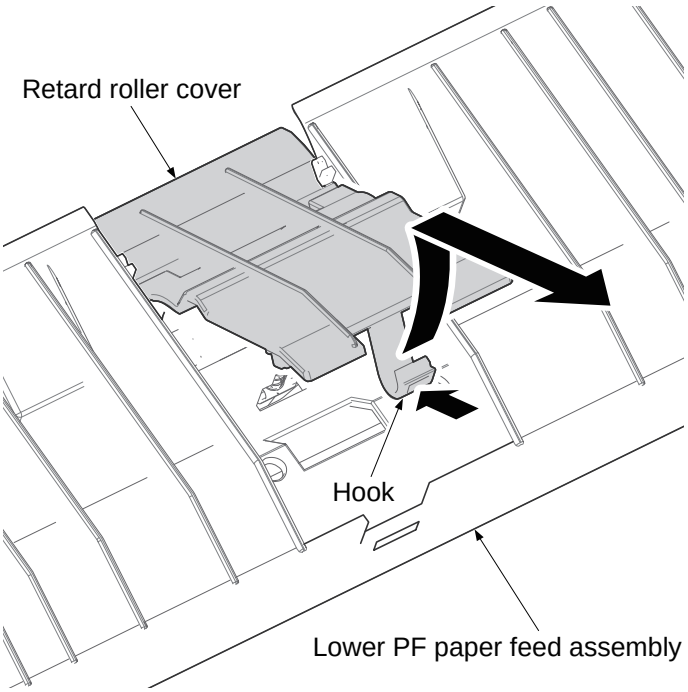

Figure 1-5-181

TONER
www.tonerplus.com.ua

4. Remove the retard roller holder by bending two fulcrums to inner side.
5. Check or replace the retard roller holder and refit all the removed parts.

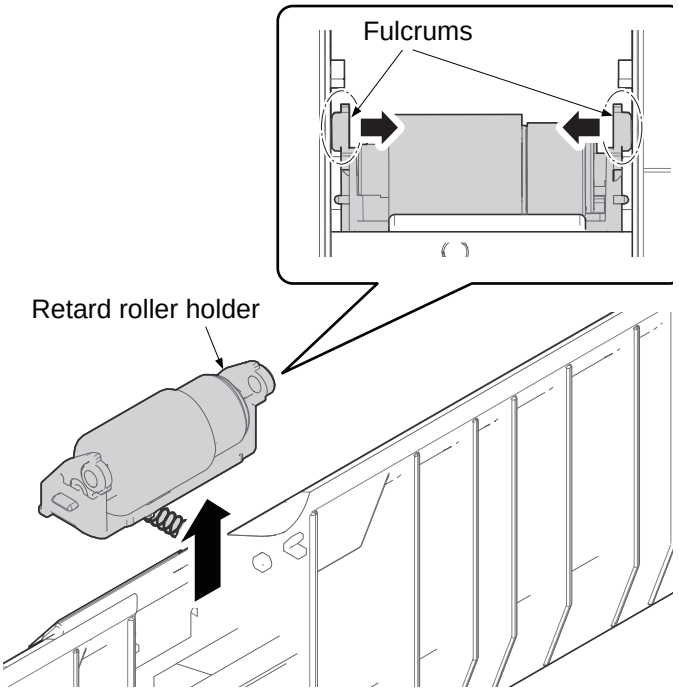

Figure 1-5-182

TONER
www.tonerplus.com.ua

2-1-1 PWBs

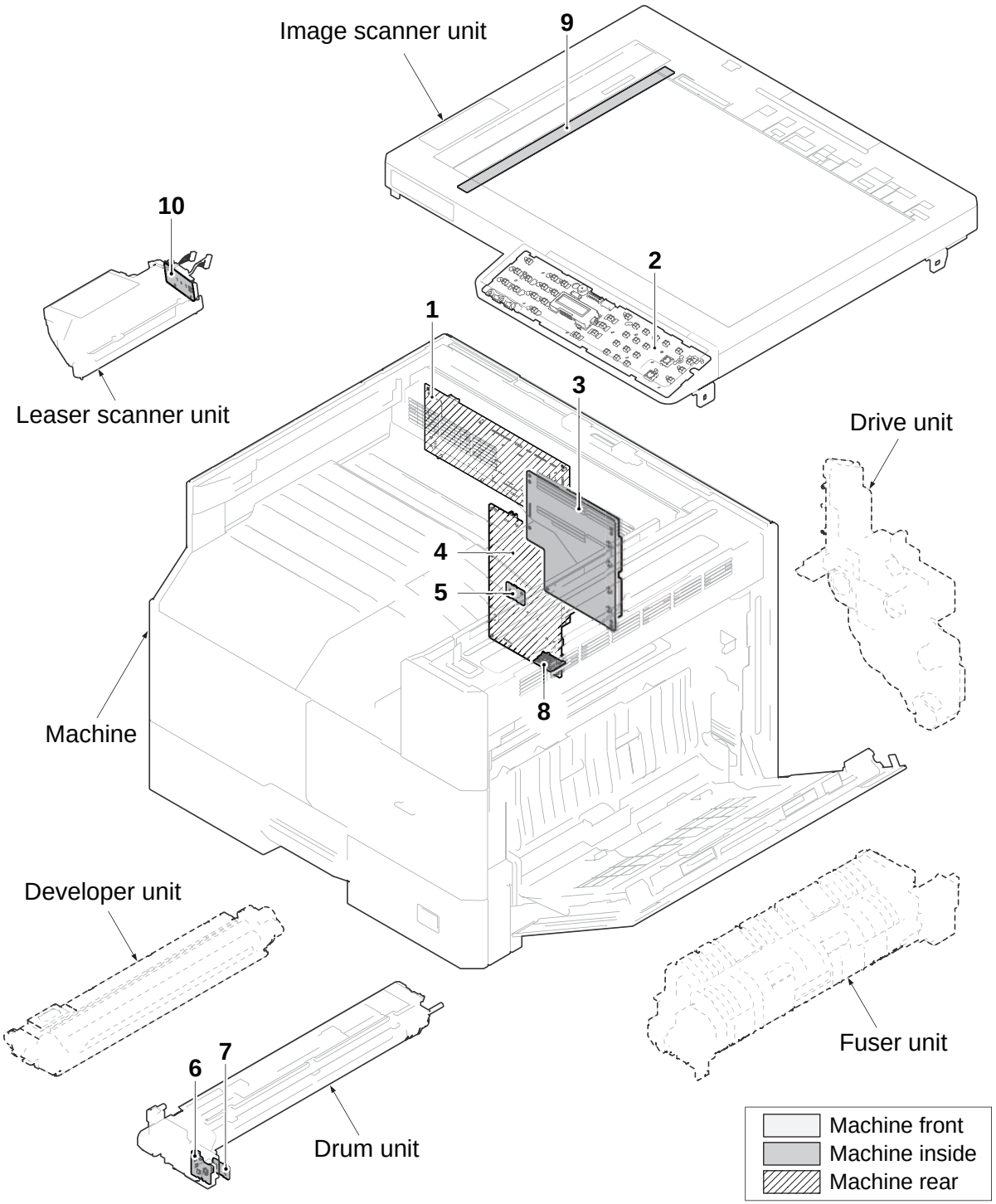

Figure 2-1-1

TONER
www.tonerplus.com.ua

1. Main/Engine PWB (MEPWB)..... Controls the software such as the print data processing and provides the interface with computers.
   Controls printer hardware such as high voltage/bias output control, paper conveying system control, and fuser temperature control, etc.
2. Operation panel PWB (OPPWB) ..... Consists the LCD, LED indicators and key switches.
3. High voltage PWB (HVPWB) ..... Generates main charging, developing bias, transfer bias and separation bias.
4. Power source PWB (PSPWB) ..... After full-wave rectification of AC power source input, switching for converting to 24 V DC for output. Controls the fuser heater.
5. Sub PWB (SPWB) ..... 3.3V output control when standing by.
6. Drum PWB (DRPWB) ..... Relays wirings from electrical components on the drum unit.
7. Drum relay PWB (DRRPWB)..... Consists of wiring relay circuit between engine PWB and the drum unit.
8. Container relay PWB (CONTRPWB) .... Consists of wiring relay circuit between engine PWB and the toner container.
9. CIS (CIS)..... Reads the image of originals.
10. APC PWB (APCPWB) ..... Generates and controls the laser beam.

List of correspondences of PWB names

No.	Name used in service manual	Name used in parts list	Part.No.
1	Main/engine PWB (MEPWB)	PARTS PWB MAIN ENGINE ASSY SP	302NN94040
2	Operation panel PWB (OPPWB)	PARTS PWB PANEL MAIN ASSY SP	302NN94030
3	High voltage PWB (HVPWB)	PARTS HIGH VOLTAGE UNIT SP	302NG94250
4	Power source PWB (PSPWB)	PARTS UNIT POWER SOURCE 230 SP PARTS UNIT POWER SOURCE 120 SP	302NG94240 302NG94230
5	Sub PWB (SPWB)	PWB SUB ASSY	302H701280
6	Drum PWB (DRPWB)	-	-
7	Drum relay PWB (DRRPWB)	PARTS PWB DRUM CONNECT ASSY SP	2NG94290
8	Container relay PWB (CONTRPWB)	P.W.BOARD ASSY CONTAINER CONN	302LV01130
9	CIS (CIS)	PARTS CIS ASSY SP	302NG93070
10	APC PWB (APCPWB)	-	-

TONER
www.tonerplus.com.ua

2-1-2 Switches and sensors

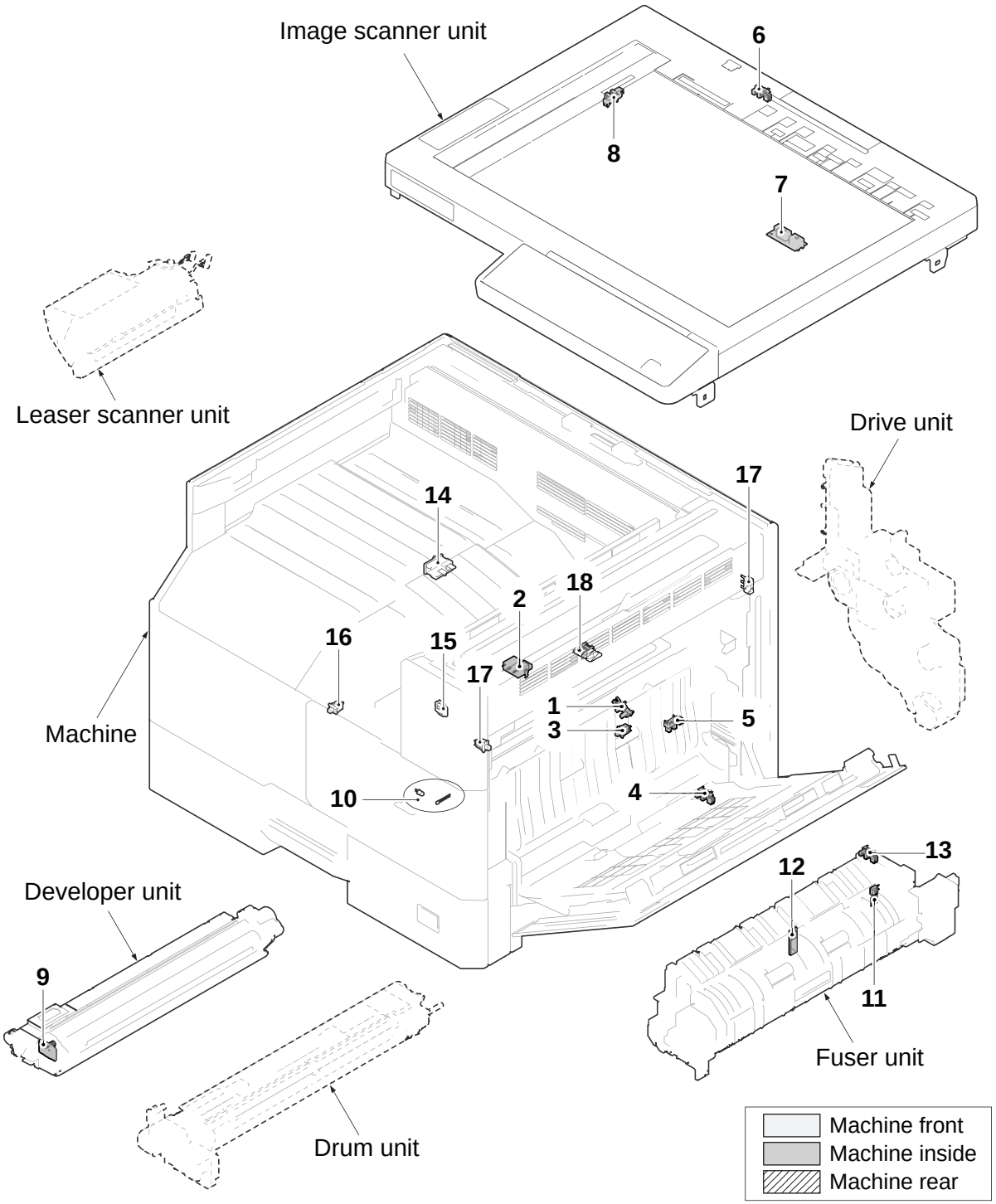

Figure 2-1-2

TONER
www.tonerplus.com.ua

1. Paper sensor (PS) ..... Detects the presence of paper in the cassette.
2. Paper size length switch (PLSW)..... Detects the length of paper in the cassette.
3. Paper size width switch (PWSW)..... Detects the width of paper in the cassette.
4. MP paper sensor (MPPS) ..... Detects the presence of paper on the MP tray.
5. Registration sensor (RS)..... Controls the secondary paper feed start timing.
6. Original detection switch (ODSW) ..... Detects the opening/closing of the document processor.
7. Original size sensor (OSS) ..... Detects the size of the original.
8. Home position sensor (HPS) ..... Detects the ISU in the home position.
9. Toner sensor (TS) ..... Detects the amount of toner remaining in the toner container.
10. Waste toner sensor (WTS)..... Detects when the waste toner box is full.
11. Fuser thermistor1 (FTH1) ..... Detects the heat roller temperature (Edge).
12. Fuser thermistor2 (FTH2) ..... Detects the heat roller temperature (Center).
13. Eject sensor (FUES) ..... Detects a paper misfeed in the fuser or eject section.
14. Main power switch (MSW) ..... Turns ON/OFF the AC power source.
15. Power source switch (PSSW) ..... Change ON/OFF the power supply of a main PWB, an operation PWB, etc.
16. Front cover switch (FRCSW) ..... Detects the opening and closing of the front cover.
17. Right cover switch (RCSW) ..... Detects the opening and closing of the right cover. Shuts off 24 V DC power line when the right cover is opened.
18. Temperature sensor (TEMS)..... Detects the temperature and absolute humidity in the machine.

List of correspondences of switch and sensor names

No.	Name used in service manual	Name used in parts list	Part.No.
1	Paper sensor (PS)	PARTS SENSOR OPT SP	303M894260
2	Paper size length switch (PLSW)	PUSH SWITCH 03SN /SW-192N	5ESP03090001+01
3	Paper size width switch (PWSW)	SW.PUSH	7SP01000004+H01
4	MP paper sensor (MPPS)	PARTS SENSOR OPT SP	303M894260
5	Registration sensor (RS)	PARTS SENSOR OPT SP	303M894260
6	Original detection switch (ODSW)	PARTS SENSOR OPT SP	303M894260
7	Original size sensor (OSS)	SENSOR ORIGINAL	302NG44040
8	Home position sensor (HPS)	PARTS SENSOR OPT SP	303M894260
9	Toner sensor (TS)	-	-
10	Waste toner sensor (WTS)	-	-
11	Fuser thermistor1 (FTH1)	-	-
12	Fuser thermistor2 (FTH2)	-	-
13	Eject sensor (FUES)	-	-
14	Main power switch (MSW)	-	-
15	Power source switch (PSSW)	PARTS PWB SWITCH ASSY SP	302NG94300
16	Front cover switch (FRCSW)	SW.PUSH	7SP01000004+01
17	Right cover switch (RCSW)	SW.MICRO	7SM010202+++H01
18	Temperature sensor (TEMS)	-	-

TONER
www.tonerplus.com.ua

2-1-3 Motors

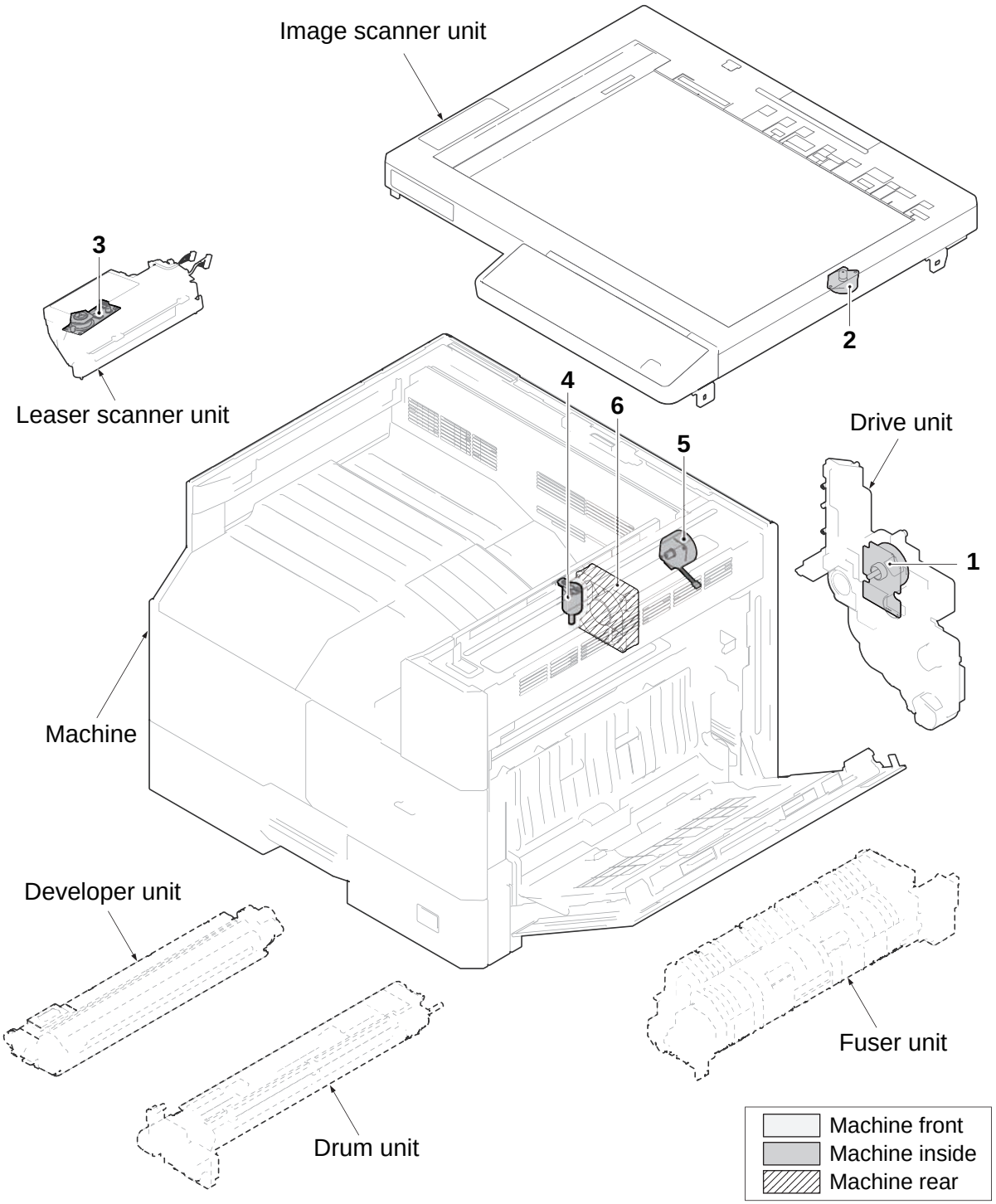

Figure 2-1-3

TONER
www.tonerplus.com.ua

1. Main motor (MM)..... Drives the paper feed section and conveying section.
2. Scanner motor (ISUM)..... Drives the ISU.
3. Polygon motor (PM)..... Drives the polygon mirror.
4. Toner motor (TM) ..... Replenishes toner to the developing unit.
5. Duplex motor (DUM)..... Drives the duplex section.
6. Eject fan motor (EFM)..... Cools the eject section.

List of correspondences of motor names

No.	Name used in service manual	Name used in parts list	Part.No.
1	Main motor (MM)	PARTS MOTOR-BL W20 SP	302NG94190
2	Scanner motor (SM)	PARTS MOTOR ISU SP	302NG94210
3	Polygon motor (PM)	-	-
4	Toner motor (TM)	PARTS DC MOTOR ASSY SP	302NG94050
5	Duplex motor (DUM)	MOTOR EJECT	302F944131
6	Eject fan motor (EFM)	PARTS FAN MOTOR SP	302NG94220

TONER
www.tonerplus.com.ua

2-1-4 Others

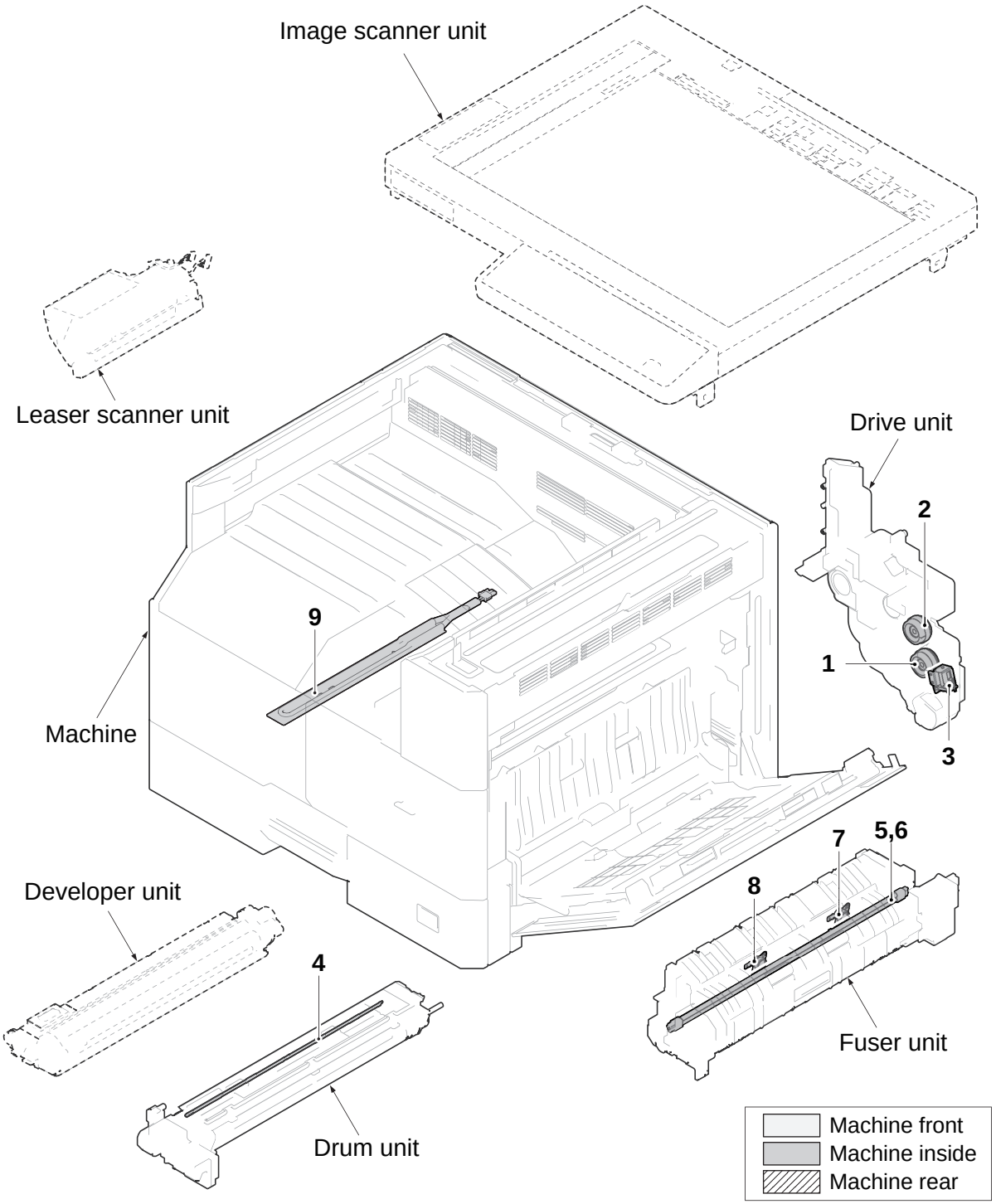

Figure 2-1-4

TONER
www.tonerplus.com.ua

1. Paper feed clutch (PFCL) ..... Primary paper feed from cassette.
2. Registration clutch (RCL)..... Controls the secondary paper feed.
3. MP solenoid (MPSOL) ..... Controls the MP bottom plate.
4. Cleaning lamp (CL) ..... Eliminates the residual electrostatic charge on the drum.
5. Fuser heater 1 (FUH1)..... Heats the heat roller.
6. Fuser heater 2 (FUH2)..... Heats the heat roller.
7. Fuser thermostat 1 (FUTS1) ..... Prevents overheating of the heat roller.
8. Fuser thermostat 2 (FUTS2) ..... Prevents overheating of the heat roller.
9. Cassette heater (CH) ..... Dehumidifies the cassette section. (Option)

List of correspondences of other names

No.	Name used in service manual	Name used in parts list	Part.No.
1	Paper feed clutch (PFCL)	PARTS CLUTCH 50Z35R SP	302NG94200
2	Registration clutch (RCL)	PARTS CLUTCH 50Z35R SP	302NG94200
3	MP solenoid (MPSOL)	SOLENOID MPF	302HN44160
4	Cleaning lamp (CL)	-	-
5	Fuser heater 1 (FUH1)	-	-
6	Fuser heater 2 (FUH2)	-	-
7	Fuser thermostat 1 (FUTS1)	-	-
8	Fuser thermostat 2 (FUTS2)	-	-
9	Cassette heater (CH)	HEATER DEHUMIDIFIER 120 HEATER DEHUMIDIFIER 240	302KK45060 302KK45070

TONER
www.tonerplus.com.ua

2-2-1 Upgrading the firmware

Follow the procedure to upgrade the firmware below.

* Controller Firmware
* Engine Firmware
* DP (Document Processor) Firmware
* PF (Paper Feeder) Firmware: Max 3 steps
* Option Language Data

Preparation

Extract the file that has the download firmware and store them in a SD card.

NOTE: To improve Firmware Upgrade speed, a separate SKIP file can be added to the SD card with the Firmware Upgrade package. The Skip file will allow ONLY the Firmware that has been Upgraded to a New Version to load, skipping duplicate Firmware Levels.

Procedure

1. Turn ON the main power switch and confirm if the screen shows “Ready to print” then, turn OFF the main power switch.
2. Insert SD card that has the firmware in the SD card slot.
3. Turn ON the main power switch.
4. About 10 seconds later, “FW-Update” will be displayed (this shows that downloading is ready to start).
5. Confirm that upgrading is completed.
6. Confirm that the version of the firmware is correctly displayed.
7. Turn off the main power switch by pushing it for 3 s continuously and remove the SD card.

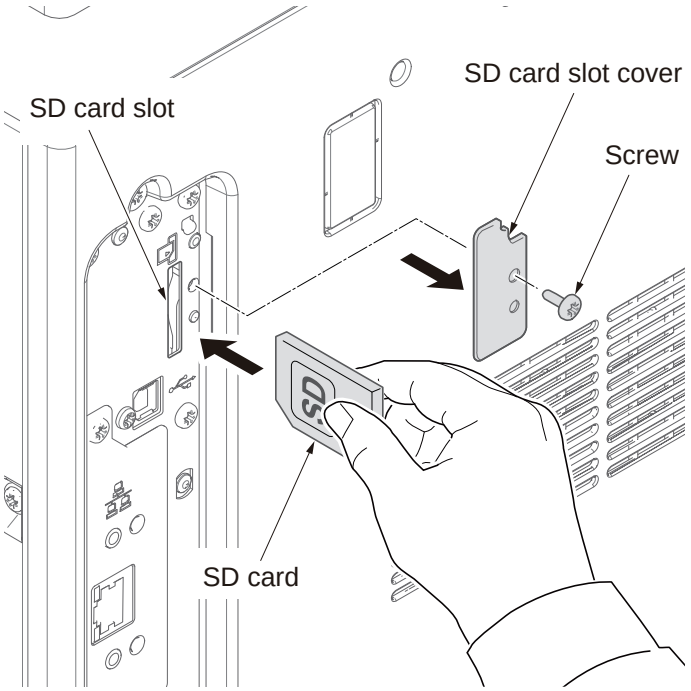

Figure 2-2-1

Caution:

Never turn off the power switch or remove the SD flash device during upgrading.

TONER
www.tonerplus.com.ua

Emergency-UPDATE

If the device is accidentally switched off and upgrading was incomplete, upgrade becomes impossible from a SD flash device.
In that case, retry upgrading after recovering the software by following the procedure below.

Preparation

The SD card must be formatted in FAT or FAT32 in advance.
Extract the main firmware to download from the file.
Rename the file which was extracted from the archive. [DL_CTRL.2NN] to [KM_EMRG.2NN]
Copy the all extracted files to the root of the SD card.

Procedure

1. Turn the main power switch off.
2. Install the SD card which contains the firmware into the SD card slot on the machine.
3. Turn the main power switch on.
4. Rewriting of the PWB software will start for restoration.
   “Emergency Update” is displayed on the LCD of the operation panel.
5. "Completed" will be displayed when rewriting is successful.
   * : "Failed" will be displayed when rewriting is failed.
6. Turn the main power switch off.
7. Wait for several seconds and then remove the SD card from the SD card slot.
8. Extract the firmware to download from the archive and copy to the root of the SD flash device.

   NOTE: Deletes the "ES_SKIP.on" file When it is contained directly under the SD card.

9. Insert the SD flash device in which the firmware was copied into the slot on the machine.
10. Perform steps 3 to 8 on the previous page.
11. Turn the main power switch on.
12. Perform maintenance item U000 (Print a maintenance report) to check that the version of ROM U109 has been upgraded.

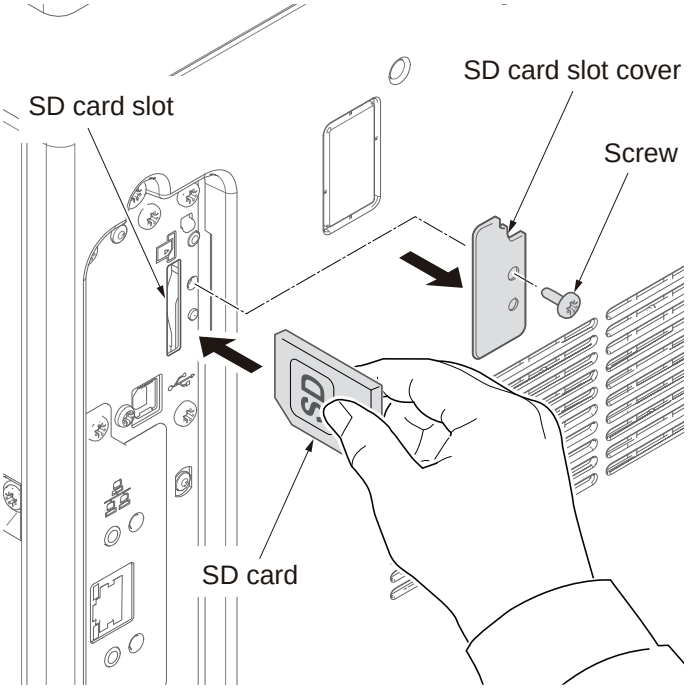

Figure 2-2-2

TONER
www.tonerplus.com.ua

2-2-2 Main/Engine PWB (M/EPWB)

(1) Connector position

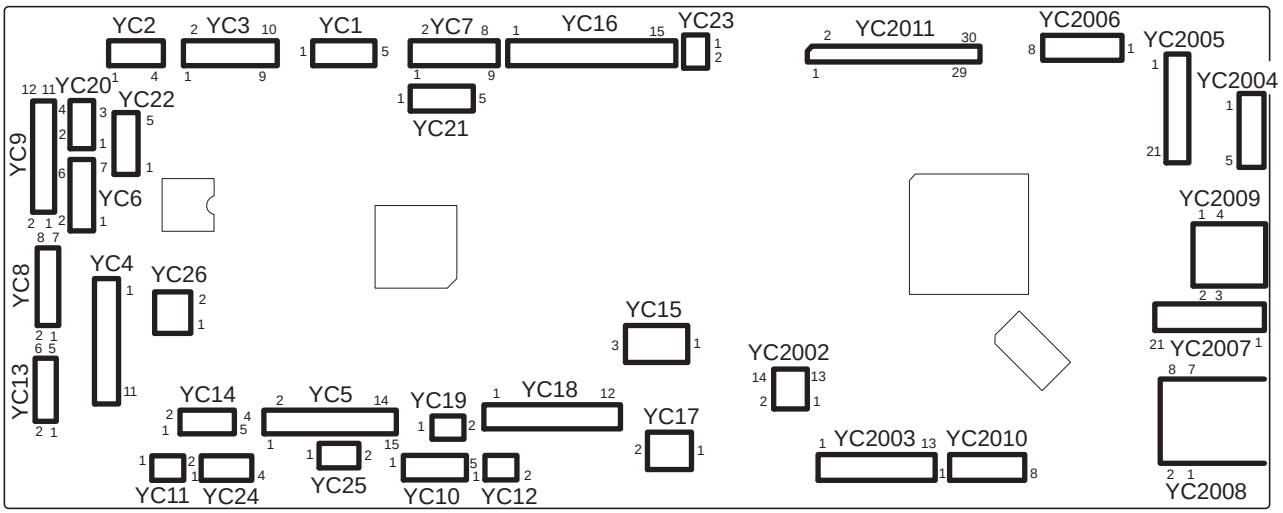

Figure 2-2-3

(2) PWB photograph

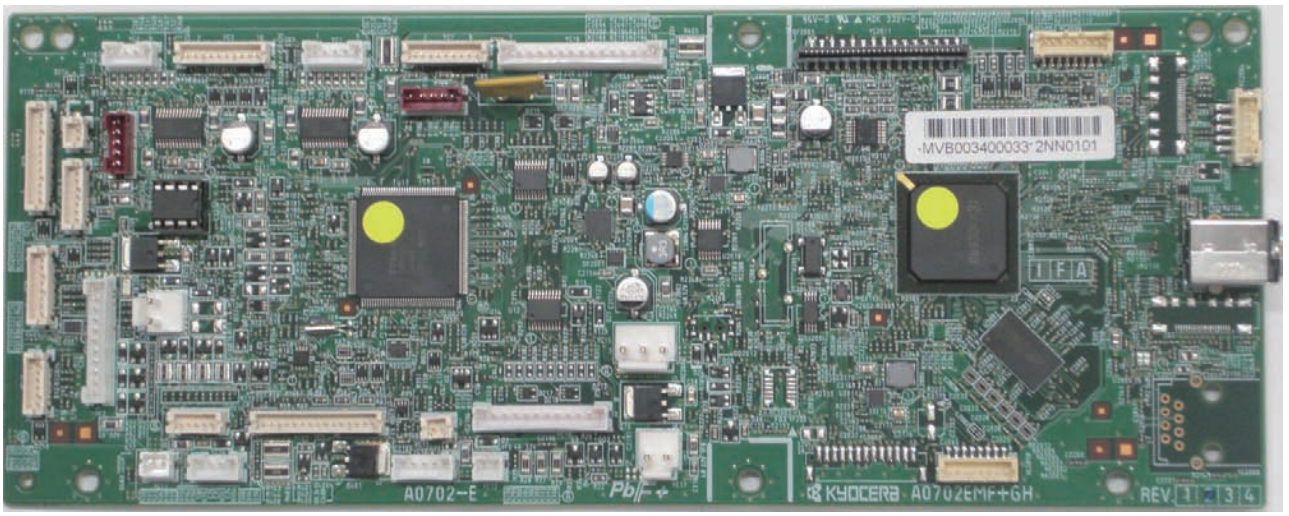

TONER
www.tonerplus.com.ua

Figure 2-2-4

(3) Connector lists

Connector	Pin	Signal	I/O	Voltage	Description
YC1	1	SCANNER_B-	O	0/24 V DC(pulse)	ISUM drive control signal
Connected to scanner motor	2	SCANNER_B	O	0/24 V DC(pulse)	ISUM drive control signal
	3	SCANNER_A	O	0/24 V DC(pulse)	ISUM drive control signal
	4	SCANNER_A-	O	0/24 V DC(pulse)	ISUM drive control signal
	5	NC	-	-	Not used
YC2	1	DU B-	O	0/24 V DC(pulse)	DUM drive control signal
Connected to duplex motor	2	DU B	O	0/24 V DC(pulse)	DUM drive control signal
	3	DU A	O	0/24 V DC(pulse)	DUM drive control signal
	4	DU A-	O	0/24 V DC(pulse)	DUM drive control signal
YC3	1	GND	-	-	Ground
Connected to high voltage PWB	2	SISEL	O	Analog	Separation DC shift signal
	3	SREM	O	0/3.3 V DC	Separation DC: On/Off
	4	MISENS	I	Analog	Charging current detection signal
	5	MCNT	O	0/3.3 V DC(pulse)	Charging DC control signal
	6	TCNT	O	0/3.3 V DC(pulse)	Transfer DC control signal
	7	TREM	O	0/3.3 V DC	Transfer DC: On/Off
	8	DBDCCNT	O	0/3.3 V DC(pulse)	Developer DC shift signal
	9	DBCLK	O	0/3.3 V DC(pulse)	Developer AC clock signal
	10	+24VIL	O	24 V DC	24 V DC power output to HVU
YC4	1	FEED_CL_REM	O	0/24 V DC	PFCL:On/Off
Connected to paper fed clutch, registration clutch, MPF solenoid, main motor	2	+24V4	O	24 V DC	24 V DC power output to PFCL
	3	REG_CL_REM	O	0/24 V DC	RCL: On/Off
	4	+24V4	O	24 V DC	24 V DC power output to RCL
	5	MPF_SOL_REM	O	0/24 V DC	MPSOL: On/Off
	6	+24V4	O	24 V DC	24 V DC power output to MPSOL
	7	MAIN_READY	I	0/3.3 V DC	MM ready signal
	8	MAIN_CLK	O	0/3.3 V DC(pulse)	MM clock signal
	9	MAIN_REM	O	0/3.3 V DC	MM: On/Off
	10	GND	-	-	Ground
	11	+24VIL	O	24 V DC	24 V DC power output to MM

TONER
www.tonerplus.com.ua

Connector	Pin	Signal	I/O	Voltage	Description
YC5	1	PAPLSIZE3	I	0/3.3 V DC	PLSW: On/Off
Connected to paper width SW, paper length sw, MP paper sensor, paper sen-sor, registra-tion switch	2	PAPLSIZE2	I	0/3.3 V DC	PLSW: On/Off
	3	GND	-	-	Ground
	4	PAPLSIZE1	I	0/3.3 V DC	PLSW: On/Off
	5	PAPWSIZE1	I	0/3.3 V DC	PWSW: On/Off
	6	GND	-	-	Ground
	7	+3.3V3LED	O	3.3 V DC	3.3 V DC power output to MPPS
	8	GND	-	-	Ground
	9	MPF_EMPTY	I	0/3.3 V DC	MPPS: On/Off
	10	+3.3V4LED	O	3.3 V DC	3.3 V DC power output to PS
	11	GND	-	-	Ground
	12	PAPEMP	I	0/3.3 V DC	PS: On/Off
	13	+3.3V4LED	O	3.3 V DC	3.3 V DC power output to RS
	14	GND	-	-	Ground
	15	RESIST	I	0/3.3 V DC	RS: On/Off
YC6	1	FUSER_JAM	I	0/3.3 V DC	ES: On/Off
Connected to fuser eject sensor, Fuser thermister1, fuserthermis-ter 2	2	GND	-	-	Ground
	3	+3.3V4LED	O	3.3 V DC	3.3 V DC power output to ES
	4	TH1	I	Analog	FTH1 detection voltage
	5	GND	-	-	Ground
	6	TH2	I	Analog	FTH2 detection voltage
	7	GND	-	-	Ground
YC7	1	+3.3V4LED	O	3.3 V DC	3.3 V DC power output to HPS
Connected to home posi-sion sensor, open/close sensor, original size sensor	2	GND	-	-	Ground
	3	SCA_HP	I	0/3.3 V DC	HPS: On/Off
	4	+3.3V4LED	O	3.3 V DC	3.3 V DC power output to ODSW
	5	GND	-	-	Ground
	6	SCA_COVER	I	0/3.3 V DC	ODSW: On/Off
	7	GND	-	-	Ground
	8	SCA_SIZE	I	0/3.3 V DC	OSS: On/Off
	9	+3.3V4	O	3.3 V DC	3.3 V DC power output to OSS

TONER
www.tonerplus.com.ua

Connector	Pin	Signal	I/O	Voltage	Description
YC8	1	+3.3V4	O	3.3 V DC	3.3 V DC power output to SPWB
Connected to sub PWB, container connect PWB	2	GND	-	-	Ground
	3	SUB_DATA	O	0/3.3 V DC	SPWB EEPROM data signal
	4	SUB_CLK	I/O	0/3.3 V DC(pulse)	SPWB EEPROM clock signal
	5	+3.3V4	O	3.3 V DC	3.3 V DC power output to TCONTPWB
	6	TC_CLK	O	0/3.3 V DC(pulse)	TCONTPWB clock signal
	7	TC_DATA	I/O	0/3.3 V DC	TCONTPWB data signal
	8	GND	-	-	Ground
YC9	1	+3.3V4	O	3.3 V DC	3.3 V DC power output to DRPWB
Connected to wastetoner sensor, cleaning lamp, toner sensor	2	DRUM_SCL	O	0/3.3 V DC(pulse)	DRPWB EEPROM clock signal
	3	DRUM_SDA	I/O	0/3.3 V DC	DRPWB EEPROM data signal
	4	GND	-	-	Ground
	5	DRUM_TEMP			Not used
	6	ERASE2	O	0/24 V DC	CL: On/Off
	7	ERASE3	O	0/24 V DC	CL: On/Off
	8	WT_SENS	I	Analog	WTS detection signal
	9	WT_LED	O	0/3.3 V DC	WTS: On/Off
	10	+5VZD	O	5V DC	5V DC power output to TS
	11	TON_EMP	I	Analog	TS control signal
	12	GND	-	-	Ground
YC10	1	+24V4	O	24 V DC	24 V DC power output to PM
Connected to porigon motor	2	GND	-	-	Ground
	3	POL_REM	O	0/3.3 V DC	PM: On/Off
	4	POL_RDY	I	0/3.3 V DC	PM ready signal
	5	POL_CLK	O	0/3.3 V DC(pulse)	PM clock signal
YC11	1	+24V4	O	24 V DC	24 V DC power output to EFM
Connected to cooling fan	2	FAN_REM	O		EFM: On/Off
YC12	1	+24V4	O	24 V DC	24 V DC power output to LONTDM
Connected to toner motor	2	LMOT_REM	O		LCONTDM: On/Off
YC13	1	GND	-	-	Ground
Connected to temparature sensor	2	HUM_DATA	I	Analog	TEMS detection voltage(Humidity)
	3	HUM_CLK2	O	0/3.3 V DC(pulse)	TEMS clock signal
	4	HUM_CLK1	O	0/3.3 V DC(pulse)	TEMS clock signal
	5	TEM_DATA	I	Analog	TEMS detection voltage(Temperature)
	6	+3.3V0	O	3.3 V DC	3.3 V DC power output to TEMS

TONER
www.tonerplus.com.ua

Connector	Pin	Signal	I/O	Voltage	Description
YC14	1	+24VIL	O	24 V DC	24 V DC power output to PSPWB
Connected to power source PWB	2	ZCROSS	I	0/3.3 V DC	Zero-cross signal
	3	RELAYREM	O	0/3.3 V DC	Power relay signal: On/Off
	5	MHREM	O	0/3.3 V DC	MH: On/Off
	6	SHREM	O	0/3.3 V DC	SH: On/Off
YC15	1	GND	-	-	Ground
Connected to power source PWB	2	+24V0	I	24 V DC	24 V DC power input from PSPWB
	3	+24V0	O	24 V DC	24 V DC power output to RCSW (Interlock switch)
YC16	1	GND	-	-	Ground
Connected to DP main PWB	2	GND	-	-	Ground
	3	GND	-	-	Ground
	4	GND	-	-	Ground
	5	24V4	O	24 V DC	24 V DC power output to DPMPWB
	6	24V4	O	24 V DC	24 V DC power output to DPMPWB
	7	3.3V4	O	3.3 V DC	3.3 V DC power output to DPMPWB
	8	3.3V4	O	3.3 V DC	3.3 V DC power output to DPMPWB
	9	DP_CLK	O	0/3.3 V DC(pulse)	DP clock signal
	10	DP_SO	O	0/3.3 V DC	Serial communication data signal
	11	DP_SEL	O	0/3.3 V DC	DP select signal
	12	DP_SI	I	0/3.3 V DC	Serial communication data signal
	13	DP_RDY	I	0/3.3 V DC	DP ready signal
	14	DP_TMG	I	0/3.3 V DC	DPTS: On/Off
	15	DP_OPEN	I	0/3.3 V DC	DPOCS: On/Off
YC17	1	+24V4	O	24 V DC	24 V DC power output to PFMPWB
Connected to PF main PWB	2	PGND	-	-	Ground
YC18	1	GND	-	-	Ground
Connected to PF main PWB	2	+3.3V3	O	3.3 V DC	3.3 V DC power output to PFMPWB
	3	+3.3V4	O	3.3 V DC	3.3 V DC power output to PFMPWB
	4	PFCLK	O	0/3.3 V DC(pulse)	PF clock signal
	5	PFSO	O	0/3.3 V DC	Serial communication data signal
	6	PFSI	I	0/3.3 V DC	Serial communication data signal
	7	PFSET	I	0/3.3 V DC	PF set signal
	8	PFRDY	I	0/3.3 V DC	PF ready signal
	9	PFSEL0	O	0/3.3 V DC	PF select signal
	10	PFSEL1	O	0/3.3 V DC	PF select signal

TONER
www.tonerplus.com.ua

Connector	Pin	Signal	I/O	Voltage	Description
YC18	11	PFSEL2	O	0/3.3 V DC	PF select signal
Connected to PF main PWB	12	PFPAUSE	O	0/3.3 V DC	PF control signal
YC19	1	FCOVER	I	0/3.3 V DC	FCSW: On/Off
Connected to front cover switch	2	GND	-	-	Ground
YC20	1	POWERSW	I	0/3.3 V DC	PSSW: On/Off
Connected to power switch and right cover switch	2	GND	-	-	Ground
	3	SCOVERF	I	0/3.3 V DC	RCSW: On/Off
	4	GND	-	-	Ground
YC24	1	GND	-	-	Ground
Connected to	2	DC1_SET	I	0/3.3 V DC	Key counter set signal
	3	DC1_COUNT	O	0/24V DC	Key counter count signal
	4	24V4	O	24 V DC	24 V DC power output to Key counter
YC26	1	GND	-	-	Ground
Connected to right cover open/close switch	2	+24VIL1	I	24V DC	24 V DC power input from interlock switch
YC2006	1	3.3V2	O	3.3 V DC	3.3 V DC power output to OPPWB
Connected to operation panel PWB	2	GND	-	-	Ground
	3	PRESETN	O	0/3.3 V DC	Panel reset signal
	4	POWER_KEY	I	0/3.3 V DC	Sleep key signal
	5	PANRXD	I	0/3.3 V DC	Serial communication data signal
	6	PANTXD	O	0/3.3 V DC	Serial communication data signal
	7	LCDCON	O	0/3.3 V DC	LCD control signal
	8	24V4	O	24 V DC	24 V DC power output to OPPWB
YC2009	1	VBUS	O	5V DC	5V DC power input
Connected to USB host	2	D-	O	LVDS	USB data signal(-)
	3	D+	O	LVDS	USB data signal(+)
	4	GND	-	-	Ground
YC2010	1	BDN	I	0/3.3 V DC	Beam detect signal
Connected to APC PWB	2	3.3V4	O	3.3 V DC	3.3 V DC power output to APCPWB
	3	VCONT	O	Analog	Leser control signal
	4	GND	-	-	Ground
	5	SHN	O	0/3.3 V DC	Sample/hold signal
	6	VDON	O	LVDS	Video data signal(-)

TONER
www.tonerplus.com.ua

Connector	Pin	Signal	I/O	Voltage	Description
YC2010	7	VDOP	O	LVDS	Video data signal(+)
Connected to APC PWB	8	LDEN	O	0/3.3 V DC	Laser output permission signal
YC2011	1	GND	-	-	Ground
Connected to CIS	2	LEDA1	O	6.27 to 6.93V DC	CIS LED anode
	3	LEDCB1	O	1.47 to 4.43V DC	CIS LED cathode(blue)
	4	LEDCG1	O	1.47 to 4.43V DC	CIS LED cathode(green)
	5	LEDCR1	O	2.97 to 5.43V DC	CIS LED cathode(red)
	6	GND	-	-	Ground
	7	3.3V4F	O	3.3 V DC	3.3 V DC power output to CIS
	8	3.3V4F	O	3.3 V DC	3.3 V DC power output to CIS
	9	VREF	O	1.0 to 1.2V DC	CIS reference voltage
	10	MODE	O	0/3.3 V DC	Resolution select signal
	11	GND	-	-	Ground
	12	CLK	O	0/3.3 V DC(pulse)	DC(pulse) Clock signal
	13	GND	-	-	Ground
	14	GND	-	-	Ground
	15	SP	O	0/3.3 V DC	Sampling signal
	16	GND	-	-	Ground
	17	GND	-	-	Ground
	18	Vout3	I	Analog	CIS Image output signal
	19	GND	-	-	Ground
	20	Vout2	I	Analog	CIS Image output signal
	21	GND	-	-	Ground
	22	Vout1	I	Analog	CIS Image output signal
	23	GND	-	-	Ground
	24	Vout0	I	Analog	CIS Image output signal
	25	GND	-	-	Ground
	26	LEDA2	O	6.27 to 6.93V DC	CIS LED anode
	27	LEDCB2	O	1.47 to 4.43V DC	CIS LED cathode(blue)
	28	LEDCG2	O	1.47 to 4.43V DC	CIS LED cathode(green)
	29	LEDCR2	O	2.97 to 5.43V DC	CIS LED cathode(red)
	30	GND	-	-	Ground

TONER
www.tonerplus.com.ua

(4) Detaching and refitting the PWB. (M/EPWB)

Procedure

1. Remove seven screws.
2. Remove the rear cover by pulling upward and releaseing three hooks.

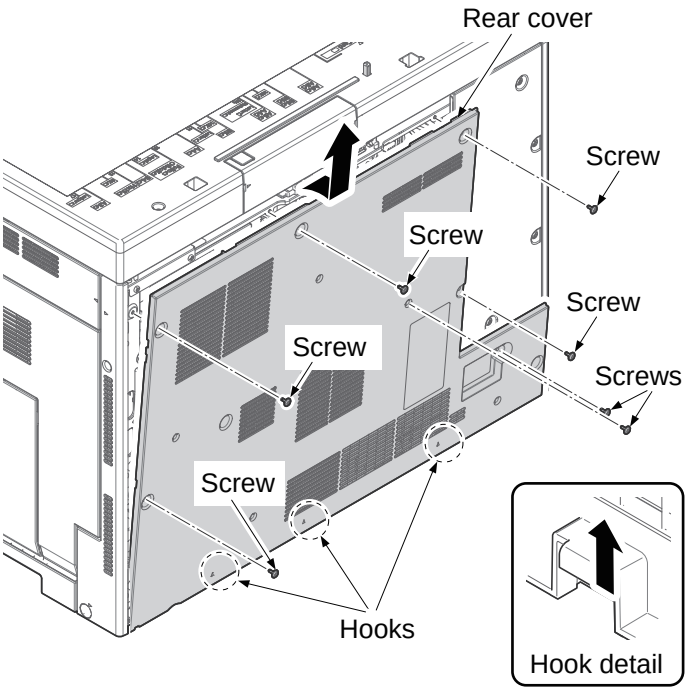

Figure 2-2-5

3. Remove six screws.
4. Remove the rear sub cover.

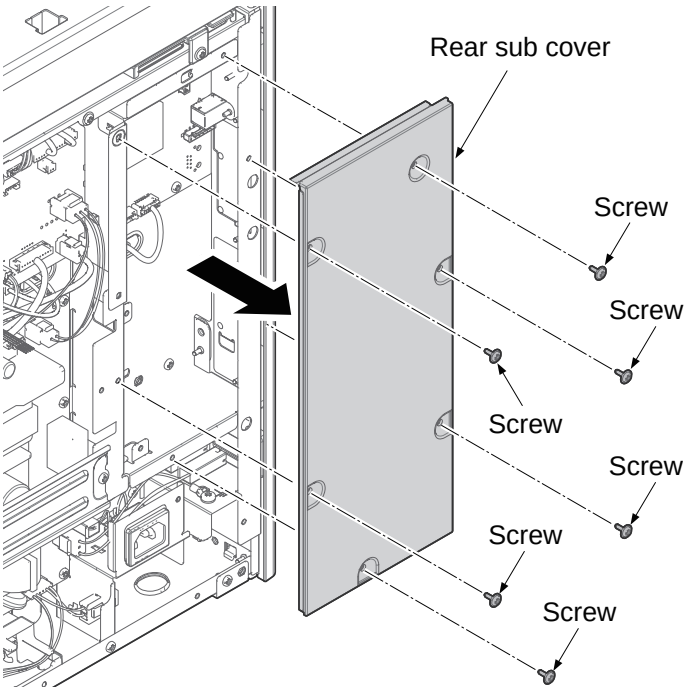

Figure 2-2-6

TONER
www.tonerplus.com.ua

5. Remove all connectors from the main/ engine PWB.

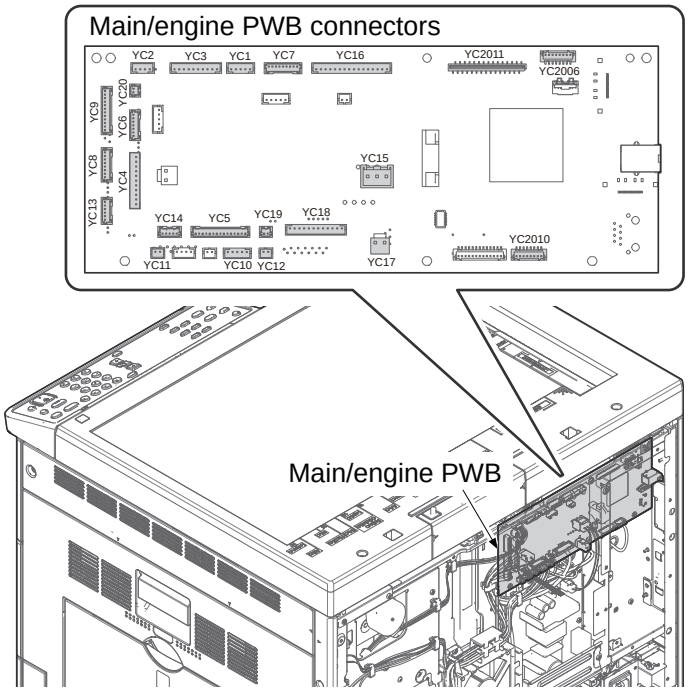

Figure 2-2-7

6. Remove three screws.
7. Remove the mounting plate.

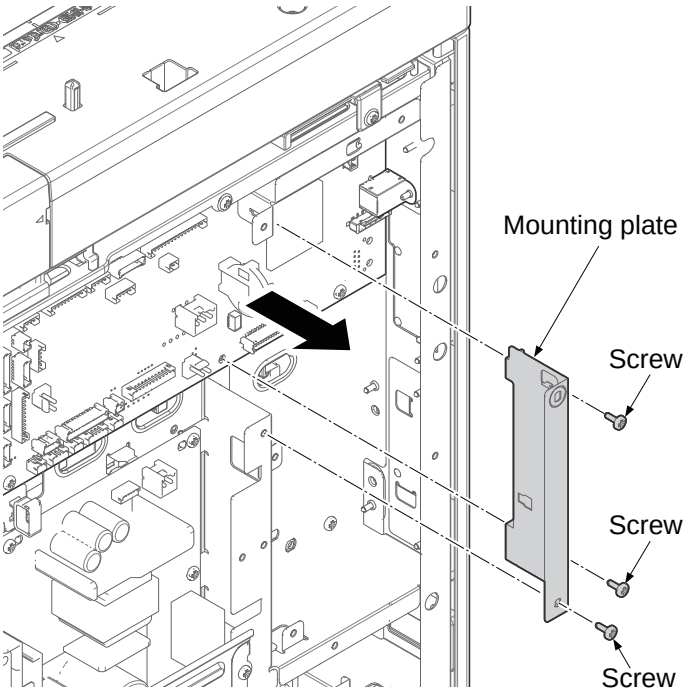

Figure 2-2-8

TONER
www.tonerplus.com.ua

8. Remove five screws.
9. Remove the main/engine PWB.
10. Check or replace the main/engine PWB and refit all the removed parts.

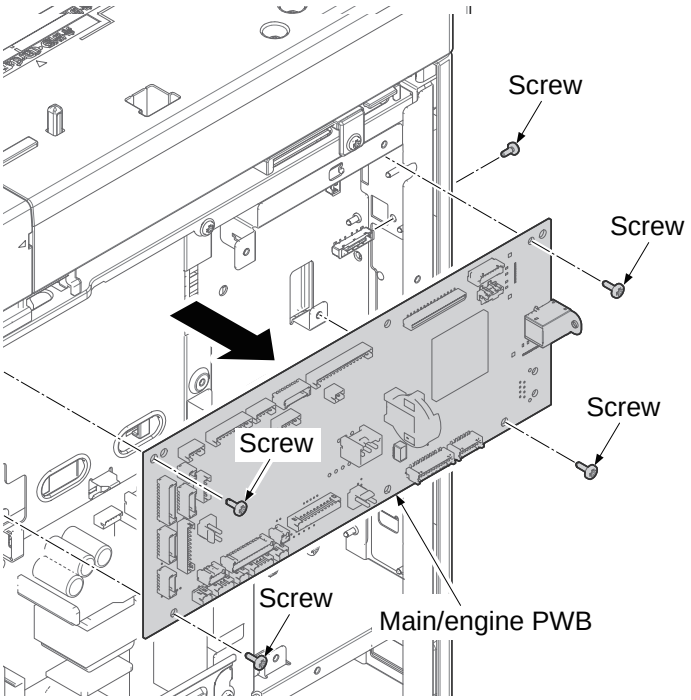

Figure 2-2-9

(5) Remarks on main/engine PWB replacement

NOTE: When replacing the PWB, remove the EEPROM (U5) from the main/engine PWB and then reattach it to the new PWB.

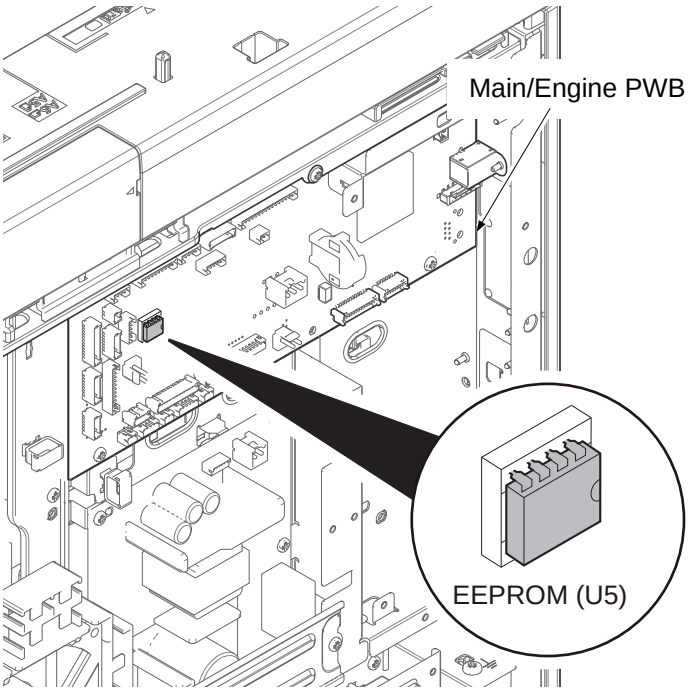

Figure 2-2-10

TONER
www.tonerplus.com.ua

NOTE: The following operations are required when replacing the main board.

1. Execute maintenance mode U004 to resolve machine number mismatch that appears after replacing the main board.
   * : When the machine number of main/engine board does not match, C0180 will be displayed.
2. Adjust the scanner image.
   (1)Input the value in the auto scanner adjustment chart by using the maintenance mode U425.
   (2)Execute the maintenance mode U411 with the auto scanner adjustment chart.
   (3)Execute [Halftone adjustment] from the system menu
3. Reactivate the license for optional products if any were installed.
   (1)Reactivate ID CARD AUTHENTICATION KIT B).
   (2)Register an ID card again by using the maintenance mode U222.
4. Import data if any was exported from the machine before replacing the main board by using the maintenance mode U917. (The export and import is also available via KM-Net Viewer)
5. Register the initial user settings and FAX settings from the system menu or command center.
6. Execute the maintenance mode as below if necessary.

No.	Main machine related maintenance modes
U250	Checking/clearing the maintenance cycle
U251	Checking/clearing the maintenance counter
U253	Switching between double and single counts
U260	Selecting the timing for copy counting
U326	Setting the black line cleaning indication
U341	Specific paper feed location setting for printing function
U343	Switching between duplex/simplex copy mode
U345	Setting the value for maintenance due indication
U402	Adjusting margins of image printing
U403	Adjusting margins for scanning an original on the contact glass
U404	Adjusting margins for scanning an original from the DP
U407	Adjusting the leading edge registration for memory image printing
U425	Setting the target
U429	Setting the offset for the color balance
U432	Setting the center offset for the exposure
U470	Setting the JPEG compression ratio

No.	Fax related maintenance modes
U603	Setting user data 1
U604	Setting user data 2
U610	Setting system 1
U611	Setting system 2
U612	Setting system 3
U615	Setting system 6
U625	Setting the transmission system 1
U695	FAX function customize

TONER
www.tonerplus.com.ua

2-2-3 High voltage PWB(HVPWB)

(1) Connector position

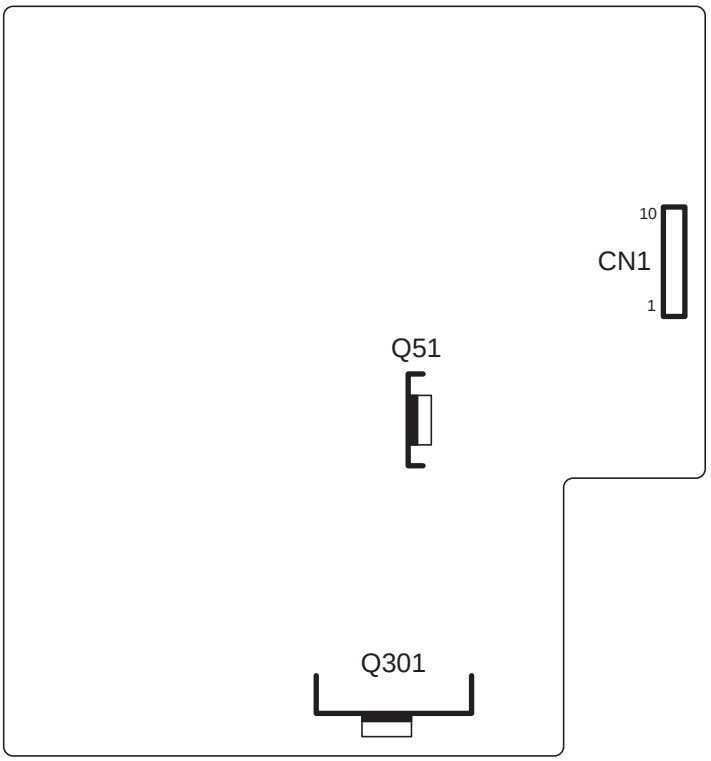

Figure 2-2-11

(2) PWB photograph

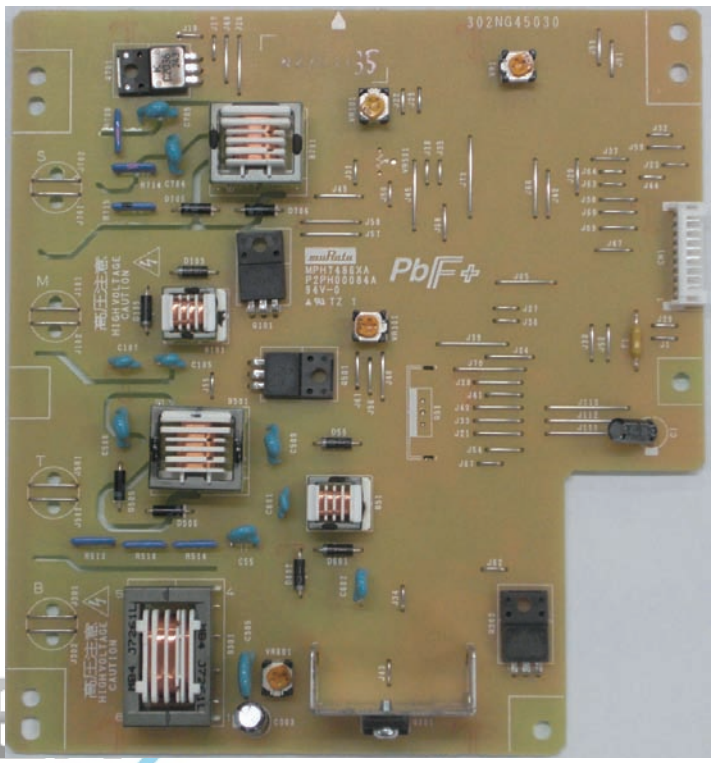

Figure 2-2-12

TONE
www.tonerplus.com.ua

(3) Connector lists

Connector	Pin	Signal	I/O	Voltage	Description
YC1	1	+24VIL	I	24 V DC	24 V DC power input from M/EPWB
Connected to main/engin PWB	2	DBCLK	I	0/3.3 V DC(pulse)	Developer clock signal
	3	DBDCCNT	I	0/3.3 V DC(pulse)	Developer DC output shift signal
	4	TREM	I	0/3.3 V DC	Transfer DC: On/Off
	5	TCNT	I	0/3.3 V DC(pulse)	Transfer DC control signal
	6	MCNT	I	0/3.3 V DC(pulse)	Charging DC control signal
	7	MISENS	O	Analog	Charging current detection signal
	8	SREM	I	0/3.3 V DC	Separation DC: On/Off
	9	SISEL	I	0/3.3 V DC	Separation DC shift signal
	10	GND	-	-	Ground

TONER
www.tonerplus.com.ua

(4) Detaching and refitting the PWB. (HVPWB)

Procedure

1. Remove the imsge scanner unit.
2. Pull out the cassette from the main unit.
3. Open the front cover.

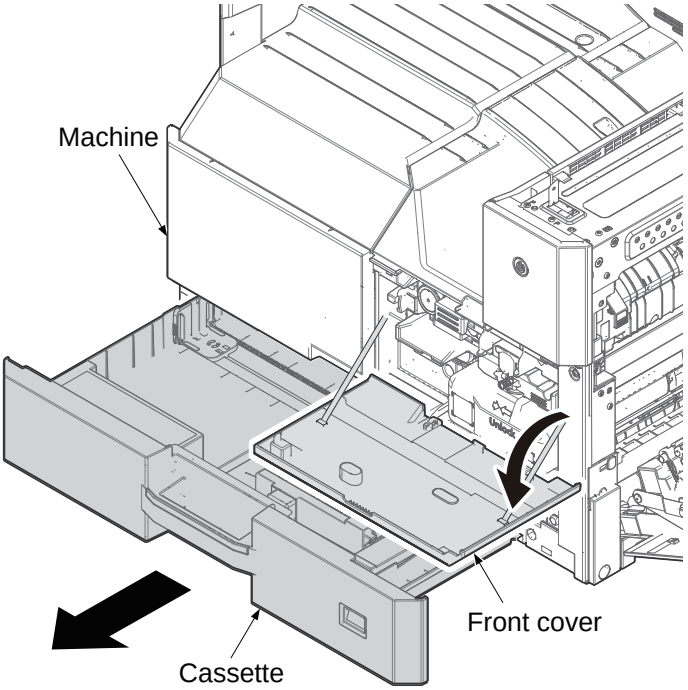

Figure 2-2-13

4. Release it by pinching the lock lever and then remove the waste toner box forward.

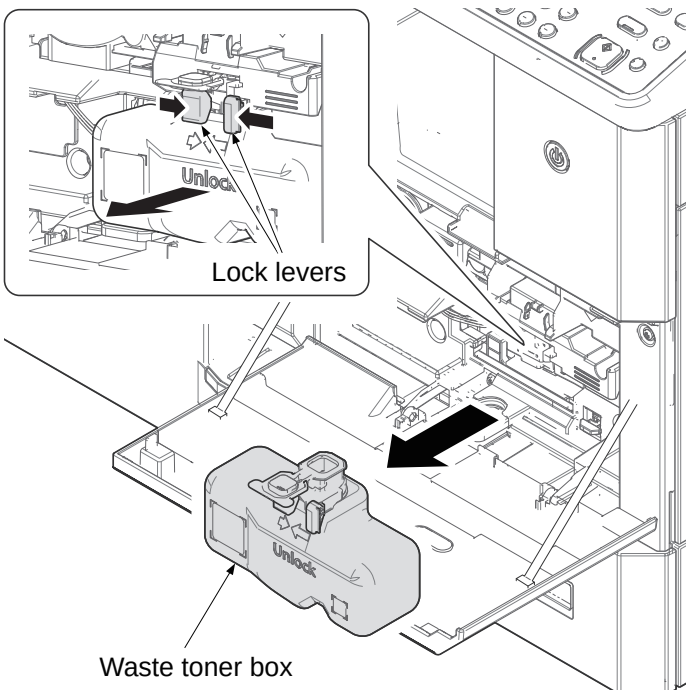

Figure 2-2-14

TONER
www.tonerplus.com.ua

5. Release the lock lever by sliding to left direction.
6. Pull out the toner container.

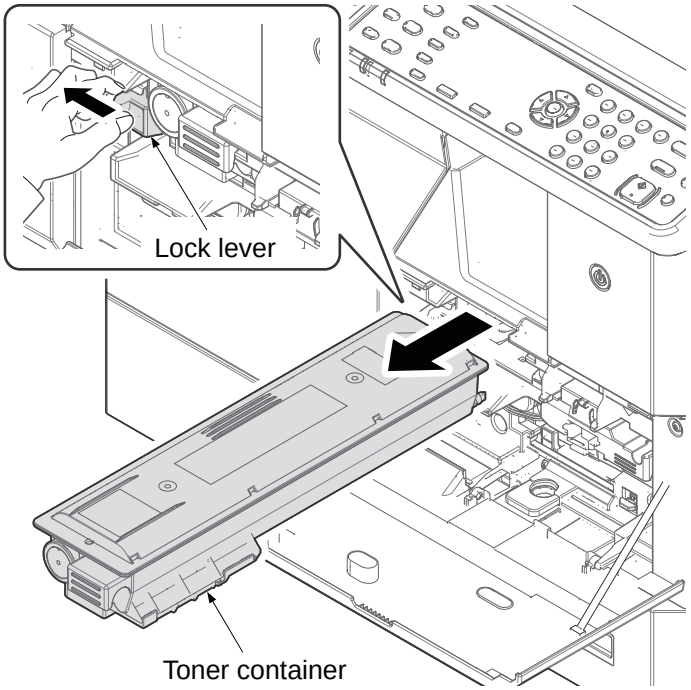

Figure 2-2-15

7. Release the developer electric wire from the hook of the electric wire and then remove the electric wire cover by releasing the lock lever.
8. Remove the developer electric wire connector.

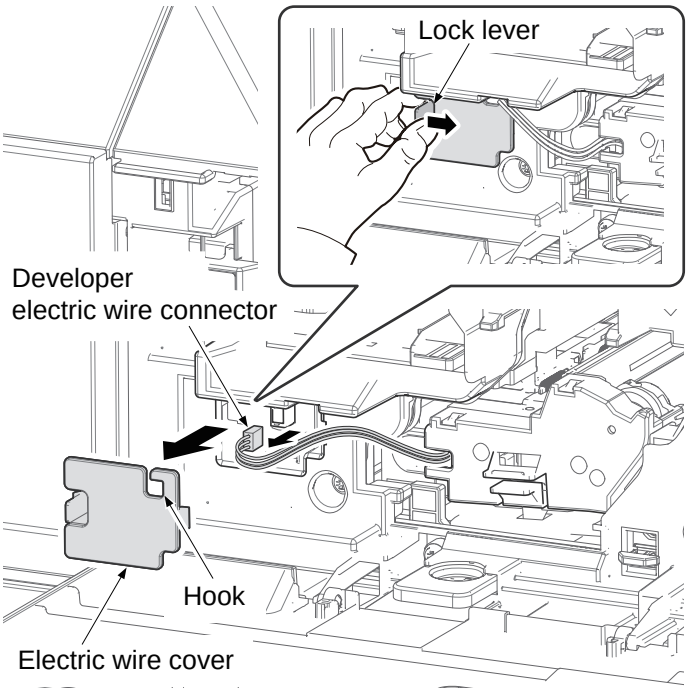

Figure 2-2-16

TONER
www.tonerplus.com.ua

9. Pull the developer evacuation lever forward.
10. Remove the developer unit by pulling forward.
11. Check or replace the developer unit and refit all the removed parts.

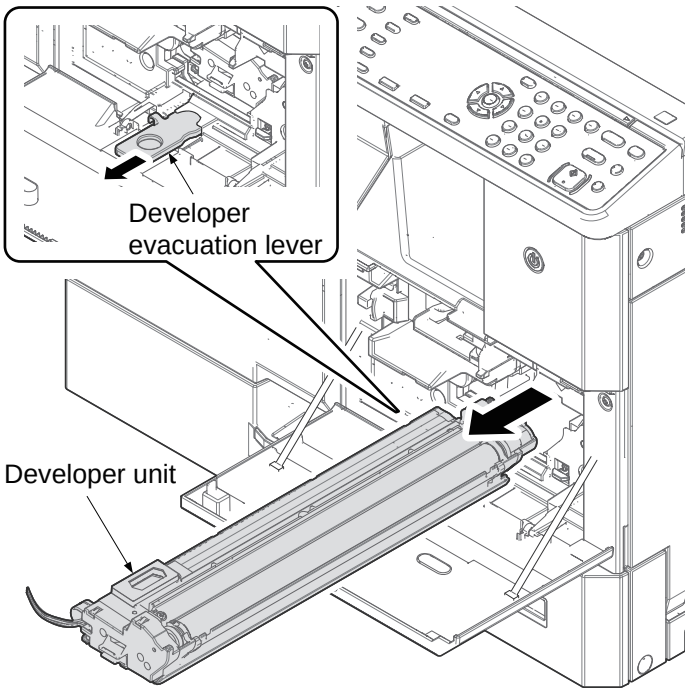

Figure 2-2-17

12. Open the right cover.
13. Remove the screw.
14. Remove the drum unit by pulling it forward.
    *: Be careful to not touch a drum or not to hit.
15. Check or replace the drum unit and refit all the removed parts.

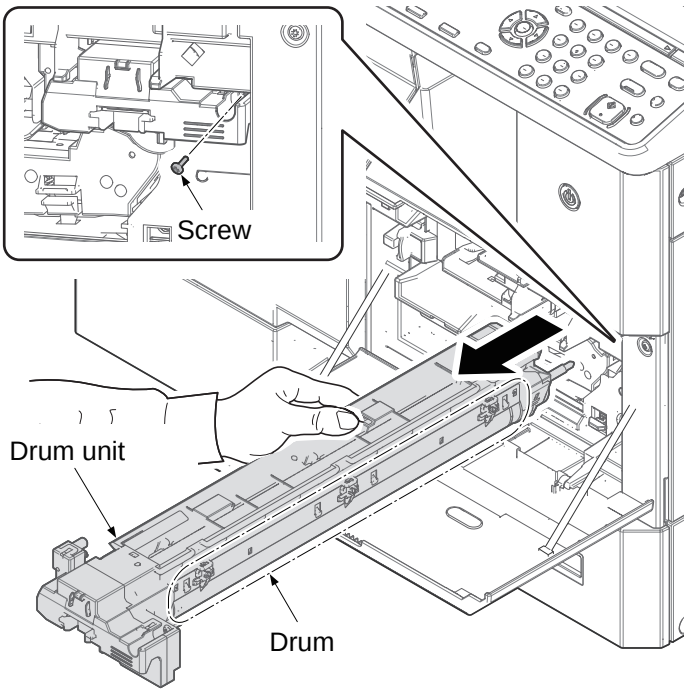

Figure 2-2-18

TONER
www.tonerplus.com.ua

16. Unhook two hooks using flat screw driver and then remove the front left cover by pulling upward.

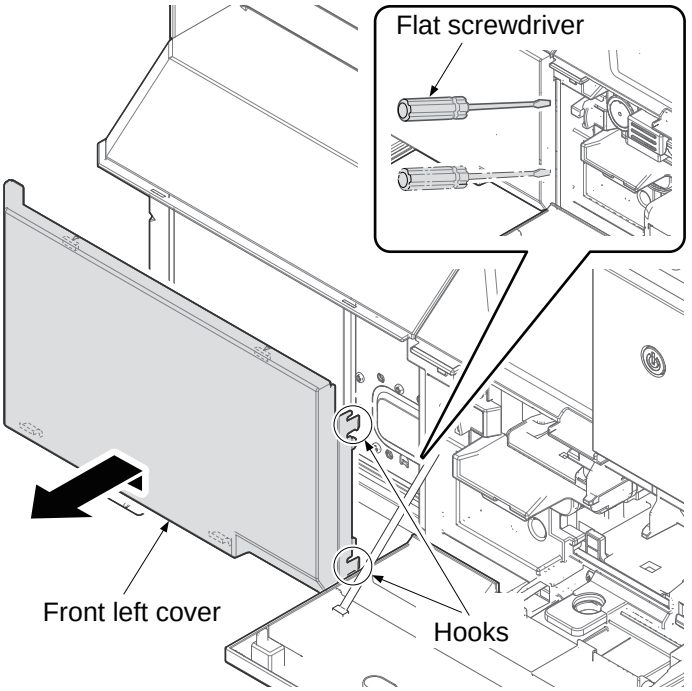

Figure 2-2-19

17. Remove the keft tray.

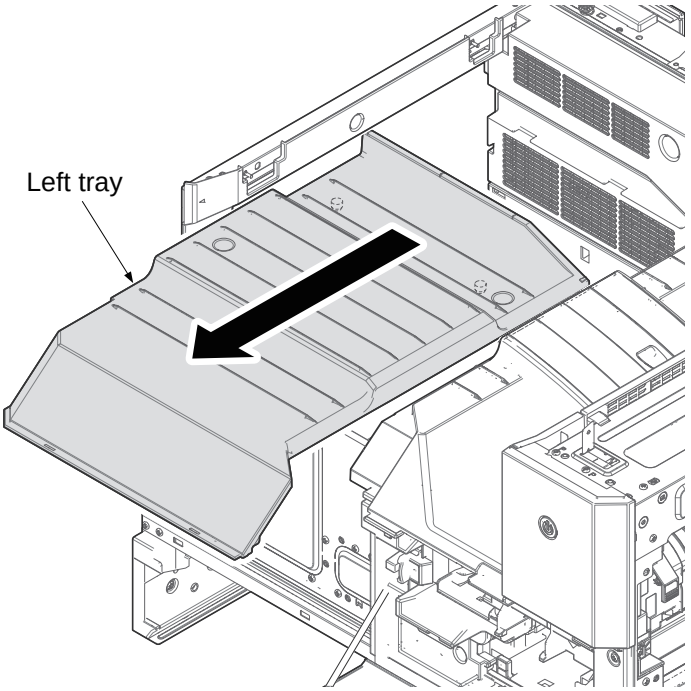

Figure 2-2-20

TONER
www.tonerplus.com.ua

18. Remove a screw.
19. Remove the right tray.

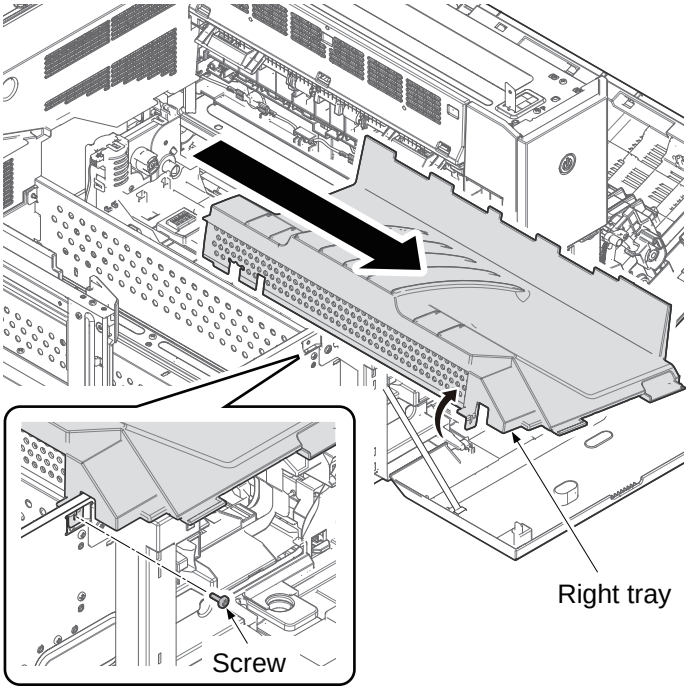

Figure 2-2-21

20. Remove two connectors.

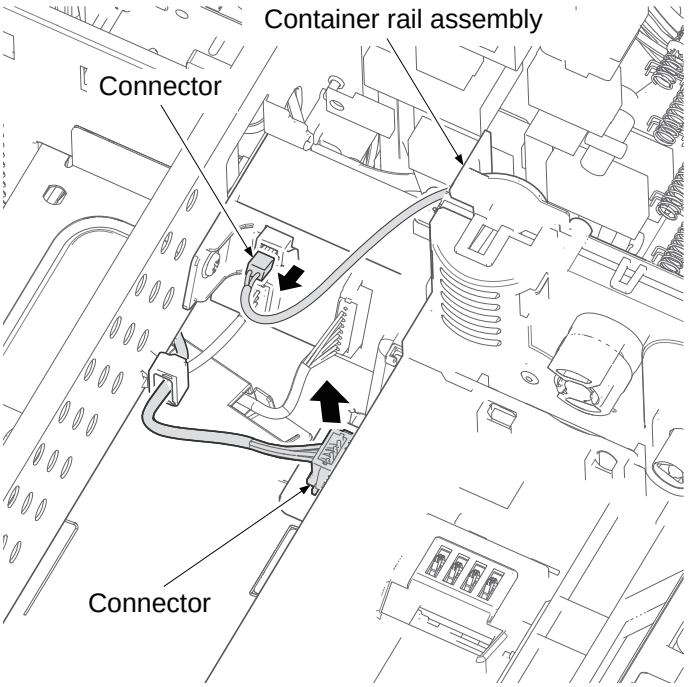

Figure 2-2-22

TONER
www.tonerplus.com.ua

21. Remove a screw.
22. Remove it forward after raising a little the front side of the developer rail assembly.

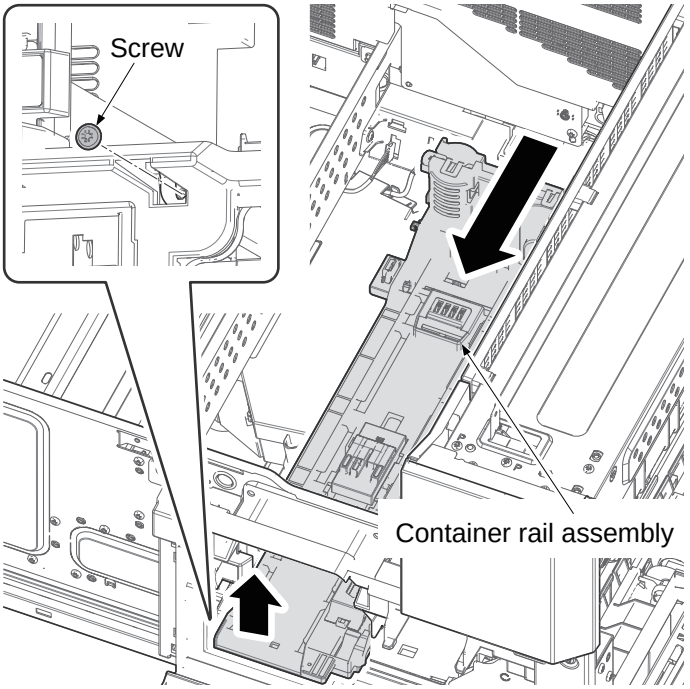

Figure 2-2-23

1. Remove the screw.
2. Remove the exit rear cover forward with releasing two projections by lifting it up.

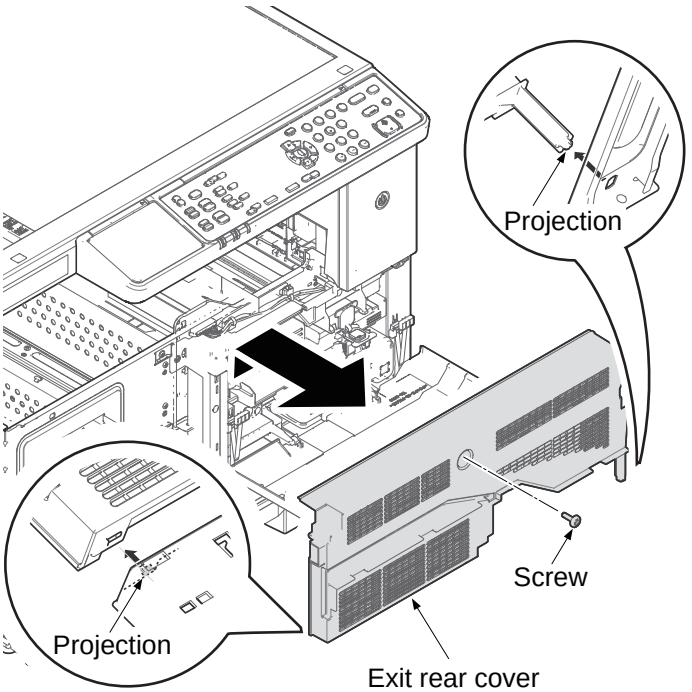

Figure 2-2-24

TONER
www.tonerplus.com.ua

3. Remove the connector from the high voltage PWB.
4. Remove three screws and unhook the hook and then remove the high voltage PWB.
5. Check or replace the high voltage PWB and refit all the removed parts.

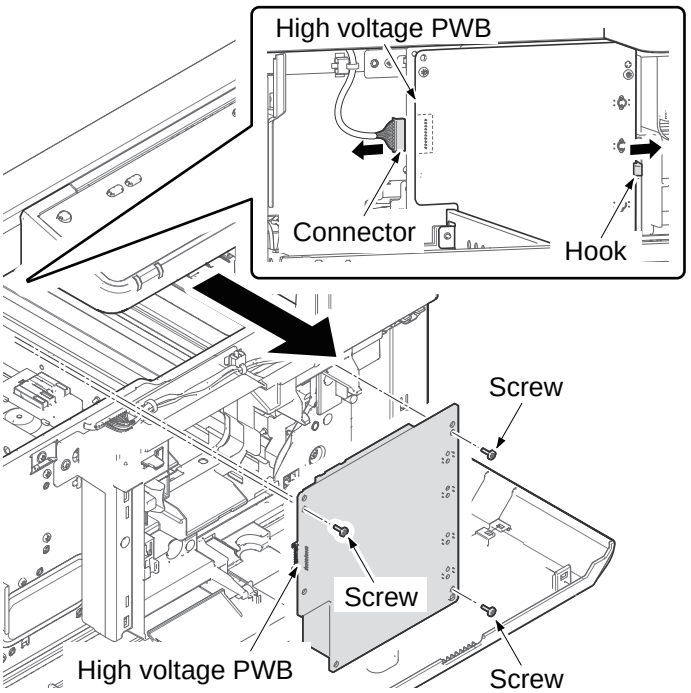

Figure 2-2-25

TONER
www.tonerplus.com.ua

2-2-4 Power source PWB (PSPWB)

(1) Connector position

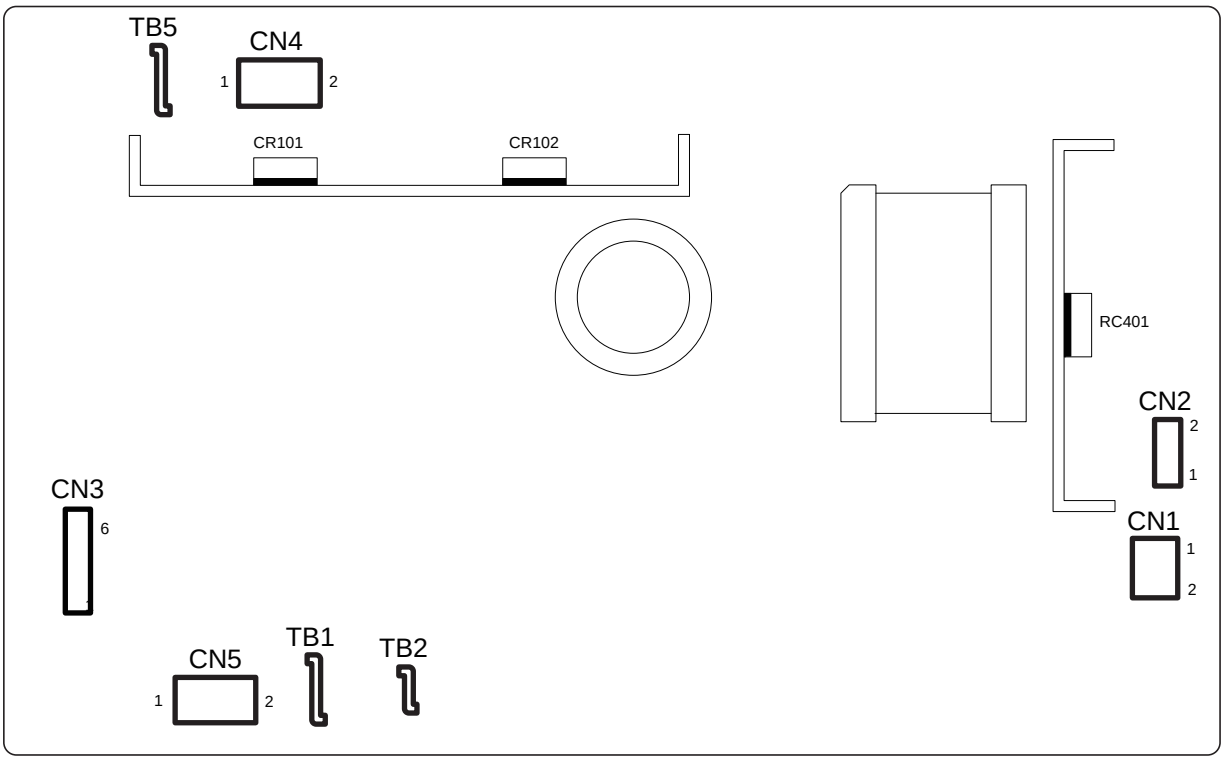

Figure 2-2-26

(2) PWB photograph

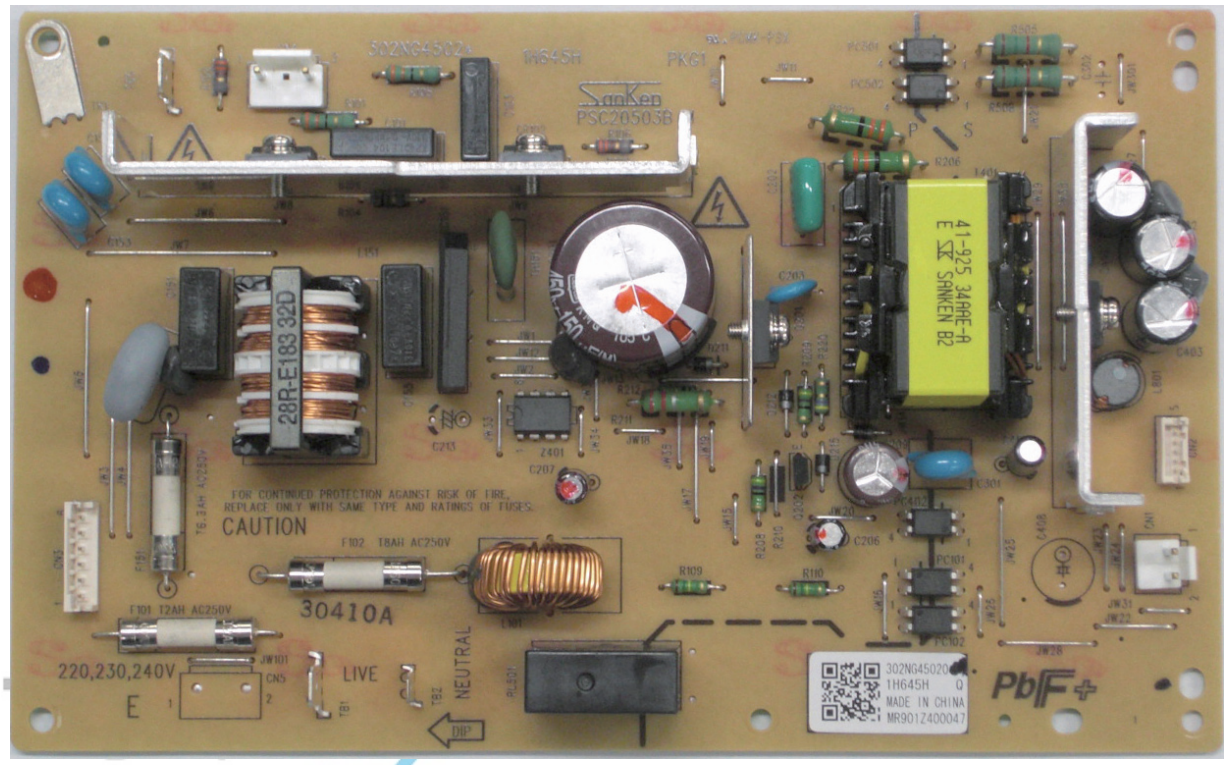

www.tonerplus.com.ua

Figure 2-2-27

(3) Connector lists

Connector	Pin	Signal	I/O	Voltage	Description
TB1	1	AC LIVE	I	120 V AC 220-240 V AC	AC power input
Connect to inlet					
TB2	1	AC NEUTRAL	I	120 V AC 220-240 V AC	AC power input
Connect to inlet					
TB5	1	HCOM	I	120 V AC 220-240 V AC	AC power input
Connect to fuse themo-stat					
CN1	1	+24V0	O	24 V DC	24 V DC power output to M/EPWB
Connect to main/engine PWB	2	GND	-	-	Ground
CN2	1	MHREM	I	0/3.3 V DC	MH: On/Off
Connect to main/engine PWB	2	SHREM	I	0/3.3 V DC	SH: On/Off
	3	RELAYREM	I	0/3.3 V DC	Power relay signal: On/Off
	4	ZCROSS	I	0/3.3 V DC	Zero-cross signal
	5	+24VIL	I	24 V DC	24 V DC power output to M/EPWB
CN3	1	LIVE	O	120 V AC 220-240 V AC	AC power output to CH
Connect to cassette heater	2	LIVE	O	120 V AC 220-240 V AC	AC power output to PFCH
	3	NC	-	-	Not used
	4	NC	-	-	Not used
	5	NEUTRAL	O	120 V AC 220-240 V AC	AC power output to CH
	6	NEUTRAL	O	120 V AC 220-240 V AC	AC power output to PFCH
CN4	1	MH	O	120 V AC 220-240 V AC	MH: On/Off
Connect to fuse heater1, 2	2	SH	O	120 V AC 220-240 V AC	SH: On/Off
CN5	1	AC LIVE		120 V AC 220-240 V AC	AC power input from MSW
Connect to main switch	1	AC NEUTRAL		120 V AC 220-240 V AC	AC power input from MSW

TONER
www.tonerplus.com.ua

(4) Detaching and refitting the PWB. (PSPWB)

Procedure

1. Remove seven screws.
2. Remove the rear cover by pulling upward and releaseing three hooks.

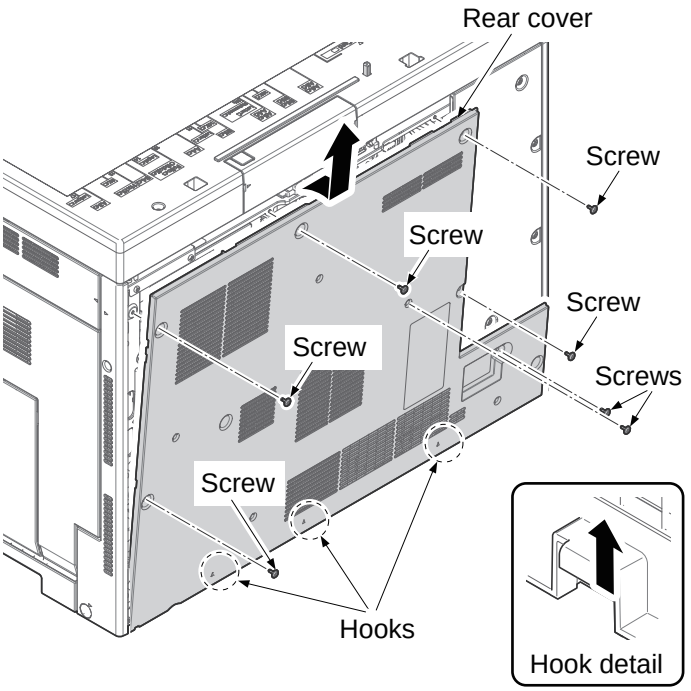

Figure 2-2-28

3. Remove two screws and then remove the mounting plate.

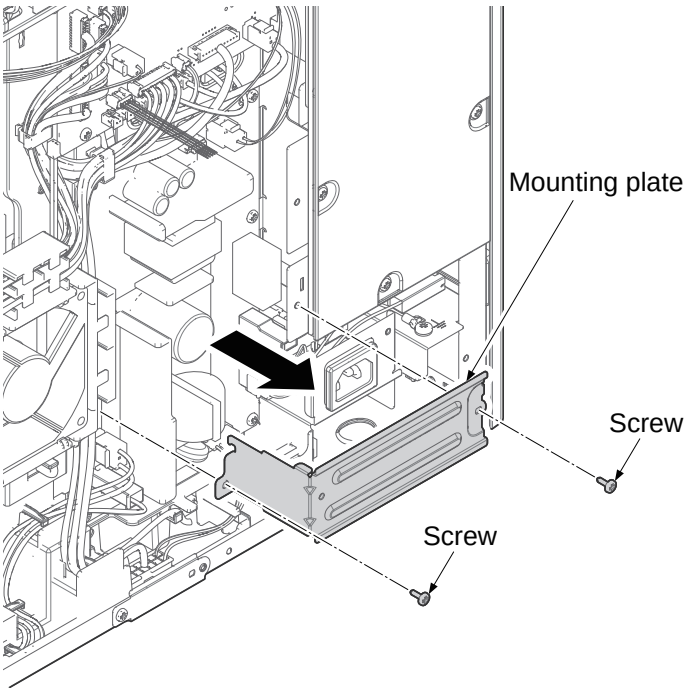

Figure 2-2-29

TONER
www.tonerplus.com.ua

4. Remove all connectors from the power source PWB.

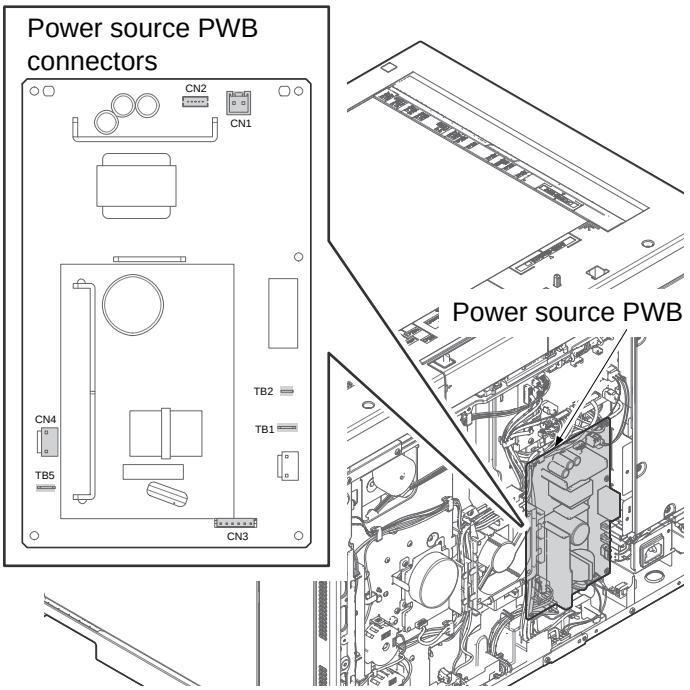

Figure 2-2-30

5. Remove five screws.
6. Remove the power source PWB.
7. Check or replace the power sorce PWB and refit all the removed parts.

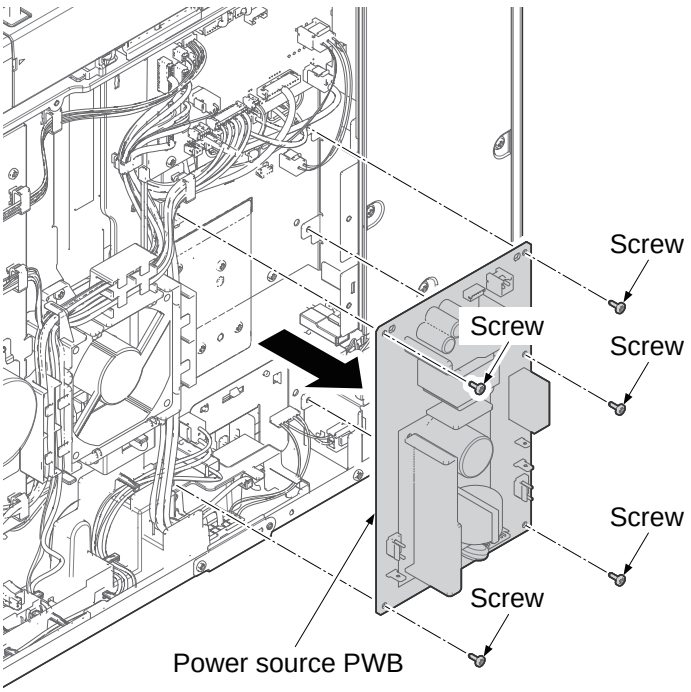

Figure 2-2-31

TONER
www.tonerplus.com.ua

2-2-5 Operation panel PWB (OPPWB)

(1) Connector position

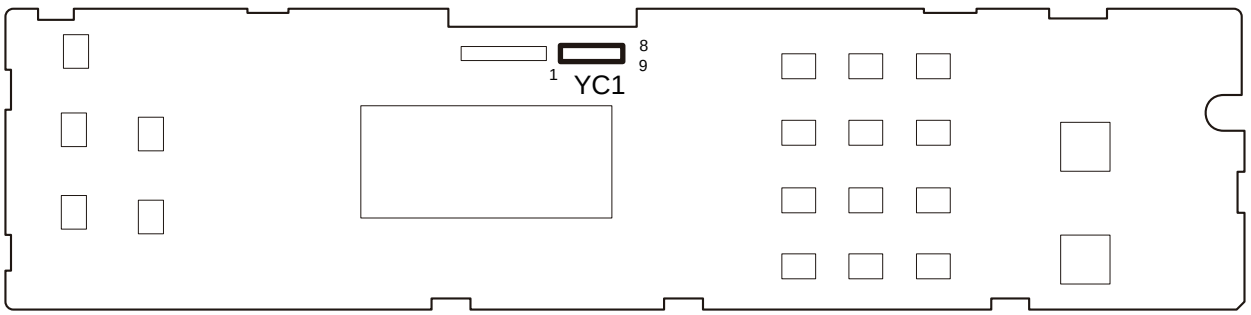

Figure 2-2-32

(2) PWB photograph

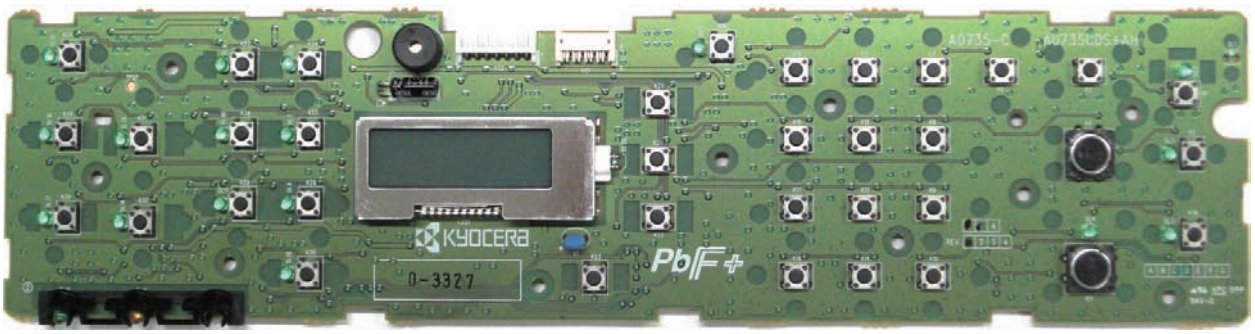

TONER
www.tonerplus.com.ua

Figure 2-2-33

(3) Connector lists

Connector	Pin	Signal	I/O	Voltage	Description
YC1	1	24V4	I	24 V DC	24 V DC power input from M/EPWB
Connected to main/engine PWB	2	LCDCON	I	0/3.3 V DC	LCD control signal
	3	PANRXD	O	0/3.3 V DC	Serial communication data signal
	4	PANTXD	I	0/3.3 V DC	Serial communication data signal
	5	POWER_KEY	O	0/3.3 V DC	Sleep key signal
	6	PRESETN	I	0/3.3 V DC	Panel reset signal
	7	GND	-	-	Ground
	8	3.3V2	I	3.3 V DC	3.3 V DC power input from M/EPWB

TONER
www.tonerplus.com.ua

(4) Detaching and refitting the PWB. (OPPWB)

Procedure

1. Raise the operation panel cover using a flat screw driver and then remove it by sliding.

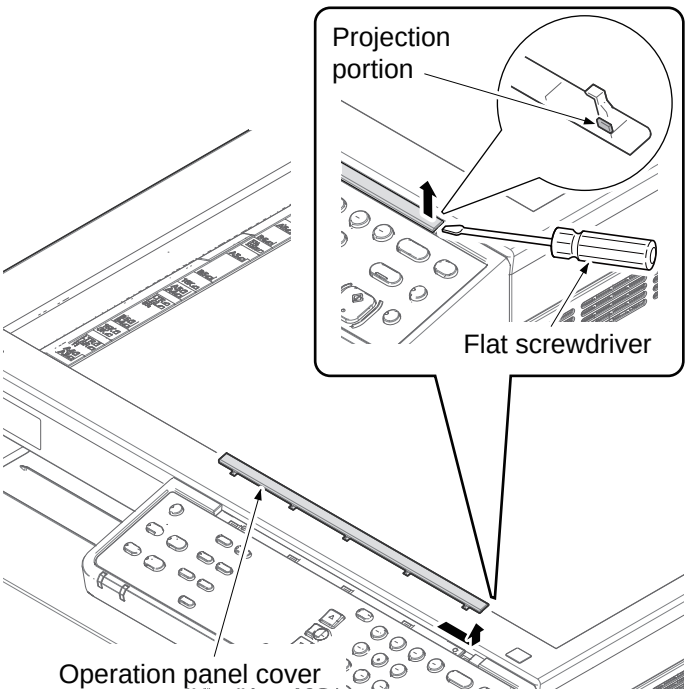

Figure 2-2-34

2. Remove the clear panel.
3. Remove the operation panel sheet.

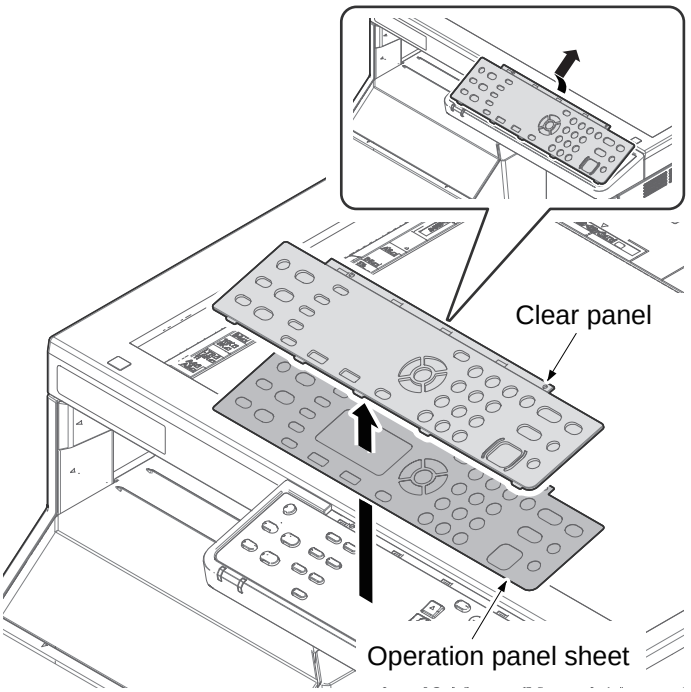

Figure 2-2-35

TONER
www.tonerplus.com.ua

4. Remove two screws.
5. Release four hooks and then remove the connector from the operation panel PWB.
6. Remove the operation panel assembly upward.

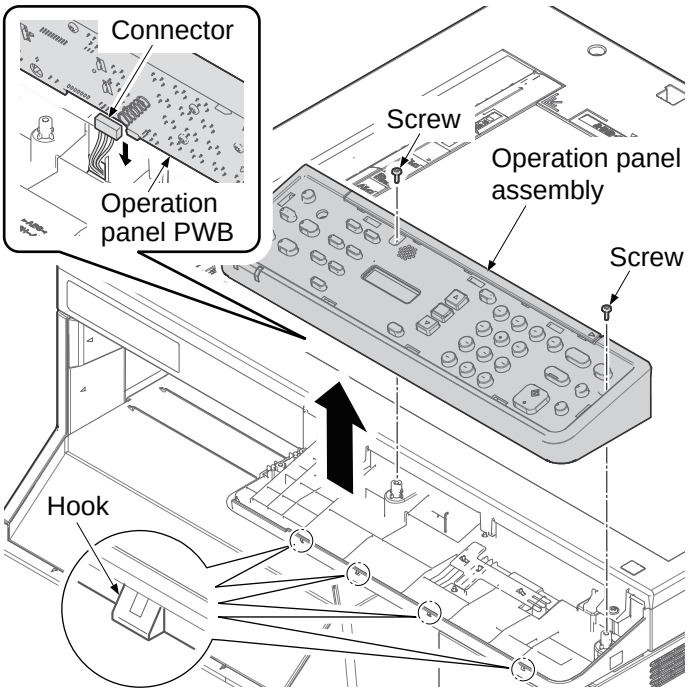

Figure 2-2-36

7. Remove ten screws.
8. Release six hooks and then remove the operation panel PWB.
9. Check or replace the operation panel PWB and refit all the removed parts.

*: Be careful not to lose a spring.

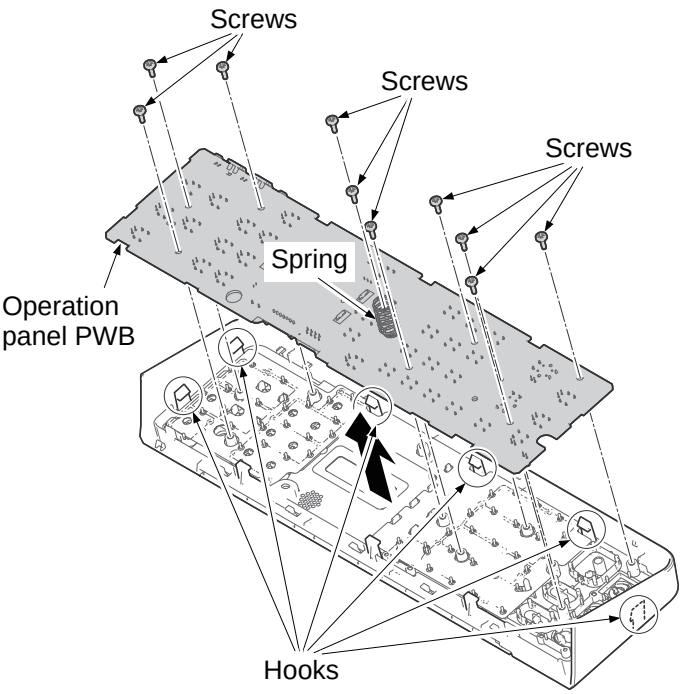

Figure 2-2-37

TONER
www.tonerplus.com.ua

2-2-6 DP main PWB (DPMPWB)

(1) Connector position

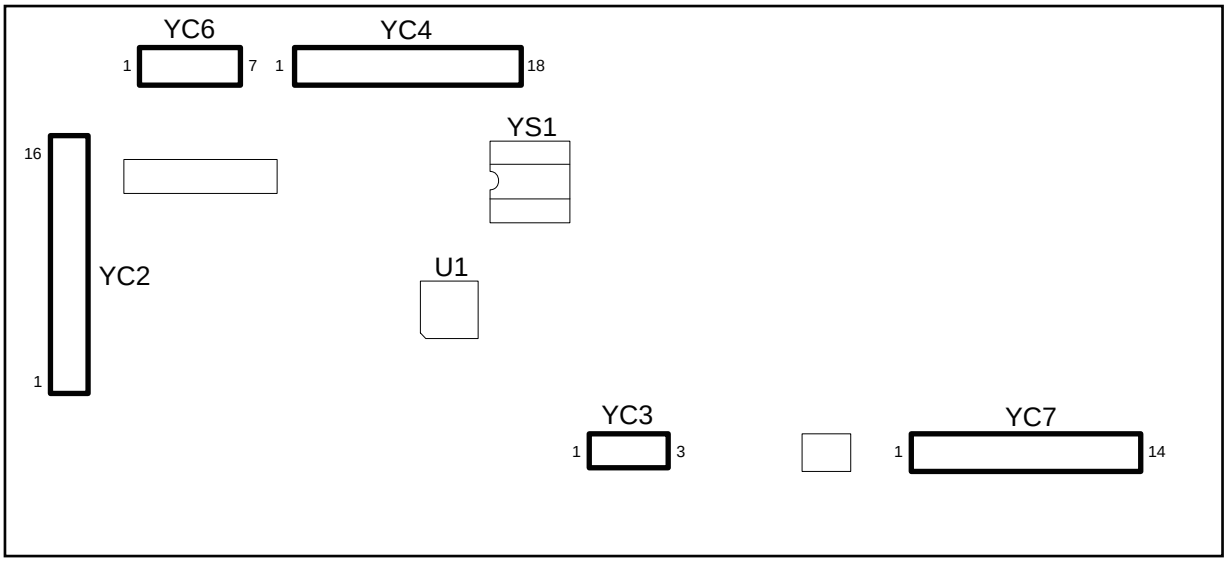

Figure 2-2-38

(2) PWB photograph

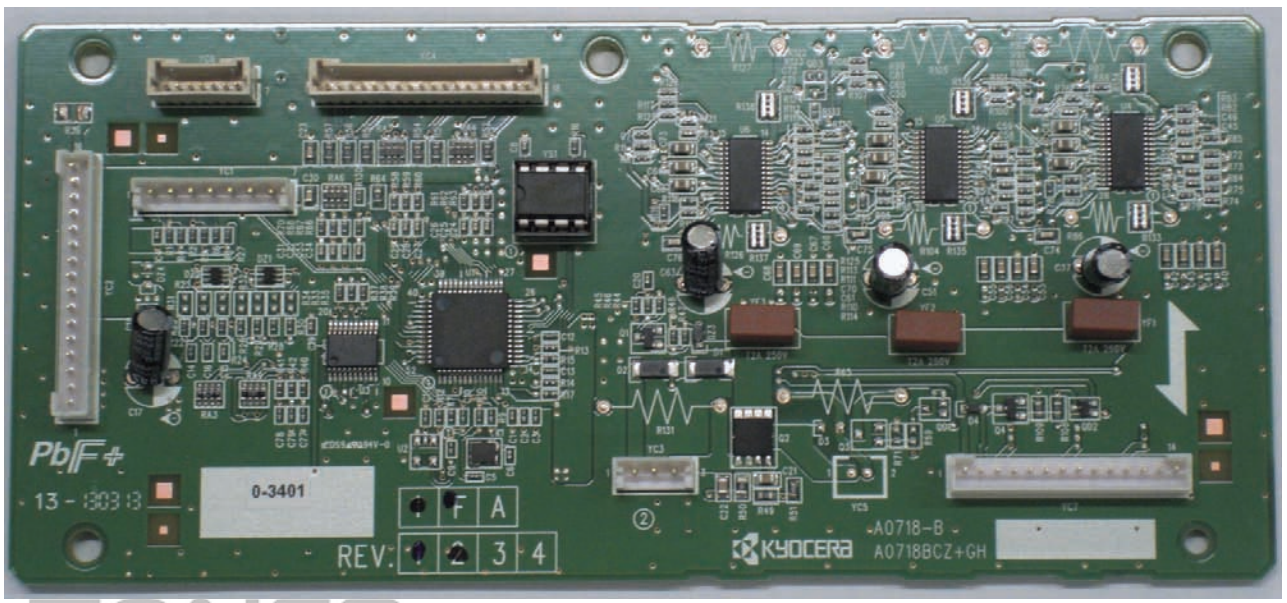

TONER
www.tonerplus.com.ua

Figure 2-2-39

(3) Connector lists

Connector	Pin	Signal	I/O	Voltage	Description
YC2	1	GND	-	-	Ground
Connected to main/engine PWB	2	GND	-	-	Ground
	3	GND	-	-	Ground
	4	GND	-	-	Ground
	5	24V4	I	24 V DC	24 V DC power input from M/EPWB
	6	24V4	I	24 V DC	24 V DC power input from M/EPWB
	7	3.3V4	I	3.3 V DC	3.3 V DC power input from M/EPWB
	8	3.3V4	I	3.3 V DC	3.3 V DC power input from M/EPWB
	9	DP_CLK	I	0/3.3 V DC(pulse)	DP clock signal
	10	DP_SO	I	0/3.3 V DC	Serial communication data signal
	11	DP_SEL	I	0/3.3 V DC	DP select signal
	12	DP_SI	O	0/3.3 V DC	Serial communication data signal
	13	DP_RDY	O	0/3.3 V DC	DP ready signal
	14	DP_TMG	O	0/3.3 V DC	DPTS: On/Off
	15	DP_OPEN	O	0/3.3 V DC	DPOCS: On/Off
	16	FG			
YC3	1	24V2	O	24 V DC	24 V DC power output to DPMPWB
Connected to right cover switch	2	NC	-	-	Not used
	3	24VIL_DP	I	24 V DC	24 V DC power input from DPRCSW
YC4	1	3.3V2	O	3.3 V DC	3.3 V DC power output to DPMPWB
Connected to DP original sensor, DP original feed sensor, DP registration sensor, DP open/close sensor, DP shiftback sensor and DP timing sensor	2	GND	-	-	Ground
	3	SET_SW		0/3.3 V DC	DPOS: On/Off
	4	3.3V2	O	3.3 V DC	3.3 V DC power output to DPMPWB
	5	GND	-	-	Ground
	6	FEED_SW		0/3.3 V DC	DPOFS: On/Off
	7	3.3V2	O	3.3 V DC	3.3 V DC power output to DPMPWB
	8	GND	-	-	Ground
	9	REGIST_SW		0/3.3 V DC	DPRS: On/Off
	10	3.3V2	O	3.3 V DC	3.3 V DC power output to DPMPWB
	11	GND	-	-	Ground
	12	DP_OPEN_SW		0/3.3 V DC	DPOCS: On/Off
	13	3.3V2	O	3.3 V DC	3.3 V DC power output to DPMPWB
	14	GND	-	-	Ground
	15	HP_SW		0/3.3 V DC	DPSBS: On/Off
	16	3.3V2	O	3.3 V DC	3.3 V DC power output to DPMPWB

TONER
www.tonerplus.com.ua

Connector	Pin	Signal	I/O	Voltage	Description
YC4	17	GND	-	-	Ground
Connected to DP original sensor, DP original feed sensor, DP registration sensor, DP open/close sensor, DP shiftback sensor and DP timing sensor	18	TIMING_SW		0/3.3 V DC	DPTS: On/Off
YC6	1	3.3V2	O	3.3 V DC	3.3 V DC power output to DPMPWB
Connected to DP original lengyh switch and DP original width switch	2	GND	-	-	Ground
	3	LS_SW		0/3.3 V DC	DPOLSW: On/Off
	4	WIDE3		0/3.3 V DC	DPOWSW: On/Off
	5	WIDE2		0/3.3 V DC	DPOWSW: On/Off
	6	GND	-	-	Ground
	7	WIDE1		0/3.3 V DC	DPOWSW: On/Off
YC7	1	CL_REM		0/24 V DC	DPRCL: On/Off
Connected to DP original feed motor, DP original conveying motor, DP shiftback motor and DP regist clutch	2	24VIL_DP	O	24 V DC	24 V DC power output to DPMPWB
	3	JNC_MOT_/B		0/24 V DC(pulse)	DPSBM drive control signal
	4	JNC_MOT_/A		0/24 V DC(pulse)	DPSBM drive control signal
	5	JNC_MOT_B		0/24 V DC(pulse)	DPSBM drive control signal
	6	JNC_MOT_A		0/24 V DC(pulse)	DPSBM drive control signal
	7	CONV_MOT_/B		0/24 V DC(pulse)	DPOCM drive control signal
	8	CONV_MOT_/A		0/24 V DC(pulse)	DPOCM drive control signal
	9	CONV_MOT_B		0/24 V DC(pulse)	DPOCM drive control signal
	10	CONV_MOT_A		0/24 V DC(pulse)	DPOCM drive control signal
	11	FEED_MOT_/B		0/24 V DC(pulse)	DPOFM drive control signal
	12	FEED_MOT_/A		0/24 V DC(pulse)	DPOFM drive control signal
	13	FEED_MOT_B		0/24 V DC(pulse)	DPOFM drive control signal
	14	FEED_MOT_A		0/24 V DC(pulse)	DPOFM drive control signal

TONER
www.tonerplus.com.ua

(4) Detaching and refitting the PWB. (DPMPWB)

Procedure

1. open the DP.
2. Release three hooks.

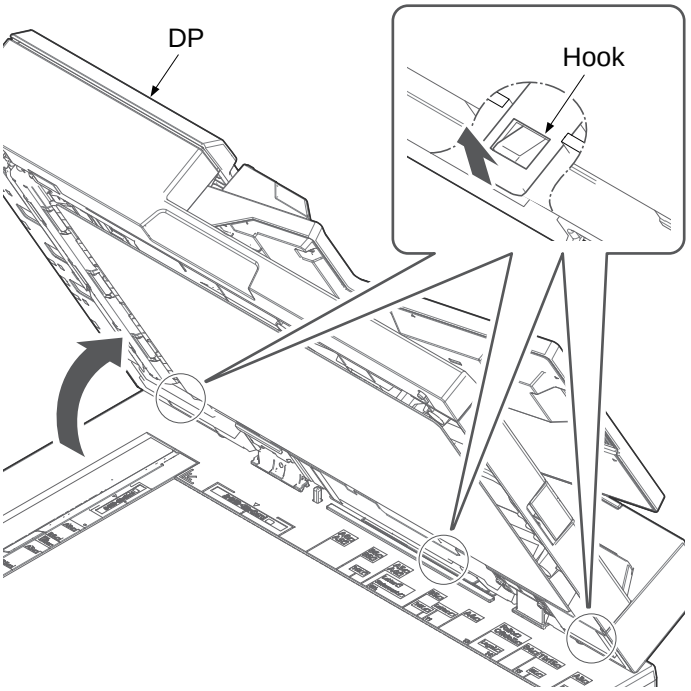

Figure 2-2-40

3. Release five hooks.
4. Renmove the DP rear cover.

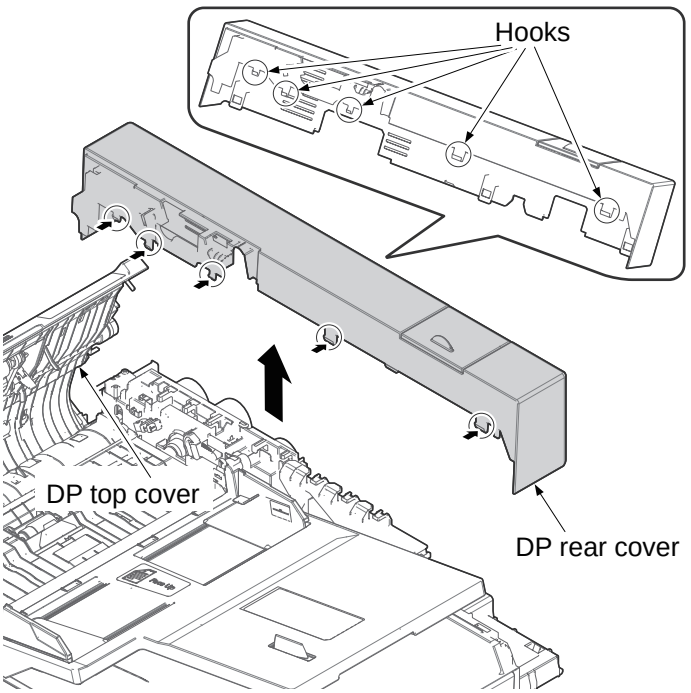

Figure 2-2-41

TONER
www.tonerplus.com.ua

5. Remove five connectors from the DP main PWB.

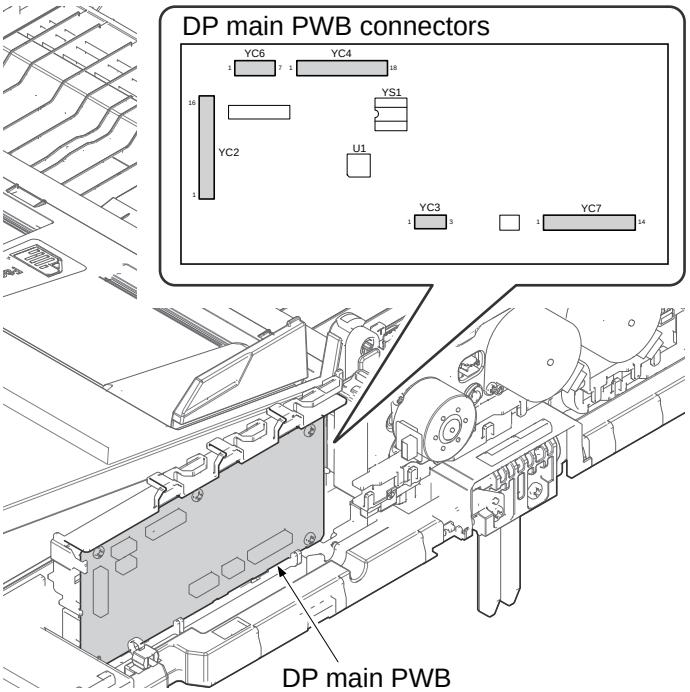

Figure 2-2-42

6. Remove four screws and then remove the DP main PWB.
7. Check or replace the DP main PWB and refit all the removed parts.

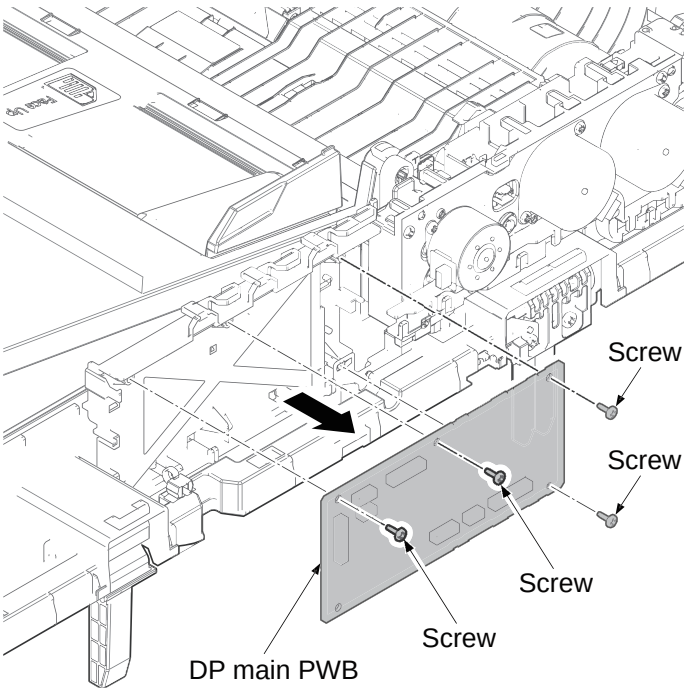

Figure 2-2-43

TONER
www.tonerplus.com.ua

(5) Remarks on DP main PWB replacement

NOTE: When replacing the PWB, remove the EEPROM (YS11) from DP main PWB and then reattach it to the new PWB.

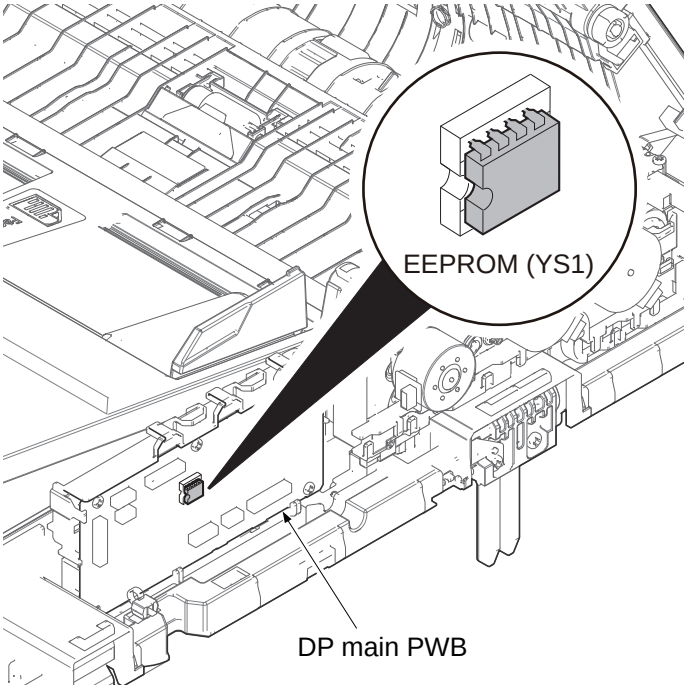

Figure 2-2-44

TONER
www.tonerplus.com.ua

2-2-7 PF main PWB (PFMPWB)

(1) Connector position

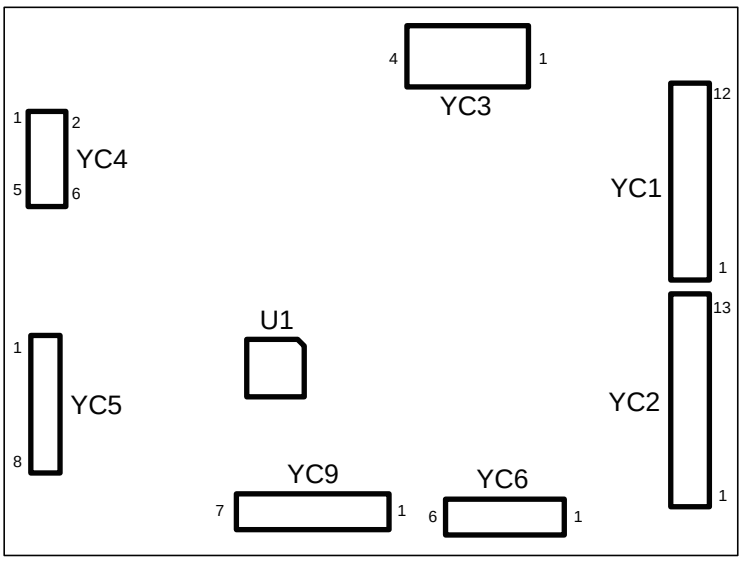

Figure 2-2-45

(2) PWB photograph

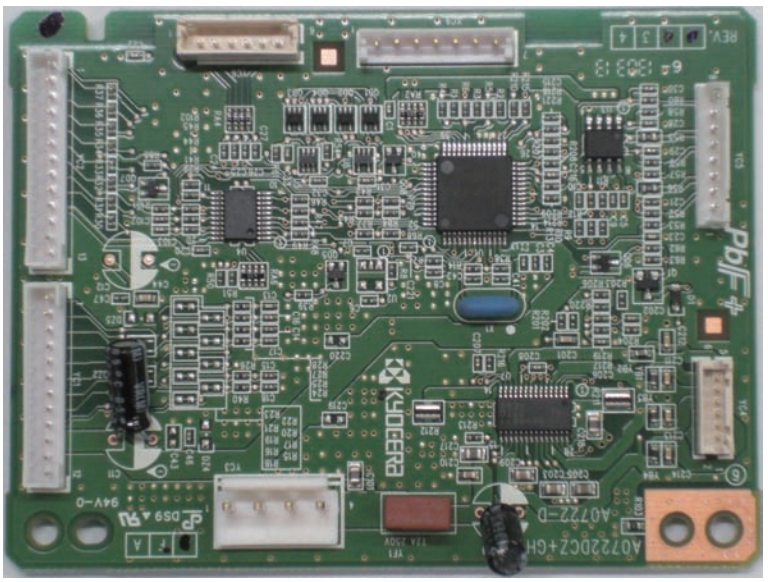

TONER
www.tonerplus.com.ua

Figure 2-2-46

(3) Connector lists

Connector	Pin	Signal	I/O	Voltage	Description
YC1	1	PFPAUSE	I	0/3.3 V DC	PF control signal
Connected to main/engine PWB or PF main PWB	2	PFSEL2	I	0/3.3 V DC	PF select signal
	3	PFSEL1	I	0/3.3 V DC	PF select signal
	4	PFSEL0	I	0/3.3 V DC	PF select signal
	5	PFRDY	O	0/3.3 V DC	PF ready signal
	6	PFSET	O	0/3.3 V DC	PF set signal
	7	PFSI	O	0/3.3 V DC	Serial communication data signal
	8	PFSO	I	0/3.3 V DC	Serial communication data signal
	9	PFCLK	I	0/3.3 V DC(pulse)	PF clock signal
	10	3.3V4	I	3.3 V DC	3.3 V DC input from M/EPWB
	11	+3.3V2	I	3.3 V DC	3.3 V DC input from M/EPWB
	12	SGND	-	-	Ground
YC2	1	PFPAUSE	O	0/3.3 V DC	PF control signal
Connected to PF main PWB	2	PFSEL2	O	0/3.3 V DC	PF select signal
	3	PFSEL1	O	0/3.3 V DC	PF select signal
	4	PFSEL0	O	0/3.3 V DC	PF select signal
	5	PFRDY	I	0/3.3 V DC	PF ready signal
	6	PFSET	I	0/3.3 V DC	PF set signal
	7	PFSI	O	0/3.3 V DC	Serial communication data signal
	8	PFSO	I	0/3.3 V DC	Serial communication data signal
	9	PFCLK	I	0/3.3 V DC(pulse)	PF clock signal
	10	3.3V4	O	3.3 V DC	3.3 V DC power output to PFMPWB
	11	+3.3V2	O	3.3 V DC	3.3 V DC power output to PFMPWB
	12	SGND	-	-	Ground
	13	NC	-	-	Not used
YC3	1	PGND	-	-	Ground
Connected to PF main PWB	2	PGND	-	-	Ground
	3	+24V4	O	24 V DC	24 V DC power input from M/EPWB or PFMPWB
	4	+24V4	O	24 V DC	24 V DC power output to PFMPWB
YC4	1	CLREM	O	0/24V DC	PFPFCL: On/Off
Connected to PF paper feed clutch and PF paper feed motor	2	+24V4	O	24 V DC	24 V DC power output to PFMPWB
	3	MOTB3	O	0/24 V DC(pulse)	PFPFM drive control signal
	4	MOTA3	O	0/24 V DC(pulse)	PFPFM drive control signal
	5	MOTB1	O	0/24 V DC(pulse)	PFPFM drive control signal
	6	MOTA1	O	0/24 V DC(pulse)	PFM drive control signal

TONER
www.tonerplus.com.ua

Connector	Pin	Signal	I/O	Voltage	Description
YC5	1	COVEROPEN	I	0/3.3 V DC	PFCSW: On/Off
Connected to PF cover switch, PF paper guage switch and PF paper sensor	2	SGND	-	-	Ground
	3	+3.3V4	O	3.3 V DC	3.3 V DC power output to PFMPWB
	4	SGND	-	-	Ground
	5	PAPEREMPTY	I	0/3.3 V DC	PFPGS: On/Off
	6	+3.3V4	O	3.3 V DC	3.3 V DC power output to PFMPWB
	7	SGND	-	-	Ground
	8	FEEDSENSOR	I	0/3.3 V DC	PFPS: On/Off
YC6	1	CN-4	I	0/3.3 V DC	PFPLSW: On/Off
Connected to PF paper length switch and PF paper width switch	2	CN-3	I	0/3.3 V DC	PFPLSW: On/Off
	3	+3.3V0D	O	3.3 V DC	3.3 V DC power output to PFMPWB
	4	CN-1	I	0/3.3 V DC	PFPLSW: On/Off
	5	SIZESW	I	0/3.3 V DC	PFPWSW: On/Off
	6	+3.3V0D	O	3.3 V DC	3.3 V DC power output to PFMPWB

TONER
www.tonerplus.com.ua

(4) Detaching and refitting the PWB. (PFMPWB)

Procedure

1. Remove two screws.
2. Remove the PF rear cover by pulling Forward and then upward.

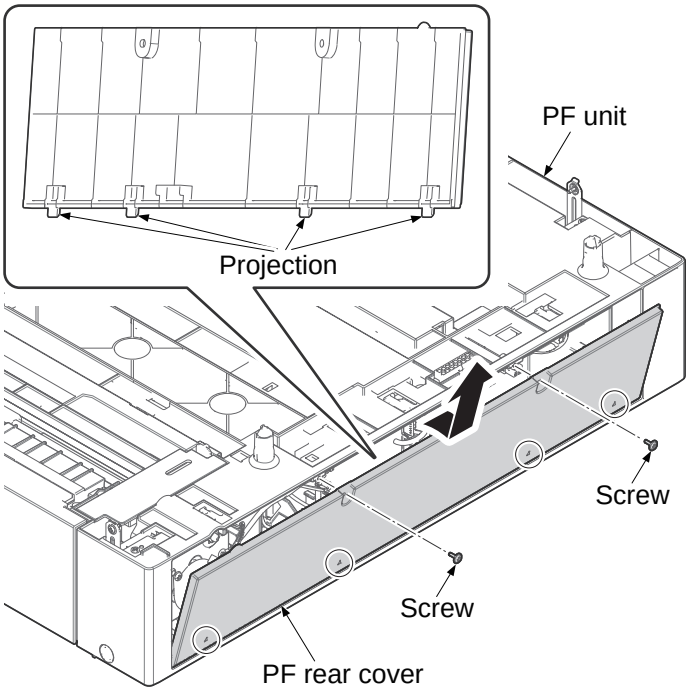

Figure 2-2-47

3. Remove all connector from PF main PWB.

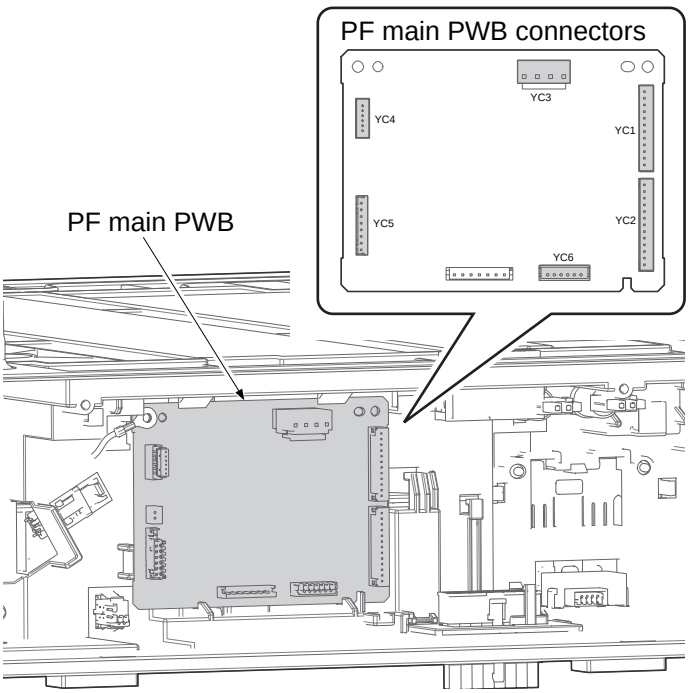

Figure 2-2-48

TONER
www.tonerplus.com.ua

4. Remove two screws and the grounding terminal.
5. Release two hooks B by pushing two hooks A to upside and remove the PF main PWB.
6. Check or replace the PF main PWB and refit all the removed parts.

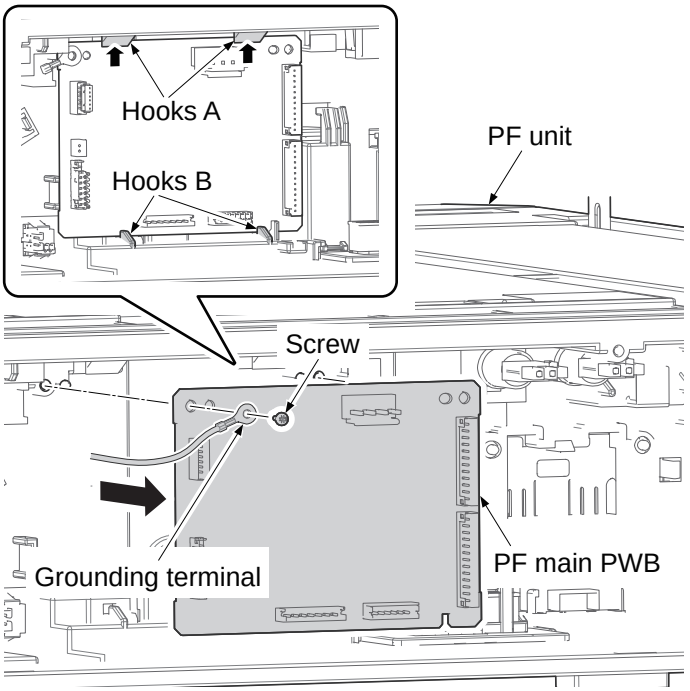

Figure 2-2-49

TONER
www.tonerplus.com.ua

This page is intentionally left blank.

TONER
www.tonerplus.com.ua

2-3-1 Appendixes

(1) List of maintenance parts

Maintenance part name		Part No.	Alternative part No.
Name used in service manual	Name used in parts list		
Paper feed pulley	PULLEY FEED ASSY (PARTS PRIMARY FEED ASSY SP)	302F906230 (302NG94020)	2F906230 (2NG94020)
Separation pulley	PARTS ROLLER RETARD ASSY SP (PARTS PRIMARY FEED ASSY SP)	302NG94110 (302NG94020)	2NG94110 (2NG94020)
Forwarding pulley	PARTS PULLEY PICKUP ASSY SP (PARTS PRIMARY FEED ASSY SP)	302NG94120 (302NG94020)	2NG94120 (2NG94020)
Contact glass	PARTS CONTACT GLASS ASSY SP	302NG94090	2NG94090
CIS	PARTS CIS ASSY SP	302NG93070	2NG93070
Original size sensor	SENSOR ORIGINAL	302NG44040	2NG44040
MP paper feed roller	PARTS ROLLER MPF SP	302NG94130	2NG94130
MP separation pad	HOLDER SEPARATION	302NG08220	2NG08220
Left ragistration roller	PARTS ROLLER REGIST LEFT SP	302NG94170	2NG94170
Right ragistration roller	PARTS ROLLER REGIST RIGHT SP	302NG94140	2NG94140
DU feed roller	-	-	-
DU feed pulley	PULLY DU	302K329020	2K329020
Eject roller	PARTS ROLLER EXIT SP (PARTS EXIT UNIT SP)	302NG94180 (302NG94060)	2NG94180 (2NG94060)
Eject pulley	- (PARTS EXIT UNIT SP)	- (302NG94060)	- (2NG94060)

TONER
www.tonerplus.com.ua

(2) Maintenance kits

Maintenance part name		Parts No.	Alternative part No.
Name used in service	Name used in parts list		
MK-4105/MAINTENANCE KIT (150,000 images)	MK-4105/MAINTENANCE KIT	1702NG0UN0	072NG0UN
Drum unit	DRUM UNIT	-	-

TONER
www.tonerplus.com.ua

(3) Repetitive defects gauge

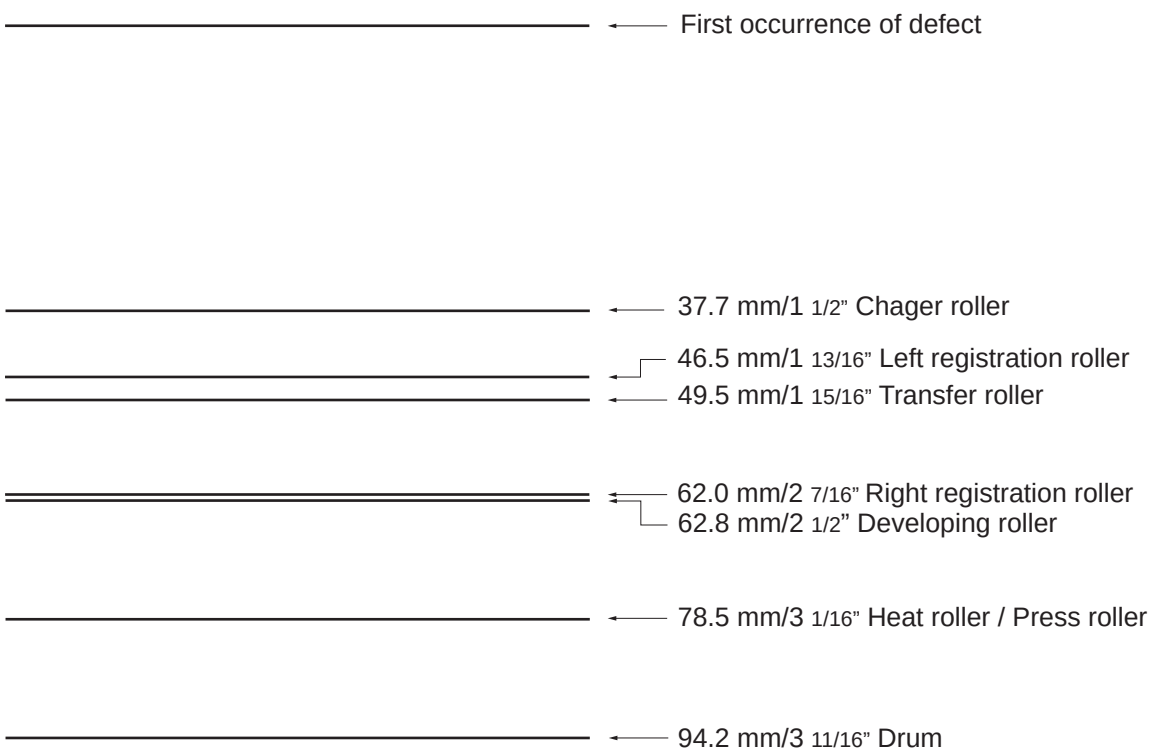

TONER
www.tonerplus.com.ua

This page is intentionally left blank.

TONER
www.tonerplus.com.ua

(4) Chart of image adjustment procedures

Adjusting order	Item	Image	Maintenance mode		Page	Setting procedure		Remarks
			Item No.	Mode		Method	Setting	
1	Adjusting the center line of the MP tray (printing adjustment) Adjusting the LSU print start timing	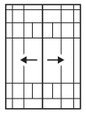	U034	LSU Out Left (Original:test pattern)	P.1-3-22	1. Press the start key. 2. Select [Lsu Out Left] to be adjusted. 3. Press the start key. 4. Press the system menu key. 5. Press the start key. (output a test pattern) 6. Press the system menu key. 7. Select [MPT] to be adjusted.	1. Change the setting value using the +/- keys or numeric keys. 2. Press the start key. The value is set. Completion: Press the stop key.	If a preset value is raised, a picture will move to the left. To make an adjustment for duplex copying, select DUPLEX.
2	Adjusting the center line of the cassettes (printing adjustment) Adjusting the LSU print start timing	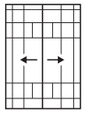	U034	LSU Out Left (Original:test pattern)	P.1-3-22	1. Press the start key. 2. Select [Lsu Out Left] to be adjusted. 3. Press the start key. 4. Press the system menu key. 5. Press the start key. (output a test pattern) 6. Press the system menu key. 7. Select the item to be adjusted. [Cassette1]?[Cassette7]	1. Change the setting value using the +/- keys or numeric keys. 2. Press the start key. The value is set. Completion: Press the stop key.	If a preset value is raised, a picture will move to the left. To make an adjustment for duplex copying, select DUPLEX.
3	Adjusting the leading edge registration of the MP tray (printing adjustment) secondary paper feed start timing	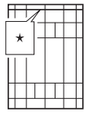	U034	LSU Out Top (Original:test pattern)	P.1-3-22	1. Press the start key. 2. Select [Lsu Out Top] to be adjusted. 3. Press the start key. 4. Press the system menu key. 5. Press the start key. (output a test pattern) 6. Press the system menu key. 7. Select [MPT(L)] or [MPT(S)] to be adjusted.	1. Change the setting value using the +/- keys or numeric keys. 2. Press the start key. The value is set. Completion: Press the stop key.	If a preset value is raised, a picture will move downward. To make an adjustment for duplex copying, select DUPLEX.
4	Adjusting the leading edge registration of the cassette (printing adjustment) secondary paper feed start timing	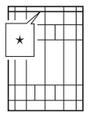	U034	LSU Out Top (Original:test pattern)	P.1-3-22	1. Press the start key. 2. Select [Lsu Out Top] to be adjusted. 3. Press the start key. 4. Press the system menu key. 5. Press the start key. (output a test pattern) 6. Press the system menu key. 7. Select [Cassette(L)] or [Caseette(S)] to be adjusted.	1. Change the setting value using the +/- keys or numeric keys. 2. Press the start key. The value is set. Completion: Press the stop key.	If a preset value is raised, a picture will move downward. To make an adjustment for duplex copying, select DUPLEX.
5	Adjusting the leading edge margin (printing adjustment) LSU illumination start timing	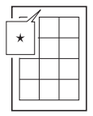	U402	Lead (Original:test pattern)	P.1-3-70	1. Press the start key. 2. Press the system menu key. 3. Press the start key. (output a test pattern) 4. Press the system menu key. 5. Select [Lead] to be adjusted.	1. Change the setting value using the +/- keys or numeric keys. 2. Press the start key. The value is set. Completion: Press the stop key.	A margin will become large if a preset value is raised.
6	Adjusting the trailing edge margin (printing adjustment) LSU illumination end timing	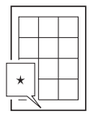	U402	Trail (Original:test pattern)	P.1-3-70	1. Press the start key. 2. Press the system menu key. 3. Press the start key. (output a test pattern) 4. Press the system menu key. 5. Select [Trail] to be adjusted.	1. Change the setting value using the +/- keys or numeric keys. 2. Press the start key. The value is set. Completion: Press the stop key.	A margin will become large if a preset value is raised.

TONER
www.tonerplus.com.ua

Adjusting order	Item	Image	Maintenance mode		Page	Setting procedure		Remarks
			Item No.	Mode		Method	Setting	
7	Adjusting the left and right margins (printing adjustment) LSU illumination start/end timing	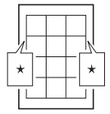	U402 (Original:test pattern)	A Margin C Margin	P.1-3-70	1. Press the start key. 2. Press the system menu key. 3. Press the start key. (output a test pattern) 4. Press the system menu key. 5. Select [A Margin] or [C Margin] to be adjusted.	1. Change the setting value using the +/- keys or numeric keys. 2. Press the start key. The value is set. Completion: Press the stop key.	A margin will become large if a preset value is raised.
8	Adjusting magnification of the scanner in the main scanning direction (scanning adjustment) Data processing	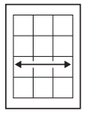	U065 U070 (Original:test pattern)	Y Zoom X Zoom (F)/(B)	P.1-3-29 P.1-3-34	1. Press the start key. 2. Press the system menu key. 3. Set aoriginal and then press the start key. (output a test copy) 4. Press the system menu key. 5. Select [Main Scan] to be adjusted.	1. Change the setting value using the +/- keys or numeric keys. 2. Press the start key. The value is set. Completion: Press the stop key.	U065: When using on the contact glass If a preset value is raised, a picture will spread. U070: When using document processor A picture will become long if a preset value is raised.
9	Adjusting magnification of the scanner in the auxiliary scanning direction (scanning adjustment) Original scanning speed	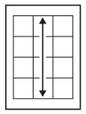	U065 (Original:test pattern)	X Zoom	P.1-3-29	1. Press the start key. 2. Press the system menu key. 3. Set aoriginal and then press the start key. (output a test copy) 4. Press the system menu key. 5. Select [Sub Scan] to be adjusted.	1. Change the setting value using the +/- keys or numeric keys. 2. Press the start key. The value is set. Completion: Press the stop key.	U065: When using on the contact glass If a preset value is raised, a picture will spread.
10	Adjusting the center line (scanning adjustment) Adjusting the original scan data (image adjustment)	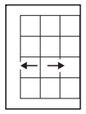	U067 U072 (Original:test pattern)	Front Front Back	P.1-3-32 P.1-3-37	1. Press the start key. 2. Press the system menu key. 3. Set aoriginal and then press the start key. (output a test copy) 4. Press the system menu key. 5. Select the item to be adjusted. U067: [Front] U072: [Front] or [Back]	1. Change the setting value using the +/- keys or numeric keys. 2. Press the start key. The value is set. Completion: Press the stop key.	U067: When using on the contact glass If a preset value is raised, a picture will move to the left. U072: When using document processor Back adjustment selects [Back] at the time of duplex mode. If a preset value is raised, a picture will move to the right.
11	Adjusting the leading edge registration (scanning adjustment) Original scan start timing	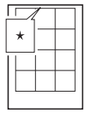	U066 U071 (Original:test pattern)	Front Front Head Back Head	P.1-3-31 P.1-3-35	1. Press the start key. 2. Press the system menu key. 3. Set aoriginal and then press the start key. (output a test copy) 4. Press the system menu key. 5. Select the item to be adjusted. U066: [Front] U071: [Front Head] or [Back Head]	1. Change the setting value using the +/- keys or numeric keys. 2. Press the start key. The value is set. Completion: Press the stop key.	U066: When using on the contact glass If a preset value is raised, a picture will move forward. U071: When using document processor Back adjustment selects [Back Head] at the time of duplex mode.If a preset value is raised, a picture will move forward.
12	Adjusting the leading edge margin (scanning adjustment) Adjusting the original scan data (image adjustment)	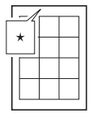	U403 U404 (Original:test pattern)	B Margin B Margin	P.1-3-71 P.1-3-72	1. Press the start key. 2. Press the system menu key. 3. Set aoriginal and then press the start key. (output a test copy) 4. Press the system menu key. 5. Select [B Margin] to be adjusted.	1. Change the setting value using the +/- keys or numeric keys. 2. Press the start key. The value is set. Completion: Press the stop key.	U403: When using on the contact glass A margin will become large if a preset value is raised. U404: When using document processor A margin will become large if a preset value is raised.

TONER+
www.tonerplus.com.ua

Adjusting order	Item	Image	Maintenance mode		Page	Setting procedure		Remarks
			Item No.	Mode		Method	Setting	
13	Adjusting the trailing edge margin (scanning adjustment) Adjusting the original scan data (image adjustment)	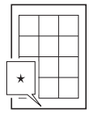	U403 U404 (Original:test pattern)	D Margin D Margin	P.1-3-71 P.1-3-72	1. Press the start key. 2. Press the system menu key. 3. Set aoriginal and then press the start key. (output a test copy) 4. Press the system menu key. 5. Select [D Margin] to be adjusted.	1. Change the setting value using the +/- keys or numeric keys. 2. Press the start key. The value is set. Completion: Press the stop key.	U403: When using on the contact glass A margin will become large if a preset value is raised. U404: When using document processor A margin will become large if a preset value is raised.
14	Adjusting the left and right margins (scanning adjustment) Adjusting the original scan data (image adjustment)	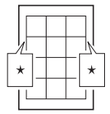	U403 U404 (Original:test pattern)	A Margin C Margin A Margin C Margin	P.1-3-71 P.1-3-72	1. Press the start key. 2. Press the system menu key. 3. Set aoriginal and then press the start key. (output a test copy) 4. Press the system menu key. 5. Select [A Margin] or [C Margin] to be adjusted.	1. Change the setting value using the +/- keys or numeric keys. 2. Press the start key. The value is set. Completion: Press the stop key.	U403: When using on the contact glass A margin will become large if a preset value is raised. U404: When using document processor A margin will become large if a preset value is raised.

When maintenance item U411 (Automatic adjustment in the scanner) is run using the specified original (P/N 7505000005) the following adjustments are automatically made:
Adjusting the scanner magnification (U065)
Adjusting the scanner leading edge registration (U066)
Adjusting the scanner center line (U067)

When maintenance item U411 (Automatic adjustment in the DP) is run using the specified original (P/N 7505000005) the following adjustments are automatically made:

* : When running this test chart, you first must clean the feed rollers with alcohol and ensure the DP width guides are correctly positioned against the original.

Adjusting the DP magnification (U070)
Adjusting the DP leading edge registration (U071)
Adjusting the DP center line (U072)

mage quality

Item	Specifications
100% magnification	Machine: ±0.8% Using DP: ±1.5%
Enlargement/reduction	Machine: ±1.0% Using DP: ±1.5%
Lateral squareness	Machine: ±1.5 mm/375 mm Using DP: ±3.0 mm/375 mm
Leading edge registration	Cassette: ±2.5 mm MP tray: ±2.5 mm Duplex: ±2.5 mm
Skewed paper feed (left-right difference)	Cassette: 1.5 mm or less MP tray: 1.5 mm or less Duplex: 2.0 mm or less
Lateral image shifting	Cassette: ±2.0 mm MP tray: ±2.0 mm Duplex: ±3.0 mm

TONER
www.tonerplus.com.ua

(5) Wiring diagram

No.1

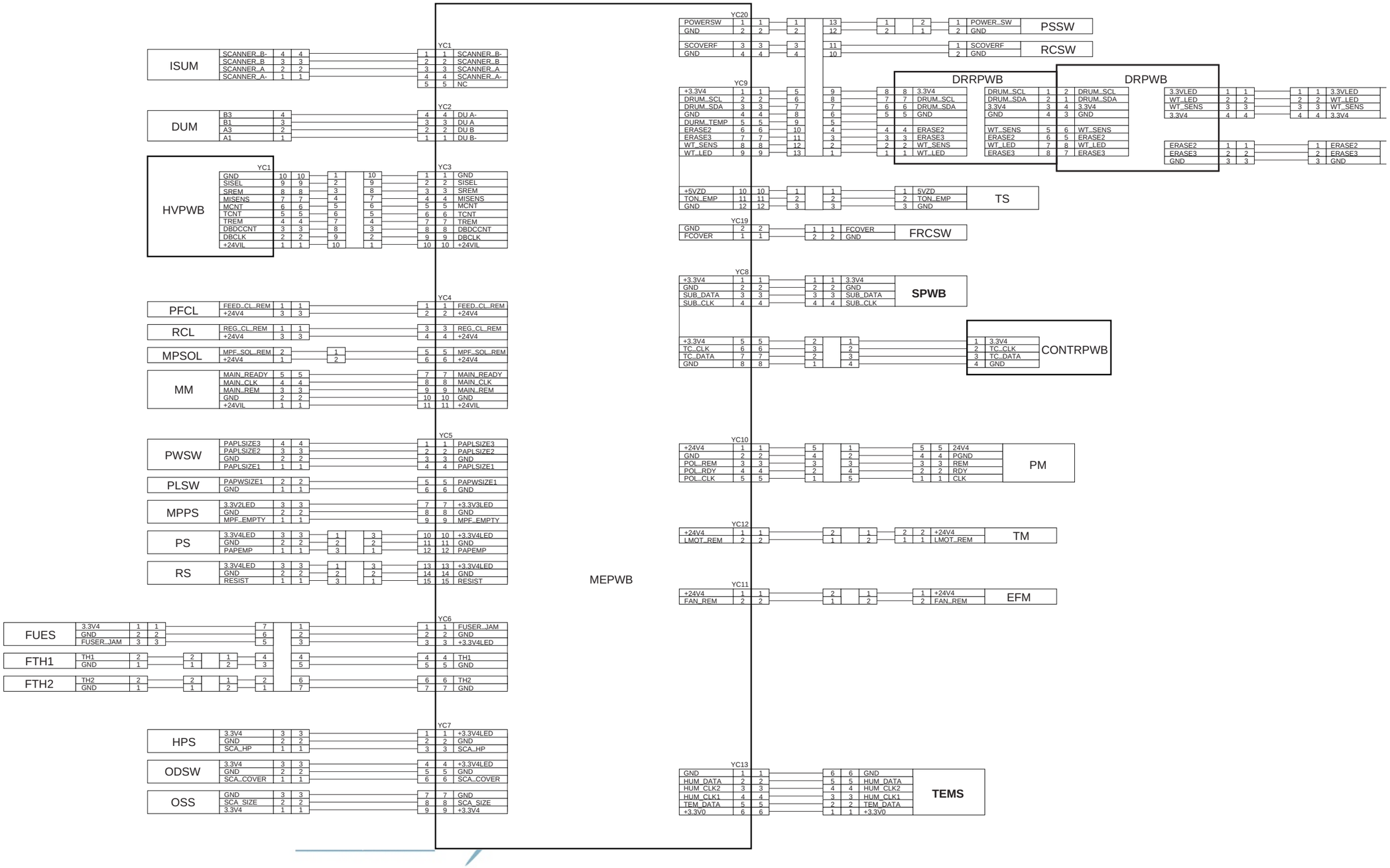

No.2

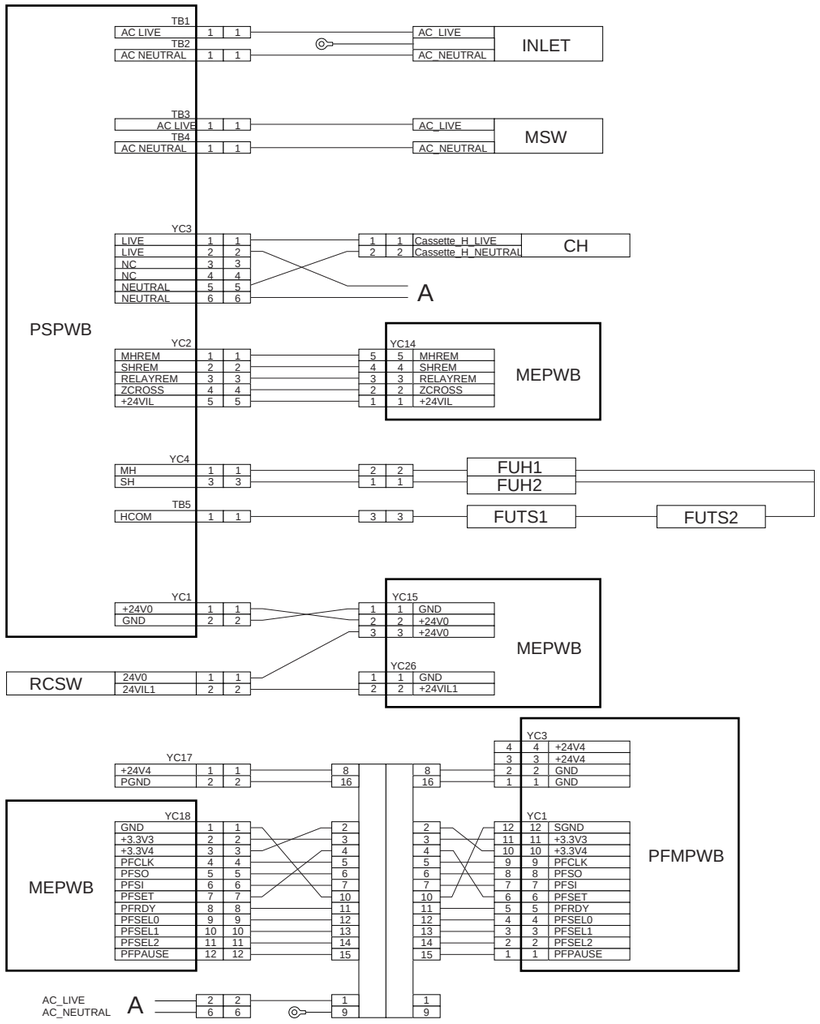

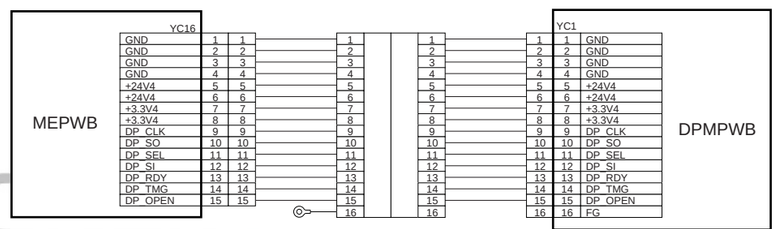

www.tonerplus.com.ua

No.3

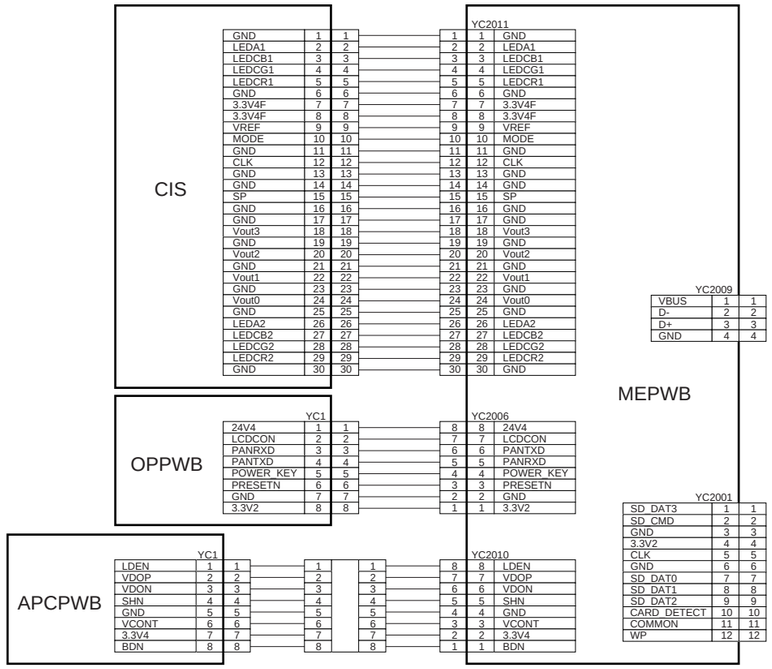

TONER+
www.tonerplus.com.ua

No.4(DP)

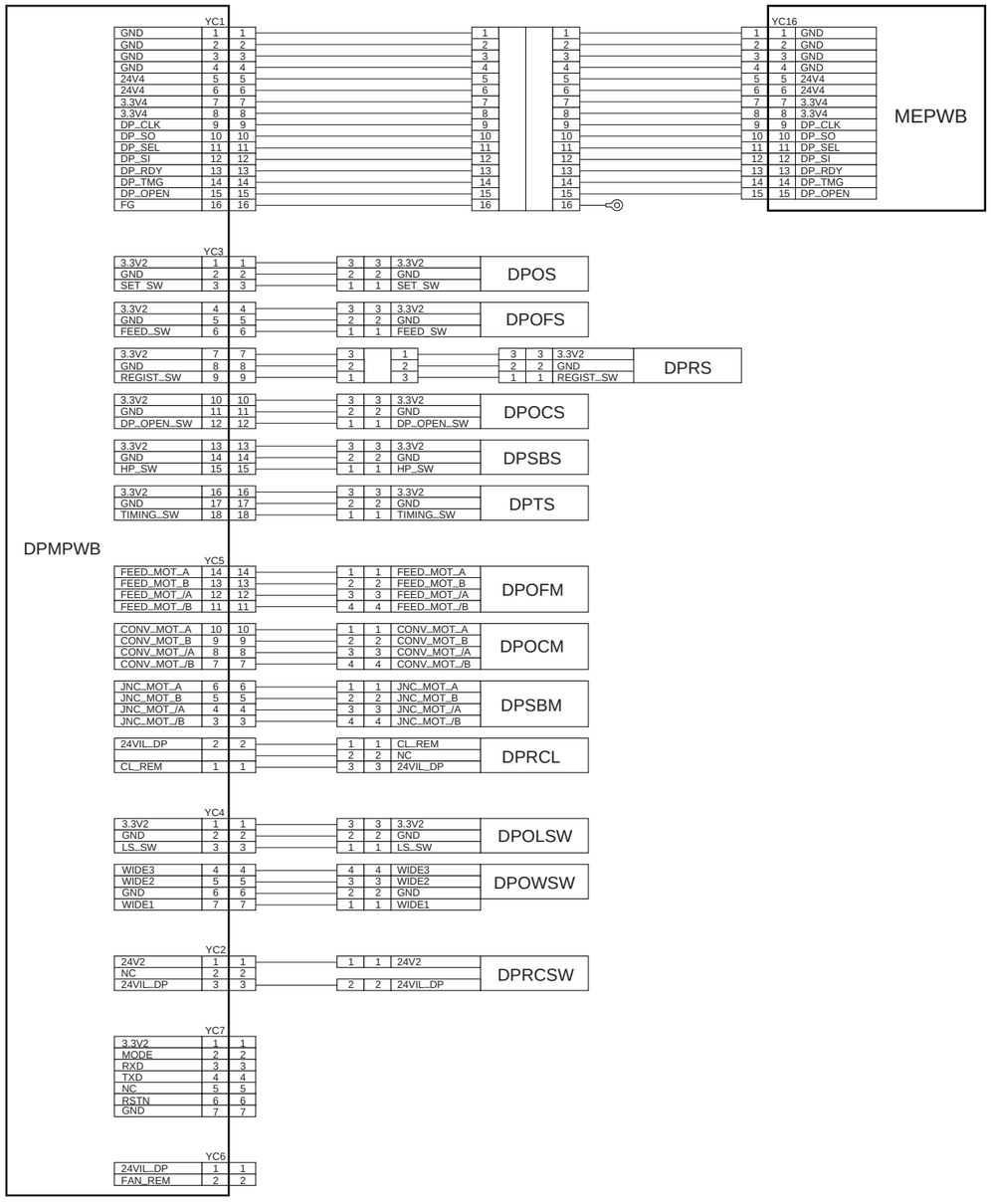

TONER
www.tonerplus.com.ua

No.5(PF)

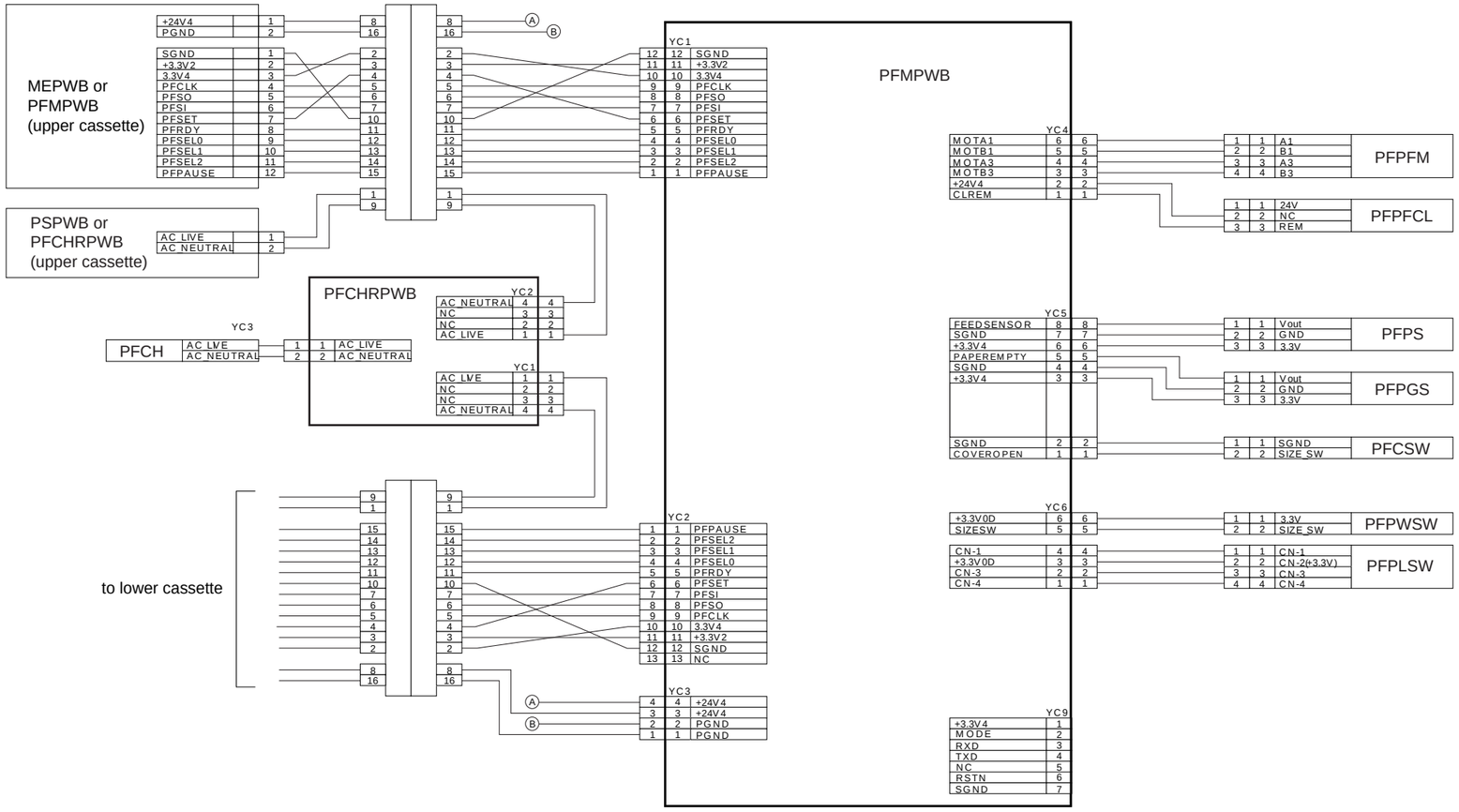

TONER
www.tonerplus.com.ua

DP-480 (Document processor)

Installation Guide

TONER
www.tonerplus.com.ua

INSTALLATION GUIDE

GUIDE D’INSTALLATION

GUÍA DE INSTALACION

INSTALLATIONSANLEITUNG

GUIDA ALL’INSTALLAZIONE

安装手册

설치안내서

設置手順書

DP-480

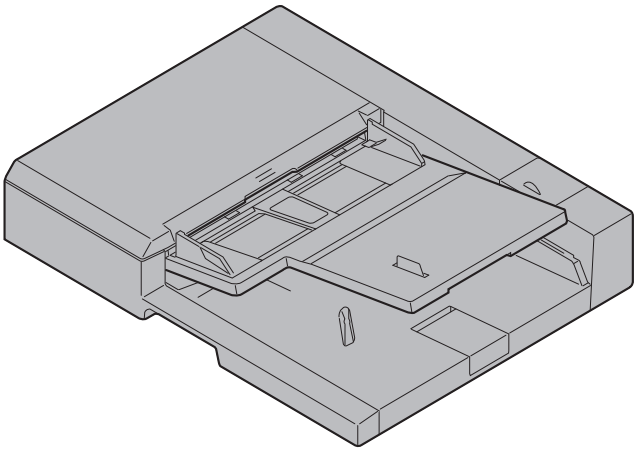

TONER
www.tonerplus.com.ua

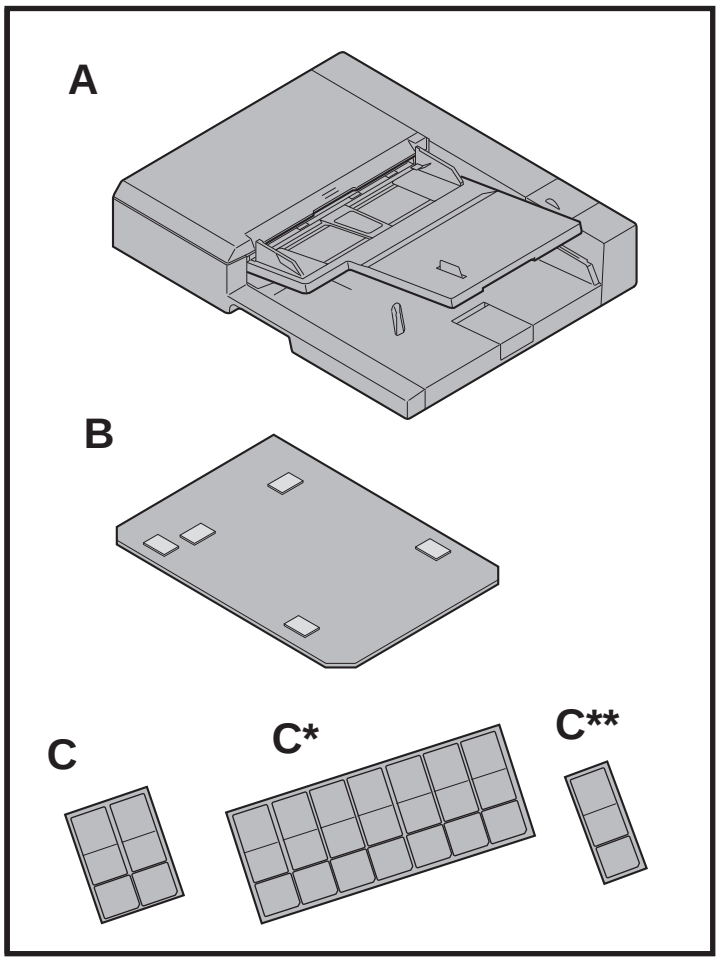

EN C:for inch specification
C*:for metric specification
C**: for 110 V models only

FR C : pour des spécifications anglo-saxonnes
C* : pour des spécifications métriques

ES C: para especificaciones en el sistema de pulgadas
C*: para especificaciones en el sistema métrico

DE C: für Angaben in Zoll
C*: für metrische Angaben

IT C: per specifiche in pollici
C*: per specifiche in unità del sistema metrico

CN （C）,（C*）,（C**）并非附属品。

KR (C),(C*),(C**)는 동봉되어 있지 않습니다.

JP （C）,（C*),(C**) は、同梱されていない。

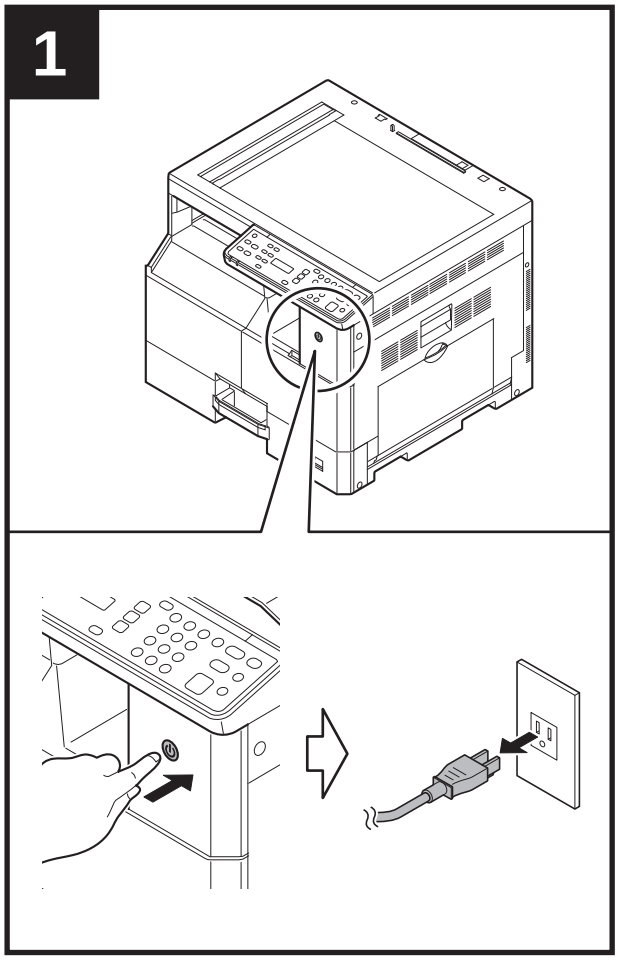

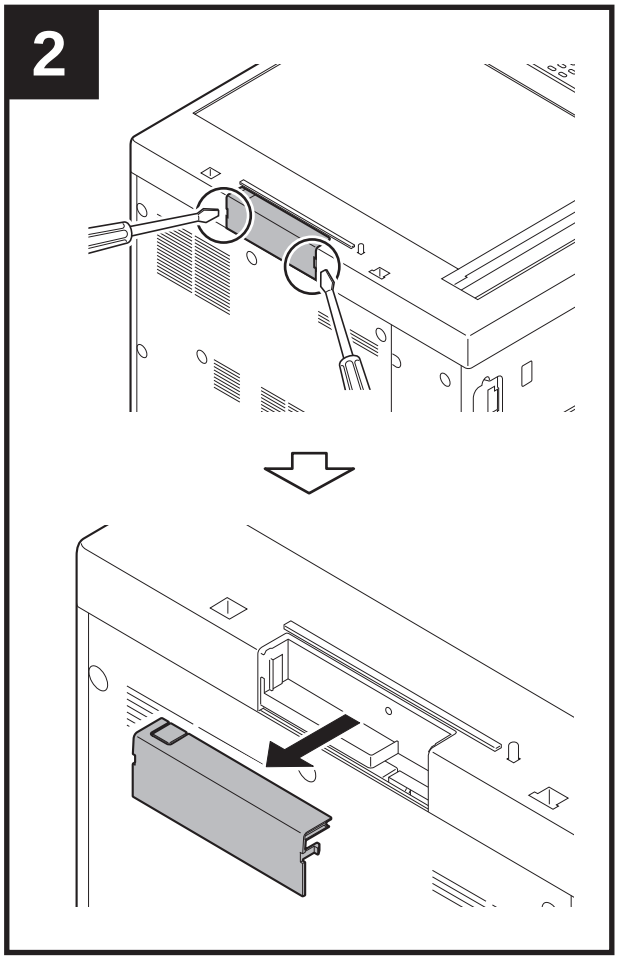

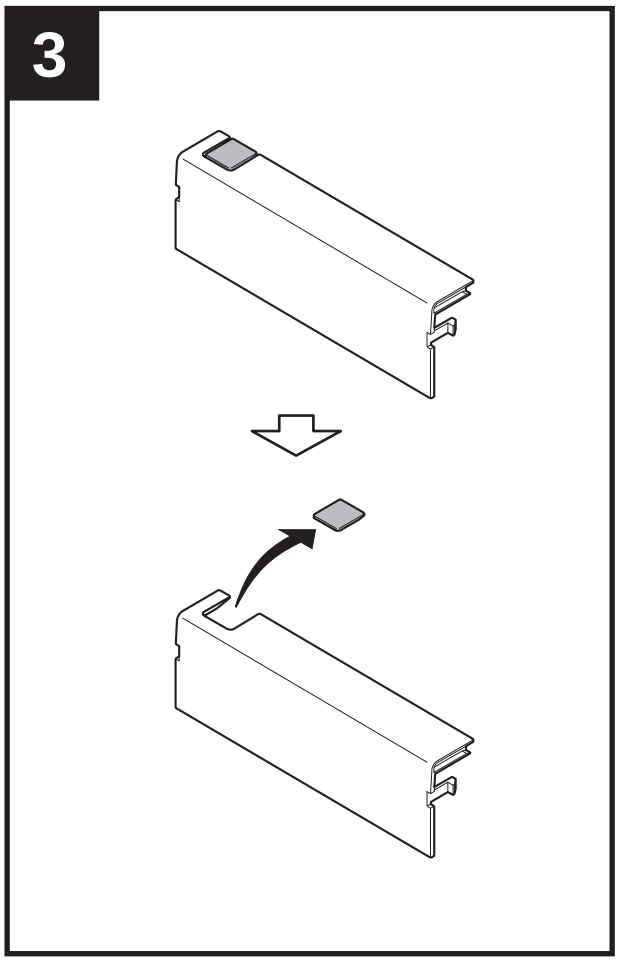
3

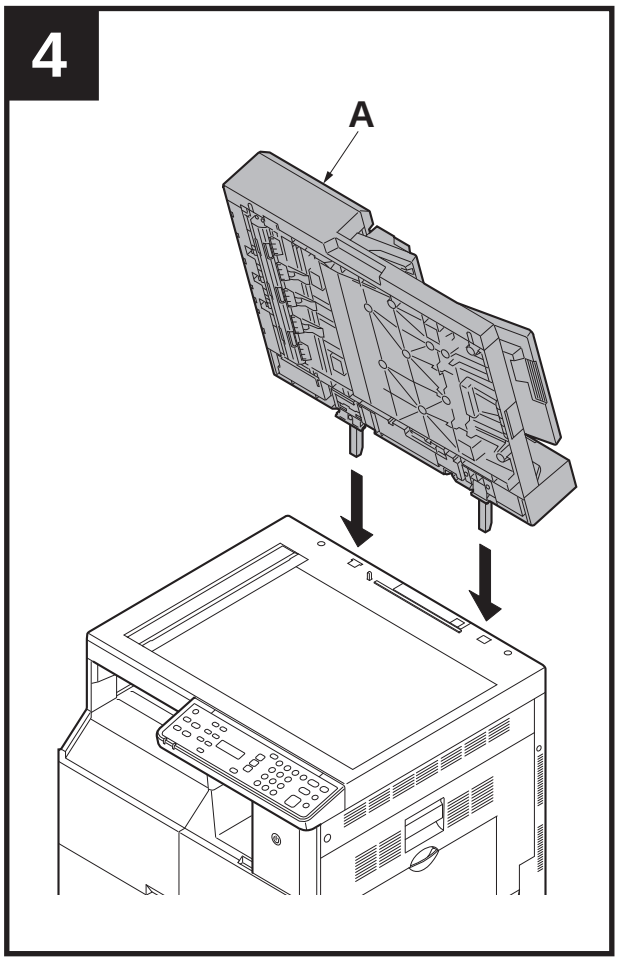
4
A

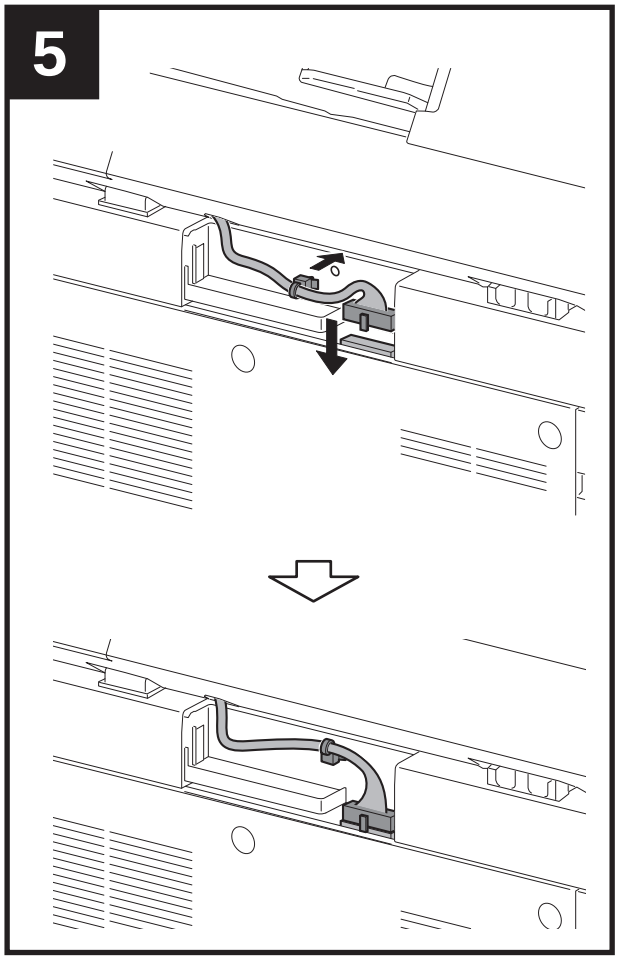
5

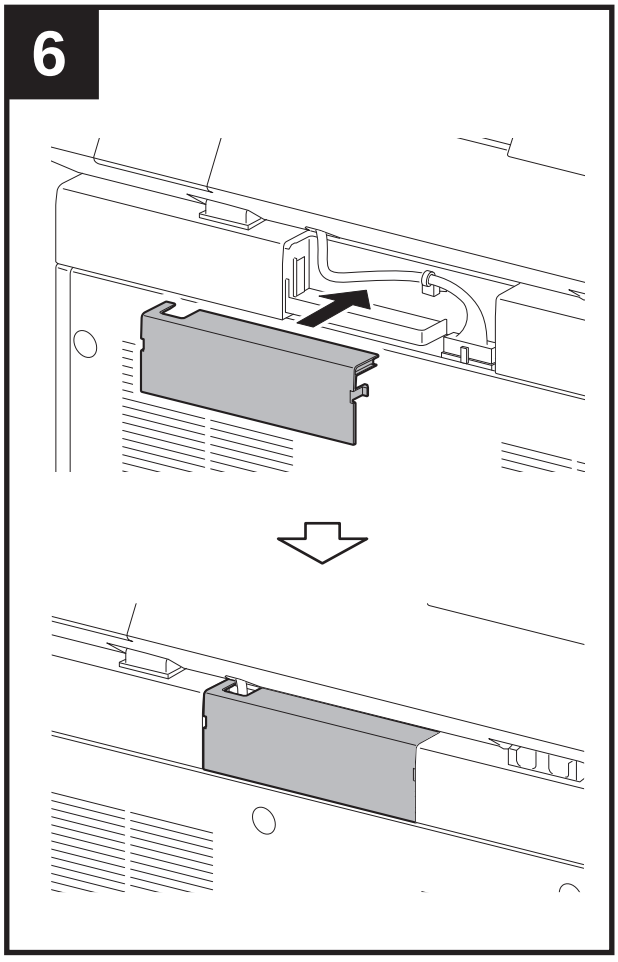
6

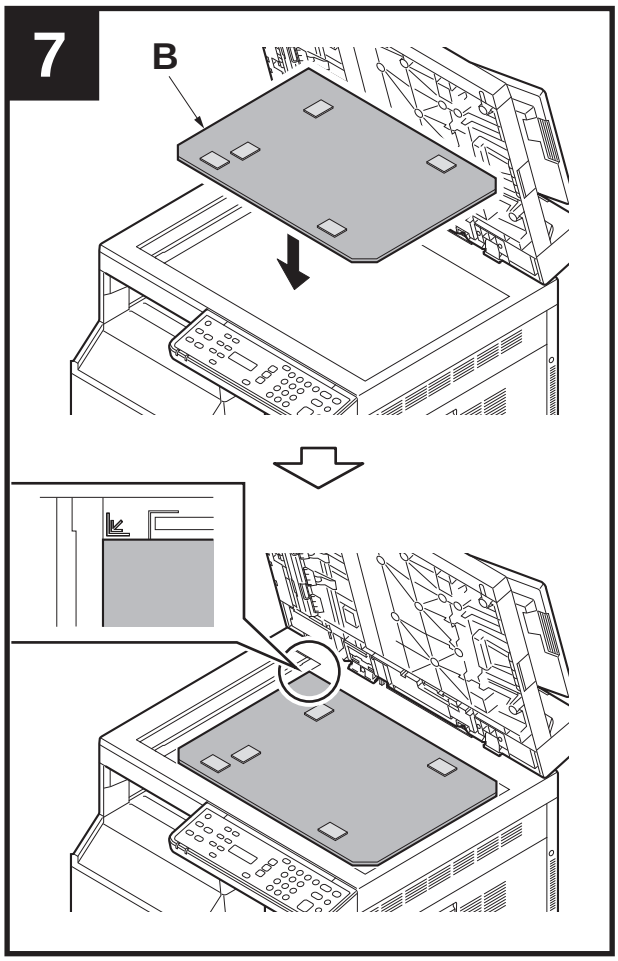
7
B

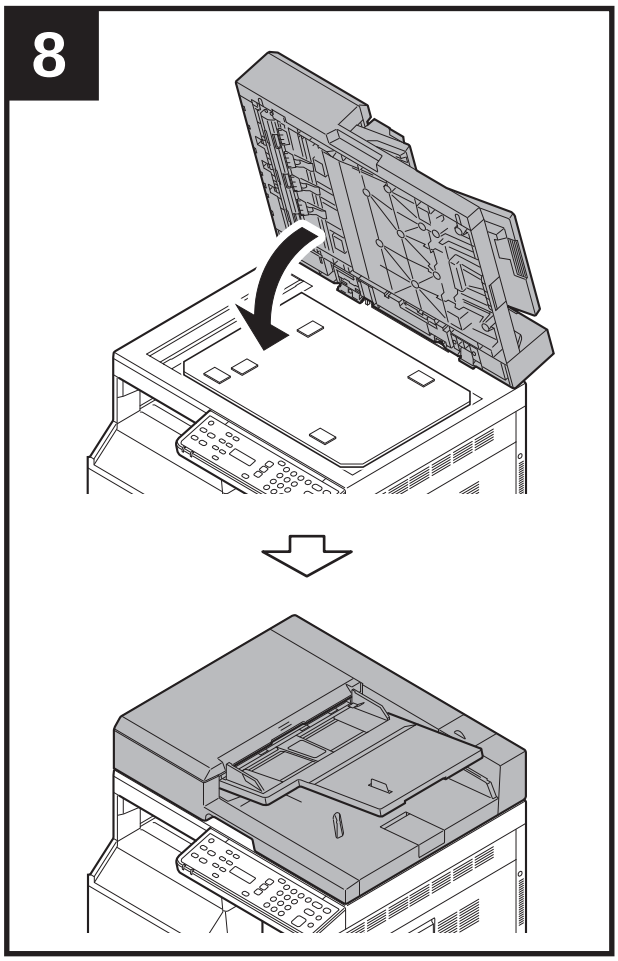
8

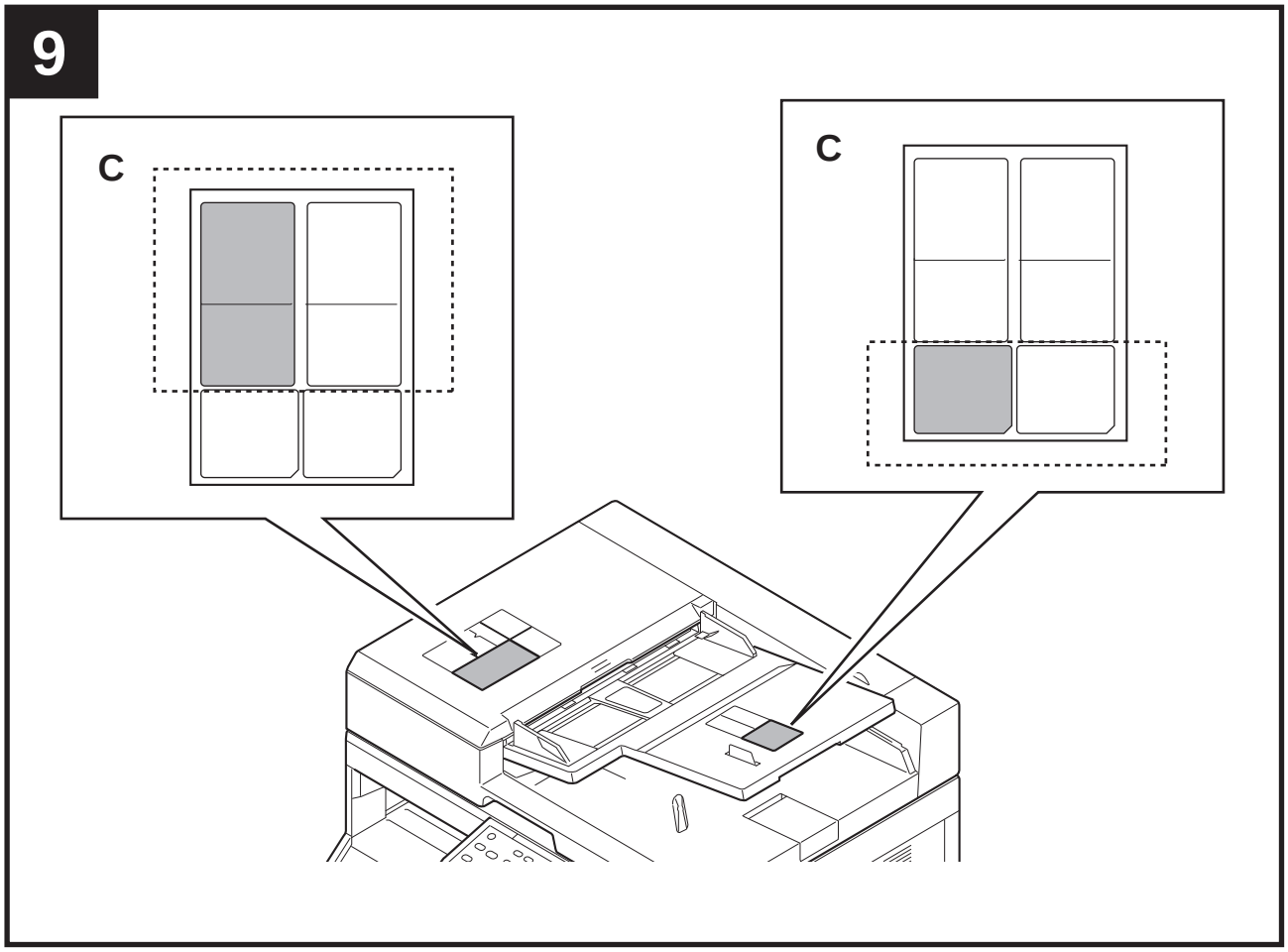
9
C
C

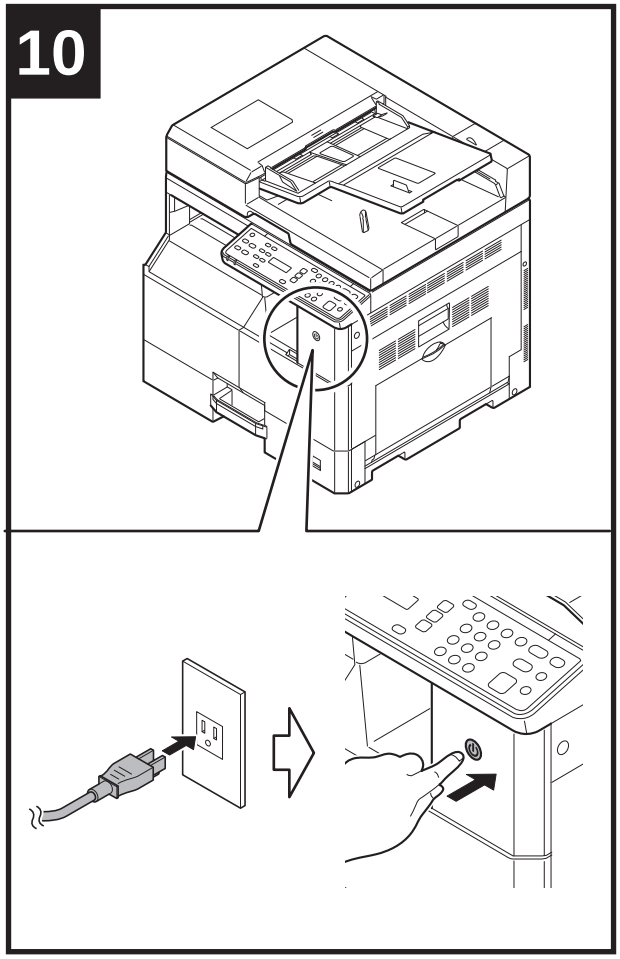
10

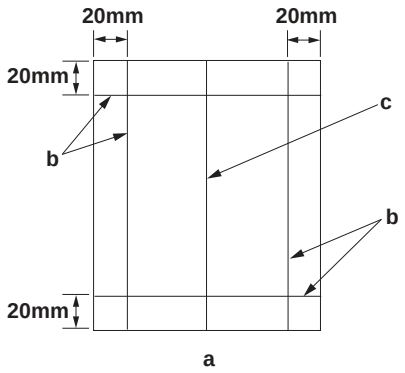

[Operation check]

1. To check the machine operation, prepare original (a) where 4 lines (b) are drawn 20 mm from the edges of the A3 sheet and 1 line (c) is drawn at its center.
2. Connect the power plug of the MFP into the wall outlet and turn the main power switch on.
3. Set the original (a) on the DP and perform a test copy to check the operation and the copy example.
4. Compare original (a) with the copy example. If the gap exceeds the reference value, perform the following adjustments according to the type of the gap.
   Check images of the DP after checking and adjusting images of the MFP. For details, see the service manual.

[Vérification du fonctionnement]

1. Pour vérifier le bon fonctionnement de l'appareil, préparer un original (a) sur lequel sont tracées 4 lignes (b) à 20 mm des bords de la feuille A3 et 1 ligne (c) en son axe.
2. Brancher la fiche d'alimentation du MFP sur la prise murale et mettre l'appareil sous tension.
3. Placer l'original (a) sur le DP et effectuer une copie de test pour vérifier le fonctionnement et l'exemple de copie.
4. Comparer l'original (a) avec l'exemple de copie. Si l'écart excède la valeur de référence, effectuer les réglages suivants en fonction du type d'écart.
   Vérifier les images du DP après avoir contrôlé et réglé les images du MFP. Pour plus de détails, se reporter au manuel d'entretien.

[Verifique el funcionamiento]

1. Para comprobar el funcionamiento del aparato, prepare un original (a) que contenga 4 líneas (b) dibujadas a 20 mm de los bordes de la hoja A3 y 1 línea (c) dibujada en el centro.
2. Conecte el enchufe eléctrico del MFP en el tomacorriente de la pared y encienda el interruptor principal.
3. Coloque el original (a) en el DP y haga una copia de prueba para verificar el funcionamiento y el ejemplo de copia.
4. Compare el original (a) con el ejemplo de copia. Si la separación supera el valor de referencia, realice los siguientes ajustes según el tipo de separación.
   Compruebe las imágenes del DP después de comprobar y ajustar las imágenes del MFP. Para más detalles, lea el manual de servicio.

[Funktionsprüfung]

1. Zum Prüfen der Gerätefunktion das Original (a) vorbereiten, auf das 4 Linien (b) 20 mm von den Kanten des A3-Blattes und 1 Linie (c) in der Mitte gezeichnet sind.
2. Den Netzstecker am MFP in die Steckdose stecken und den Strom einschalten.
3. Das Original (a) auf den DP legen und eine Testkopie erstellen, um die Funktion und das Kopierbeispiel zu prüfen.
4. Das Original (a) mit dem Kopierbeispiel vergleichen. Wenn der Abstand größer als der Bezugswert ist, die folgenden Einstellungen gemäß dem Abstandstyp durchführen.
   Die Bilder des DP nach dem Prüfen und Einstellen der Bilder des MFP prüfen. Weitere Einzelheiten siehe Wartungsanleitung.

[Verifica del funzionamento]

1. Per verificare il funzionamento della macchina, preparare l'originale (a) tirando 4 linee (b) a 20 mm dai bordi del foglio A3 e una linea (c) al centro.
2. Inserire la spina dell'alimentazione dell'MFP nella presa a muro, quindi posizionare l'interruttore principale su On.
3. Posizionare l'originale(a) sul DP ed eseguire una copia di prova per verificare il funzionamento e l'esempio di copia.
4. Confrontare l'originale (a) con l'esempio di copia. Se lo scostamento supera il valore di riferimento, eseguire le seguenti regolazioni in funzione del tipo di scostamento.
   Controllare le immagini del DP dopo avere effettuato i controlli e le regolazioni delle immagini sull'MFP. Per ulteriori dettagli leggere il manuale d'istruzioni.

[动作确认]

1. 若要检查机器动作，准备一张 A3 原稿（a），距纸张边缘 20mm 画出 4 条线（b）并且在原稿中心画出 1 条线（c）。
2. 将 MFP 的电源插头插入墙壁插座并打开主电源。
3. 在 DP 上设定原稿（a）并进行测试复印，确认机器动作和复印样本。
4. 对比复印样本和原稿（a），如果偏移值在标准值以上时，对偏移原稿进行调整。
   对 MFP 的图像确认和调整后再对 DP 的图像进行确认。详细内容请参见维修手册。

[작동확인]

1. 기계 작동 확인을 위해서 , A3 용지 선단에서 20mm 떨어진 곳에 4 개의 선 (b) 과 센터에 1 개의 선 (c) 이 그려진 원고 (a) 를 준비 .
2. 콘센트에 MFP 전원플러그를 꽂고 메인 전원 스위치를 ON 으로 합니다 .
3. DP 상에 원고 (a) 를 준비하고 테스트 카피를 확인하여 작동 상태와 카피 샘플를 확인합니다 .
4. 원고 (a) 와 카피 샘플을 비교하여 차이가 기준치를 벗어나는 경우 , 차이 (틈) 의 형태에 따라 다음을 조정합니다 .
   MFP 본체의 화상확인 및 조정을 하고나서 DP 본체의 화상확인을 할 것 . 상세는 서비스 매뉴얼을 참조할 것 .

[動作確認]

1. A3 サイズ用紙の端から 20mm の位置に線 (b)4 本と、用紙の中心に線 (c)1 本を引いた、動作確認用の原稿 (a) を用意する。
2. MFP の電源プラグをコンセントに差し込み、主電源スイッチを ON にする。
3. 原稿 (a) を DP にセットし、テストコピーを行い、動作およびコピーサンプルを確認する。
4. 原稿 (a) とコピーサンプルを比較し、基準値以上のずれがある場合、ずれ方に応じて調整を行う。
   MFP の画像確認及び調整を行ってから DP の画像確認を行うこと。詳細はサービスマニュアルを参照のこと。

TONER

Be sure to adjust in the following order. If not, the adjustment cannot be performed correctly.
For checking the angle of leading edge, see page 7. <Reference value> Simplex copying: within ±3.0 mm; Duplex copying: within ±4.0 mm
For checking the magnification, see page10. <Reference value> Within ±1.5%
For checking the leading edge timing, see page 12. <Reference value> Within ±2.0 mm
For checking the center line, see page 14. <Reference value> Simplex copying: within ±2.0 mm; Duplex copying: within ±3.0 mm
When using the original for adjustment, automatic adjustment of magnification, leading edge timing and center line can be performed at a time.
For the automatic adjustment using the original for adjustment, see page 16.

Veillez à effectuer le réglage en procédant dans l'ordre suivant. Sinon, il sera impossible d'obtenir un réglage correct.
Pour vérifier l'angle du bord avant, reportez-vous à la page 7. <Valeur de référence>Copie recto seul: ±3,0 mm max.; copie recto verso: ±4,0 mm max.
Pour vérifier l'agrandissement, reportez-vous à la page 10. <Valeur de référence>±1,5% max.
Pour vérifier la synchronisation du bord avant, reportez-vous à la page 12. <Valeur de référence>±2,0 mm max.
Pour vérifier la ligne médiane, reportez-vous à la page 14. <Valeur de référence>Copie recto seul: ±2,0 mm max.; Copie recto verso: ±3,0 mm max.
Lorsque vous utilisez l'original pour effectuer le réglage, vous pouvez effectuer automatiquement le réglage de l'agrandissement, de la synchronisation du bord avant et de la ligne médiane en une seule fois.
Pour le réglage automatique en utilisant l'original pour effectuer le réglage, reportez-vous à la page 16.

Asegúrese de ajustar en el siguiente orden. De lo contrario, el ajuste no puede hacerse correctamente.
Para verificar el ángulo del borde superior, vea la página 7. <Valor de referencia>Copia simple: dentro de ±3,0 mm; Copia duplex: dentro de ±4,0 mm
Para verificar el cambio de tamaño, vea la página 10. <Valor de referencia>Dentro de ±1,5 %
Para verificar la sincronización del borde superior, vea la página 12.<Valor de referencia>Dentro de ±2,0 mm
Para verificar la línea central, vea la página 14. <Valor de referencia>Copia simple: dentro de ±2,0 mm;Copia duplex: dentro de ±3,0 mm
Cuando utilice el original para el ajuste, puede hacerse un ajuste automático del cambio de tamaño, sincronización del borde superior y línea central al mismo tiempo.
Para el ajuste automático utilizando el original para el ajuste, vea la página 16.

Die Einstellung in der folgenden Reihenfolge durchführen. Anderenfalls kann die Einstellung nicht korrekt durchgeführt werden.
Angaben zur Prüfung des Winkels der Vorderkante auf Seite 7. <Bezugswert>Simplexkopie: innerhalb ±3,0 mm; Duplexkopie: innerhalb ±4,0 mm
Angaben zur Prüfung der Vergrößerung auf Seite 10. <Bezugswert> Innerhalb ±1,5 %
Angaben zur Prüfung des Vorderkanten-Timings auf Seite 12. <Bezugswert> Innerhalb ±2,0 mm
Angaben zur Prüfung der Mittellinie auf Seite 14. <Bezugswert> Simplexkopie: innerhalb ±2,0 mm; Duplexkopie: innerhalb ±3,0 mm
Bei Verwendung des Originals für die Einstellung können die automatischen Einstellungen für Vergrößerung, Vorderkanten-Timing und Mittellinie gleichzeitig durchgeführt werden.
Angaben zur automatischen Einstellung mithilfe des Originals auf Seite 16.

Accertarsi di eseguire le regolazioni in questa sequenza: in caso contrario, la regolazione non può essere effettuata correttamente.
Per controllare l'angolo del bordo principale, vedere pagina 7. <Valore di riferimento>Copia simplex: entro ±3,0 mm; Copia duplex: entro ±4,0 mm
Per controllare l'ingrandimento, vedere pagina 10. <Valore di riferimento>Entro ±1,5%
Per controllare la sincronizzazione del bordo principale, vedere pagina 12.<Valore di riferimento>Entro ±2,0 mm
Per controllare la linea centrale, vedere pagina 14. <Valore di riferimento>Copia simplex: entro ±2,0 mm; Copia duplex: entro ±3,0 mm
Quando si utilizza l'originale per la regolazione, la regolazione automatica dell'ingrandimento, della sincronizzazione del bordo principale e della linea centrale possono essere eseguiti contemporaneamente.
Per la regolazione automatica eseguita con l'originale, vedere pagina 16.

必须按照以下步骤进行调整，否则不能达到准确调整的要求。
・确认前端倾斜度 第 7 页 〈标准值〉 单面：±3.0㎜ 以内，双面：±4.0㎜ 以内
・确认等倍值 第 10 页 〈标准值〉 ±1.5% 以内
・确认前端定时调整 第 12 页 〈标准值〉 ±2.0㎜ 以内
・确认中心线 第 14 页 〈标准值〉 单面：±2.0㎜ 以内，双面：±3.0㎜ 以内
使用调整用的原稿时，可以同时自动进行等倍值，前端定时以及中心线的调整。
・通过调整用原稿进行自动调整 第 16 页

반드시 하기의 순서로 조정을 할 것 . 순서대로 조정을 하지 않는 경우 바른 조정을 할 수 없습니다 .
・선단경사확인 7 페이지 <기준치>단면:±3.0mm 이내 , 양면:±4.0mm 이내
・등배도 확인 10 페이지 <기준치> ±1.5% 이내
・선단 타이밍 확인 12 페이지 <기준치> ±2.0mm 이내
・센터 라인확인 14 페이지 <기준치> 단면:±2.0mm 이내 , 양면:±3.0mm 이내
조정용 원고를 사용하면 등배도 조정 , 선단타이밍 조정 , 센터 라인조정의 자동조정이 한번에 수행됩니다 .
・조정용원고를 사용한 자동조정은 16 페이지 참조

必ず下記の順序で調整を行うこと。順序通りに調整を行わない場合、正しい調整ができない。
・先端斜め確認 7 ページ ＜基準値＞片面:±3.0㎜ 以内、両面:±4.0㎜ 以内
・等倍度確認 10 ページ ＜基準値＞ ±1.5% 以内
・先端タイミング確認 12 ページ ＜基準値＞ ±2.0㎜ 以内
・センターライン確認 14 ページ ＜基準値＞片面:±2.0㎜ 以内、両面:±3.0㎜ 以内
調整用原稿を使用すると、等倍度調整、先端タイミング調整、センターライン調整の自動調整が一度におこなえる。
・調整用原稿による自動調整 16 ページ

TONER
www.tonerprice.com.ua

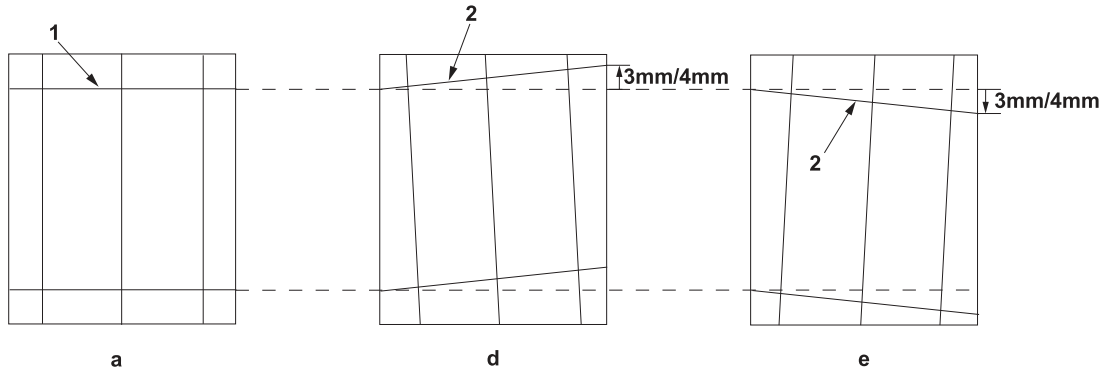

[Checking the angle of leading edge]

1. Check the horizontal gap between line (1) of original (a) and line (2) of copy example positions. If there is the gap, adjust the gap according to the following procedure.
<Reference value> For single copying: The horizontal gap of line (2) should be within ±3.0 mm.
For duplex copying: The horizontal gap of line (2) should be within ±4.0 mm.

[Vérification de l'angle du bord avant]

1. Vérifier l'écart horizontal entre la position de la ligne (1) de l'original (a) et celle de la ligne (2) de l'exemple de copie. S'il existe un écart, le régler selon la procédure suivante.
<Valeur de référence> Pour la copie recto-seul : l'écart horizontal de la ligne (2) doit être de ±3,0 mm.
Pour la copie recto-verso : l'écart horizontal de la ligne (2) doit être de ±4,0 mm.

[Verificación del ángulo del borde superior]

1. Compruebe la separación horizontal entre la línea (1) del original (a) y la línea (2) de las posiciones del ejemplo de copia. Si queda una separación, ajústela siguiendo el siguiente procedimiento.
<Valor de referencia> Para el copiado por una cara: la separación horizontal de la línea (2) debe estar dentro de ±3,0 mm.
Para el copiado dúplex: la separación horizontal de la línea (2) debe estar dentro de ±4,0 mm.

[Überprüfen des Winkels der Vorderkante]

1. Den horizontalen Abstand zwischen der Linie (1) des Originals (a) und der Linie (2) der Kopierbeispielspositionen prüfen. Falls ein Abstand zu sehen ist, justieren Sie diesen durch die folgende Vorgehensweise.
<Bezugswert> Einzelkopie: Der horizontale Abstand der Linie (2) sollte innerhalb von ±3,0 mm liegen.
Duplexkopie: Der horizontale Abstand der Linie (2) sollte innerhalb von ±4,0 mm liegen.

[Controllo dell'angolo del bordo principale]

1. Verificare lo scostamento orizzontale fra la linea (1) dell'originale (a) e la linea (2) delle posizioni dell'esempio di copia. Se vi è uno scostamento, regolarlo attenendosi alla seguente procedura.
<Valore di riferimento> Per la copia singola: lo scostamento orizzontale della linea (2) deve limitarsi a ± 3,0 mm.
Per la copia duplex: lo scostamento orizzontale della linea (2) deve limitarsi a ±4,0 mm.

[确认前端倾斜度]

1. 确认原稿（a）上的线（1）和复印样本上的线（2）的左右偏移值。如有偏移，请按下面的步骤来调整。
〈标准值〉单面复印时，线（2）的左右偏移值：±3.0㎜ 以内。
双面复印时，线（2）的左右偏移值：±4.0㎜ 以内。

[선단 경사확인]

1. 원고 (a) 의 선 (1) 과 샘플 카피의 선 (2) 의 좌우 차이를 확인합니다 . 차이가 있는 경우 , 다음 과정을 통하여 차이를 조정합니다 .
＜기준치＞단면의 경우 선 (2) 의 좌우차이:±3.0mm 이내
양면의 경우 선 (2) 의 좌우차이:±4.0mm 이내

TONER

[先端斜め確認]

1. 原稿 (a) の線 (1) とコピーサンプルの線 (2) の左右のずれを確認する。ずれがある場合、次の手順で調整を行う。
＜基準値＞片面の場合、線 (2) の左右ずれ:±3.0㎜ 以内
両面の場合、線 (2) の左右ずれ:±4.0㎜ 以内

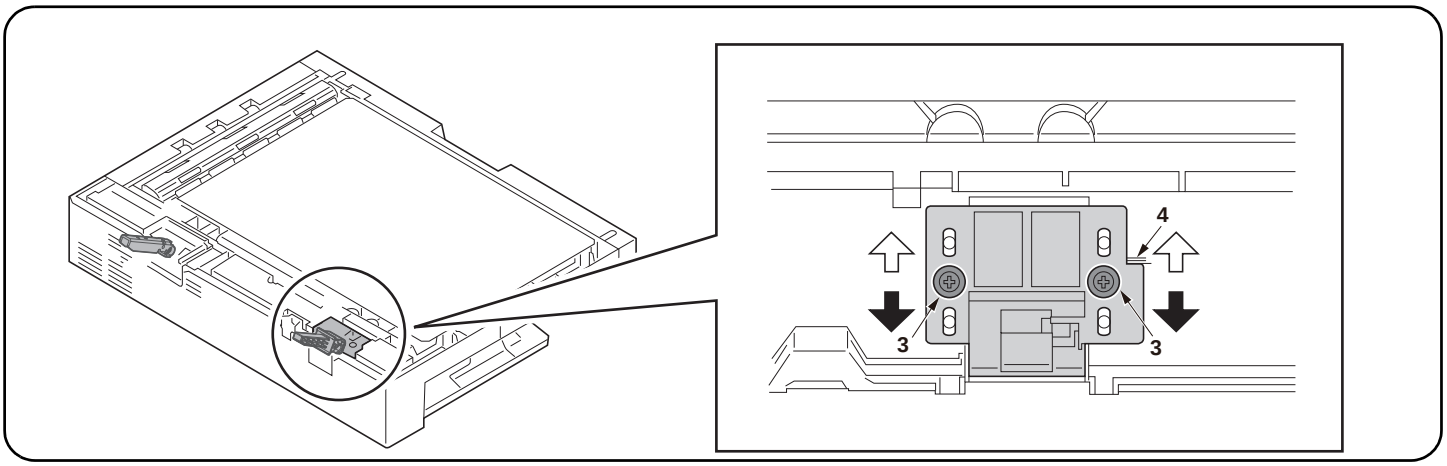

2. Turn off the main power switch of the machine.Open DP(A). Perform the steps 4, 5, 6, and 8 in its reverse order on pages 2 and 3 to remove the DP from the MFP.
3. Loosen two adjusting screws (3) of the right hinge.
4. Adjust the position of the right hinge.
In case of copy sample (d): Move the right hinge up (⇨).
In case of copy sample (e): Move the right hinge down (⬅).
Amount of change per scale: Approx. 1.0 mm (4)
5. After the adjustment, retighten 2 adjusting screws (3) which were loosed in step 3.

---

2. Mettez la machine hors tension.Ouvrez le DP(A). Effectuez les étapes 4, 5, 6 et 8 dans l'ordre inverse aux pages 2 et 3 pour retirer le DP du MFP.
3. Desserrez 2 vis de réglage (3) de la charnière droite.
4. Ajustez la position de la charnière droite.
Dans le cas de l'exemple de copie (d) : Déplacer la charnière de droite vers le haut (⇨).
Dans le cas de l'exemple de copie (e) : Déplacer la charnière de droite vers le bas (⬅).
Changement par graduation d'échelle : environ 1,0 mm (4)
5. Après l'ajustement, resserrez les 2 vis de réglage (3) qui ont été desserrées à l'étape 3.

---

2. Apague el interruptor de encendido de la máquina.Abra el DP(A). Realice los pasos 4, 5, 6 y 8 de las páginas 2 y 3 pero al revés para quitar el DP del dispositivo MFP.
3. Suelte los 2 tornillos de ajuste (3) de la bisagra derecha.
4. Ajuste la posición de la bisagra derecha.
En caso de muestra de copia (d): Suba la bisagra derecha (⇨).
En caso de muestra de copia (e): Baje la bisagra derecha (⬅).
Magnitud del cambio por escala: aprox. 1,0 mm (4)
5. Después del ajuste, vuelva a apretar los 2 tornillos de ajuste (3) que se aflojaron en el paso 3.

---

2. Schalten Sie das Gerät über den Hauptschalter aus.Öffnen Sie DP(A). Führen Sie die Schritte 4, 5, 6 und 8 in umgekehrter Reihenfolge wie auf den Seiten 2 und 3 beschrieben aus. Entfernen Sie den DP vom MFP.
3. Lösen Sie die 2 Justierungsschrauben (3) des rechten Scharniers.
4. Justieren Sie die Position des rechten Scharniers.
Bei Verwendung der Kopiervorlage (d): Bewegen Sie das rechte Scharnier nach oben (⇨).
Bei Verwendung der Kopiervorlage (e): Bewegen Sie das rechte Scharnier nach unten (⬅).
Änderung pro Maßstab: Ungefähr 1,0 mm (4)
5. Nachdem Sie die Einstellung vorgenommen haben, ziehen Sie die 2 Justierschrauben (3) wieder an, die Sie in Schritt 3 gelöst hatten.

---

2. Spegnere l'interruttore di alimentazione della macchina.Aprire il DP(A). Eseguire i punti 4, 5, 6 e 8 eseguendo le operazioni in ordine contrario rispetto a quanto indicato a pagina 2 e 3 per rimuovere il DP dal dispositivo MFP.
3. Allentare le 2 viti di regolazione (3) sulla cerniera di destra.
4. Regolare la posizione della cerniera di destra.
Nel caso dell'esempio copia (d): Alzare la cerniera destra (⇨).
Nel caso dell'esempio copia (e): Abbassare la cerniera destra (⬅).
Entità modifica per scala: circa 1,0 mm (4)
5. Dopo la regolazione, serrare di nuovo le 2 viti di regolazione (3), allentate al punto 3.

---

2. 关闭机器的主电源开关。打开 DP（A）。按照第 2 ～ 3 页的步骤 4、5、6 和 8 的相反顺序，把 DP 从机器上取下。
3. 拧松右铰链的 2 颗调整螺丝（3）。
4. 调整右铰链的位置。
当处于样张（d）：将右铰链向上（⇨）移动。
当处于样张（e）：将右铰链向下（⬅）移动。
按比例尺的更改量：约 1.0mm（4）
5. 调整完成后，重新拧紧在步骤 3 中松开的 2 颗调整螺丝（3）。

---

2. 기계의 전원을 OFF 합니다 .DP(A) 를 엽니다 . 페이지 2 와 페이지 3 의 반대의 순서대로 4,5,6,8 단계를 수행하여 MFP 에서 DP 를 제거합니다 .
3. 우측 힌지에서 두 개의 조정 나사 (3) 를 느슨하게 합니다 .
4. 우측 힌지의 위치를 조정합니다 .
복사 샘플 (d) 의 경우: 우측 힌지를 위쪽 (⇨) 에 움직입니다 .
복사 샘플 (e) 의 경우 :우측 힌지를 아래쪽 (⬅) 에 움직입니다 .
눈금당 변화량:약 1.0 mm (4)
5. 조정종료 후 순서 3 에서 느슨하게 한 조정나사 (3) 2 개를 조입니다 .

---

2. 機械の主電源スイッチを OFF にする。DP を開く。2 ～ 3 ページの手順 4,5,6,8 の逆手順で DP を MFP から取り外す。
3. 右ヒンジの調整ビス (3)2 本を緩める。
4. 右ヒンジの位置を調整する。
コピーサンプル (d) の場合:右ヒンジを上(⇨)へ動かす。
コピーサンプル (e) の場合:右ヒンジを下(⬅)へ動かす。
1 目盛り当たりの変化量:約 1.0mm (4)
5. 調整終了後、手順 3 で緩めた調整ビス (3)2 本を締め付ける。

TONER .com.ua

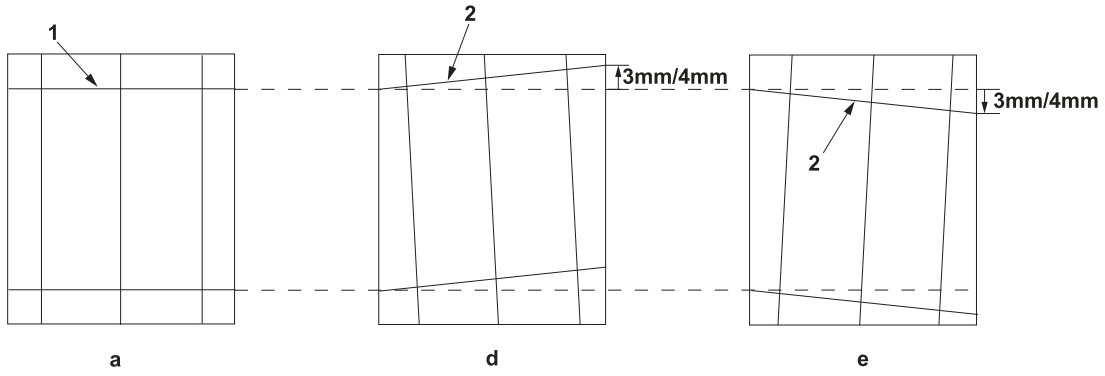

6. Perform the steps 4, 5, 6, 7 and 8 on pages 2 and 3 to reinstall the DP on the MFP.
7. Turn on the main power switch of the machine. Perform a test copy.
8. Repeat the steps above until the gap of line (2) of copy example shows the following reference values.
<Reference value>For single copying: The horizontal gap of line (2) should be within ±3.0 mm.
For duplex copying: The horizontal gap of line (2) should be within ±4.0 mm.

---

6. Effectuez les étapes 4, 5, 6, 7 et 8 aux pages 2 et 3 pour réinstaller le DP sur le MFP.
7. Mettez la machine sous tension. Effectuer une copie de test.
8. Répéter les étapes ci-dessus jusqu'à ce que l'écart de la ligne (2) de l'exemple de copie indique les valeurs de référence suivantes.
<Valeur de référence>Pour la copie recto-seul : l'écart horizontal de la ligne (2) doit être de ±3,0 mm.
Pour la copie recto-verso : l'écart horizontal de la ligne (2) doit être de ±4,0 mm.

---

6. Realice los pasos 4, 5, 6, 7 y 8 de las páginas 2 y 3 para reinstalar el DP en el dispositivo MFP.
7. Encienda el interruptor de encendido de la máquina. Haga una copia de prueba.
8. Repita los pasos anteriores hasta que la separación de la línea (2) del ejemplo de copia presente los siguientes valores de referencia.
<Valor de referencia>Para el copiado por una cara: la separación horizontal de la línea (2) debe estar dentro de ±3,0 mm.
Para el copiado dúplex: la separación horizontal de la línea (2) debe estar dentro de ±4,0 mm.

---

6. Führen Sie auf den Seiten 2 und 3 die Schritte 4, 5, 6, 7 und 8 aus, um den DP wieder am MFP zu installieren.
7. Schalten Sie das Gerät über den Hauptschalter ein. Eine Testkopie erstellen.
8. Die obigen Schritte wiederholen, bis der Abstand der Linie (2) des Kopierbeispiels die folgenden Bezugswerte aufweist.
<Bezugswert>Einzelkopie: Der horizontale Abstand der Linie (2) sollte innerhalb von ±3,0 mm liegen.
Duplexkopie: Der horizontale Abstand der Linie (2) sollte innerhalb von ±4,0 mm liegen.

---

6. Eseguire i punti 4, 5, 6, 7 e 8 a pagina 2 e 3 per reinstallare il DP sul sistema MFP.
7. Accendere l'interruttore di alimentazione della macchina. Eseguire una copia di prova.
8. Ripetere le operazioni sopra descritte fino a quando lo scostamento della linea (2) dell'esempio di copia riporterà i valori di riferimento seguenti.
<Valore di riferimento>Per la copia singola: lo scostamento orizzontale della linea (2) deve limitarsi a ± 3,0 mm.
Per la copia duplex: lo scostamento orizzontale della linea (2) deve limitarsi a ±4,0 mm.

---

6. 按照第 2 ～ 3 页的步骤 4 ～ 8，把 DP 再次装回机器。
7. 打开机器的主电源开关。 进行测试复印。
8. 重复上述步骤直至复印样本上的线（2）的偏移值达到标准值范围内。
〈 标准值 〉 单面时，线（2）的左右偏移值 ：±3.0㎜ 以内
双面时，线（2）的左右偏移值 ：±4.0㎜ 以内

---

6. 페이지 2~3 의 4 단계에서 8 단계를 실행하여 MFP 에 DP 를 재설치합니다 .
7. 기계의 전원을 ON 합니다 . 테스트 카피를 합니다 .
8. 샘플 카피 선 (2) 차이가 기준치내가 될 때까지 조정을 반복합니다 .
＜기준치＞단면의 경우 선 (2) 의 좌우차이 :±3.0mm 이내
양면의 경우 선 (2) 의 좌우차이 :±4.0mm 이내

TONER

---

6. 2 ～ 3 ページの手順 4 ～ 8 の手順で DP を再度取り付ける。
7. 機械の主電源スイッチを ON にする。テストコピーを行う。
8. コピーサンプルの線 (2) のずれが基準値内になるまで、調整を繰り返す。
＜基準値＞片面の場合、線 (2) の左右ずれ:±3.0㎜ 以内
両面の場合、線 (2) の左右ずれ:±4.0㎜ 以内

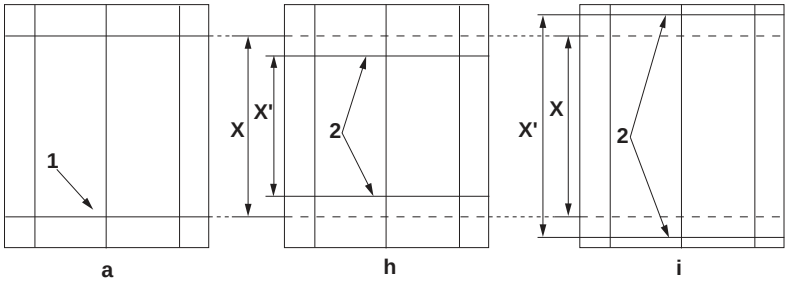

$$-1.5\% \leqq \frac{X - X'}{X} \times 100 \leqq +1.5\%$$

[Checking the magnification]

1. Check the gap between line (1) of original (a) and line (2) (3) of copy example. If there is the gap, adjust the gap according to the following procedure.
<Reference value>
For the sub-scan direction, vertical gap of line (2): within ±1.5%
For the main-scan direction, horizontal gap of line (3): within ±1.5%

2. Use the maintenance mode U070 to adjust the magnification.
X Zoom(F): Adjusts the scanner sub-scan magnification (surface)
X Zoom(B): Adjusts the scanner sub-scan magnification (rear side)

[Vérification de l'agrandissement]

1. Vérifier l'écart entre la ligne (1) de l'original (a) et la ligne (2) (3) de l'exemple de copie. S'il existe un écart, le régler selon la procédure suivante.
<Valeur de référence>
Pour la direction du balayage secondaire, l'écart vertical de la ligne (2) est de ±1,5%
Pour la direction du balayage principal, l'écart horizontal de la ligne (3) est de ±1,5%

2. Pour régler l'agrandissement, utilisez le mode entretien U070.
X Zoom(F): Permet de régler l'agrandissement du balayage secondaire du scanner(surface)
X Zoom(B): Permet de régler l'agrandissement du balayage secondaire du scanner (arrière)

[Verificación del cambio de tamaño]

1. Compruebe la separación entre la línea (1) del original (a) y la línea (2) (3) del ejemplo de copia. Si queda una separación, ajústela siguiendo el siguiente procedimiento.
<Valor de referencia>
Para la dirección de exploración secundaria, separación vertical de la línea (2): dentro de ±1,5%
Para la dirección de exploración principal, separación horizontal de la línea (3): dentro de ±1,5%

2. Para ajustar la ampliación utilice el modo de mantenimiento U070.
X Zoom(F): ajusta el cambio de tamaño de la dirección de exploración secundaria del escáner(anverso).
X Zoom(B): ajusta el cambio de tamaño de la dirección de exploración secundaria del escáner(reverso).

[Überprüfen der Vergrößerung]

1. Den Abstand zwischen der Linie (1) des Originals (a) und der Linie (2) (3) des Kopierbeispiels prüfen. Falls ein Abstand zu sehen ist, justieren Sie diesen durch die folgende Vorgehensweise.
<Bezugswert>
Subscanrichtung: Vertikaler Abstand der Linie (2): Innerhalb ±1,5%
Hauptscanrichtung: Horizontaler Abstand der Linie (3): Innerhalb ±1,5%

2. Zum Einstellen der Vergrößerung den Wartungsmodus U070 verwenden.
X Zoom(F): Zur Einstellung der Subscan-Vergrößerung(Oberfläche)
X Zoom(B): Zur Einstellung der Subscan-Vergrößerung (Rückseite)

[Controllo dell'ingrandimento]

1. Verificare lo scostamento fra la linea (1) dell'originale (a) e la linea (2) (3) dell'esempio di copia. Se vi è uno scostamento, regolarlo attenendosi alla seguente procedura.
<Valore di riferimento>
Per l'orientamento della scansione ausiliare, lo scostamento verticale della linea (2) deve essere compreso fra ±1,5%
Per l'orientamento della scansione principale, lo scostamento orizzontale della linea (3) deve essere compreso fra ±1,5%

2. Usare la modalità di manutenzione U070 per regolare l'ingrandimento.
X Zoom(F): Regola l'ingrandimento della scansione ausiliare dello scanner (superficie)
X Zoom(B): Regola l'ingrandimento della scansione ausiliare dello scanner(lato posteriore)

[确认等倍值]

1. 确认原稿（a）上的线（1）和复印样本上的线（2）、（3）之间的偏移值。如有偏移，请按下面的步骤来调整。
〈 标准值 〉
对于副扫描方向，线（2）的上下偏移值：±1.5% 以内
对于主扫描方向，线（3）的左右偏移值：±1.5% 以内

2. 使用维修模式 U070 调整等倍值。
X Zoom(F)：读取副扫描等倍度的调整（正面）
X Zoom(B)：读取副扫描等倍度的调整（反面）

등배도확인]

1. 원고 (a) 선 (1) 과 벨크로의 선 (2)(3) 의 차이를 확인합니다 . 차이가 있는 경우 , 다음 과정을 통하여 차이를 조정합니다 .
＜기준치＞
부주사 방향의 경우 선 (2) 의 상하차이:±1.5% 이내
주주사 방향의 경우 선 (3) 의 좌우차이:±1.5% 이내

2. 메인터넌스 모드 U070 을 세트하고 조정을 합니다 .
X Zoom(F):스캔 부주사등배도의 조정 (표면)
X Zoom(B):스캔 부주사등배도의 조정 (뒷면)

[等倍度確認]

1. 原稿 (a) の線 (1) とコピーサンプルの線 (2) (3) のずれを確認する。ずれがあるの場合、次の手順で調整を行う。
＜基準値＞
副走査方向の場合、線 (2) の上下ずれ:±1.5% 以内

2. メンテナンスモード U070 をセットし、調整を行う。
X Zoom(F):読み取り副走査等倍度の調整 (表面)
X Zoom(B):読み取り副走査等倍度の調整 (裏面)

TONER

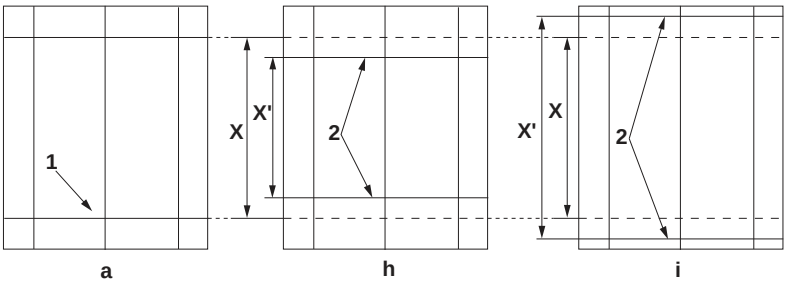

$$-1.5\% \leqq \frac{X - X'}{X} \times 100 \leqq +1.5\%$$

3. Adjust the values up and down by using "Zoom" key and "Paper Selection" key.
For the shorter length copy example (h): Increases the value.
For the longer length copy example (i): Decreases the value.
Amount of change per step: 0.10 %
4. Perform a test copy.

5. Repeat the steps 2 to 4 above until the gap of line (2) (3) of copy example shows the reference value.
<Reference value>
For the sub-scan direction, vertical gap of line (2): within ±1.5%
For the main-scan direction, horizontal gap of line (3): within ±1.5%

---

3. Augmentez ou diminuer les valeurs en utilisant la touche " Zoom " et la touche " Sélection du papier ".
Pour l'exemple de copie dont la longueur est plus courte (h) : augmenter la valeur.
Pour l'exemple de copie dont la longueur est plus longue (i) : diminuer la valeur.
Changement par graduation d'échelle : 0,10 %
4. Effectuer une copie de test.

5. Répéter les étapes 2 à 4 jusqu'à ce que l'écart de la ligne (2) (3) de l'exemple de copie indique la valeur de référence.
<Valeur de référence>
Pour la direction du balayage secondaire, l'écart vertical de la ligne (2) est de ±1,5%
Pour la direction du balayage principal, l'écart horizontal de la ligne (3) est de ±1,5%

---

3. Ajuste los valores arriba y abajo con la tecla "Zoom" y la tecla "Selección de papel".
Para el ejemplo de copia más corto (h): aumenta el valor.
Para el ejemplo de copia más largo (i): disminuye el valor.
Magnitud del cambio por incremento: 0,10 %
4. Haga una copia de prueba.

5. Repita los pasos 2 a 4 anteriores hasta que la separación de la línea (2) (3) del ejemplo de copia presente el valor de referencia.
<Valor de referencia>
Para la dirección de exploración secundaria, separación vertical de la línea (2): dentro de ±1,5%
Para la dirección de exploración principal, separación horizontal de la línea (3): dentro de ±1,5%

---

3. Stellen Sie die Werte über die Tasten "Zoom" und "Papierauswahl" ein.
Für die kürzere Länge des Kopierbeispiels (h): Den Wert erhöhen.
Für die längere Länge des Kopierbeispiels (i): Den Wert verringern.
Änderung pro Schritt: 0,10 %
4. Eine Testkopie erstellen.

5. Die Schritte 2 bis 4 wiederholen, bis der Abstand der Linie (2) (3) des Kopierbeispiels den Bezugswert aufweist.
<Bezugswert>
Subscanrichtung: Vertikaler Abstand der Linie (2): Innerhalb ±1,5%
Hauptscanrichtung: Horizontaler Abstand der Linie (3): Innerhalb ±1,5%

---

3. Regolare i valori verso l'alto o verso il basso utilizzando il pulsante "Zoom" oppure il pulsante "Selezione carta".
Per l'esempio di copia di lunghezza inferiore (h): aumenta il valore.
Per l'esempio di copia di lunghezza superiore (i): riduce il valore.
Entità modifica per passo: 0,10 %
4. Eseguire una copia di prova

5. Ripetere le operazioni sopra descritte da 2 a 4 fino a quando lo scostamento della linea (2) (3) dell'esempio di copia riporterà i valori di riferimento.
<Valore di riferimento>
Per l'orientamento della scansione ausiliare, lo scostamento verticale della linea (2) deve essere compreso fra ±1,5%
Per l'orientamento della scansione principale, lo scostamento orizzontale della linea (3) deve essere compreso fra ±1,5%

---

3. 使用〞缩小 / 放大〞键和〞纸张选择〞键来上下调整设定值。
在长度偏短时　复印样本（h）：调高设定值
在长度偏长时　复印样本（i）：调低设定值
设定值的一个调整单位变化量：0.10%
4. 进行测试复印。

5. 重复上述步骤 2 到 4，直至复印样本上的线（2）、（3）之间的偏移值达到标准值范围内。
〈标准值〉
对于副扫描方向，线（2）的上下偏移值：±1.5% 以内
对于主扫描方向，线（3）的左右偏移值：±1.5% 以内

---

3. " 축소 / 확대 " 키와 " 용지선택 " 키를 사용하여 값을 조정합니다 .
길이가 짧은 경우 벨크로 (h):설정치를 높입니다 .
길이가 긴 경우 벨크로 (i):설정치를 내립니다 .
1 스텝당 변화량:0.10%
4. 벨크로를 합니다 .

5. 벨크로 선 (2)(3) 의 차이가 기준치내가 될 때까지 2 ~ 4 를 반복합니다 .
＜기준치＞
부주사 방향의 경우 선 (2) 의 상하차이:±1.5% 이내
주주사 방향의 경우 선 (3) 의 좌우차이:±1.5% 이내

---

3. " 拡大 " キーと " 用紙選択 " キーにより設定値を上下し調整する。
長さが短い場合コピーサンプル (h):設定値を上げる
長さが長い場合コピーサンプル (i):設定値を下げる
1 ステップ当たりの変化量:0.10%
4. テストコピーを行う。

5. コピーサンプルの線 (2) (3) のずれが基準値内になるまで手順 2 ～ 4 を繰り返す。
＜基準値＞
副走査方向の場合、線 (2) の上下ずれ:±1.5% 以内

TONER
www.tonerdepot.com

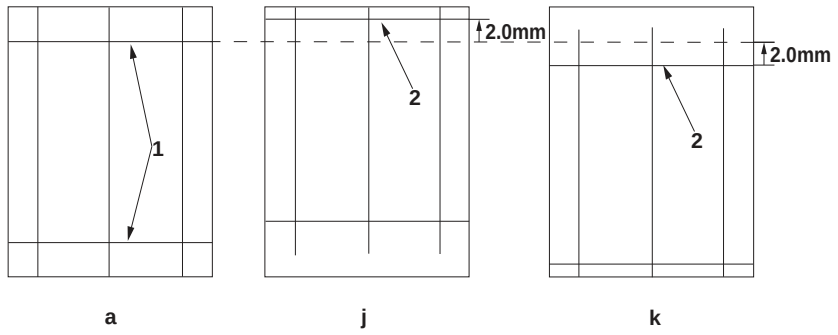

[Checking the leading edge timing]

1. Check the gap between line (1) on original (a) and line (2) of copy example.If there is the gap, adjust the gap according to the following procedure.
<Reference value>
Vertical gap of line (2): within ±2.0 mm

2. Use the maintenance mode U071 to adjust the timing.
Front Head: Adjusts the leading edge timing (surface)
Back Head: Adjusts the leading edge timing (rear side)

[Vérification de la synchronisation du bord avant]

1. Vérifier l'écart entre la ligne (1) de l'original (a) et la ligne (2) de l'exemple de copie. S'il existe un écart, le régler selon la procédure suivante.
<Valeur de référence>
Écart vertical de la ligne (2) : ±2,0 mm

2. Pour régler la synchronisation, utilisez le mode entretien U071.
Front Head: Permet de régler la synchronisation du bord de tête (surface)
Back Head: Permet de régler la synchronisation du bord de tête (arrière)

[Cambio de la sincronización de borde superior]

1. Compruebe la separación entre la línea (1) del original (a) y la línea (2) del ejemplo de copia. Si queda una separación, ajústela siguiendo el siguiente procedimiento.
<Valor de referencia>
Separación vertical de la línea (2): dentro de ±2,0 mm

2. Para ajustar la sincronización utilice el modo de mantenimiento U071.
Front Head: Ajusta la sincronización del borde superior (anverso).
Back Head: Ajusta la sincronización del borde superior (reverso).

[Überprüfen des Vorderkanten-Timings]

1. Den Abstand zwischen der Linie (1) des Originals (a) und der Linie (2) des Kopierbeispiels prüfen. Falls ein Abstand zu sehen ist, justieren Sie diesen durch die folgende Vorgehensweise.
<Bezugswert>
Vertikaler Abstand der Linie (2): Innerhalb ±2,0 mm

2. Zum Einstellen des Timing den Wartungsmodus U071 verwenden.
Front Head: Zur Einstellung des Vorderkanten-Timing (Oberfläche)
Back Head: Zur Einstellung des Vorderkanten-Timing (Rückseite)

[Controllo della sincronizzazione del bordo principale]

1. Verificare lo scostamento fra la linea (1) sull'originale (a) e la linea (2) dell'esempio di copia. Se vi è uno scostamento, regolarlo attenendosi alla seguente procedura.
<Valore di riferimento>
Scostamento verticale della linea (2) compreso fra ±2,0 mm

2. Usare la modalità di manutenzione U071 per regolare la sincronizzazione.
Front Head: Regola la sincronizzazione del bordo principale (superficie)
Back Head: Regola la sincronizzazione del bordo principale (lato posteriore)

[确认前端定时调整]

1. 确认原稿（a）上的线（1）和复印样本上的线（2）之间的偏移值。如有偏移，请按下面的步骤来调整。
〈 标准值 〉
线（2）的上下偏移值 ：±2.0mm 以内

2. 使用维修模式 U071 调整定时。
Front Head ：调整前端对位（ 正面 ）
Back Head ：调整前端对位（ 反面 ）

[선단 타이밍확인]

1. 원고 (a) 선 (1) 과 벨크로 선 (2) 의 차이를 확인합니다 . 차이가 있는 경우 , 다음 과정을 통하여 차이를 조정합니다 .
＜기준치＞
선 (2) 의 상하차이:±2.0mm 이내

2. 메인터넌스 모드 U071 을 세트하고 조정을 합니다 .
Front Head :선단 타이밍 (표면) 을 조정합니다 .
Back Head :선단 타이밍 (뒷면) 을 조정합니다 .

[先端タイミング確認]

1. 原稿 (a) の線 (1) とコピーサンプルの線 (2) のずれを確認する。ずれがある場合、次の手順で調整を行う。
＜基準値＞
線 (2) の上下ずれ:±2.0mm 以内

2. メンテナンスモード U071 をセットし、調整を行う。
Front Head :先端タイミング（ 表面 ）を調整する
Back Head: 先端タイミング（ 裏面 ）を調整する

TONER

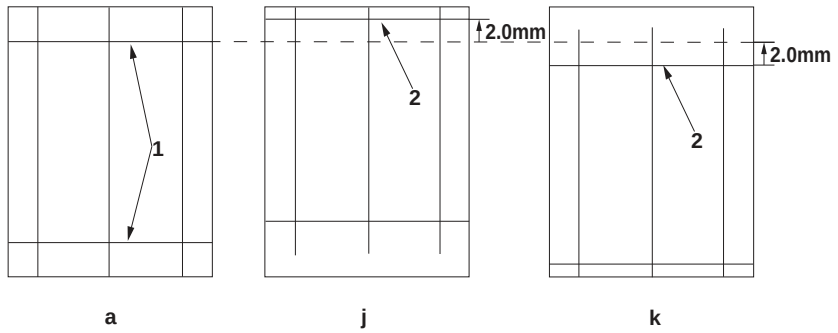

3. Adjust the values up and down by using "Zoom" key and "Paper Selection" key.
For the faster leading edge timing, copy examples (j): Decreases the value.
For the slower leading edge timing, copy examples (k): Increases the value.
Amount of change per step: 0.17 mm

4. Perform a test copy.

5. Repeat the steps 2 to 4 above until the gap of line (2) of copy example shows the reference value.
<Reference value>
Vertical gap of line (2): within ±2.0 mm

---

3. Augmentez ou diminuer les valeurs en utilisant la touche " Zoom " et la touche " Sélection du papier ".
Pour les exemples de copie dont la synchronisation du bord avant est plus rapide (j) : diminuer la valeur.
Pour les exemples de copie dont la synchronisation du bord avant est plus lente (k) : augmenter la valeur.
Changement par graduation d'échelle : 0,17 mm

4. Effectuer une copie de test.

5. Répéter les étapes 2 à 4 jusqu'à ce que l'écart de la ligne (2) de l'exemple de copie indique la valeur de référence.
<Valeur de référence>
Écart vertical de la ligne (2) : ±2,0 mm

---

3. Ajuste los valores arriba y abajo con la tecla "Zoom" y la tecla "Selección de papel".
Para una sincronización más rápida de extremo guía, ejemplos de copia (j): disminuye el valor.
Para una sincronización más lenta de extremo guía, ejemplos de copia (k): aumenta el valor.
Magnitud del cambio por incremento: 0,17 mm

4. Haga una copia de prueba.

5. Repita los pasos 2 a 4 anteriores hasta que la separación de la línea (2) del ejemplo de copia presente el valor de referencia.
<Valor de referencia>
Separación vertical de la línea (2): dentro de ±2,0 mm

---

3. Stellen Sie die Werte über die Tasten "Zoom" und "Papierauswahl" ein.
Für den schnelleren Vorderkantentakt, Kopierbeispiel (j): Den Wert verringern.
Für den langsameren Vorderkantentakt, Kopierbeispiel (k): Den Wert erhöhen.
Änderung pro Schritt: 0,17 mm

4. Eine Testkopie erstellen.

5. Die Schritte 2 bis 4 wiederholen, bis der Abstand der Linie (2) des Kopierbeispiels den Bezugswert aufweist.
<Bezugswert>
Vertikaler Abstand der Linie (2): Innerhalb ±2,0 mm

---

3. Regolare i valori verso l'alto o verso il basso utilizzando il pulsante "Zoom" oppure il pulsante "Selezione carta".
Per accelerare la fasatura del bordo di entrata, esempi di copia (j): riduce il valore.
Per rallentare la fasatura del bordo di entrata, esempi di copia (k): aumenta il valore.
Entità modifica per passo: 0,17 mm

4. Eseguire una copia di prova

5. Ripetere le operazioni sopra descritte da 2 a 4 fino a quando lo scostamento della linea (2) dell'esempio di copia riporterà i valori di riferimento.
<Valore di riferimento>
Scostamento verticale della linea (2) compreso fra ±2,0 mm

---

3. 使用〞缩小 / 放大〞键和〞纸张选择〞键来上下调整设定值。
在前端定时偏快时　复印样本（j）：调低设定值
在前端定时偏慢时　复印样本（k）：调高设定值
设定值的一个调整单位变化量：0.17㎜

4. 进行测试复印。

5. 重复上述步骤 2 到 4，直至复印样本上的线（2）的偏移值达到标准值范围内。
〈标准值〉
线（2）的上下偏移值：±2.0㎜ 以内

---

3. " 축소 / 확대 " 키와 " 용지선택 " 키를 사용하여 값을 조정합니다 .
선단 타이밍이 빠른 경우 벨크로 (j):설정치를 내립니다 .
선단 타이밍이 늦은 경우 벨크로 (k):설정치를 올립니다 .
1 스텝당 변화량:0.17mm

4. 벨크로를 합니다 .

5. 벨크로 선 (2) 의 차이가 기준치내가 될 때까지 2 ~ 4 를 반복합니다 .
＜기준치＞
선 (2) 의 상하차이:±2.0mm 이내

---

3. “ 拡大 ” キーと “ 用紙選択 ” キーにより設定値を上下し調整する。
先端タイミングが早い場合コピーサンプル (j):設定値を下げる。
先端タイミングが遅い場合コピーサンプル (k):設定値を上げる。
1 ステップ当たりの変化量:0.17㎜

4. テストコピーを行う。

5. コピーサンプルの線 (2) のずれが基準値内になるまで手順 2 ～ 4 を繰り返す。
＜基準値＞
線 (2) の上下ずれ:±2.0㎜ 以内

TONER

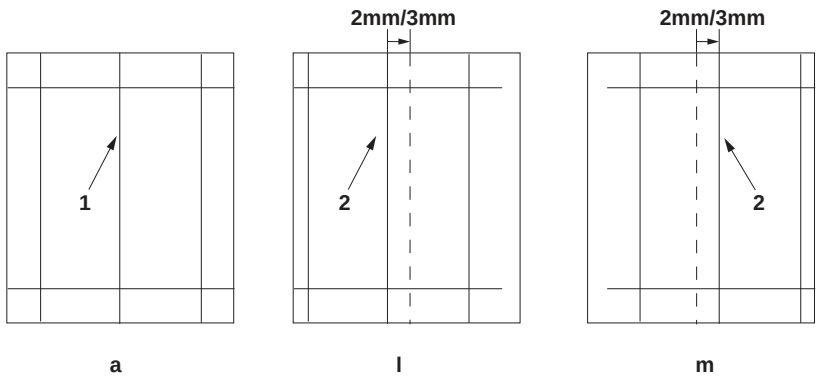

[Checking the center line]

1. Check the gap between center line (1) on original (a) and center line (2) of copy example. If there is the gap, adjust the gap according to the following procedure.
   <Reference value>
   Horizontal difference of center line (2) for the single copying: ±2.0 mm
   Horizontal difference of center line (2) for the duplex copying: ±3.0 mm
2. Use the maintenance mode U072 to adjust the timing.
   Front: Adjusts the center line (surface)
   Back: Adjusts the center line (rear side)

[Vérification de la ligne médiane]

1. Vérifier l'écart entre l'axe (1) de l'original (a) et l'axe (2) de l'exemple de copie. S'il existe un écart, le régler selon la procédure suivante.
   <Valeur de référence>
   Différence horizontale de l'axe (2) pour la copie recto : ±2,0 mm
   Différence horizontale de l'axe (2) pour la copie recto-verso : ±3,0 mm
2. Pour régler la ligne médiane, utiliser le mode entretien U072.
   Front: Permet de régler l'axe (surface)
   Back: Permet de régler l'axe (arrière)

[Verificación de la línea central]

1. Compruebe la separación entre la línea de centro (1) del original (a) y la línea de centro (2) del ejemplo de copia. Si queda una separación, ajústela siguiendo el siguiente procedimiento.
   <Valor de referencia>
   Diferencia horizontal de la línea de centro (2) para el copiado por una cara: ±2,0 mm
   Diferencia horizontal de la línea de centro (2) para el copiado dúplex: ±3,0 mm
2. Para ajustar la línea central utilice el modo de mantenimiento U072.
   Front: ajusta la línea central (anverso).
   Back: ajusta la línea central (reverso).

[Überprüfen der Mittellinie]

1. Den Abstand zwischen der Mittellinie (1) des Originals (a) und der Mittellinie (2) des Kopierbeispiels prüfen. Falls ein Abstand zu sehen ist, justieren Sie diesen durch die folgende Vorgehensweise.
   <Bezugswert>
   Horizontaler Unterschied der Mittellinie (2) für die Einzelkopie: ±2,0 mm
   Horizontaler Unterschied der Mittellinie (2) für die Duplexkopie: ±3,0 mm
2. Zum Einstellen der Mittellinie den Wartungsmodus U072 verwenden.
   Front: Zur Einstellung der Mittellinie (Oberfläche)
   Back: Zur Einstellung der Mittellinie (Rückseite)

[Controllo della linea centrale]

1. Verificare lo scostamento fra la linea centrale (1) sull'originale (a) e la linea centrale (2) dell'esempio di copia. Se vi è uno scostamento, regolarlo attenendosi alla seguente procedura.
   <Valore di riferimento>
   Differenza orizzontale della linea centrale (2) per la copia singola: ±2,0 mm
   Differenza orizzontale della linea centrale (2) per la copia duplex: ±3,0 mm
2. Usare la modalità di manutenzione U072 per regolare la linea centrale.
   Front: Regola la linea centrale (superficie)
   Back: Regola la linea centrale (lato posteriore)

[确认中心线]

1. 确认原稿（a）中心线（1）和复印样本中心线（2）之间的偏移值。如有偏移，请按下面的步骤来调整。
   〈 标准值 〉单面复印时，中心线（2）的左右偏移值 ：±2.0㎜ 以内
   双面复印时，中心线（2）的左右偏移值 ：±3.0㎜ 以内
2. 使用维修模式 U072 调整中心线。
   Front ：中心位置（正面）的调整
   Back ：中心位置（反面）的调整

[센터 라인 확인]

1. 원고 (a) 센터라인 (1) 과 벨크로 센터라인 (2) 의 차이를 확인합니다 . 차이가 있는 경우 , 다음 과정을 통하여 차이를 조정합니다 .
   <기준치>단면의 경우 센터라인 (2) 의 좌우차이:±2.0mm 이내
   양면의 경우 센터라인 (2) 의 좌우차이:±3.0mm 이내
2. 메인터넌스 모드 U072 을 세트하고 조정을 합니다 .
   Front:센터 위치 (표면) 의 조정
   Back:센터 위치 (뒷면) 의 조정

[センターライン確認]

1. 原稿 (a) の中心線 (1) とコピーサンプルの中心線 (2) のずれを確認する。ずれがある場合、次の手順で調整を行う。
   <基準値>片面の場合、中心線 (2) の左右ずれ:±2.0㎜ 以内
   両面の場合、中心線 (2) の左右ずれ:±3.0㎜ 以内
2. メンテナンスモード U072 をセットし、調整を行う。
   Front:センター位置(表面)の調整
   Back:センター位置(裏面)の調整

TONER

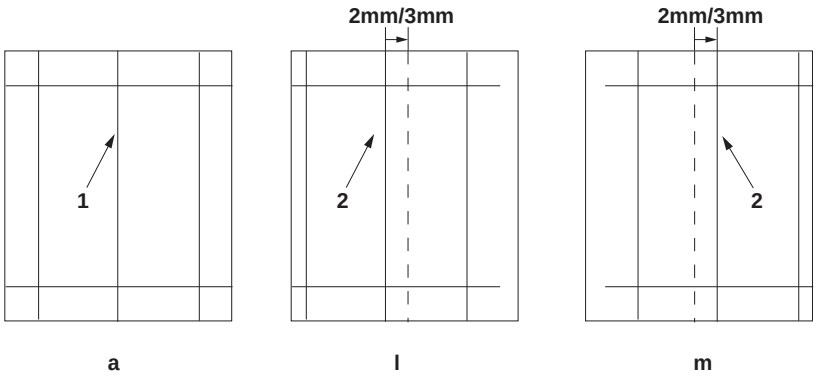

3. Adjust the values up and down by using "Zoom" key and "Paper Selection" key.
If the center moves more front, copy example (l): Decreases the value.
If the center moves inner, copy sample (m): Increas the value.
Amount of change per step: 0.085 mm
4. Perform a test copy.

5. Repeat the steps 2 to 4 above until the gap of line (2) of copy example shows the reference value.
<Reference value>
Horizontal difference of center line (2) for the single copying: ±2.0 mm
Horizontal difference of center line (2) for the duplex copying: ±3.0 mm

---

3. Augmentez ou diminuer les valeurs en utilisant la touche " Zoom " et la touche " Sélection du papier ".
Pour l'exemple de copie (l) dont l'axe se déplace davantage vers l'avant : diminuer la valeur.
Pour l'exemple de copie (m) dont l'axe se déplace vers l'intérieur : augmenter la valeur.
Changement par graduation d'échelle : 0,085 mm
4. Effectuer une copie de test.

5. Répéter les étapes 2 à 4 jusqu'à ce que l'écart de la ligne (2) de l'exemple de copie indique la valeur de référence.
<Valeur de référence>
Différence horizontale de l'axe (2) pour la copie recto : ±2,0 mm
Différence horizontale de l'axe (2) pour la copie recto-verso : ±3,0 mm

---

3. Ajuste los valores arriba y abajo con la tecla "Zoom" y la tecla "Selección de papel".
Si el centro se desplaza más hacia el frente, ejemplo de copia (l): disminuye el valor.
Si el centro se desplaza hacia dentro, ejemplo de copia (m): aumentadisel valor.
Magnitud del cambio por incremento: 0,085 mm
4. Haga una copia de prueba.

5. Repita los pasos 2 a 4 anteriores hasta que la separación de la línea (2) del ejemplo de copia presente el valor de referencia.
<Valor de referencia>
Diferencia horizontal de la línea de centro (2) para el copiado por una cara: ±2,0 mm
Diferencia horizontal de la línea de centro (2) para el copiado dúplex: ±3,0 mm

---

3. Stellen Sie die Werte über die Tasten "Zoom" und "Papierauswahl" ein.
Wenn die Mitte nach vorne verlagert ist, Kopierbeispiel (l): Den Wert verringern.
Wenn die Mitte nach innen verlagert ist, Kopierbeispiel (m): Den Wert erhöhe.
Änderung pro Schritt: 0,085 mm
4. Eine Testkopie erstellen.

5. Die Schritte 2 bis 4 wiederholen, bis der Abstand der Linie (2) des Kopierbeispiels den Bezugswert aufweist.
<Bezugswert>
Horizontaler Unterschied der Mittellinie (2) für die Einzelkopie: ±2,0 mm
Horizontaler Unterschied der Mittellinie (2) für die Duplexkopie: ±3,0 mm

---

3. Regolare i valori verso l'alto o verso il basso utilizzando il pulsante "Zoom" oppure il pulsante "Selezione carta".
Se il centro si sposta più avanti, esempio di copia (l): riduce il valore.
Se il centro si sposta verso l'interno, esempio di copia (m): aumenta il valore.
Entità modifica per passo: 0,085 mm
4. Eseguire una copia di prova

5. Ripetere le operazioni sopra descritte da 2 a 4 fino a quando lo scostamento della linea (2) dell'esempio di copia riporterà i valori di riferimento.
<Valore di riferimento>
Differenza orizzontale della linea centrale (2) per la copia singola: ±2,0 mm
Differenza orizzontale della linea centrale (2) per la copia duplex: ±3,0 mm

---

3. 使用〞缩小 / 放大〞键和〞纸张选择〞键来上下调整设定值。
当中心向前偏移时　复印样本（l）：调低设定值
当中心向内偏移时　复印样本（m）：调高设定值
设定值的一个调整单位变化量：0.085㎜
4. 进行测试复印。

5. 重复上述步骤 2 到 4，直至复印样本上的线（2）的偏移值达到标准值范围内。
〈标准值〉
单面复印时，中心线（2）的左右偏移值：±2.0㎜ 以内
双面复印时，中心线（2）的左右偏移值：±3.0㎜ 以内

---

3. " 축소 / 확대 " 키와 " 용지선택 " 키를 사용하여 값을 조정합니다 .
센터가 더 앞으로 이동한 경우의 샘플 카피 (l):설정치를 높입니다 .
센터가 더 안쪽으로 이동한 경우의 샘플 카피 (m) : 설정치를 내립니다 .
1 스텝당 변화량:0.085mm
4. 벨크로를 합니다 .

5. 벨크로 센터라인 (2) 차이가 기준치 내가 될 때까지 순서 2 ~ 4 를 반복합니다 .
＜기준치＞
단면의 경우 센터라인 (2) 의 좌우차이:±2.0mm 이내
양면의 경우 센터라인 (2) 의 좌우차이:±3.0mm 이내

---

3. " 拡大 " キーと " 用紙選択 " キーにより設定値を上下し調整する。
センターが手前にずれている場合コピーサンプル (l):設定値を下げる。
センターが奥にずれている場合コピーサンプル (m) 設定値を上げる。
1 ステップ当たりの変化量:0.085㎜
4. テストコピーを行う。

5. コピーサンプルの中心線 (2) ずれが基準値内になるまで手順 2 ～ 4 を繰り返す。
＜基準値＞
片面の場合、中心線 (2) の左右ずれ:±2.0㎜ 以内
両面の場合、中心線 (2) の左右ずれ:±3.0㎜ 以内

TONER

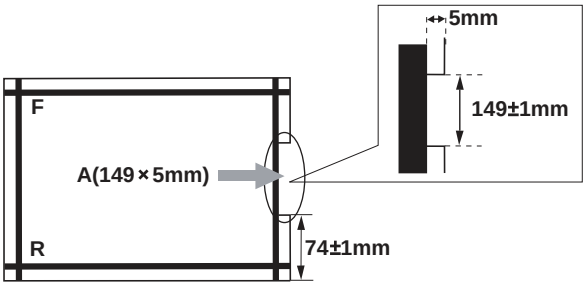

[Automatic adjustment using the original for adjustment]

1. Direct F and R of the DP auto adjustment original upward, and set the original from the place where F and R are marked
2. Set the maintenance mode U411, select [DP] and press the Start key to run adjustment.
3. If OK appears on the display, the adjustment is completed.
   If ERROR XX appears, the adjustment failed. Check the original set position and repeat steps 1 and 2 until OK appears.
   For details, see the service manual.

[Réglage automatique en utilisant l'original pour effectuer le réglage]

1. Diriger F (avant) et R (arrière) de la fonction de réglage automatique d'original du DP vers le haut, puis placer l'original à partir de l'emplacement des repères F et R.
2. Passez en mode maintenance U411, sélectionnez [DP] et appuyez sur la touche Départ pour lancer le réglage.
3. Si le message OK apparaît sur l'affichage, le réglage est terminé.Si le message ERROR XX (erreur XX) s'affiche, le réglage a échoué. Vérifier la position de l'original et recommencer les opérations 1 et 2 jusqu'à ce que le message OK apparaisse.
   Pour plus de details, se reporter au manuel d'entretien.

[Ajuste automático utilizando el original para el ajuste]

1. Dirija F y R del original de ajuste automático del DP hacia arriba, y coloque el original a partir del sitio en que están marcados F y R.
2. Configure el modo de mantenimiento U411, seleccione [DP] y pulse la tecla Inicio para ejecutar el ajuste.
3. Si aparece OK en la pantalla significa que el ajuste ha sido realizado. Si aparece ERROR XX, el ajuste ha fallado. Compruebe la posición ajustada del original y repita los pasos 1 y 2 hasta que aparezca OK en la pantalla.
   Para mas detalles, lea el manual de servicio.

[Automatische Einstellung mithilfe des Originals]

1. F und R der automatischen Einstellung des Originals des DP nach oben zeigen und das Original an die mit F und R markierte Stelle setzen.
2. Aktivieren Sie den U-Parameter U411. Wählen Sie [DP] und drücken Sie die Start-Taste, um die Justierung zu starten.
3. Wenn am Display OK angezeigt wird, ist die Einstellung abgeschlossen. Wenn ERROR XX (FEHLER XX) angezeigt wird, ist die Einstellung fehlgeschlagen. Überprüfen Sie die Originalpositionierung und wiederholen Sie Schritte 1 und 2, bis OK angezeigt wird.
   Weitere Einzelheiten siehe Wartungsanleitung.

[Regolazione automatica eseguita con l'originale]

1. Orientare F e R dell'autoregolazione originale DP verso l'alto e disporre l'originale rispetto ai punti in cui sono contrassegnati F e R.
2. Accedere al modo manutenzione U411, selezionare [DP], quindi premere il tasto Avvio per avviare la regolazione.
3. Se OK appare sul display, la regolazione è completata.Se compare ERROR XX (ERRORE XX), la regolazione non è riuscita. Verificare la posizione di impostazione dell'originale e ripetere le operazioni 1 e 2 fino a quando appare OK.
   Per ulteriori dettagli leggere il manuale d'istruzioni.

[通过调整用原稿进行自动调整]

1. 将 DP 自动调整原稿的 F 和 R 向上，并把标有 F 和 R 的一侧插入 DP 来设定原稿。
2. 进入维修保养模式 U411，选择 [DP] 后，再按开始键来实施调整。
3. 如果屏幕上出现 OK（完成），则表示调整完成。
   如果出现 ERROR XX（错误 XX），则表示调整失败。检查原稿设定位置并重复步骤 1 和 2，直到 OK（完成）出现。
   详细内容请参照维修手册。

[조정용 원고를 이용한 자동조정]

1. DP 자동 조정 원고를 F, R 을 위로 향하게 하고 F, R 이라고 표시된 곳에서 부터 원고를 셋팅합니다 .
2. 메인터넌스 모드 U411 을 설정하고 [DP] 를 선택한 후 시작 키를 눌러 조정을 실행합니다 .
3. 디스플레이에 OK 가 표시되면 조정완료가 됩니다 .
   ERROR XX 가 표시된 경우에는 조정실패입니다 . 원고 장착위치를 확인하고 OK 가 표시될 때까지 순서 1 ~ 2 를 반복합니다 .
   상세는 서비스 매뉴얼을 참조

[調整用原稿による自動調整]

1. DP 自動調整原稿の F、R を上に向け、F、R が書かれている方から DP へセットする。
2. メンテナンスモード U411 をセットし、[DP] を選択しスタートキーを押し、自動調整を行う。
3. ディスプレイに OK が表示されれば調整完了となる。
   ERROR XX が表示された場合は調整失敗である。原稿のセット位置を確認し、OK が表示されるまで手順 1 ～ 2 を繰り返す
   詳細はサービスマニュアルを参照のこと。

TONER
www.tonerplus.com.ua

PF-480 (300-sheet Paper feeder)

Installation Guide

TONER+
www.tonerplus.com.ua

INSTALLATION GUIDE

GUIDE D’INSTALLATION

GUÍA DE INSTALACION

INSTALLATIONSANLEITUNG

GUIDA ALL’INSTALLAZIONE

安装手册

설치안내서

設置手順書

PF-480

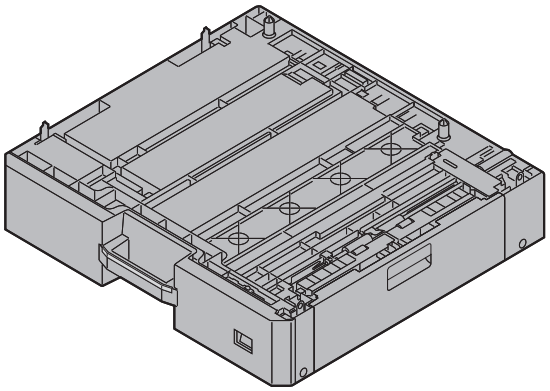

TONER
www.tonerplus.com.ua

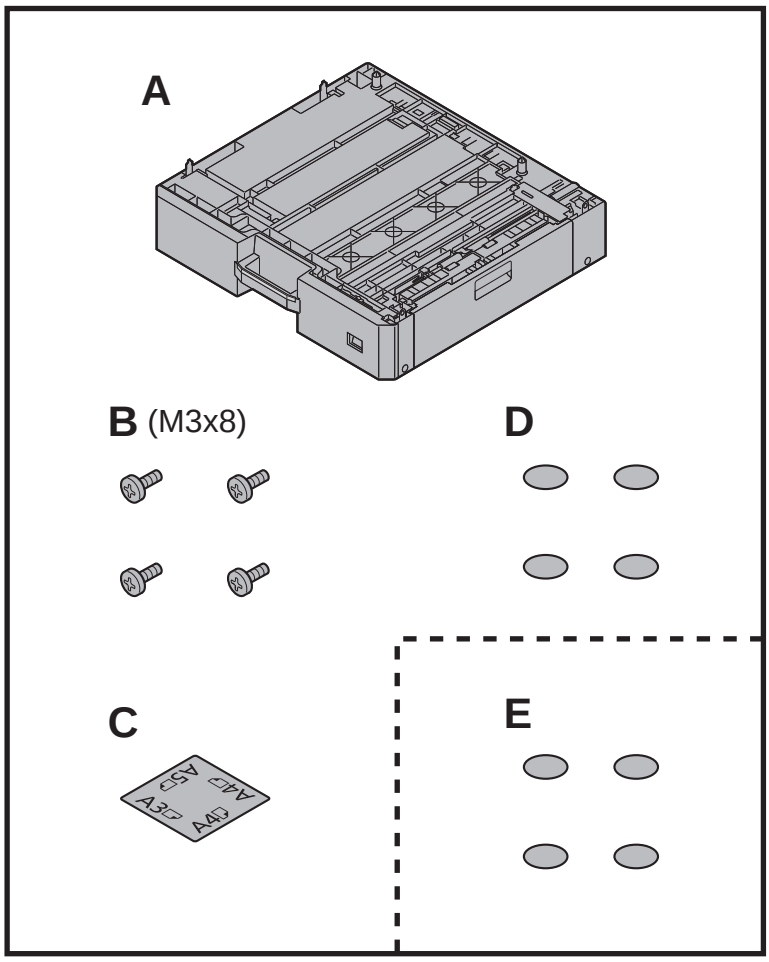

EN (E) is supplied with the machine.

FR (E) est fourni avec la machine.

ES (E) se proporciona con la máquina.

DE (E) wird mit dem Gerät mitgeliefert.

IT (E) viene fornito con la macchina.

CN (E) 是机器的附属品。

KR (E)는 본체와 함께 제공됩니다.

JP (E) は機械本体に同梱されています。

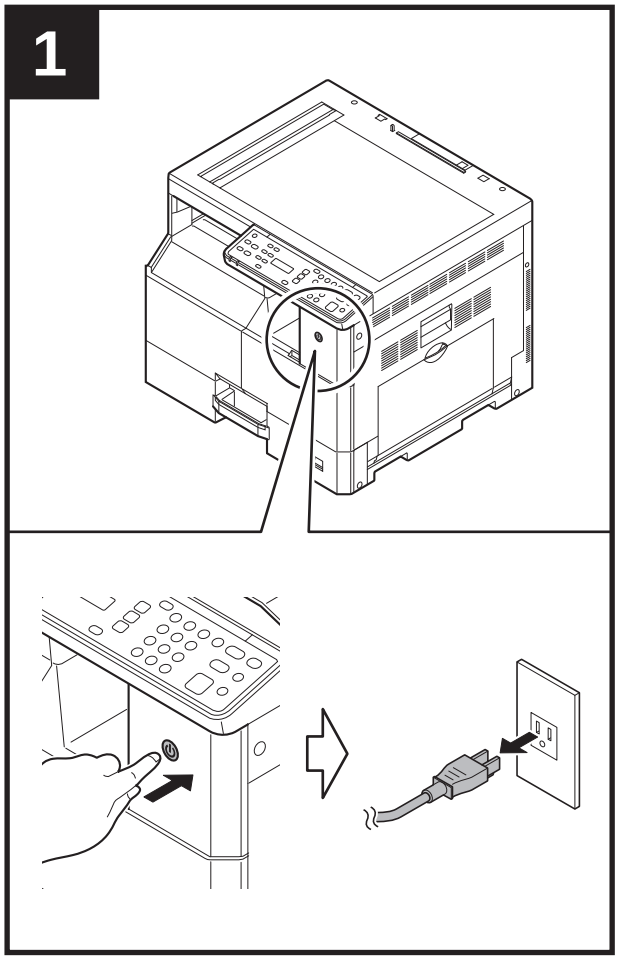

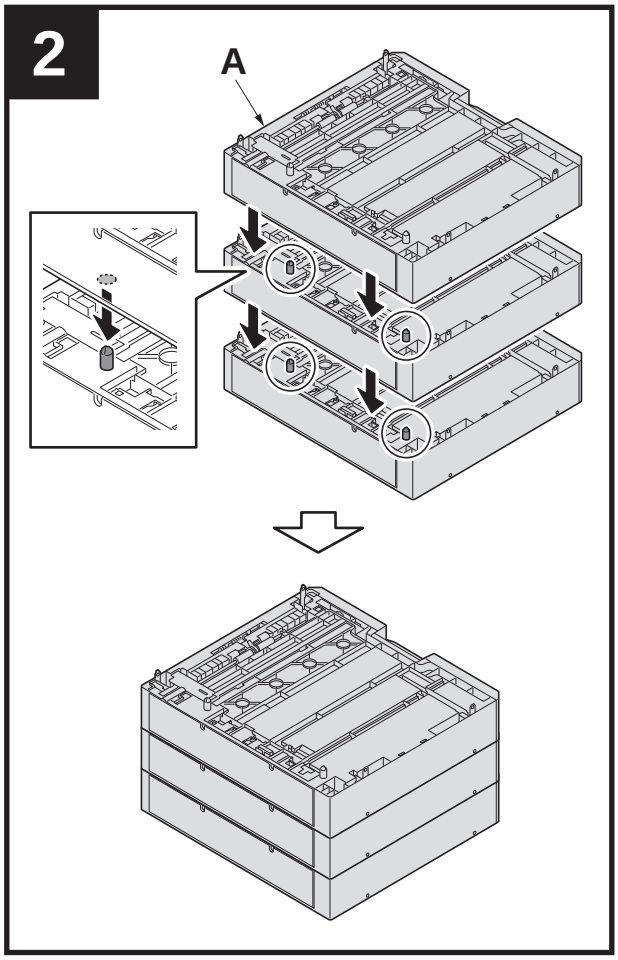

3

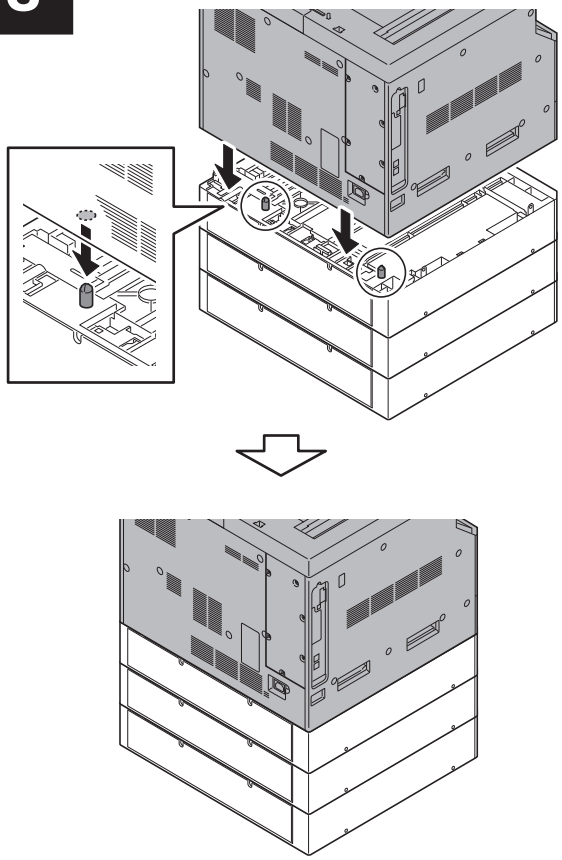

4

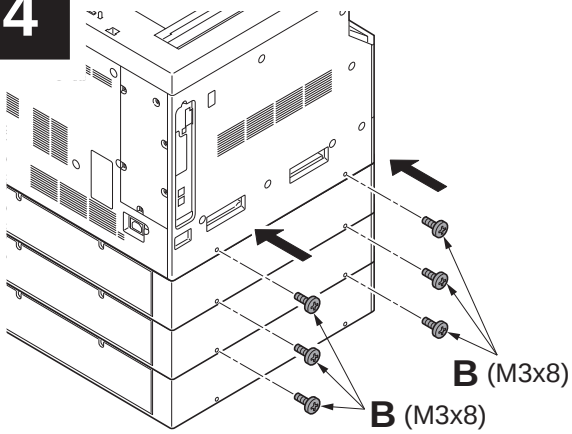

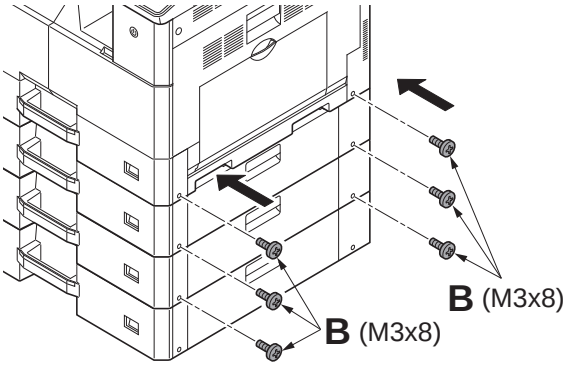

5

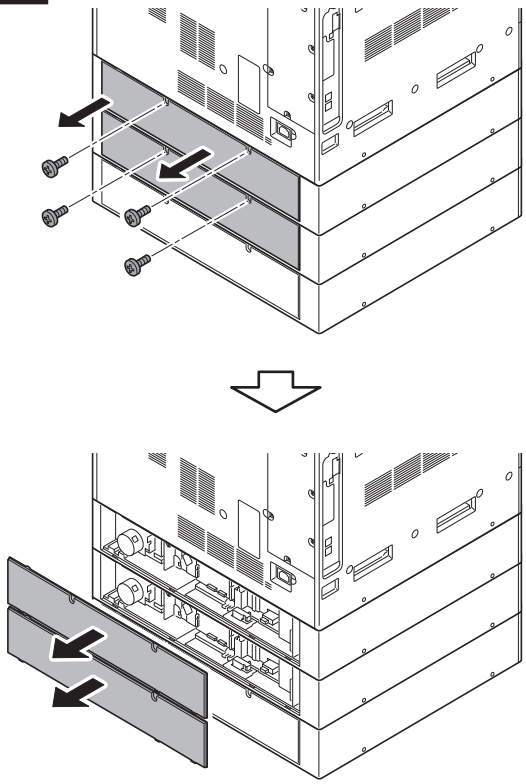

6

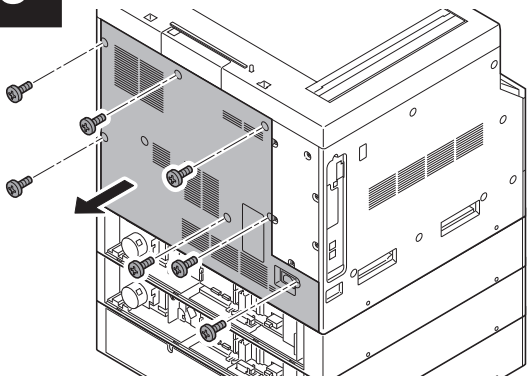

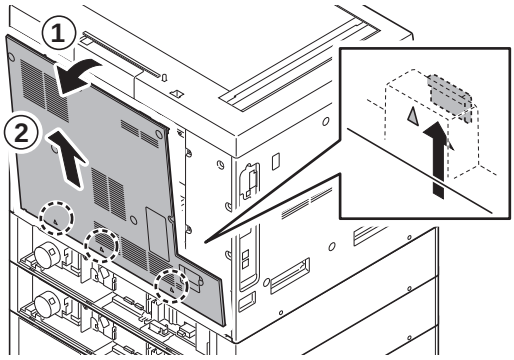

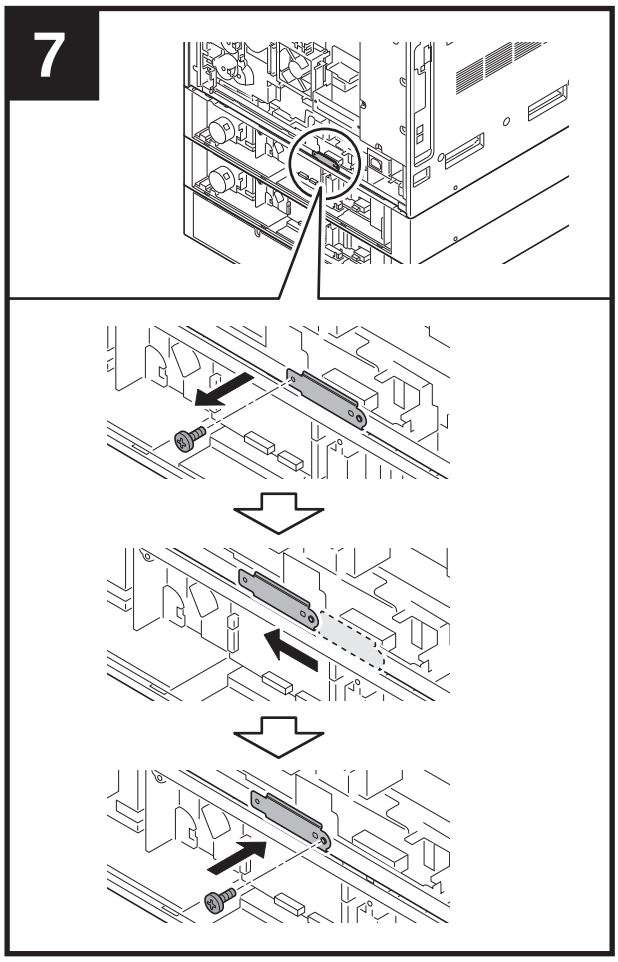
7

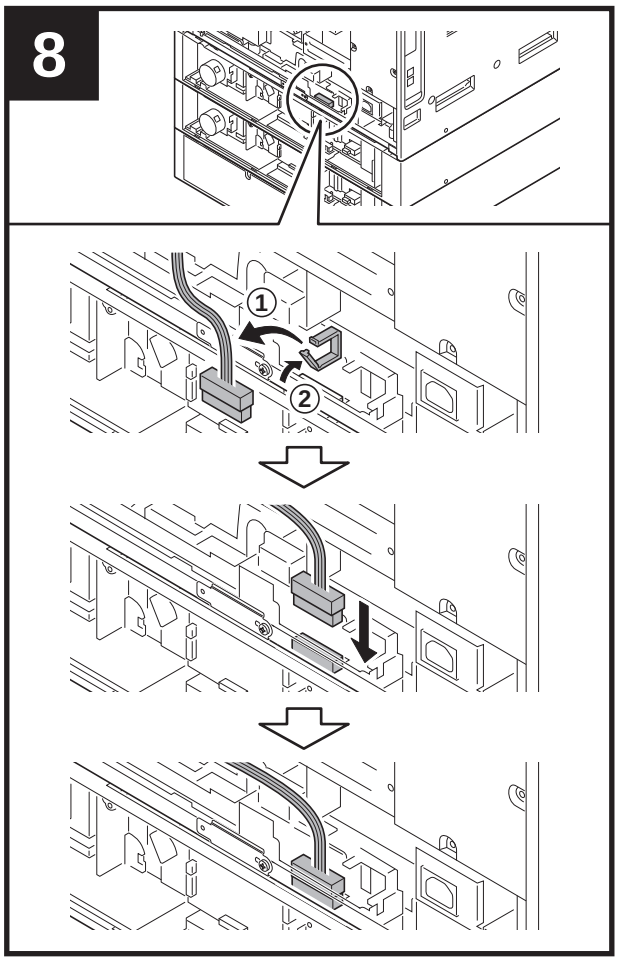
8
1
2

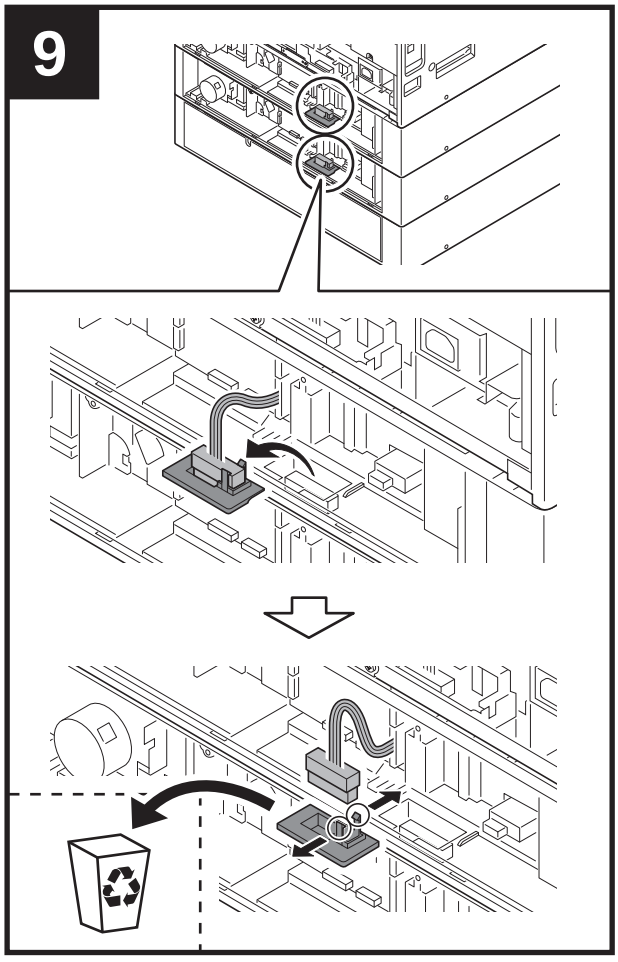
9

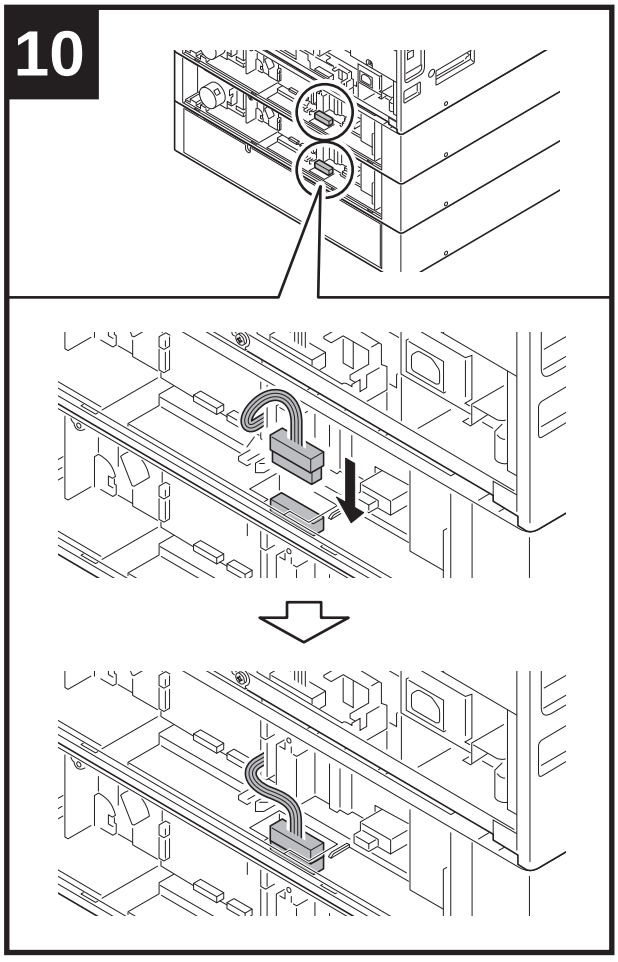
10

11

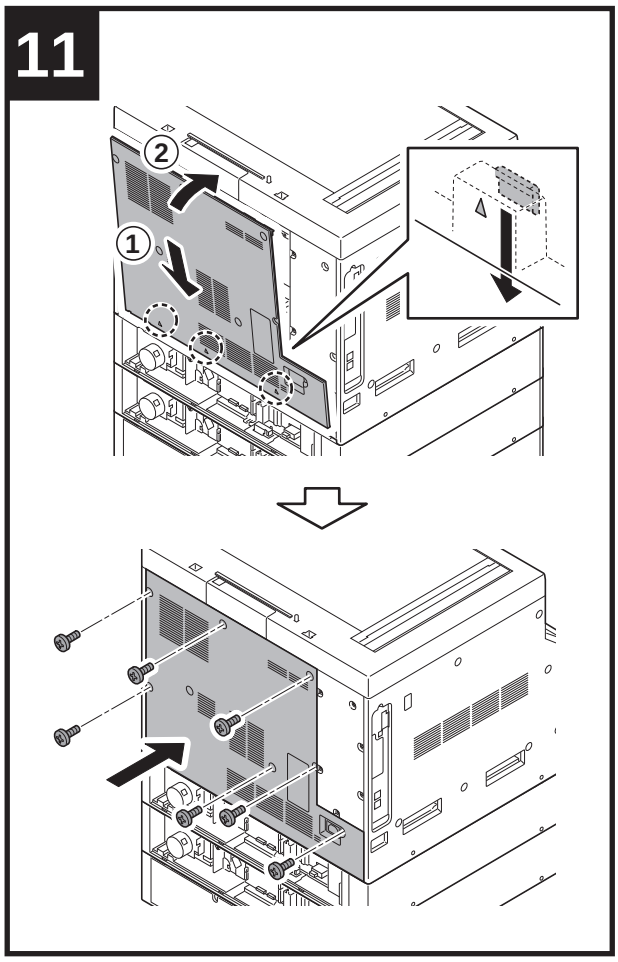

12

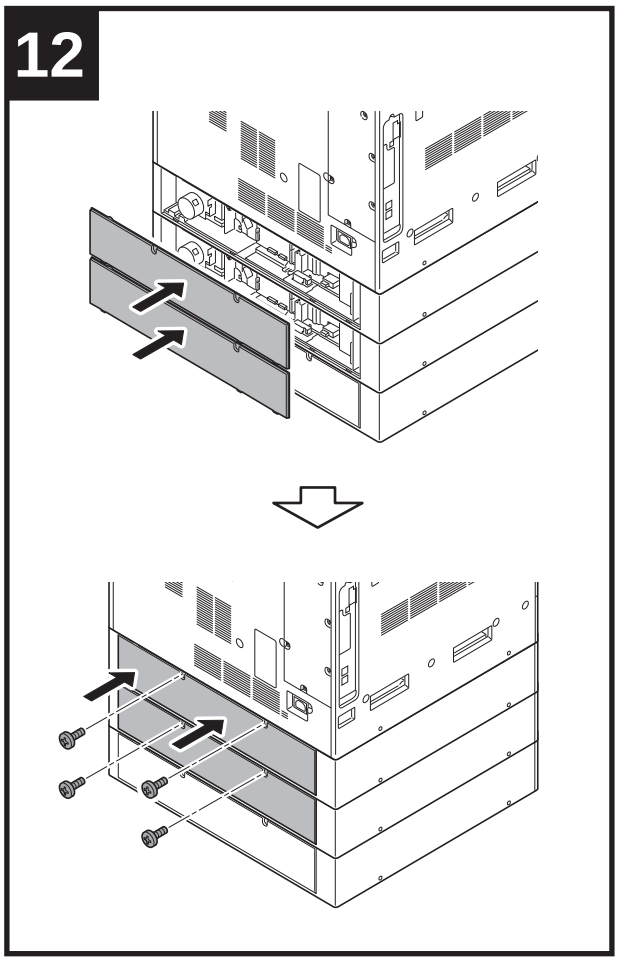

13

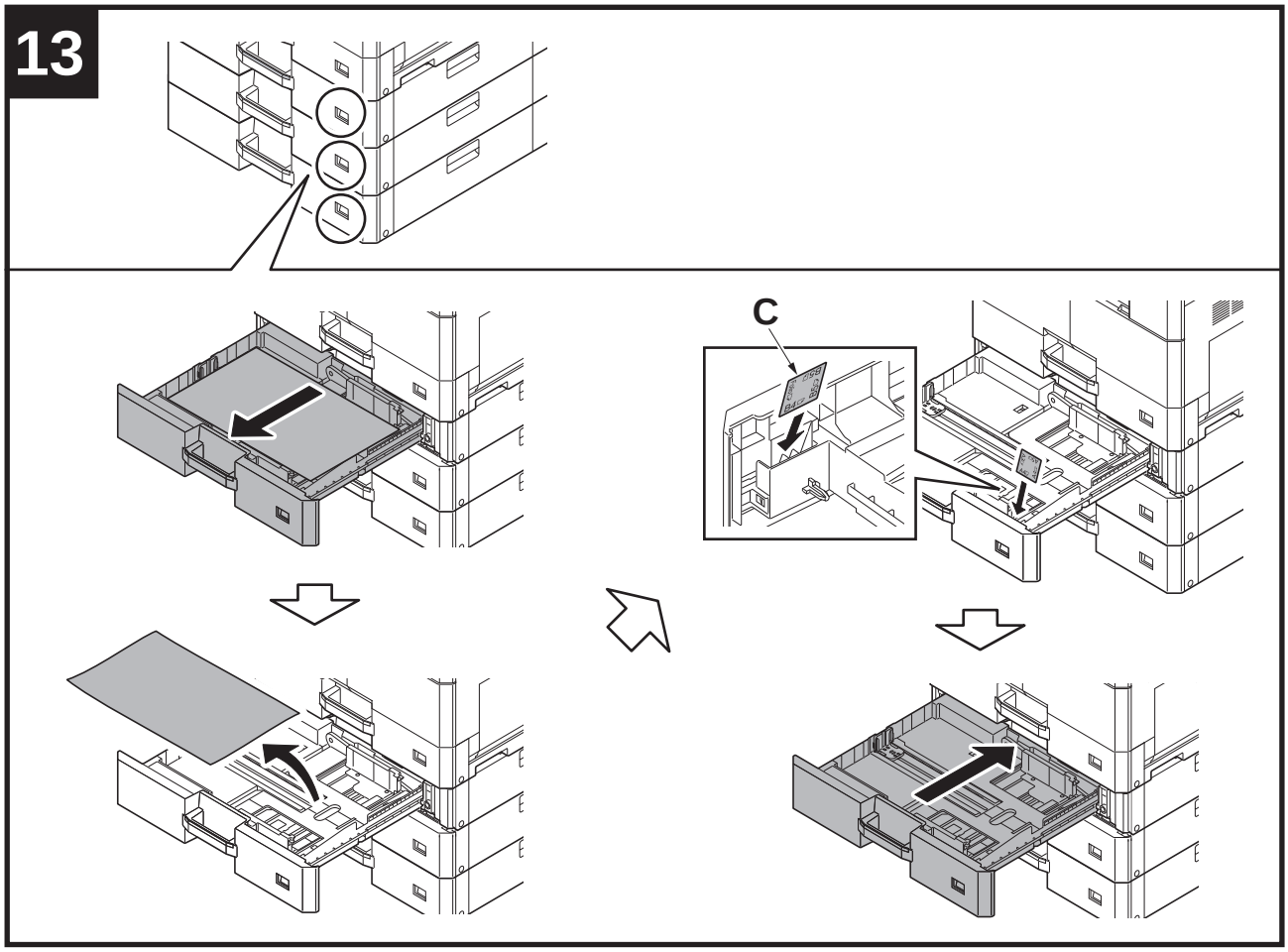

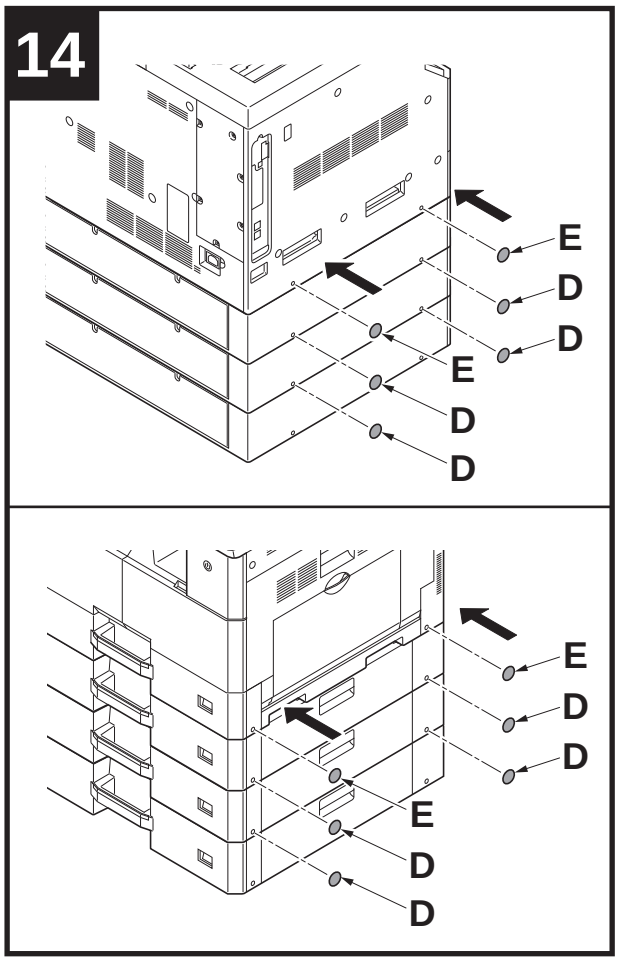
14
E
D
D
E
D
D
E
D
D
E
D
D

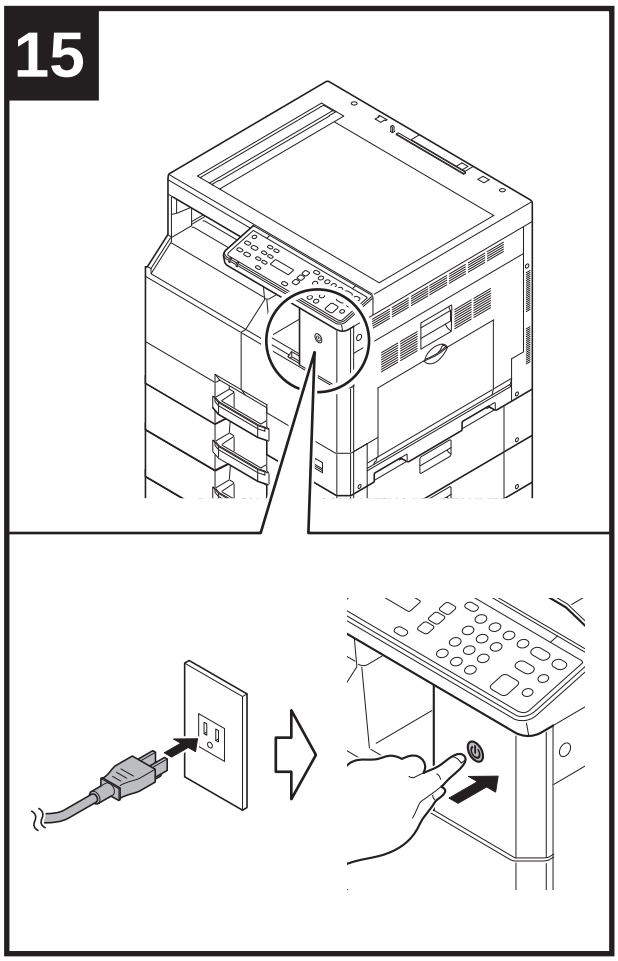
15

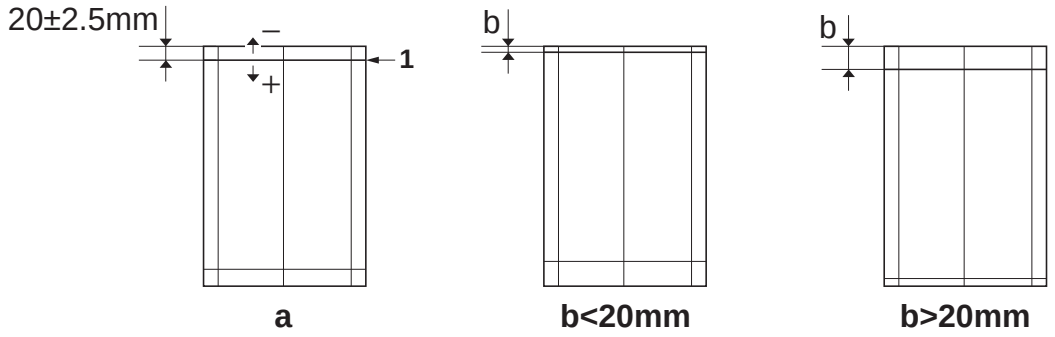

Adjusting the leading edge timing

The reference value for the leading edge timing is 20 ±2.5 mm at position (1) in the sample image (a). If the timing is outside this range, perform the following adjustment.

1. Set maintenance mode U034, select [LSU Out Top] and [Cas2], [Cas3] or [Cas4].
2. Adjust the values.
b<20mm : Increase the setting value. b>20mm : Decrease the setting value.
3. Press the Start key to confirm the setting value.

Réglage de la synchronisation du bord de tête

La valeur de référence pour la synchronisation du bord de tête est de 20 ±2,5 mm à la position (1) sur l'image d'exemple (a).Si la synchronisation est hors de cette plage, procéder au réglage suivant.

1. Passer au mode maintenance U034, sélectionner [LSU Out Top] et [Cas2], [Cas3] ou [Cas4].
2. Régler les valeurs.
b<20mm : Augmentez la valeur de réglage. b>20mm : Diminuez la valeur de réglage.
3. Appuyer sur la touche de Start pour confirmer la valeur de réglage.

Cómo ajustar la sincronización del borde superior

El valor de referencia para la sincronización del borde anterior es 20 ±2,5 mm en la posición (1) en la imagen de muestra (a). Si la sincronización estuviera fuera de este rango, haga el siguiente ajuste.

1. Entre al modo mantenimiento U034, seleccione [LSU Out Top] y [Cas2], [Cas3] o [Cas4].
2. Ajuste los valores.
b<20mm : Aumente el valor de configuración. b>20mm : Reduzca el valor de configuración.
3. Pulse la tecla de Start para confirmar el valor de configuración.

Einstellen des Vorderkanten-Timing

Der Bezugswert des Vorderkantenabstands beträgt 20 ±2,5 mm an Position (1) des Beispieldokuments (a). Falls das Timing außerhalb dieses Bereichs liegt, ist folgende Einstellung vorzunehmen.

1. Schalten Sie in den Wartungsmodus U034, wählen Sie [LSU Out Top] und [Cas2], [Cas3] oder [Cas4].
2. Die Werte einstellen.
b<20mm : Den Einstellwert erhöhen. b>20mm : Den Einstellwert verringern.
3. Den Einstellwert durch Drücken der Start-Taste bestätigen.

Regolazione della sincronizzazione del bordo principale

Il valore di riferimento per la sincronizzazione del bordo superiore è pari a 20 ±2,5 mm sulla posizione (1) nell'immagine di esempio (a). Se la sincronizzazione è all'infuori di questa gamma, effettuare la regolazione seguente.

1. Impostare la modalità di manutenzione U034, selezionare [LSU Out Top] e [Cas2], [Cas3] o [Ca4].
2. Regolare i valori.
b<20mm : Aumentare il valore dell'impostazione. b>20mm Diminuire il valore dell'impostazione.
3. Premere il tasto di Start per confermare il valore dell'impostazione.

前端对位调节

前端对位的基准值在图像样张（a）的（1）位置为 20±2.5mm。 超出该范围时，须进行以下调节。

1. 设置维护模式 U034，选择 [LSU Out Top]、[Cas2]、[Cas3] 或 [Cas4]。
2. 调整设定值。
b<20mm：调高设定值。 b>20mm ：调低设定值。
3. 按 Start 键，以确定设定值。

선단 타이밍 조정

선단 타이밍은 샘플화상 (a) 의 (1) 위치에서 기준치는 20±2.5mm. 여기에서 벗어나는 것은 이하의 조정을 합니다 .

1. 메인터넌스 모드 U034 을 세트하고 [LSU Out Top], [Cas2], [Cas3] 또는 [Cas4] 을 선택합니다 .
2. 설정치를 조정합니다 .
b<20mm :설정치를 높입니다 . b>20mm :설정치를 내립니다 .
3. 시작키를 누르고 설정치를 확인합니다 .

先端タイミング調整

先端タイミングは、サンプルイメージ (a) の (1) の位置で基準値は 20±2.5mm。これから外れるときは以下の調整をおこなう。

1. メンテナンスモード U034 をセットし、[LSU Out Top]、[Cas2]、[Cas3] または [Cas4] を選択する。
2. 設定値を調整する。
b<20mm :設定値を上げる。 b>20mm :設定値を下げる。
3. スタートキーを押し、設定値を確定する。

TONER
www.toner.com

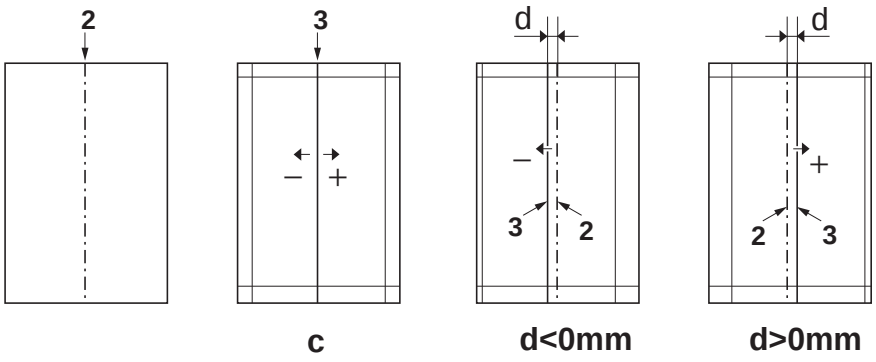

Adjusting the center line

The reference value for the center line(2) is ±2.0 mm or less at position (3) in the sample image (c). If the center line position is outside this range, perform the following adjustment.

1. Set maintenance mode U034, select [LSU Out Left] and [Cas2], [Cas3] or [Cas4].
2. Adjust the values.
d<0mm : Increase the setting value. d>0mm : Decrease the setting value.
3. Press the Start key to confirm the setting value.

Réglage de l'axe

La valeur de référence pour l'axe (2) est de ±2,0 mm ou moins à la position (3) sur l'image d'exemple (c). Si la position de l'axe est hors de cette plage, effectuez le réglage suivant.

1. Passer au mode maintenance U034, sélectionner [LSU Out Left] et [Cas2], [Cas3] ou [Cas4].
2. Régler les valeurs.
d<0mm : Augmentez la valeur de réglage. d>0mm : Diminuez la valeur de réglage.
3. Appuyer sur la touche de Start pour confirmer la valeur de réglage.

Ajuste de la línea central

El valor de referencia para la línea central (2) es ±2,0 mm o menos en la posición (3) en la imagen de muestra (c). Si la posición de la línea central estuviera fuera de este rango, haga el siguiente ajuste.

1. Entre al modo mantenimiento U034, seleccione [LSU Out Left] y [Cas2], [Cas3] o [Cas4].
2. Ajuste los valores.
d<0mm : Aumente el valor de configuración. d>0mm : Reduzca el valor de configuración.
3. Pulse la tecla de Start para confirmar el valor de configuración.

Einstellen der Mittenlinie

Der Bezugswert der Mittellinie (2) beträgt ±2,0 mm oder weniger an Position (3) des Beispieldokuments (c). Falls die Mittenlinie außerhalb dieses Bereichs liegt, ist folgende Einstellung vorzunehmen.

1. Schalten Sie in den Wartungsmodus U034, wählen Sie [LSU Out Left] und [Cas2], [Cas3] oder [Cas4].
2. Die Werte einstellen.
d<0mm : Den Einstellwert erhöhen. d>0mm : Den Einstellwert verringern.
3. Den Einstellwert durch Drücken der Start-Taste bestätigen.

Regolazione della linea centrale

Il valore di riferimento per la linea centrale (2) è pari a ±2,0 mm o inferiore sulla posizione (3) nell'immagine di esempio (c). Se la posizione della linea centrale è all'infuori di questa gamma, effettuare la regolazione seguente.

1. Impostare la modalità di manutenzione U034, selezionare [LSU Out Left] e [Cas2], [Cas3] o [Cas4].
2. Regolare i valori.
d<0mm : Aumentare il valore dell'impostazione. d>0mm : Diminuire il valore dell'impostazione.
3. Premere il tasto di Start per confermare il valore dell'impostazione.

中心线调节

中心线的基准值在图像样张（c）的（3），基准值是纸张中线位置（2）两端 ±2.0mm 以内。超出该范围时，须进行以下调节。

1. 设置维护模式 U034，选择 [LSU Out Left]、[Cas2]、[Cas3] 或 [Cas4]。
2. 调整设定值。
d<0mm：调高设定值。 d>0mm ：调低设定值。
3. 按 Start 键，以确定设定值。

센터라인 조정

센터라인 (2) 은 샘플화상 (c) 의 (3) 위치에서 기준치는 ±2.0mm 이내 . 여기에서 벗어나는 것은 이하의 조정을 합니다 .

1. 메인터넌스 모드 U034 을 세트하고 [LSU Out Left], [Cas2], [Cas3] 또는 [Cas4] 을 선택합니다 .
2. 설정치를 조정합니다 .
d<0mm:설정치를 높입니다 . d>0mm :설정치를 내립니다 .
3. 시작키를 누르고 설정치를 확인합니다 .

センターライン調整

センターラインは、サンプルイメージ (c) の (3) の位置で、基準値は紙のセンター(2) から ±2.0mm 以内。これから外れるときは以下の調整をおこなう。

1. メンテナンスモード U034 をセットし、[LSU Out Left]、[Cas2], [Cas3] または [Cas4] を選択する。
2. 設定値を調整する。
d<0mm :設定値を上げる。d>0mm :設定値を下げる。
3. スタートキーを押し、設定値を確定する。

TONER
www.tonerkopen.nl

DU-480 (duplex unit)

Installation Guide

TONER
www.tonerplus.com.ua

INSTALLATION GUIDE

GUIDE D’INSTALLATION

GUÍA DE INSTALACION

INSTALLATIONSANLEITUNG

GUIDA ALL’INSTALLAZIONE

安装手册

설치안내서

設置手順書

DU-480

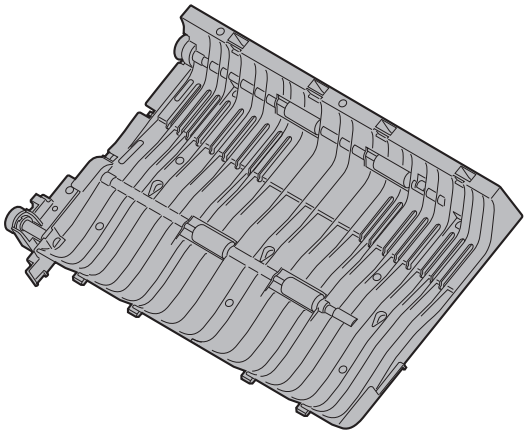

TONER
www.tonerplus.com.ua

A

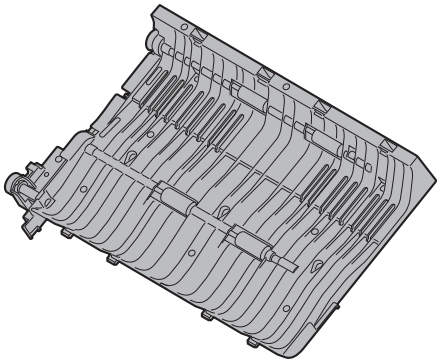

B (M3x8)

1

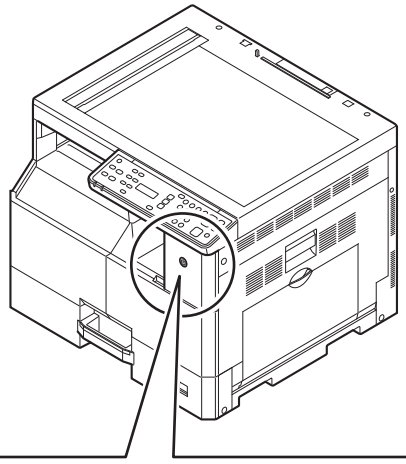

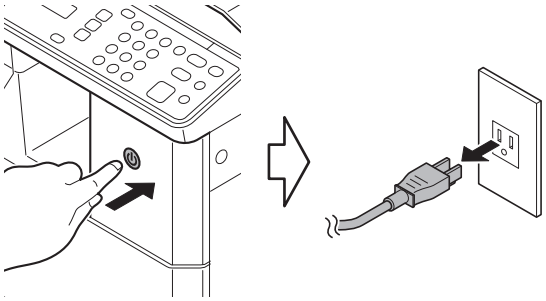

2

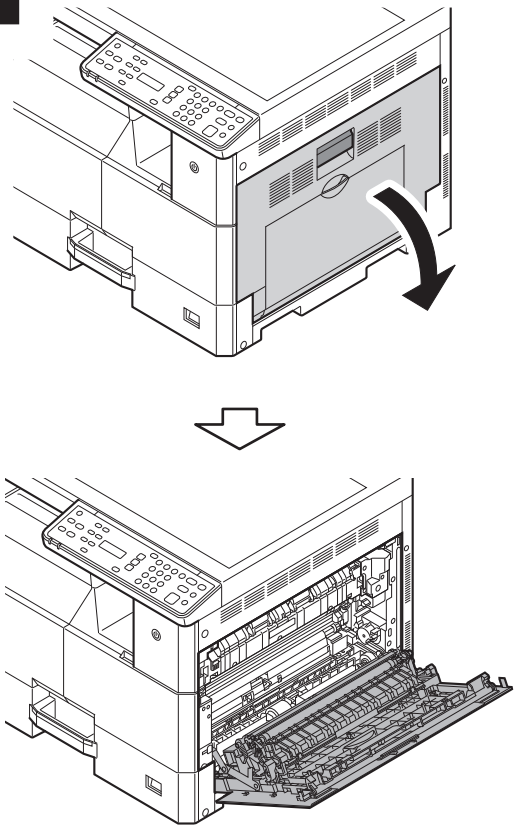

3

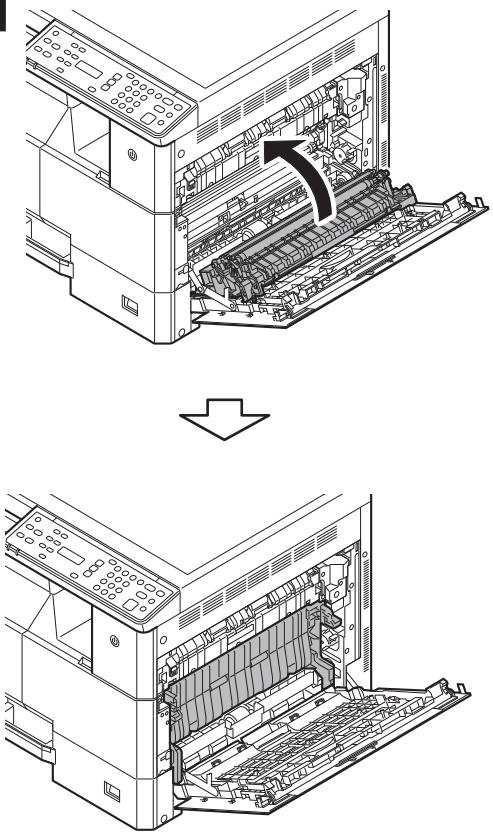

4

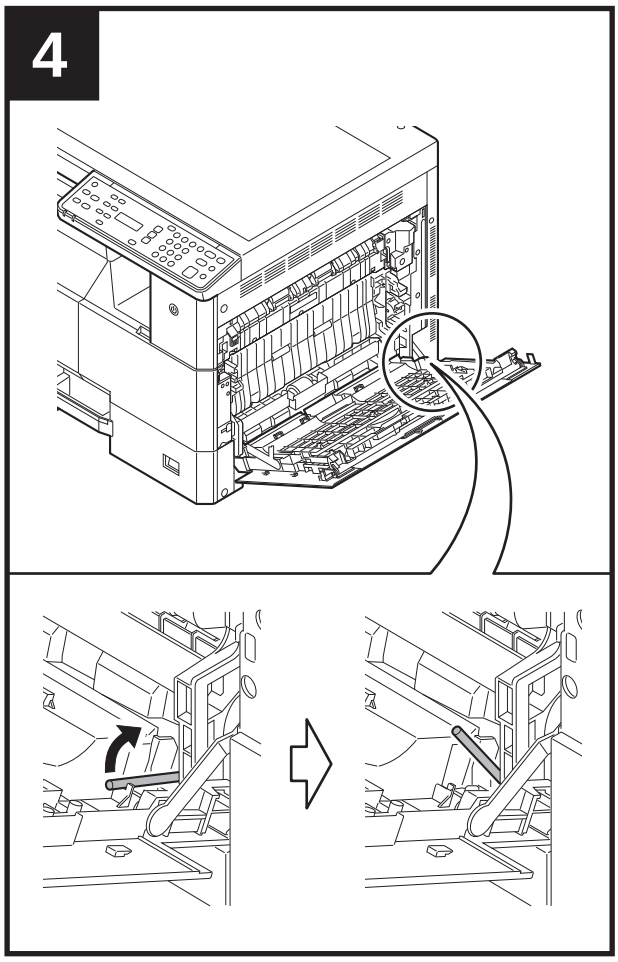

5

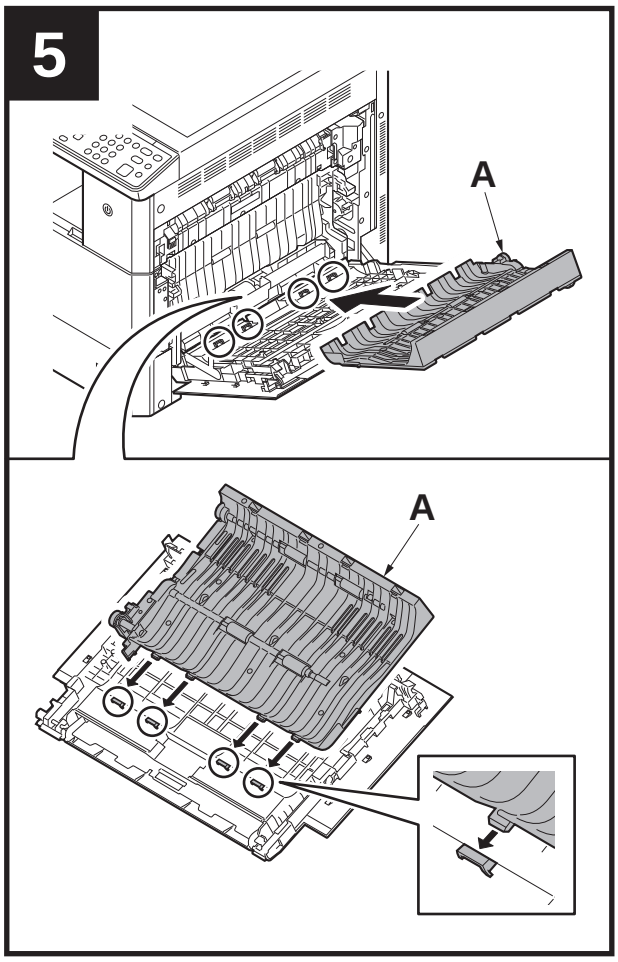

6

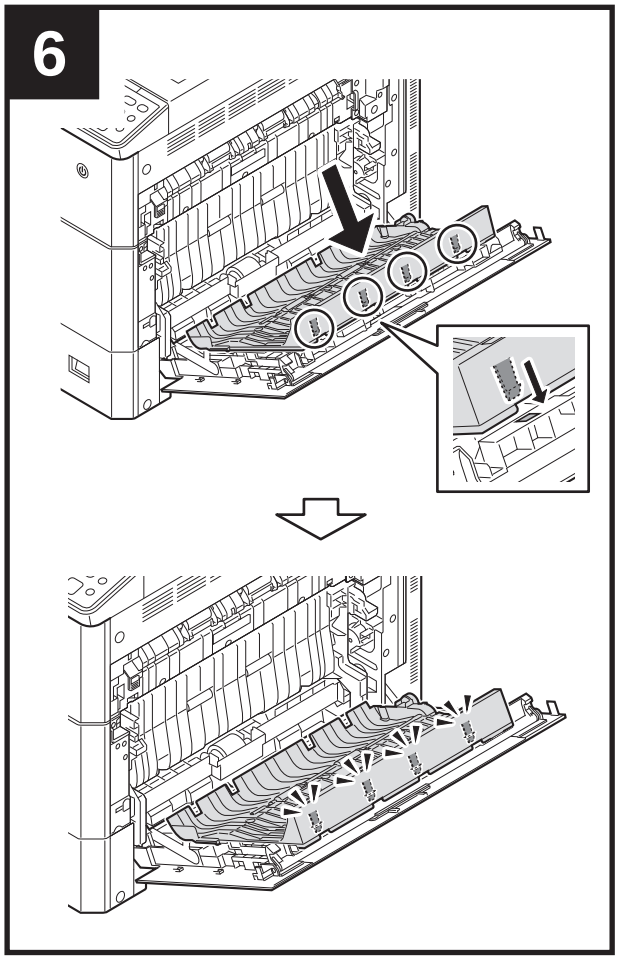

7

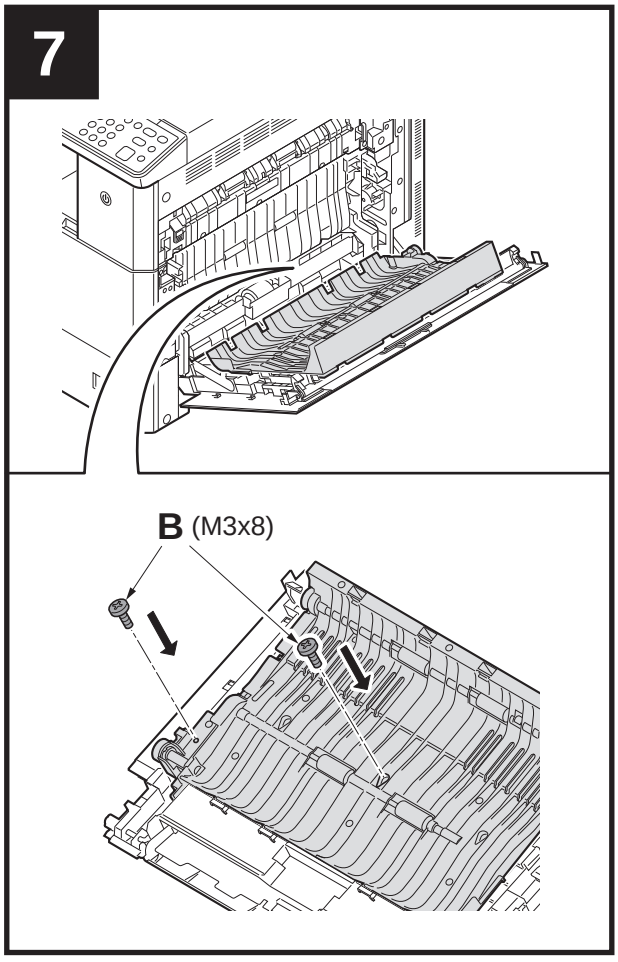

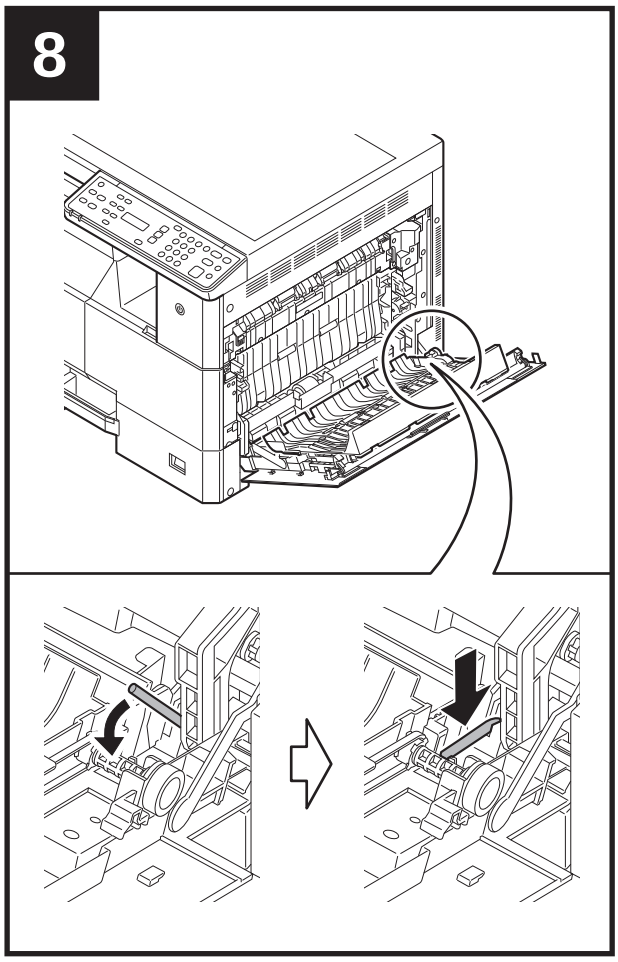

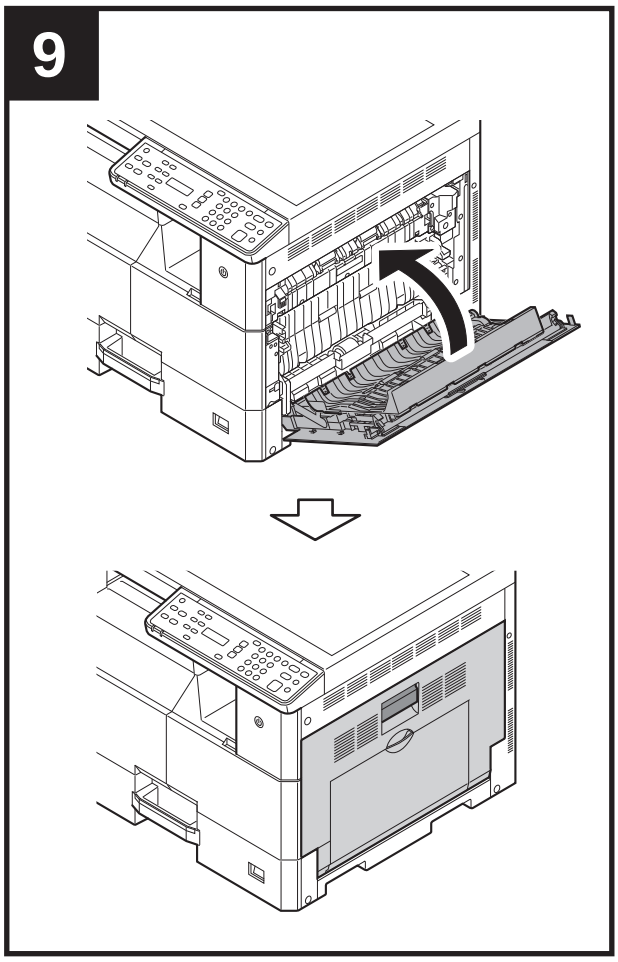

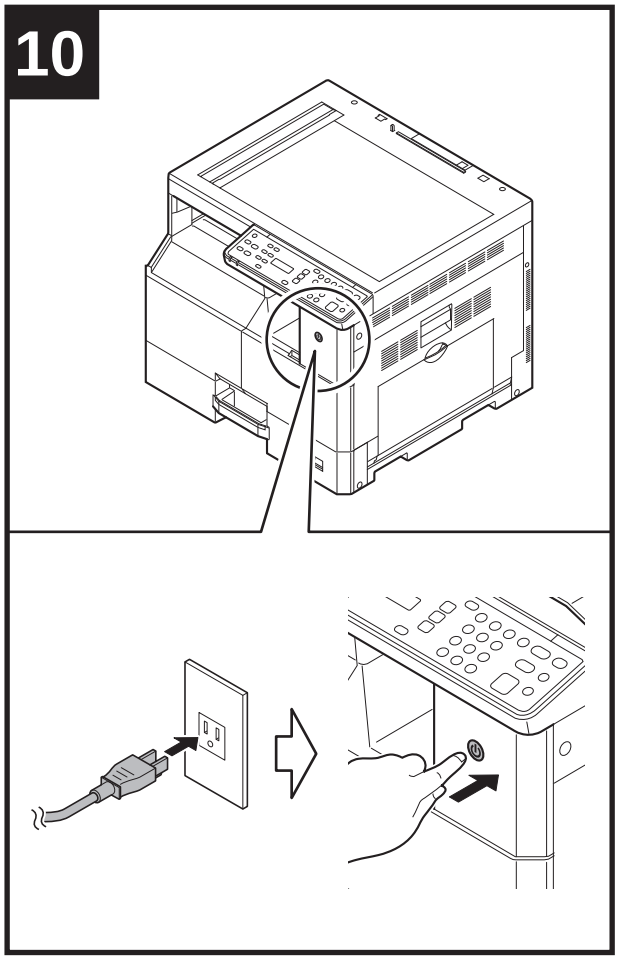

EN

Set the maintenance mode U211 [Set EH connection], and set [Duplex Unit].

FR

Passez en mode maintenance U211 [Set EH connection] (Paramétrer connexion EH) et paramétrer [Duplex Unit].

ES

Configure el modo de mantenimiento U211 [Set EH connection] (Configurar ajuste de EH) y configure [Duplex Unit] .

DE

Aktivieren Sie den U-Parameter U211 [Set EH connection] und [Duplex Unit].

IT

Accedere al modo manutenzione U211 [Set EH connection], e selezionare [Duplex Unit].

CN

进入维修保养模式U211，在[Set EH connection]中执行 [Duplex Unit]。

KR

메인터넌스 모드 U211 [EH 연결 설정]을 설정하고 [Duplex Unit]를 설정합니다.

JP

メンテナンスモードに入り、U211[エンハンス接続設定] にて、[Duplex Unit] を設定する。

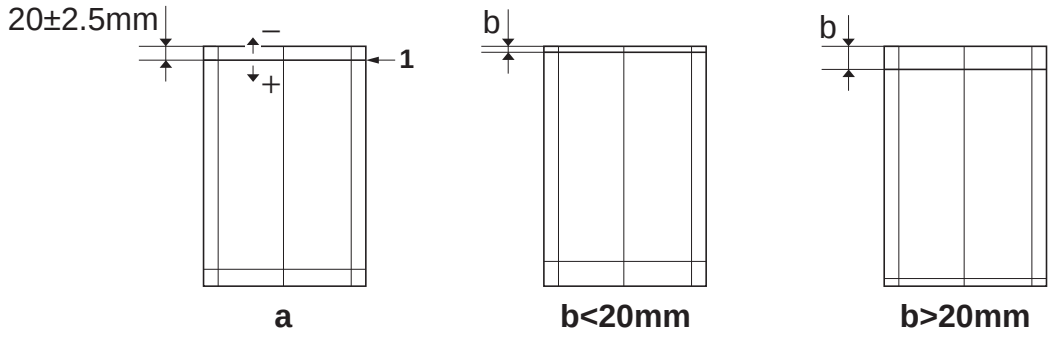

Adjusting the leading edge timing

The reference value for the leading edge timing is 20 ±2.5 mm at position (1) in the sample image (a). If the timing is outside this range, perform the following adjustment.

1. Set maintenance mode U034, select [LSU Out Top] and [Duplex].
2. Adjust the values.
b<20mm : Increase the setting value. b>20mm : Decrease the setting value.
3. Press the Start key to confirm the setting value.

Réglage de la synchronisation du bord de tête

La valeur de référence pour la synchronisation du bord de tête est de 20 ±2,5 mm à la position (1) sur l'image d'exemple (a).Si la synchronisation est hors de cette plage, procéder au réglage suivant.

1. Passer en mode maintenance U034, sélectionner [LSU Out Top] et [Duplex].
2. Régler les valeurs.
b<20mm : Augmentez la valeur de réglage. b>20mm : Diminuez la valeur de réglage.
3. Appuyer sur la touche de Start pour confirmer la valeur de réglage.

Cómo ajustar la sincronización del borde superior

El valor de referencia para la sincronización del borde anterior es 20 ±2,5 mm en la posición (1) en la imagen de muestra (a). Si la sincronización estuviera fuera de este rango, haga el siguiente ajuste.

1. Entre al modo de mantenimiento U034, seleccione [LSU Out Top] y [Duplex].
2. Ajuste los valores.
b<20mm : Aumente el valor de configuración. b>20mm : Reduzca el valor de configuración.
3. Pulse la tecla de Start para confirmar el valor de configuración.

Einstellen des Vorderkanten-Timing

Der Bezugswert des Vorderkantenabstands beträgt 20 ±2,5 mm an Position (1) des Beispieldokuments (a). Falls das Timing außerhalb dieses Bereichs liegt, ist folgende Einstellung vorzunehmen.

1. Schalten Sie in den Wartungsmodus U034, wählen Sie [LSU Out Top] und [Duplex].
2. Die Werte einstellen.
b<20mm : Den Einstellwert erhöhen. b>20mm : Den Einstellwert verringern.
3. Den Einstellwert durch Drücken der Start-Taste bestätigen.

Regolazione della sincronizzazione del bordo principale

Il valore di riferimento per la sincronizzazione del bordo superiore è pari a 20 ±2,5 mm sulla posizione (1) nell'immagine di esempio (a). Se la sincronizzazione è all'infuori di questa gamma, effettuare la regolazione seguente.

1. Impostare la modalità manutenzione U034, selezionare [LSU Out Top] e [Duplex].
2. Regolare i valori.
b<20mm : Aumentare il valore dell'impostazione. b>20mm Diminuire il valore dell'impostazione.
3. Premere il tasto di Start per confermare il valore dell'impostazione.

前端对位调节

前端对位的基准值在图像样张（a）的（1）位置为 20±2.5mm。 超出该范围时，须进行以下调节。

1. 设置维护模式 U034，选择 [LSU Out Top]、[Duplex]。
2. 调整设定值。
b<20mm：调高设定值。 b>20mm ：调低设定值。
3. 按 Start 键，以确定设定值。

선단 타이밍 조정

선단 타이밍은 샘플화상 (a) 의 (1) 위치에서 기준치는 20±2.5mm. 여기에서 벗어나는 것은 이하의 조정을 합니다 .

1. 메인터넌스 모드 U034 를 세트하고 [LSU Out Top], [Duplex] 을 선택합니다 .
2. 설정치를 조정합니다 .
b<20mm :설정치를 높입니다 . b>20mm :설정치를 내립니다 .
3. 시작키를 누르고 설정치를 확인합니다 .

先端タイミング調整

先端タイミングは、サンプルイメージ (a) の (1) の位置で基準値は 20±2.5mm。これから外れるときは以下の調整をおこなう。

1. メンテナンスモード U034 をセットし、[LSU Out Top]、[Duplex] を選択する。
2. 設定値を調整する。
b<20mm :設定値を上げる。 b>20mm :設定値を下げる。
3. スタートキーを押し、設定値を確定する。

TONER
www.toner.com

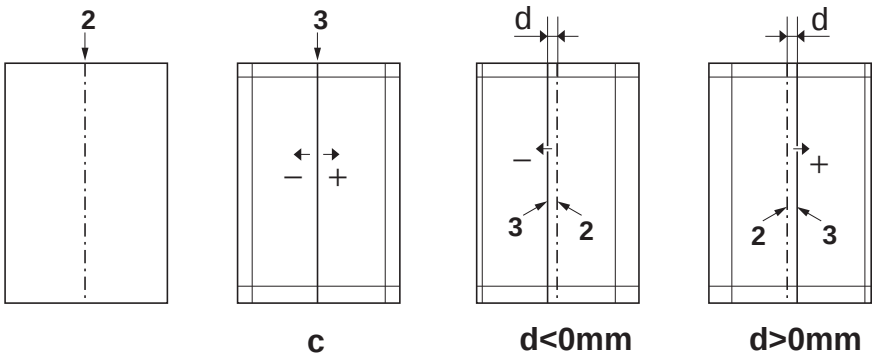

Adjusting the center line

The reference value for the center line(2) is ±3.0 mm or less at position (3) in the sample image (c). If the center line position is outside this range, perform the following adjustment.

1. Set maintenance mode U034, select [LSU Out Left] and [Duplex] .
2. Adjust the values.
   d<0mm : Increase the setting value. d>0mm : Decrease the setting value.
3. Press the Start key to confirm the setting value.

Réglage de l'axe

La valeur de référence pour l'axe (2) est de ±3,0 mm ou moins à la position (3) sur l'image d'exemple (c). Si la position de l'axe est hors de cette plage, effectuez le réglage suivant.

1. Passer en mode maintenance U034, sélectionner [LSU Out Left] et [Duplex] .
2. Régler les valeurs.
   d<0mm : Augmentez la valeur de réglage. d>0mm : Diminuez la valeur de réglage.
3. Appuyer sur la touche de Start pour confirmer la valeur de réglage.

Ajuste de la línea central

El valor de referencia para la línea central (2) es ±3,0 mm o menos en la posición (3) en la imagen de muestra (c). Si la posición de la línea central estuviera fuera de este rango, haga el siguiente ajuste.

1. Entre al modo de mantenimiento U034, seleccione [LSU Out Left] y [Duplex] .
2. Ajuste los valores.
   d<0mm : Aumente el valor de configuración. d>0mm : Reduzca el valor de configuración.
3. Pulse la tecla de Start para confirmar el valor de configuración.

Einstellen der Mittenlinie

Der Bezugswert der Mittellinie (2) beträgt ±3,0 mm oder weniger an Position (3) des Beispieldokuments (c). Falls die Mittenlinie außerhalb dieses Bereichs liegt, ist folgende Einstellung vorzunehmen.

1. Schalten Sie in den Wartungsmodus U034, wählen Sie [LSU Out Left] und [Duplex] .
2. Die Werte einstellen.
   d<0mm : Den Einstellwert erhöhen. d>0mm : Den Einstellwert verringern.
3. Den Einstellwert durch Drücken der Start-Taste bestätigen.

Regolazione della linea centrale

Il valore di riferimento per la linea centrale (2) è pari a ±3,0 mm o inferiore sulla posizione (3) nell'immagine di esempio (c). Se la posizione della linea centrale è all'infuori di questa gamma, effettuare la regolazione seguente.

1. Impostare la modalità manutenzione U034, selezionare [LSU Out Left] e [Duplex] .
2. Regolare i valori.
   d<0mm : Aumentare il valore dell'impostazione. d>0mm : Diminuire il valore dell'impostazione.
3. Premere il tasto di Start per confermare il valore dell'impostazione.

中心线调节

中心线的基准值在图像样张（c）的（3），基准值是纸张中线位置（2）两端 ±3.0mm 以内。超出该范围时，须进行以下调节。

1. 设置维护模式 U034，选择 [LSU Out Left]、[Duplex]。
2. 调整设定值。
   d<0mm：调高设定值。 d>0mm ：调低设定值。
3. 按 Start 键，以确定设定值。

센터라인 조정

센터라인 (2) 은 샘플화상 (c) 의 (3) 위치에서 기준치는 ±3.0mm 이내 . 여기에서 벗어나는 것은 이하의 조정을 합니다 .

1. 메인터넌스 모드 U034 를 세트하고 [LSU Out Left], [Duplex] 를 선택합니다 .
2. 설정치를 조정합니다 .
   d<0mm:설정치를 높입니다 . d>0mm :설정치를 내립니다 .
3. 시작키를 누르고 설정치를 확인합니다 .

センターライン調整

センターラインは、サンプルイメージ (c) の (3) の位置で、基準値は紙のセンター(2) から ±3.0mm 以内。これから外れるときは以下の調整をおこなう。

1. メンテナンスモード U034 をセットし、[LSU Out Left]、[Duplex] を選択する。
2. 設定値を調整する。
   d<0mm :設定値を上げる。d>0mm :設定値を下げる。
3. スタートキーを押し、設定値を確定する。

TONER
www.tonerkopen.nl

KYOCERA Document Solutions America, Inc.
Headquarters
225 Sand Road,
Fairfield, New Jersey 07004-0008, USA
Phone: +1-973-808-8444
Fax: +1-973-882-6000

Latin America
8240 NW 52nd Terrace Dawson Building, Suite 100
Miami, Florida 33166, USA
Phone: +1-305-421-6640
Fax: +1-305-421-6666

KYOCERA Document Solutions Canada, Ltd.
6120 Kestrel Rd., Mississauga, ON L5T 1S8,
Canada
Phone: +1-905-670-4425
Fax: +1-905-670-8116

KYOCERA Document Solutions
Mexico, S.A. de C.V.
Calle Arquimedes No. 130, 4 Piso, Colonia Polanco
Chapultepec, Delegacion Miguel Hidalgo,
Distrito Federal, C.P. 11560, México
Phone: +52-555-383-2741
Fax: +52-555-383-7804

KYOCERA Document Solutions Brazil, Ltda.
Av.Tambore,1180 Mod.B-09 CEP 06460-000
Tambore-Barueri-SP, Brazil
Phone: +55-11-4195-8496
Fax: +55-11-4195-6167

KYOCERA Document Solutions
Australia Pty. Ltd.
Level 3, 6-10 Talavera Road North Ryde N.S.W, 2113,
Australia
Phone: +61-2-9888-9999
Fax: +61-2-9888-9588

KYOCERA Document Solutions
New Zealand Ltd.
1-3 Parkhead Place, Albany, Auckland 1330,
New Zealand
Phone: +64-9-415-4517
Fax: +64-9-415-4597

KYOCERA Document Solutions Asia Limited
16/F.,Mita Centre, 552-566, Castle Peak Road
Tsuenwan, NT, Hong Kong
Phone: +852-2610-2181
Fax: +852-2610-2063

KYOCERA Document Solutions
(China) Corporation
8F, No. 288 Nanjing Road West, Huangpu District,
Shanghai,200003, China
Phone: +86-21-5301-1777
Fax: +86-21-5302-8300

KYOCERA Document Solutions
(Thailand) Corp., Ltd.
335 Ratchadapisek Road, Bangsue, Bangkok 10800,
Thailand
Phone: +66-2-586-0333
Fax: +66-2-586-0278

KYOCERA Document Solutions
Singapore Pte. Ltd.
12 Tai Seng Street #04-01A,
Luxasia Building, Singapore 534118
Phone: +65-6741-8733
Fax: +65-6748-3788

KYOCERA Document Solutions
Hong Kong Limited
16/F.,Mita Centre, 552-566, Castle Peak Road
Tsuenwan, NT, Hong Kong
Phone: +852-3582-4000
Fax: +852-3185-1399

KYOCERA Document Solutions
Taiwan Corporation
6F., No.37, Sec. 3, Minquan E. Rd.,
Zhongshan Dist., Taipei 104, Taiwan R.O.C.
Phone: +886-2-2507-6709
Fax: +886-2-2507-8432

KYOCERA Document Solutions Korea Co., Ltd.
18F, Kangnam bldg, 1321-1,
Seocho-Dong, Seocho-Gu, Seoul, Korea
Phone: +822-6933-4050
Fax: +822-747-0084

KYOCERA Document Solutions
India Private Limited
First Floor, ORCHID CENTRE
Sector-53, Golf Course Road, Gurgaon 122 002,
India
Phone: +91-0124-4671000
Fax: +91-0124-4671001

TONER
www.tonerplus.com.ua

KYOCERA Document Solutions Europe B.V.
Bloemlaan 4, 2132 NP Hoofddorp,
The Netherlands
Phone: +31-20-654-0000
Fax: +31-20-653-1256

KYOCERA Document Solutions Nederland B.V.
Beechavenue 25, 1119 RA Schiphol-Rijk,
The Netherlands
Phone: +31-20-5877200
Fax: +31-20-5877260

KYOCERA Document Solutions (U.K.) Limited
Eldon Court, 75-77 London Road,
Reading, Berkshire RG1 5BS,
United Kingdom
Phone: +44-118-931-1500
Fax: +44-118-931-1108

KYOCERA Document Solutions Italia S.p.A.
Via Verdi, 89/91 20063 Cernusco s/N.(MI),
Italy
Phone: +39-02-921791
Fax: +39-02-92179-600

KYOCERA Document Solutions Belgium N.V.
Sint-Martinusweg 199-201 1930 Zaventem,
Belgium
Phone: +32-2-7209270
Fax: +32-2-7208748

KYOCERA Document Solutions France S.A.S.
Espace Technologique de St Aubin
Route de l'Orme 91195 Gif-sur-Yvette CEDEX,
France
Phone: +33-1-69852600
Fax: +33-1-69853409

KYOCERA Document Solutions Espana, S.A.
Edificio Kyocera, Avda. de Manacor No.2,
28290 Las Matas (Madrid), Spain
Phone: +34-91-6318392
Fax: +34-91-6318219

KYOCERA Document Solutions Finland Oy
Atomitie 5C, 00370 Helsinki,
Finland
Phone: +358-9-47805200
Fax: +358-9-47805390

KYOCERA Document Solutions Europe B.V., Amsterdam (NL) Zürich Branch
Hohlstrasse 614, 8048 Zürich,
Switzerland
Phone: +41-44-9084949
Fax: +41-44-9084950

KYOCERA Document Solutions Deutschland GmbH
Otto-Hahn-Strasse 12, 40670 Meerbusch,
Germany
Phone: +49-2159-9180
Fax: +49-2159-918100

KYOCERA Document Solutions Austria GmbH
Eduard-Kittenberger-Gasse 95, 1230 Vienna,
Austria
Phone: +43-1-863380
Fax: +43-1-86338-400

KYOCERA Document Solutions Nordic AB
Esbogatan 16B 164 75 Kista, Sweden
Phone: +46-8-546-550-00
Fax: +46-8-546-550-10

KYOCERA Document Solutions Norge Nuf
Postboks 150 Oppsal, 0619 Oslo,
Norway
Phone: +47-22-62-73-00
Fax: +47-22-62-72-00

KYOCERA Document Solutions Danmark A/S
Ejby Industrivej 60, DK-2600 Glostrup,
Denmark
Phone: +45-70223880
Fax: +45-45765850

KYOCERA Document Solutions Portugal Lda.
Rua do Centro Cultural, 41 (Alvalade) 1700-106 Lisboa,
Portugal
Phone: +351-21-843-6780
Fax: +351-21-849-3312

KYOCERA Document Solutions South Africa (Pty) Ltd.
KYOCERA House, Hertford Office Park,
90 Bekker Road (Cnr. Allandale), Midrand, South Africa.
Phone: +27-11-540-2600
Fax: +27-11-466-3050

KYOCERA Document Solutions Russia LLC
Botanichesky pereulok 5, Moscow, 129090,
Russia
Phone: +7(495)741-0004
Fax: +7(495)741-0018

KYOCERA Document Solutions Middle East
Dubai Internet City, Bldg. 17,
Office 157 P.O. Box 500817, Dubai,
United Arab Emirates
Phone: +971-04-433-0412

KYOCERA Document Solutions Inc.
2-28, 1-chome, Tamatsukuri, Chuo-ku
Osaka 540-8585, Japan
Phone: +81-6-6764-3555
http://www.kyoceradocumentsolutions.com

© 2013 KYOCERA Document Solutions Inc.
KYOCERA is a trademark of KYOCERA Corporation