KYOCERA

TASKalfa 2550ci

SERVICE MANUAL

Published in September 2012
842MV116
2MVSM066
Rev.6

CAUTION

RISK OF EXPLOSION IF BATTERY IS REPLACED BY AN INCORRECT TYPE. DISPOSE OF USED BATTERIES ACCORDING TO THE INSTRUCTIONS.

It may be illegal to dispose of this battery into the municipal waste stream. Check with your local solid waste officials for details in your area for proper disposal.

ATTENTION

IL Y A UN RISQUE D'EXPLOSION SI LA BATTERIE EST REMPLACEE PAR UN MODELE DE TYPE INCORRECT. METTRE AU REBUT LES BATTERIES UTILISEES SELON LES INSTRUCTIONS DONNEES.

Il peut être illégal de jeter les batteries dans des eaux d'égout municipales. Vérifiez avec les fonctionnaires municipaux de votre région pour les détails concernant des déchets solides et une mise au rebut appropriée.

Revision history

Revision	Date	Replaced pages	Remarks
1	3 April 2012	Cover, 1-2-2, 1-2-3, 1-2-6, 1-2-12 to 1-2-15, 1-2-17, 1-3-2 to 1-3-4, 1-3-6, 1-3-7, 1-3-28, 1-3-29, 1-3-35, 1-3-38, 1-3-39, 1-3-53, 1-3-57 to 1-3-64, 1-3-70, 1-3-76, 1-3-77, 1-3-98, 1-3-124, 1-3-125, 1-3-130, 1-3-134, 1-3-135, 1-3-178, 1-4-12 to 1-4-15, 1-4-23 to 1-4-25, 1-4-30, 1-5-6, 1-5-9, 1-5-11, 1-5-15 to 1-5-18, 1-5-47, 2-2-7, 2-2-8, 2-3-18, 2-4-12, address	-
2	9 May 2012	1-2-14, 1-2-15, 2-4-1	-
3	21 May 2012	1-1-2, 1-1-4	-
4	18 June 2012	Contents, 1-3-16, 1-3-55, 1-3-136, 1-3-137, 1-3-171, 1-4-41, 1-4-42, 1-5-5, 1-6-1, 2-4-10 to 19	-
5	20 August 2012	1-3-112, 1-3-114, 2-4-21	-
6	21 September 2012	1-5-43	-

This page is intentionally left blank.

Safety precautions

This booklet provides safety warnings and precautions for our service personnel to ensure the safety of their customers, their machines as well as themselves during maintenance activities. Service personnel are advised to read this booklet carefully to familiarize themselves with the warnings and precautions described here before engaging in maintenance activities.

Safety warnings and precautions

Various symbols are used to protect our service personnel and customers from physical danger and to prevent damage to their property. These symbols are described below:

⚠**DANGER:** High risk of serious bodily injury or death may result from insufficient attention to or incorrect compliance with warning messages using this symbol.

⚠**WARNING:** Serious bodily injury or death may result from insufficient attention to or incorrect compliance with warning messages using this symbol.

⚠**CAUTION:** Bodily injury or damage to property may result from insufficient attention to or incorrect compliance with warning messages using this symbol.

Symbols

The triangle (△) symbol indicates a warning including danger and caution. The specific point of attention is shown inside the symbol.

 General warning.  Warning of risk of electric shock.

 Warning of high temperature.

⃠ indicates a prohibited action. The specific prohibition is shown inside the symbol.

 General prohibited action.  Disassembly prohibited.

● indicates that action is required. The specific action required is shown inside the symbol.

 General action required.  Remove the power plug from the wall outlet.

 Always ground the copier.

1. Installation Precautions

⚠WARNING

- Do not use a power supply with a voltage other than that specified. Avoid multiple connections to one outlet: they may cause fire or electric shock. When using an extension cable, always check that it is adequate for the rated current. .....
- Connect the ground wire to a suitable grounding point. Not grounding the copier may cause fire or electric shock. Connecting the earth wire to an object not approved for the purpose may cause explosion or electric shock. Never connect the ground cable to any of the following: gas pipes, lightning rods, ground cables for telephone lines and water pipes or faucets not approved by the proper authorities. .....

⚠CAUTION:

- Do not place the copier on an infirm or angled surface: the copier may tip over, causing injury. .....
- Do not install the copier in a humid or dusty place. This may cause fire or electric shock. .....
- Do not install the copier near a radiator, heater, other heat source or near flammable material. This may cause fire. .....
- Allow sufficient space around the copier to allow the ventilation grills to keep the machine as cool as possible. Insufficient ventilation may cause heat buildup and poor copying performance. .....
- Always handle the machine by the correct locations when moving it. .....
- Always use anti-toppling and locking devices on copiers so equipped. Failure to do this may cause the copier to move unexpectedly or topple, leading to injury. .....
- Avoid inhaling toner or developer excessively. Protect the eyes. If toner or developer is accidentally ingested, drink a lot of water to dilute it in the stomach and obtain medical attention immediately. If it gets into the eyes, rinse immediately with copious amounts of water and obtain medical attention. .....
- Advice customers that they must always follow the safety warnings and precautions in the copier's instruction handbook. .....

2. Precautions for Maintenance

WARNING

- Always remove the power plug from the wall outlet before starting machine disassembly. .....
- Always follow the procedures for maintenance described in the service manual and other related brochures. .....
- Under no circumstances attempt to bypass or disable safety features including safety mechanisms and protective circuits. .....
- Always use parts having the correct specifications. .....
- Always use the thermostat or thermal fuse specified in the service manual or other related brochure when replacing them. Using a piece of wire, for example, could lead to fire or other serious accident. .....
- When the service manual or other serious brochure specifies a distance or gap for installation of a part, always use the correct scale and measure carefully. .....
- Always check that the copier is correctly connected to an outlet with a ground connection. .....
- Check that the power cable covering is free of damage. Check that the power plug is dust-free. If it is dirty, clean it to remove the risk of fire or electric shock. .....
- Never attempt to disassemble the optical unit in machines using lasers. Leaking laser light may damage eyesight. .....
- Handle the charger sections with care. They are charged to high potentials and may cause electric shock if handled improperly. .....

CAUTION

- Wear safe clothing. If wearing loose clothing or accessories such as ties, make sure they are safely secured so they will not be caught in rotating sections. .....
- Use utmost caution when working on a powered machine. Keep away from chains and belts. .....
- Handle the fixing section with care to avoid burns as it can be extremely hot. .....
- Check that the fixing unit thermistor, heat and press rollers are clean. Dirt on them can cause abnormally high temperatures. .....

- Do not remove the ozone filter, if any, from the copier except for routine replacement. .....
- Do not pull on the AC power cord or connector wires on high-voltage components when removing them; always hold the plug itself. .....
- Do not route the power cable where it may be stood on or trapped. If necessary, protect it with a cable cover or other appropriate item. .....
- Treat the ends of the wire carefully when installing a new charger wire to avoid electric leaks. .....
- Remove toner completely from electronic components. .....
- Run wire harnesses carefully so that wires will not be trapped or damaged. .....
- After maintenance, always check that all the parts, screws, connectors and wires that were removed, have been refitted correctly. Special attention should be paid to any forgotten connector, trapped wire and missing screws. .....
- Check that all the caution labels that should be present on the machine according to the instruction handbook are clean and not peeling. Replace with new ones if necessary. .....
- Handle greases and solvents with care by following the instructions below: .....
  · Use only a small amount of solvent at a time, being careful not to spill. Wipe spills off completely.
  · Ventilate the room well while using grease or solvents.
  · Allow applied solvents to evaporate completely before refitting the covers or turning the power switch on.
  · Always wash hands afterwards.
- Never dispose of toner or toner bottles in fire. Toner may cause sparks when exposed directly to fire in a furnace, etc. .....
- Should smoke be seen coming from the copier, remove the power plug from the wall outlet immediately. .....

3. Miscellaneous

WARNING

- Never attempt to heat the drum or expose it to any organic solvents such as alcohol, other than the specified refiner; it may generate toxic gas. .....
- Keep the machine away from flammable liquids, gases, and aerosols. A fire or an electric shock might occur. .....

This page is intentionally left blank.

CONTENTS

1-5 Assembly and disassembly

1-6 Requirements on PWB Replacement

2-1 Mechanical Construction

2-2 Electrical Parts Layout

2-3 Operation of the PWBs

2-4 Appendixes

Installation Guide

1-1-1 Specifications

Machine

Item		Specifications			
Type		Desktop			
Printing method		Electrophotography by semiconductor laser, tandem (4) drum system			
Originals		Sheet, Book, 3-dimensional objects (maximum original size: A3/Ledger)			
Original feed system		Fixed			
Paper weight	Cassette	60 to 256 g/m² (Duplex: 60 to 220 g/m²)			
	MP tray	60 to 256 g/m², 230µm (Cardstock)			
Paper type	Cassette	Plain, Recycled, Preprinted, Bond, Color (Colour), Letterhead, Thick, High quality, Custom 1 to 8			
	MP tray	Plain, Vellum, Recycled, Preprinted, Bond, Cardstock, Color (Colour), Letterhead, Thick, Envelope, Coated, High quality, Rough, Transparency (OHP film), Labels, Prepunched ,Custom 1 to 8			
Paper size	Cassette	A3, A4, A5, B4, B5, Ledger, Letter, Legal, Statement, Oficio II, Folio, 8K, 16K			
	MP tray	A3, A4, A5, A6, B4, B5, ISO B5, B6, Ledger, Letter, Legal, Statement, Executive, Oficio II, Folio, 8K, 16K, Envelope #10, Envelope #9, Envelope #6, Envelope Monarch, Envelope DL, Envelope C4, Envelope C5, Postcards, Return postcard, Youkei 2, Youkei 4, Custom			
Zoom level		Manual mode : 25 to 400%, 1% increments Auto mode :400%, 200%, 141%, 122%, 115%, 86%, 81%, 70%, 50%, 25%			
Copying speed (Simplex)		Color		B/W	
		Cassette	MP tray	Cassette	MP tray
	A4/Letter	25 sheets/min	17 sheets/min	25 sheets/min	17 sheets/min
	A4R/LetterR	17 sheets/min	14 sheets/min	17 sheets/min	14 sheets/min
	A3/Ledger	13 sheets/min	10 sheets/min	13 sheets/min	10 sheets/min
	B4/Legal	13 sheets/min	10 sheets/min	13 sheets/min	10 sheets/min
	B5	25 sheets/min	17 sheets/min	25 sheets/min	17 sheets/min
	B5R	17 sheets/min	14 sheets/min	17 sheets/min	14 sheets/min
	A5R	13 sheets/min	10 sheets/min	13 sheets/min	10 sheets/min
	A6R	-	10 sheets/min	-	10 sheets/min
First copy time (A4, feed from cassette)		When the DP is not used: 9.9 s or less (Color) / 7.9 s or less (B/W) When using the DP : 11.9 s or less (Color) / 9.9 s or less (B/W)			
Warm-up time (22 °C/71.6 °F, 60% RH)		Power on : 45 s or less			
Paper capacity	Cassette	1000 sheets (80g/m², 500 sheets x2)			
	MP tray	100 sheets (80 g/m², plain paper, A4/Letter or less) 25 sheets (80 g/m², plain paper, A4/Letter or more)			
Output tray capacity		Inner tray : 250 sheets (80g/m²) Job separator : 30 sheets (80g/m²)			

Item		Specifications
Continuous copying		1 to 999 sheets
Light source		White LED
Scanning system		Flat bed scanning by CCD image sensor
Photoconductor		OPC drum (diameter 30 mm)
Image write system		Semiconductor laser:
Charging system		Contact charger roller method
Developer system		Touch down developing system Developer: 2-component Toner replenishing: Automatic from the toner container
Transfer system		Primary: Transfer belt Secondary: Transfer roller
Separation system		Small diameter separation, separation electrode
Cleaning system		Counter blade cleaning
Charge erasing system		Exposure by cleaning lamp (LED)
Fusing system		One axis IH established method Heat source: IH inverter heating Abnormally high temperature protection devices: thermostat
CPU		PowerPC750CL (600MHz)
Main memory	**Standard**	2048MB
	Maximum	2048 MB
Interface	**Standard**	USB interface connector: 1 (USB Hi-speed) USB host: 2 (USB Hi-speed) Network interface: 1 (10BASE-T/100BASE-TX/1000BASE-T)
	Option	eKUIO slot: 2
Resolution		600 × 600 dpi
Operating environment	**Temperature**	10 to 32.5 °C/50 to 90.5 °F
	Humidity	15 to 80% RH
	Altitude	2,500 m/8,202 ft or less
	Brightness	1,500 lux or less
Dimensions (W × D × H)		594 × 699 × 862 mm / 23 3/8” × 27 1/2 “× 33 15/16”
Weight		95.5 kg / 210.5 lb (with toner containers)
Space required (W × D)		874× 699 mm / 34 7/16” × 27 1/2” (using MP tray)
Power source		120 V AC, 60 Hz, more than 12A 220 - 240 V AC, 50 Hz, more than 7.2 A
Options		Paper feeder (double cassette), Document finisher, Fax kit, Expanded memory, Gigabit ethernet board, Thin print kit, Data security kit, Internet FAX kit, Card Authentication kit, IC card reader holder, Document tray, Key counter, USB key board

Document processor

Item	Specifications
Original feed method	Automatic feed
Supported original types	Sheet originals
Original sizes	Maximum: A3/Ledger Minimum : A5/Statement
Original weights	Simplex: 45 to 160 g/m^2 Duplex : 50 to 120 g/m^2
Loading capacity	50 sheets (50 to 80 g/m^2) or less 30 sheets (50 to 80 g/m^2) or less :Mixed original sizes

Printer

Item		Specifications			
		Color		B/W	
		Cassette	MP tray	Cassette	MP tray
Printing speed (Simplex)	A4/Letter	25 sheets/min	17 sheets/min	25 sheets/min	17 sheets/min
	A4R/LetterR	17 sheets/min	14 sheets/min	17 sheets/min	14 sheets/min
	A3/Ledger	13 sheets/min	10 sheets/min	13 sheets/min	10 sheets/min
	B4/Legal	13 sheets/min	10 sheets/min	13 sheets/min	10 sheets/min
	B5	25 sheets/min	17 sheets/min	25 sheets/min	17 sheets/min
	B5R	17 sheets/min	14 sheets/min	17 sheets/min	14 sheets/min
	A5R	13 sheets/min	10 sheets/min	13 sheets/min	10 sheets/min
	A6R	-	10 sheets/min	-	10 sheets/min
Printing speed (Duplex)	A4/Letter	23 sheets/min	16 sheets/min	23 sheets/min	16 sheets/min
	A4R/LetterR	9 sheets/min	8 sheets/min	9 sheets/min	8 sheets/min
	A3/Ledger	7 sheets/min	6 sheets/min	7 sheets/min	6 sheets/min
	B4/Legal	7 sheets/min	6 sheets/min	7 sheets/min	6 sheets/min
	B5	23 sheets/min	16 sheets/min	23 sheets/min	16 sheets/min
	B5R	9 sheets/min	8 sheets/min	9 sheets/min	8 sheets/min
	A5R	13 sheets/min	9 sheets/min	13 sheets/min	9 sheets/min
First print time (A4, feed from cassette)		B/W : 9.4 s Color : 10.9 s			
Resolution		600 × 600 dpi			
Operating system		Windows 2000, Windows XP, Windows XP Professional, Windows Server 2003, Windows Server 2003, x64 Edition, Windows Vista x86 Edition, Windows Vista x64 Edition, Windows 7 x86 Edition, Windows 7 x64 Edition, Windows Server 2008, Windows Server 2008 x64 Edition, Apple Macintosh OS 9.x, OS X			
Interface		USB interface connector: 1 (USB Hi-speed) Network interface: 1 (10BASE-T/100BASE-TX/1000BASE-T)			
Page description language		PRESCRIBE			
Emulation		PCL-6(PCL5c/PCL-XL), KPDL3, XPS			

Scanner

Item		Specifications
Operating system		Windows XP, Windows Server 2003, Windows Vista, Windows Server 2008, Windows 7
System requirements		IBM PC/AT compatible CPU: Celeron 600 MHz or higher RAM: 128 MB or more HDD free space: 20 MB or more Interface: Ethernet
Resolution		600 dpi, 400 dpi, 300 dpi, 200 dpi, 200 × 100dpi, 200 × 400dpi
File format		TIFF, JPEG, XPS, PDF (MMR/JPEG compression), PDF (high compression)
Scanning speed	**Simplex**	B/W : 48 images/min Color: 48 images/min (A4 landscape,300 dpi, Image quality: Text/Photo original)
	Duplex	B/W : 15 images/min Color : 15 images/min (A4 landscape, 300 dpi, Image quality: Text/Photo original)
Interface		Ethernet (10 BASE-T/100 BASE-TX/1000BASE-T)
Network protocol		TCP/IP
Transmission system		PC transmission SMB: Scan to PC FTP: Scan to FTP, FTP over SSL E-mail transmission SMTP: Scan to E-mail TWAIN scan KM-WSDL, WIA Driver WIA scan WSD-Scan

NOTE: These specifications are subject to change without notice.

1-1-2 Parts names

(1) Machine (front side)

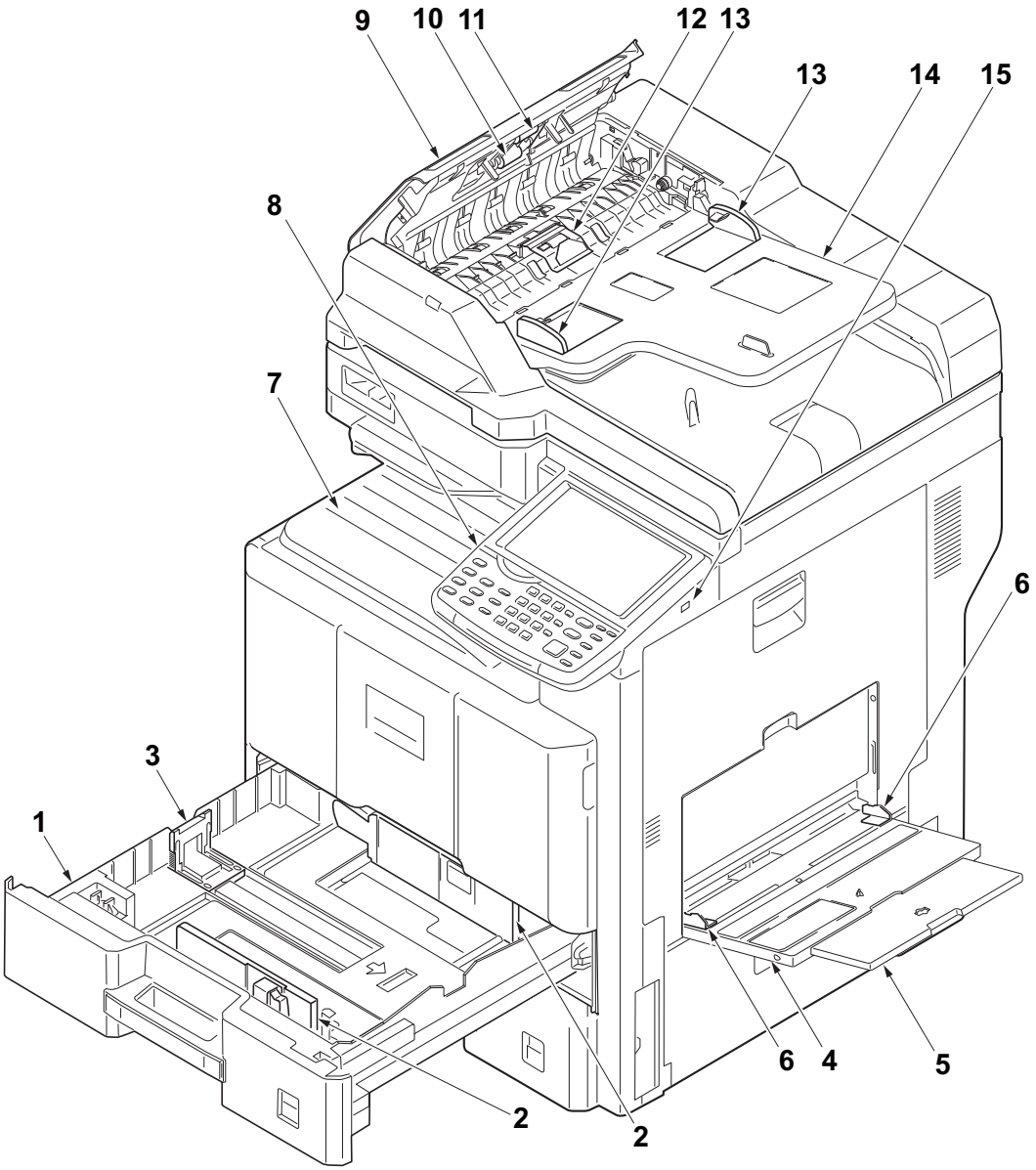

Figure 1-1-1

1. Cassette
2. Paper width guides
3. Paper length guide
4. MP (multi purpose) tray
5. MP tray extension
6. MP Paper width guides
7. Inner tray
8. Operation panel
9. DP top cover
10. DP paper feed roller
11. DP forwarding roller
12. DP separation pully
13. DP original width guides
14. Original table
15. USB memory slot

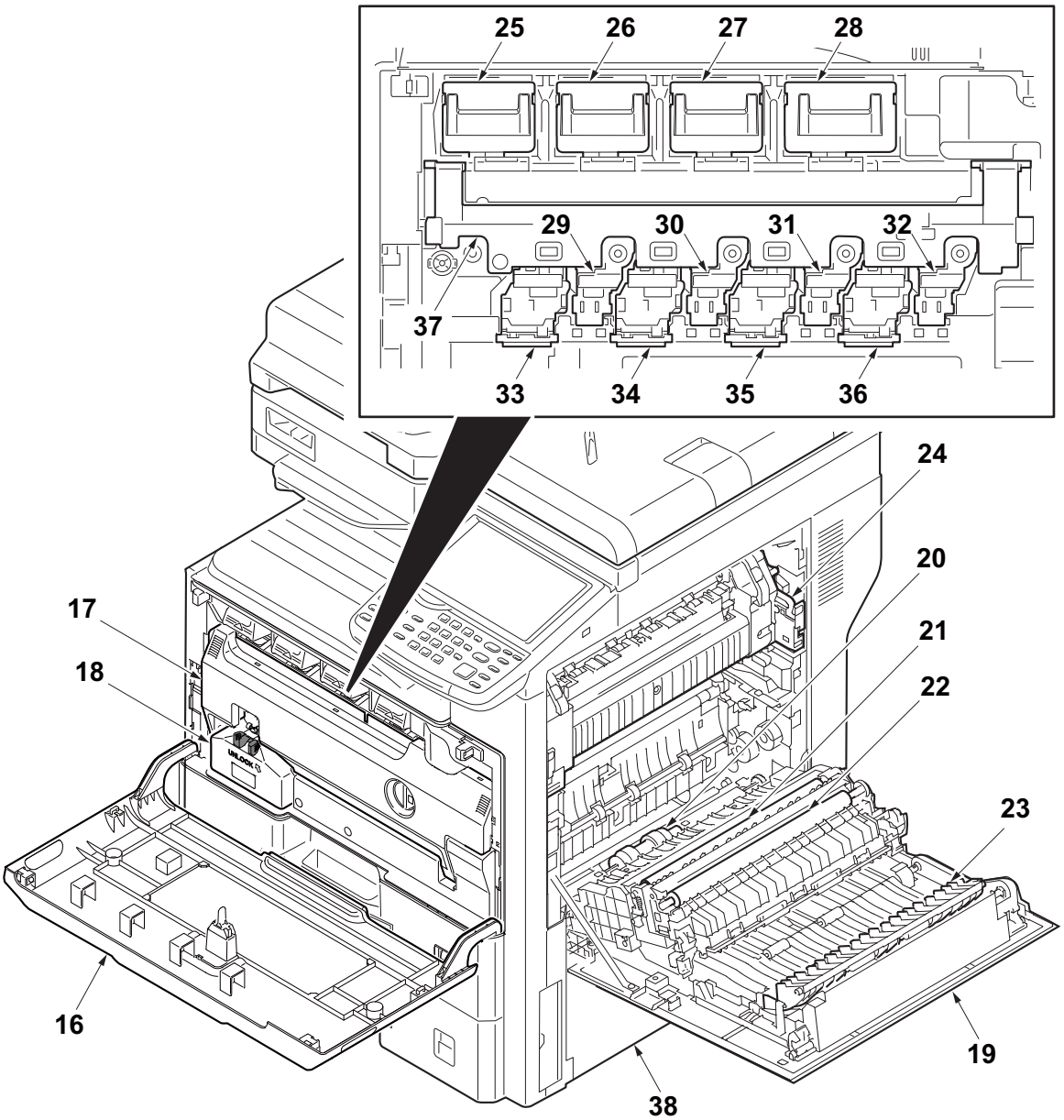

Figure 1-1-2

16. Front cover
17. Duct cover
18. Waste toner box
19. Right cover 1
20. MP paper feed roller
21. Right registration roller
22. Secondary transfer roller
23. Feed shift guide
24. Fuser unit
25. Toner container /Y
26. Toner container /C
27. Toner container /M
28. Toner container /K
29. Drum unit /Y
30. Drum unit /C
31. Drum unit /M
32. Drum unit /K
33. Developer unit /Y
34. Developer unit /C
35. Developer unit /M
36. Developer unit /K
37. Duct holder
38. Right cover 2

(2) Machine (rear side)

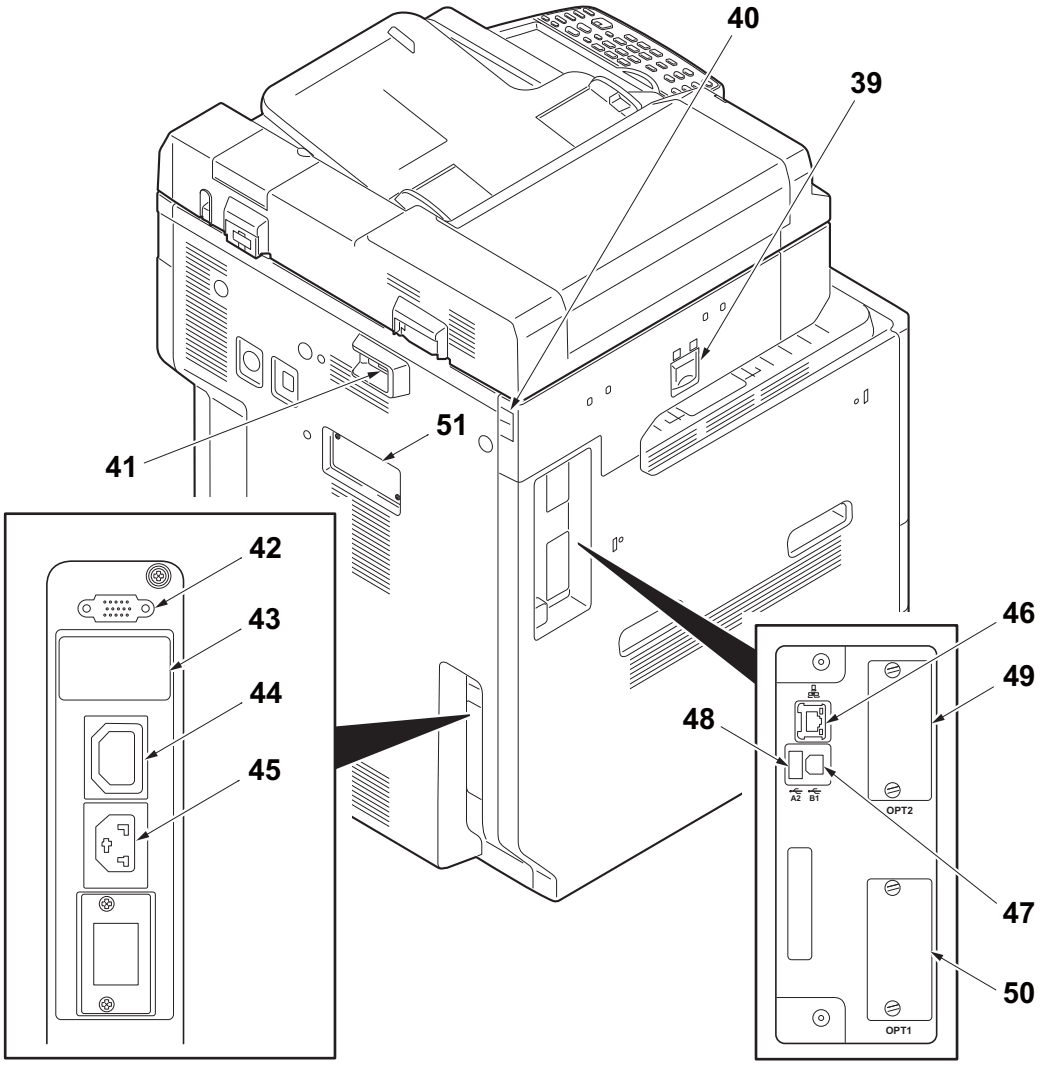

Figure 1-1-3

39. Main power switch
40. Scanner lock lever
41. DP interface connector
42. DF interface connector
43. Cassette heater switch (cover)
44. Outlet connector
45. Inlet connector
46. Network interface connector
47. USB port
48. USB interface connector
49. Option interface slot 2
50. Option interface slot 1
51. FAX memory cover

(3) Operation panel

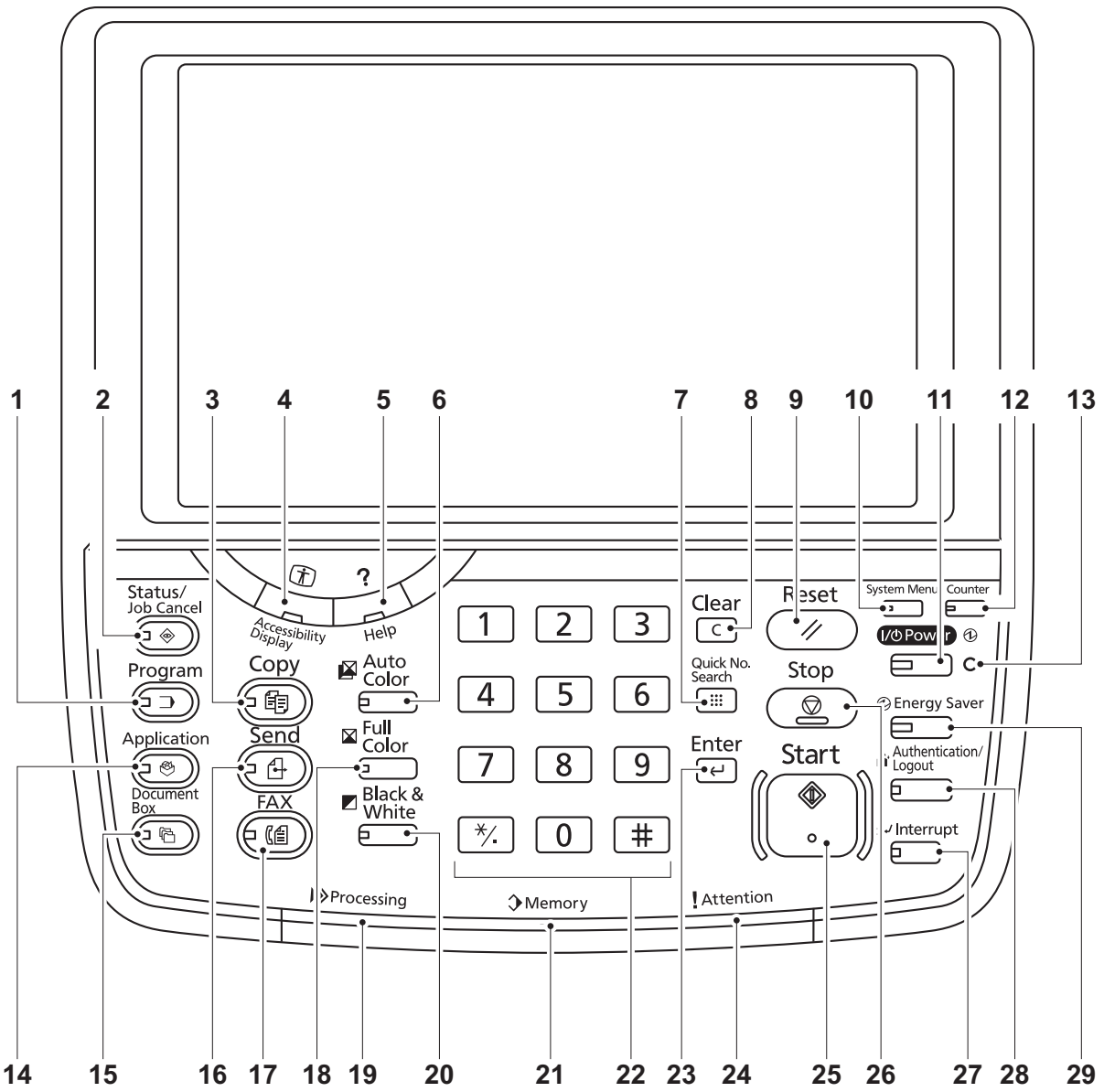

Figure 1-1-4

1. Program key
2. Status/Job cancel key
3. Copy key
4. Accessibility display key
5. Help key
6. Auto color key
7. Quick no. search key
8. Clear key
9. Reset key
10. System menu key
11. Power key
12. Counter key
13. Main power indicator
14. Application key
15. Document box key
16. Send key
17. FAX key
18. Full color key
19. Processing indicator
20. Black and White key
21. Memory indicator
22. Numeric keys
23. Enter key
24. Attention indicator
25. Start key
26. Stop key
27. Interrupt key
28. Authentication/Logout key
29. Energy saver key

1-1-3 Machine cross section

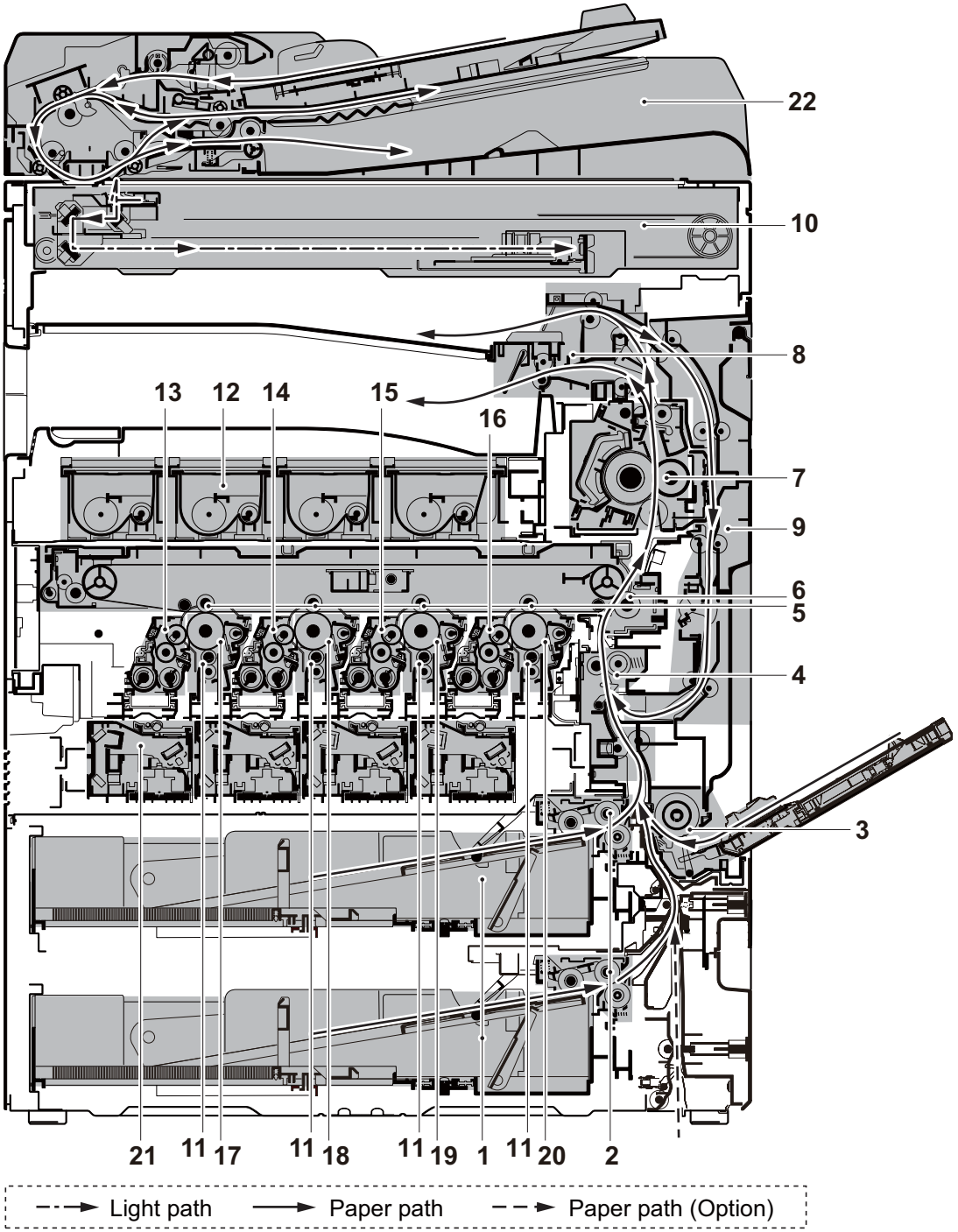

Figure 1-1-5

1. Cassette
2. Cassette paper feed section
3. MP tray paper feed section
4. Conveying section
5. Primary transfer section
6. Secondary transfer section / Separation sections
7. Fuser unit
8. Eject section
9. Duplex/conveyning section
10. Image scanner unit (ISU)
11. Charger roller unit
12. Toner container /YCMK
13. Developer unit /Y
14. Developer unit /C
15. Developer unit /M
16. Developer unit /K
17. Drum unit /Y
18. Drum unit /C
19. Drum unit /M
20. Drum unit /K
21. Laser scanner unit (LSU) /YCMK
22. Document processor (DP)

1-2-1 Installation environment

1. Temperature: 10 to 32.5°C/50 to 90.5°F
2. Humidity: 15 to 80% RH
3. Power supply: 120 V AC, 12.0 A
   220 - 240 V AC, 6.5 A
4. Power supply frequency: 50 Hz ±2%/60 Hz ±2%
5. Installation location
   Avoid direct sunlight or bright lighting. Ensure that the photoconductor will not be exposed to direct sunlight or other strong light when removing paper jams.
   Avoid locations subject to high temperature and high humidity or low temperature and low humidity; an abrupt change in the environmental temperature; and cool or hot, direct air.
   Avoid places subject to dust and vibrations.
   Choose a surface capable of supporting the weight of the machine.
   Place the machine on a level surface.
   The degree of level: 5 mm or less of front and rear, right and left
   Twist: 3 mm or less
   Avoid air-borne substances that may adversely affect the machine or degrade the photoconductor, such as mercury, acidic of alkaline vapors, inorganic gasses, NOx, SOx gases and chlorine-based organic solvents.
   Select a well-ventilated location.
6. Allow sufficient access for proper operation and maintenance of the machine.

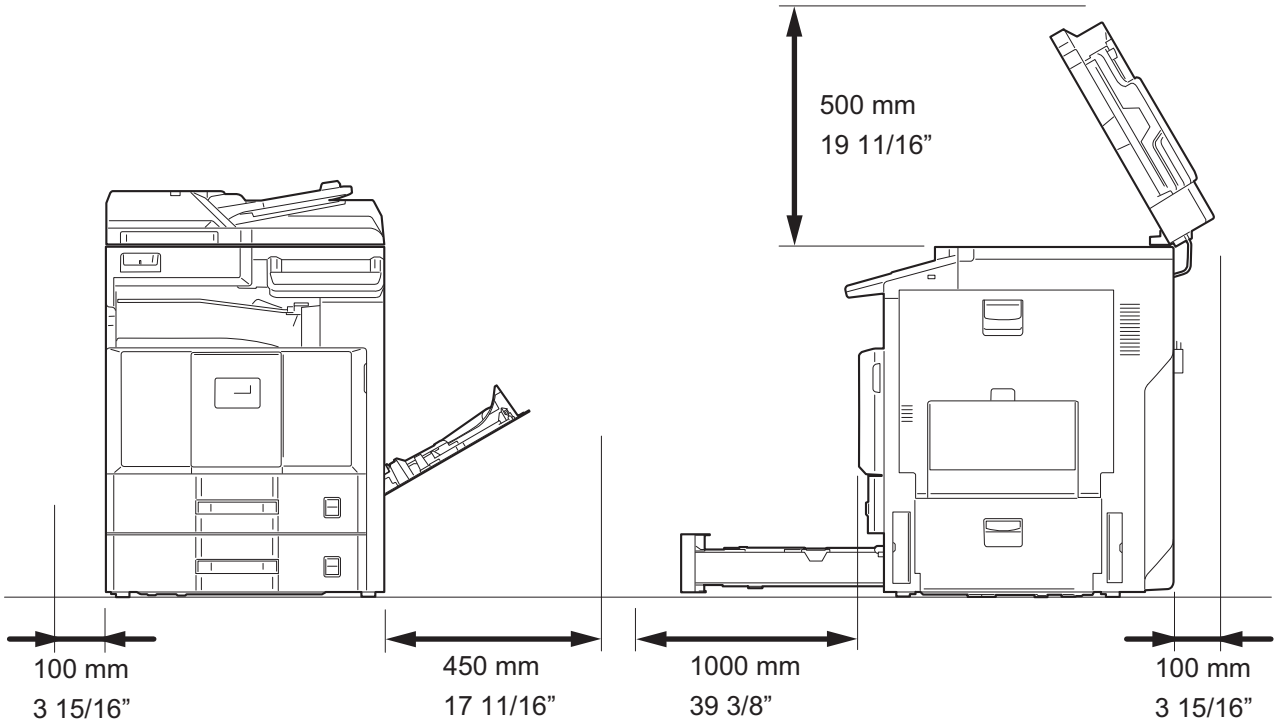

Figure 1-2-1

1-2-2 Unpacking and installation

(1) Installation procedure

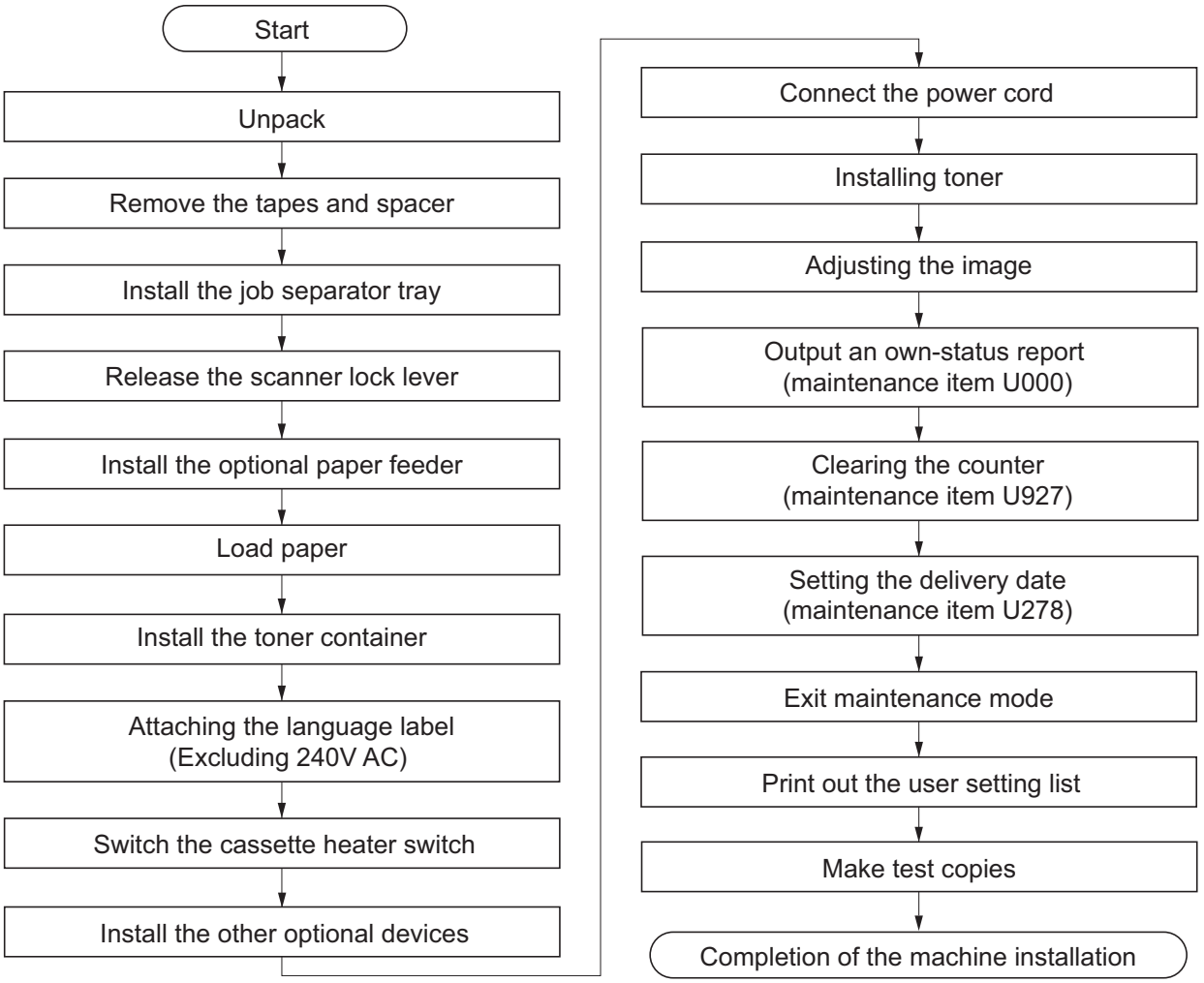

(2) Pre cautions for unpacking

Please remove a tape as follows at the time of unpacking, and pull out a handle.

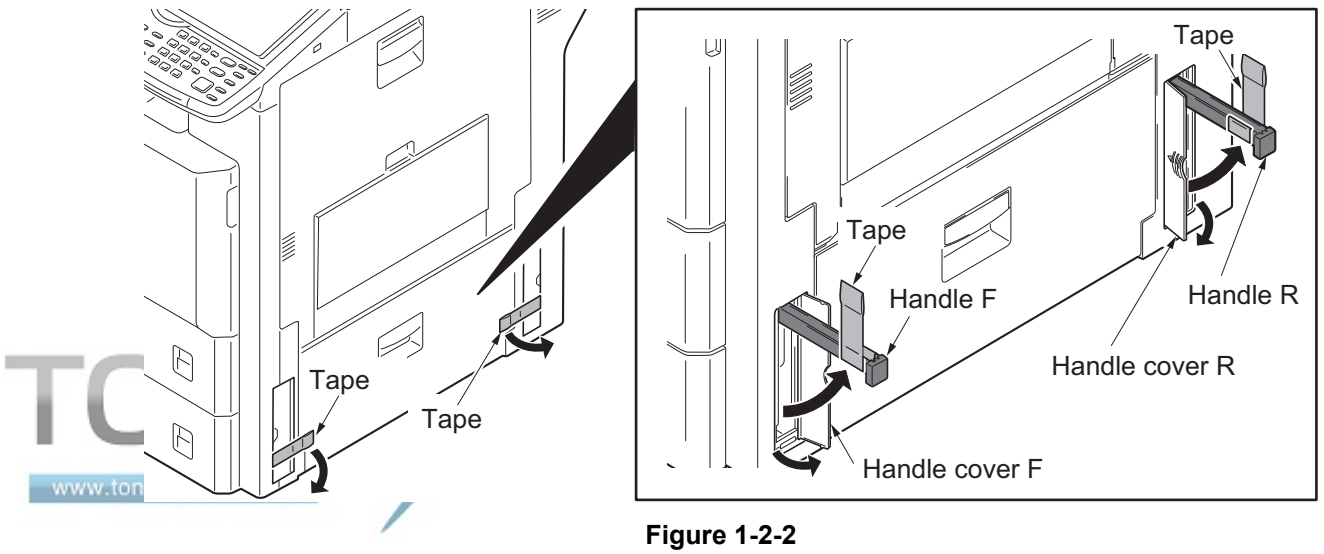

Figure 1-2-2

Unpacking

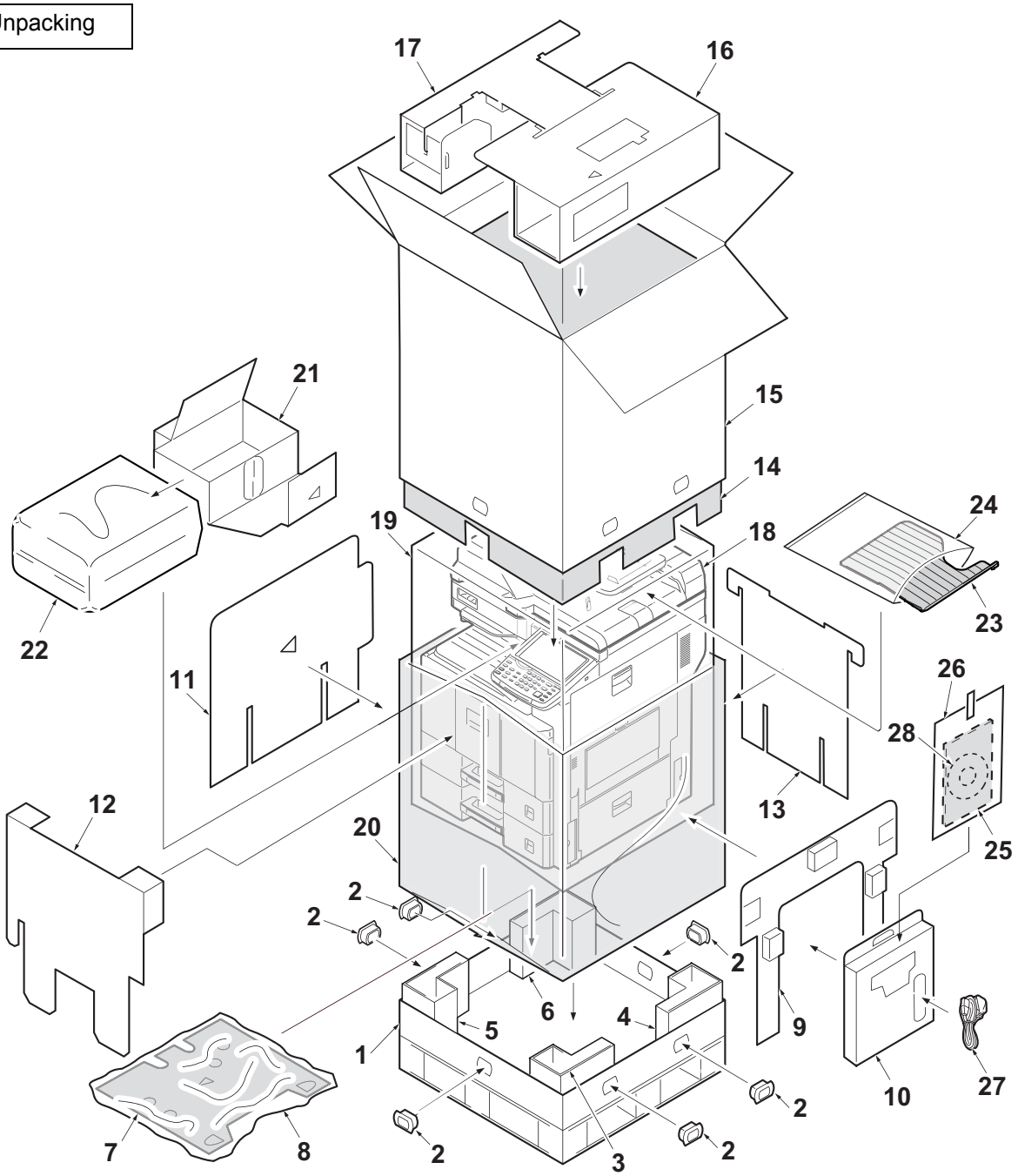

Figure 1-2-3

1. Skid
2. Hinge joints
3. Bottom pad RF
4. Bottom pad R-Rear
5. Bottom pad LF
6. Bottom pad L-Rear
7. Bottom pad Center
8. Plastic bag (600 × 700)
9. Pad R
10. Accessories box
11. Pad L
12. Pad Front
13. Pad Rear
14. Inner case
15. Outer case
16. Top pad R
17. Top pad L
18. Machine
19. Machine cover
20. Plastic bag (Vacuum bag)
21. Toner container box
22. Plastic bag (540 × 950)
23. Job separator tray
24. Plastic bag (400 × 600)
25. Installation guide, etc.
26. Plastic bag
27. Power cord
28. CD-ROM *1

*1:Excluding 230V AC model

Cautions: Place the machine on a level surface.

Remove the tapes and spacer

1. Remove seven tapes.

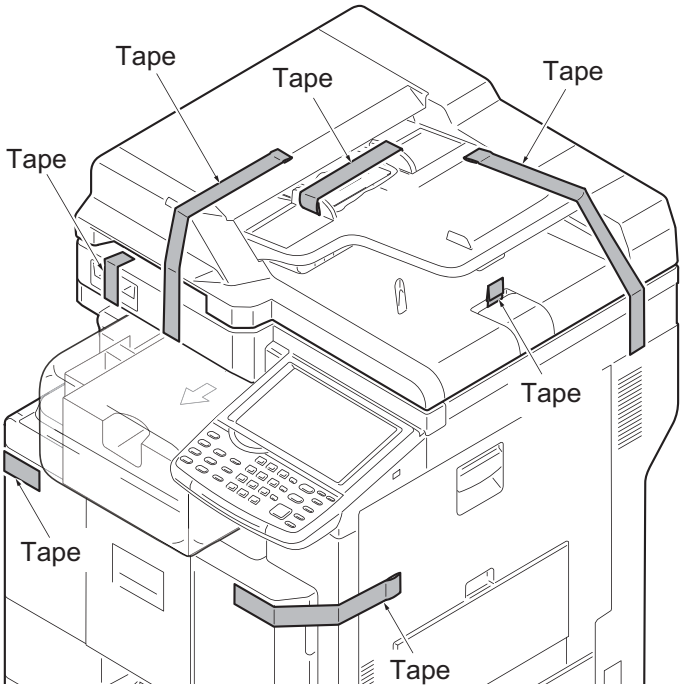

Figure 1-2-4

2. Open the DP top cover.
3. Slide two DP original width guides and then remove the pad.
4. Close the DP top cover.

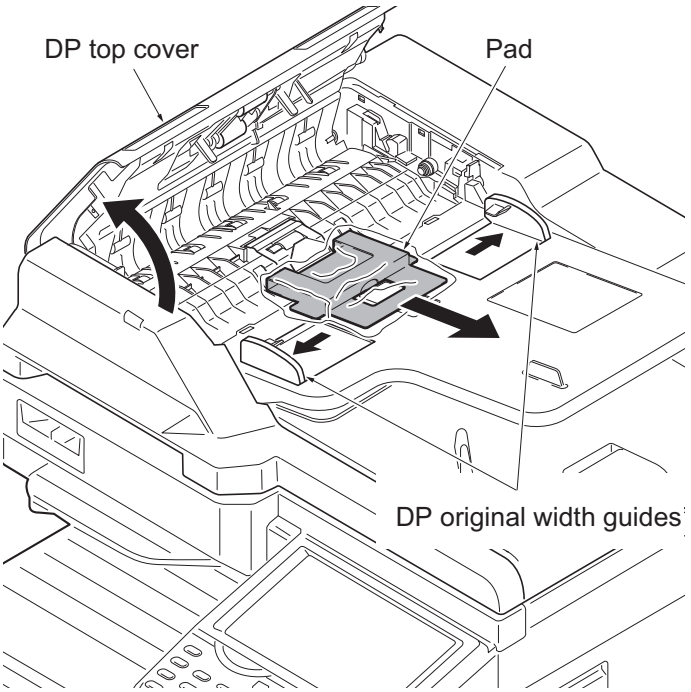

Figure 1-2-5

5. Open the DP.
6. Remove the protective sheet.

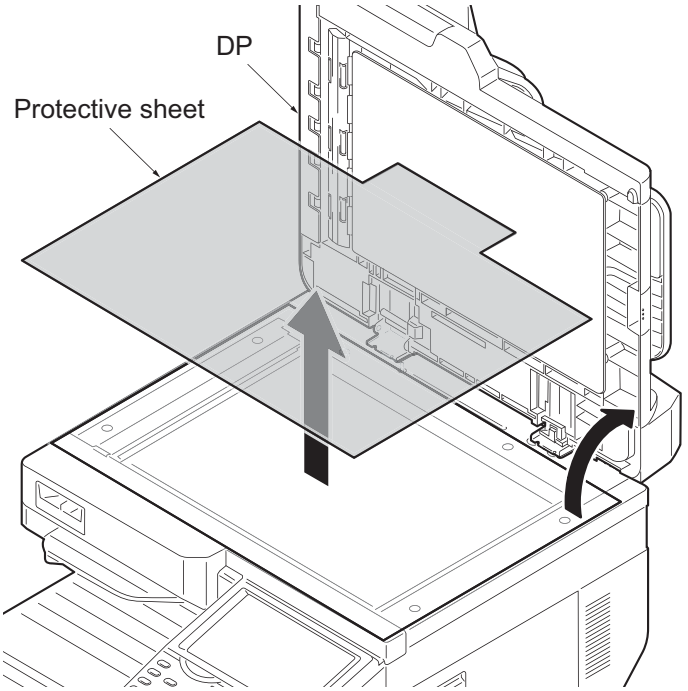

Figure 1-2-6

7. Remove the paper.
8. Close the DP.

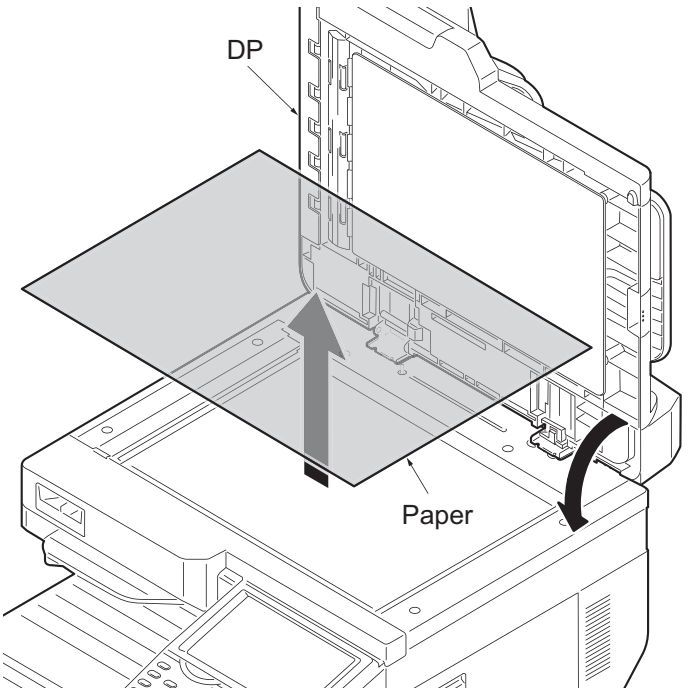

Figure 1-2-7

9. Peel off two tapes and then remove the protective sheet 2.
10. Remove the protective sheet 1.
11. Remove the spacer.

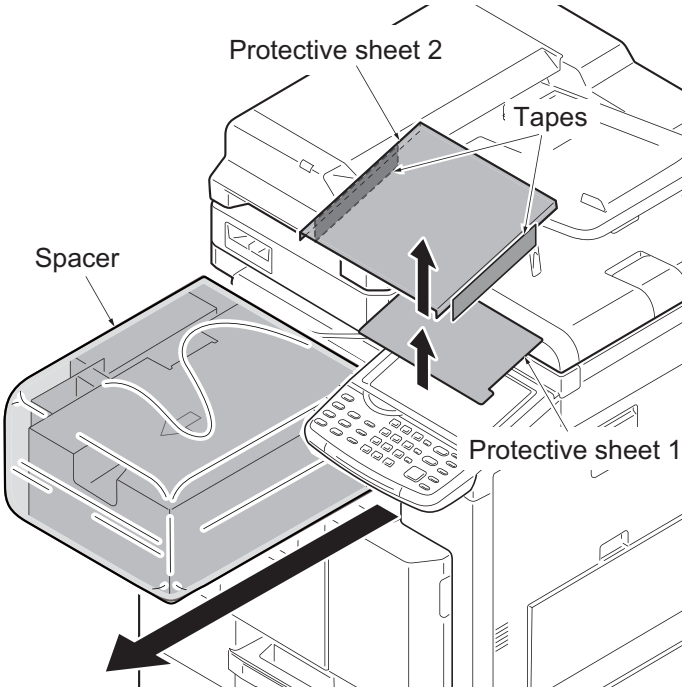

Figure 1-2-8

Install the job separator tray

1. Gently push the job separator tray into the machine along the guides.

   ATTENTION: When installing the Job separator tray, are cautious of the position of a paper guide.

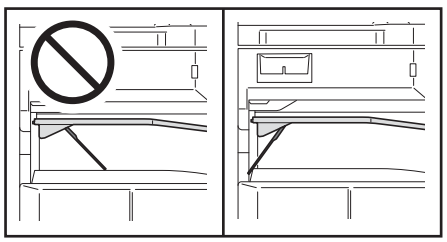

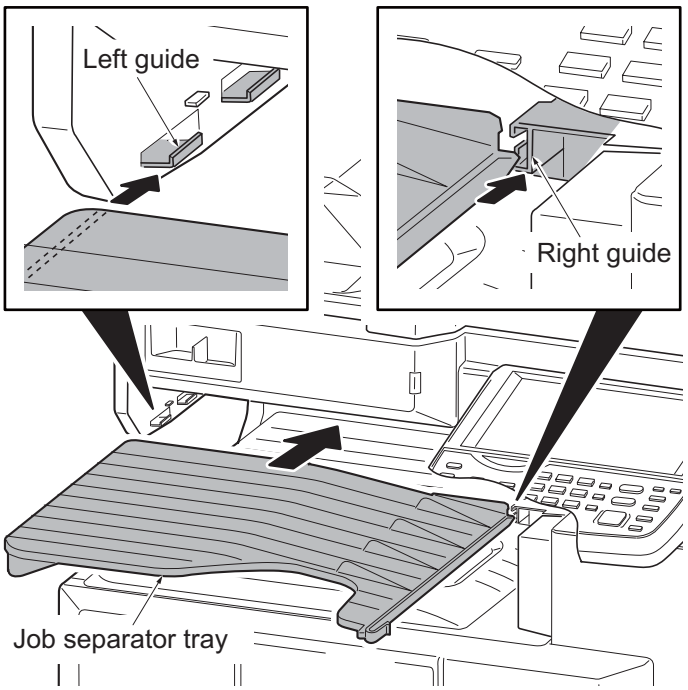

Figure 1-2-9

Release the scanner lock lever

1. Pull the scanner lock lever in the direction of the arrow. This will unlock the scanner mechanism.
   Note: When turning on power if the lock lever is not released, the error message is displayed.

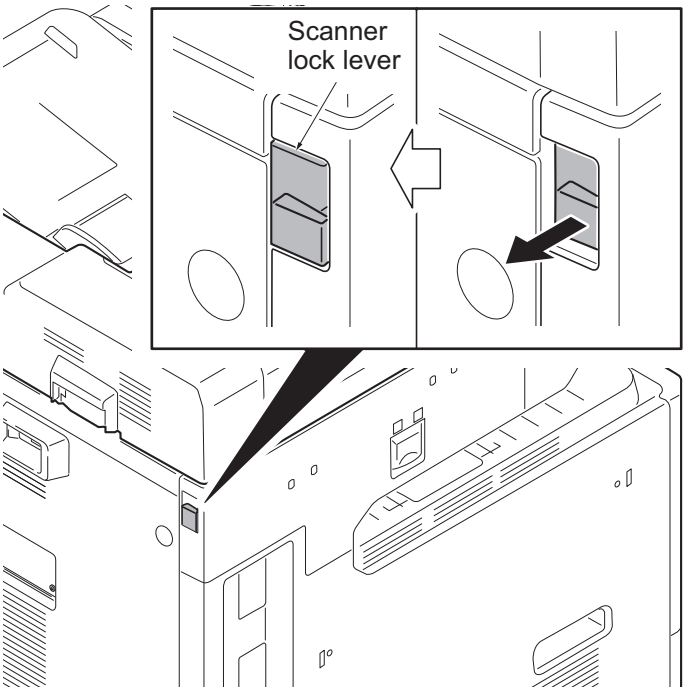

Figure 1-2-10

Install the optional paper feeder

1. Install the optional paper feeder as required.
   Note: Refer to the installation manual of a paper feeder (PF-790) for details.

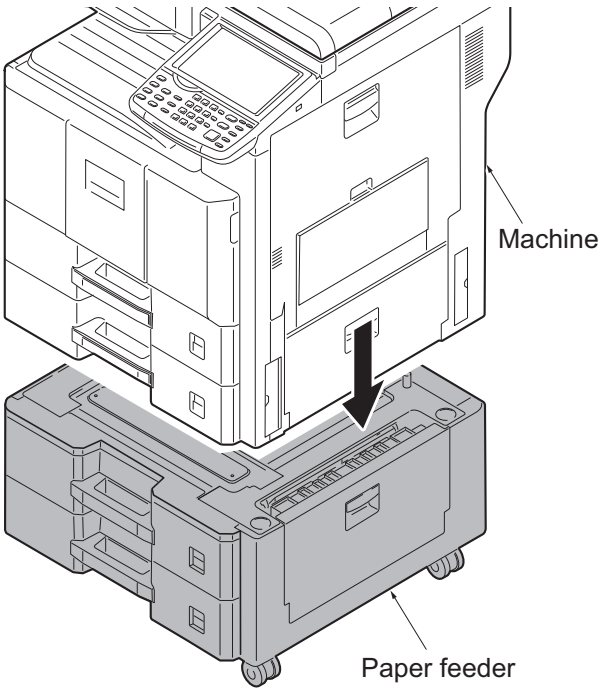

Figure 1-2-11

Load paper

1. Take out the paper preservation bag.
2. Pressing the paper width adjusting tab as shown, move the paper width guides to fit the paper size.

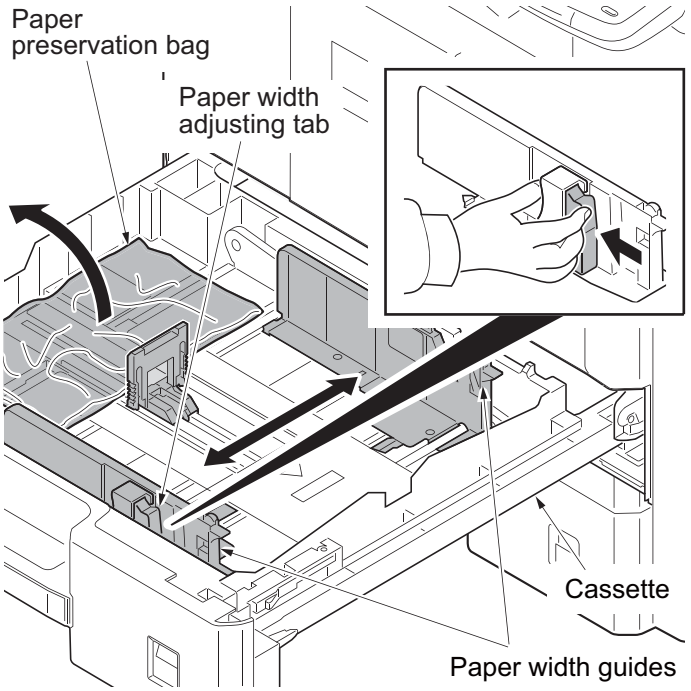

Figure 1-2-12

3. Adjust the paper length guide to fit the paper size.

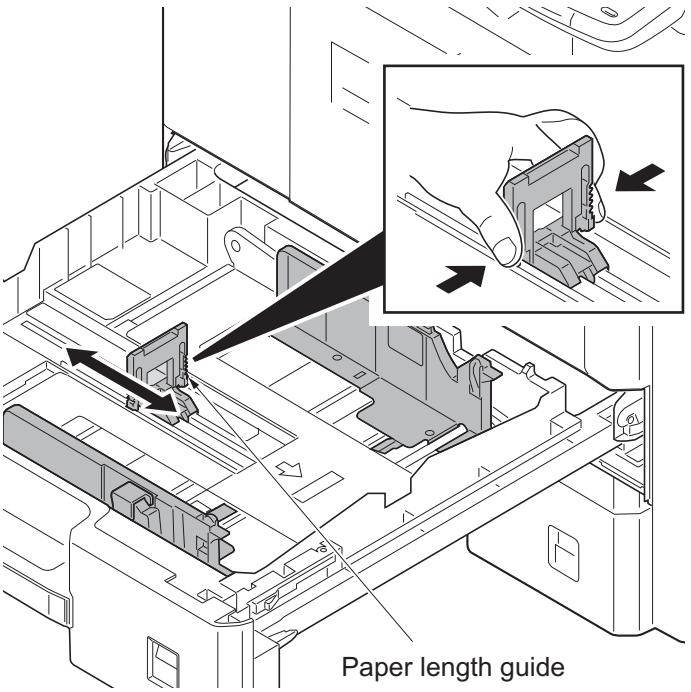

Figure 1-2-13

4. Align the paper so that it is abut with the right end of the cassette.
5. Insert the cassette size plate.
6. Gently push the cassette back in.

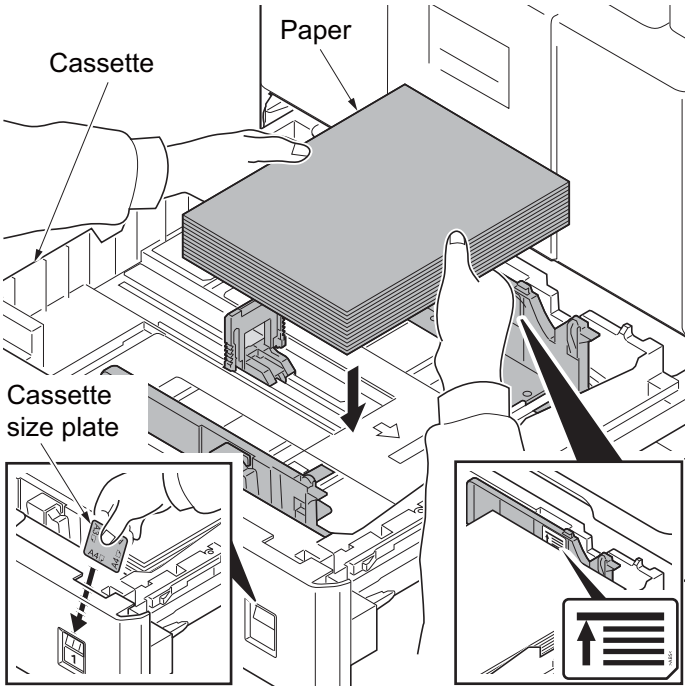

Figure 1-2-14

Install the toner container

1. Open the front cover.
2. Hold the toner container vertically and tap the upper part five times or more. Turn the toner container upside down and tap the upper part five times or more.

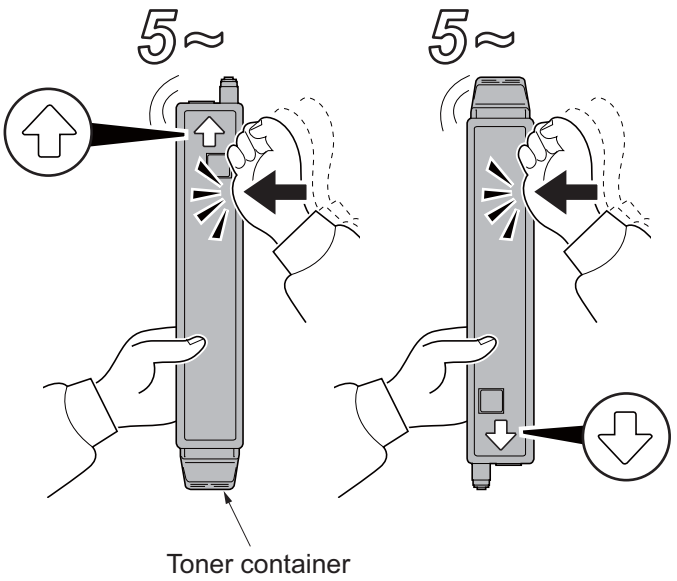

Figure 1-2-15

3. Shake the toner container up and down five times or more.
   Turn the toner container upside down and shake it five times or more.

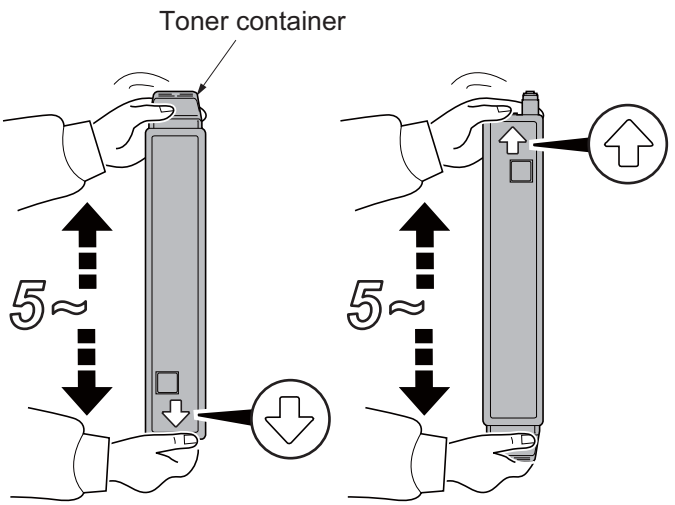

Figure 1-2-16

4. Shake the toner container approximately five or six times in the horizontal direction to stir toner.

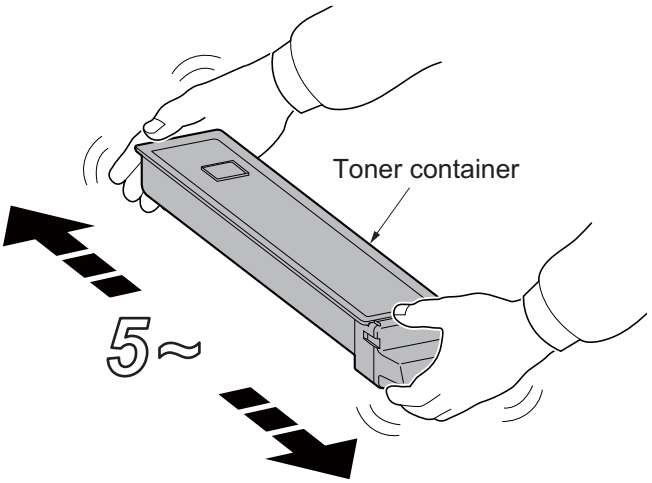

Figure 1-2-17

5. Gently push the toner container into the machine.
   Note: Push the container all the way into the machine until it locks in place.

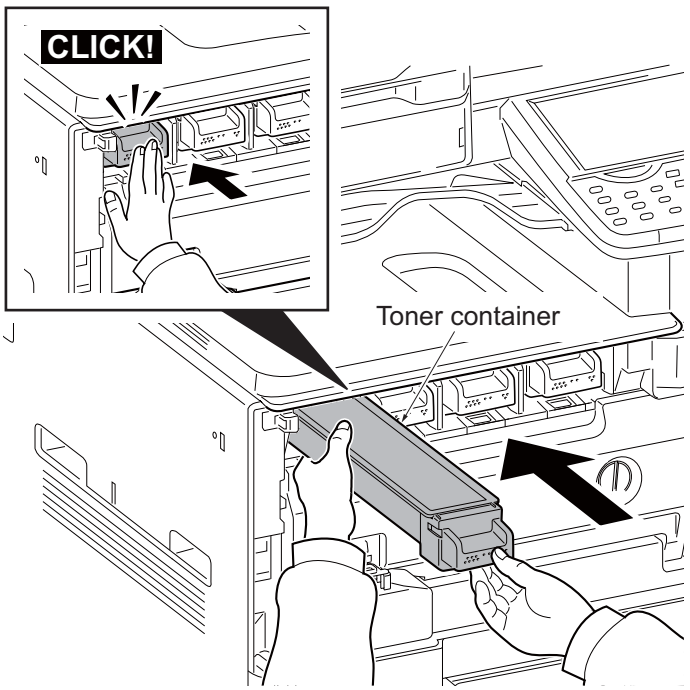

Figure 1-2-18

Attaching the language label (Excluding 240V AC model)

1. Insert a flat-head screwdriver and slide the operation panel covers A and B to remove them.

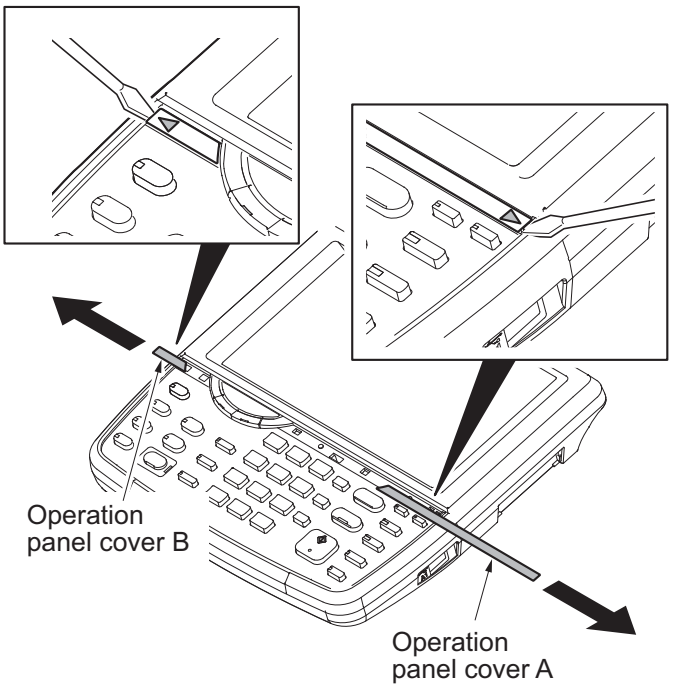

Figure 1-2-19

2. Remove the clear panel.

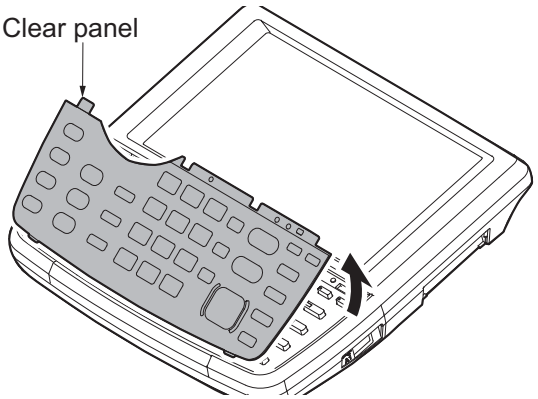

Figure 1-2-20

3. Remove the operation panel sheet.
4. Replace the operation panel sheet of the corresponding language.
5. Refit the clear panel.
6. Refit the operation panel covers A and B.

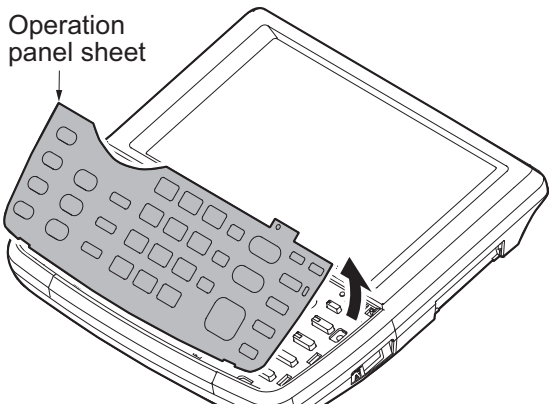

Figure 1-2-21

Switch the cassette heater switch

1. Release the hook and then remove the switch cover.
2. Turn the cassette heater switch on.
   Note: When the cassette heater is used, it turns it on.
3. Refit the switch cover.

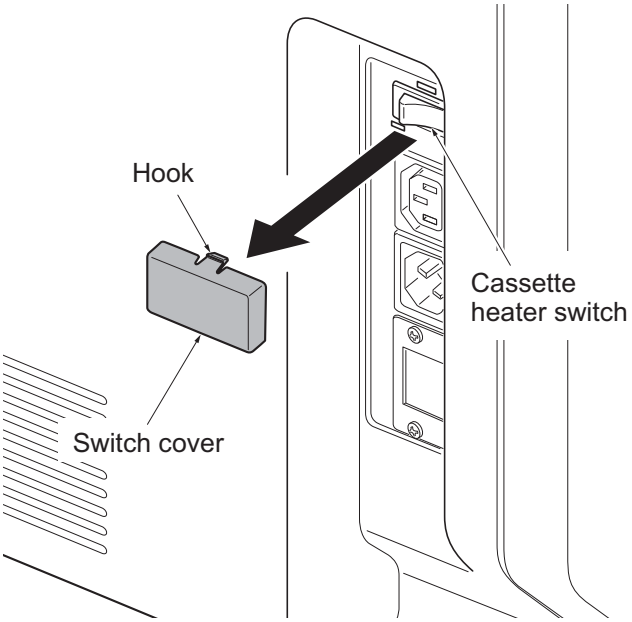

Figure 1-2-22

Install the other optional devices

1. Install the optional devices (Document finisher, Fax kit, etc.) as required.

Connect the power cord

1. Connect the power cord to the connector on the machine.
2. Insert the power plug into the wall outlet.

Installing toner

1. Turn the main power switch on.
   The machine automatically starts to feed toner in the developer unit.
   Note: When the main power switch is turned on for the first time, it takes about one minute until entering the state that can be copied.
2. The drive chain is disengaged when toner installation is completed.

Adjusting the image

1. **Performing calibration (See the operation guide for details, or use maintenance mode U464 [Setting the ID correction operation - performing calibration] to conduct this adjustment.)**
   Press the System menu key.
   Press [Adjustment/Maintenance] and then [Next] of [Calibration].
   Press [Execute] to perform Color calibration. When completed, press [OK].

2. **Performing color registration (See the operation guide for details, or use maintenance mode U469 [Adjusting the color registration] to conduct this adjustment.)**
   Press [Adjustment/Maintenance] and then [Next] of [Color Registration].
   Perform adjustments automatically or manually.
   Auto correction
   Press [Next] in [Auto]. Press [Start]. A chart is printed.
   Set the output chart for adjustment as the original.
   Press [Start] to perform Color registration. When completed, press [OK].
   Manual correction
   Press [Next] in [Manual]. Press [Print] of [Chart]. A chart is printed.
   Find the location on each chart where 2 lines most closely match.
   Press [Next] of [Registration] and [Change].
   Enter the registration values for each chart.
   Press [Start] to perform Color registration. When completed, press [OK].

3. **U410 Adjusting the halftone automatically (see page 1-3-109)**
   Load the cassette with multiple sheets of A4 or Letter paper.
   Enter the maintenance mode by entering 10871087 using the numeric keys.
   Enter 410 using the numeric keys and press the start key.
   Press [Normal Mode] and then press the start key. A test patterns 1, 2 and 3 are outputted.
   Place the output test pattern 1 as the original.
   Place approximately 20 sheets of white paper on the test pattern 1 and set them.
   Press the start key. Adjustment is made.
   Place the output test pattern 2 as the original.
   Place approximately 20 sheets of white paper on the test pattern 2 and set them.
   Press the start key. Adjustment is made.
   Place the output test pattern 3 as the original.
   Place approximately 20 sheets of white paper on the test pattern 2 and set them.
   Press the start key. Adjustment is made.
   [Finish] is displayed in [Phase] when normally completed.
   Press the stop key twice to exit.

4. **Make test copies.**
   If image quality is unsatisfactory after test copying, execute calibration,
   then retry U410-Adjusting the halftone automatically.

Output an own-status report (maintenance item U000)

1. Enter the maintenance mode by entering 10871087 using the numeric keys.
2. Enter 000 using the numeric keys and press the start key.
3. Select Maintenance and press the start key to output a list of the current settings of the maintenance items.
4. Press the stop key to exit.

Clearing the counter (maintenance item U927)

1. Enter 927 using the numeric keys and press the start key.
2. Select [Excute].
3. Press the start key. The counter is cleared.
4. Press the stop key to exit.

Setrting the delivery date (maintenance item U278)

1. Enter 278 using the numeric keys and press the start key.
2. Select [Today].
3. Press the start key. The delivery date is set.
4. Press the stop key to exit.

Exit maintenance mode

1. Enter “001” using the numeric keys and press the start key.

Print out a user setting list

1. Select [Report Print] to print a user setting list.

Make test copies

1. Place an original and make test copies.

Installation is completed.

(3) Setting initial copy modes

Factory settings are as follows:

Maintenance item No.	Contents	Factory setting
U250	Checking/clearing the maintenance cycle	-
U251	Checking/clearing the maintenance counter	-
U252	Setting the destination	-
U253	Switching between double and single counts	Double count (A3/Ledger)
U260	Selecting the timing for copy counting	Eject
U276	Setting the copy count mode	Mode0
U284	Setting 2 color copy mode	Off
U285	Setting service status page	On
U325	Setting the paper interval	Off/1
U326	Setting the black line cleaning indication	On/8
U332	Setting the size conversion factor	1.0 0 1.0 2.5
U340	Setting the applied mode	190/1 10/-
U341	Specific paper feed location setting for printing function	Off/Off/Off/Off
U343	Switching between duplex/simplex copy mode	Off
U345	Setting the value for maintenance due indication	0

1-2-1 Option composition

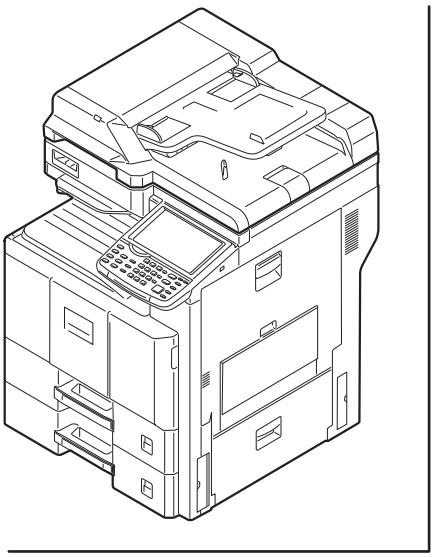

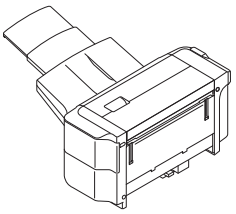

DF-470 (500 sheets)
(Document finisher)

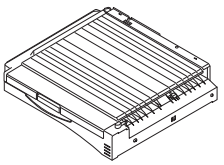

AK-470
(Bridge unit)

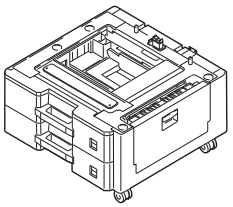

PF-790 (500 sheets x 2)
(Paper feeder)

IB-50 (Gigabit ethernet board)

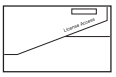

Data security kit (E)

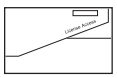

Internet FAX Kit (A)

FAX System (W)

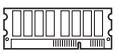

MM-16-128 (FAX Option Memory)

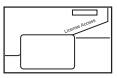

Card Authentication KIT (B)

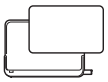

IC card reader

Card reader holder (B)

USB key board

UG-33 (ThinPrint Kit) *2

DT-730 (Original table)

Key counter

*2: 230V AC model only

1-2-3 Installing the key counter (option)

(1) Installing directly on the device

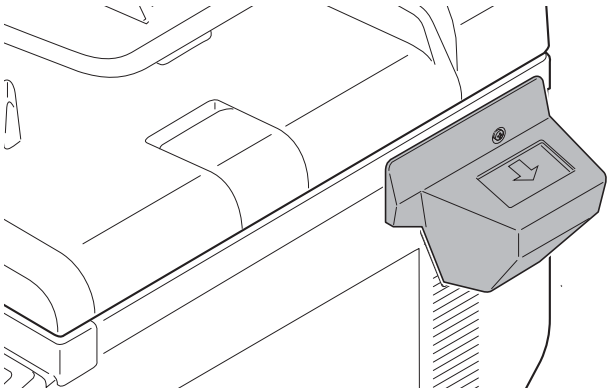

Key counter installation requires the following parts:

Parts	Quantity	Part.No.
Key counter	1	3025418011
Key counter set	1	302A369709
Key counter wire	1	302MV46090
Wire saddle A	8	7YZM610010++H01
Wire saddle B	1	7YZM610008++H01
Wire saddle C	1	7YZM610009++H01

Supplied parts of key counter set (302A369709):

Parts	Quantity	Part.No.
Key counter socket assembly	1	3029236241
Key counter cover retainer	1	302GR03010
Key counter retainer	1	302GR03020
Key counter cover	1	3066060011
Key counter mount	1	3066060041
Edging	2▲	7YZM210006++H01
Band	1*	M21AH010
M3 x 8 tap-tight P screw	1*	5MBTPB3008PW++R
M4 x 10 tap-tight P screw	2*	5MBTPB4010PW++R
M4 x 10 tap-tight S screw	2	5MBTPB4010TW++R
M3 x 6 bronze flat-head screw	2	7BB003306H
M4 x 20 tap-tight S screw	2*	7BB100420H

Parts	Quantity	Part.No.
M3 nut	1	7BC1003055++H01
M3 x 8 bronze binding screw	1*	B1B03080
M4 x 30 tap-tight S screw	1*	B1B54300
M4 x 6 chrome TP screw	5	B4A04060
M4 x 10 chrome TP screw	2	B4A04100

* : Not used in this model.
▲: One piece is used in this model.

Procedure

1. Press the power key on the operation panel to off. Make sure that the power indicator and the memory indicator are off before turning off the main power switch. And then unplug the power cable from the wall outlet.
2. Fit the key counter socket assembly to the key counter retainer using two screws and nut.
   Note: Take out the wire from the central portion of the key counter retainer, as shown in a figure.
3. Fit the key counter mount to the key counter cover using two screws.
4. Fit the key counter retainer to the key counter mount using two screws.

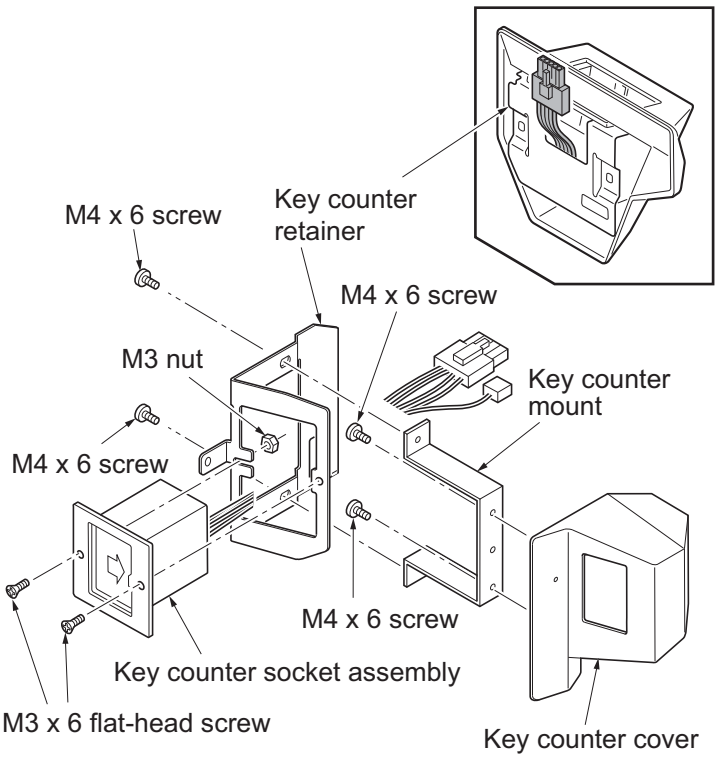

Figure 1-2-23

1. Remove two screws of the DP interface connector and then remove the DP interface connector.
2. Remove the DP.
3. Remove seven screws.
4. Pull the rear cover upwards and then release three hooks.
5. Remove the rear cover.

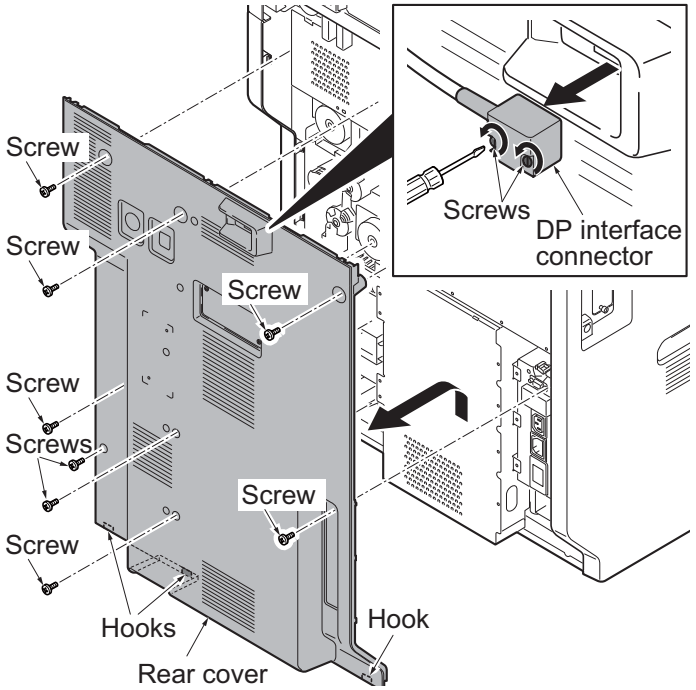

Figure 1-2-24

6. Remove two screws and then remove the ISU right cover.
7. Remove the right upper cover.

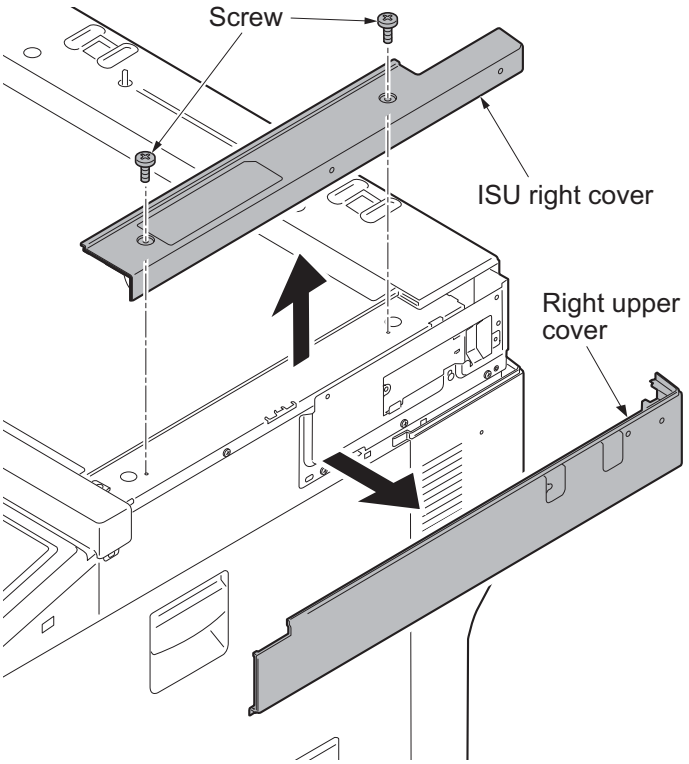

Figure 1-2-25

8. Cut out the aperture plate (right side) on the right upper cover using nippers.

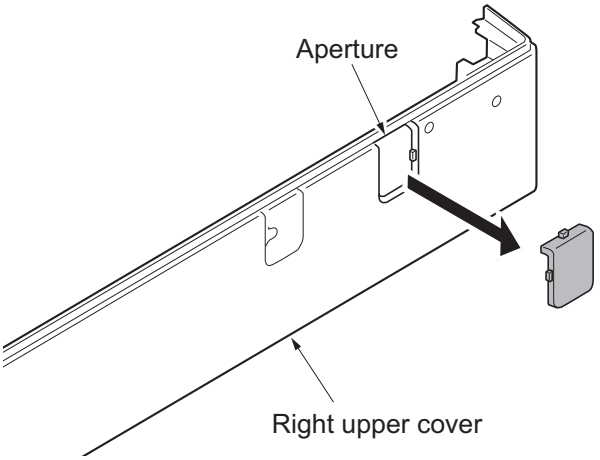

Figure 1-2-26

9. Remove fifteen screws and then remove the controller box cover.

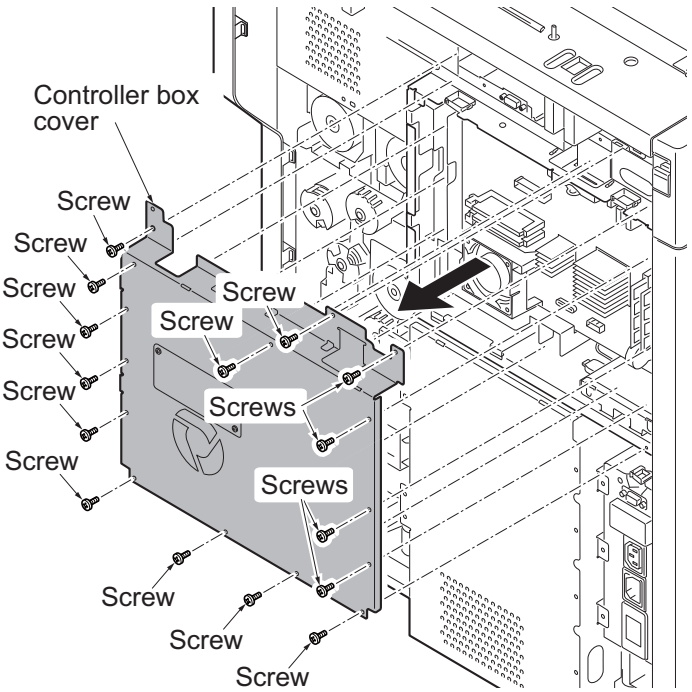

Figure 1-2-27

10. Remove four wire holders.
11. Remove two connector (YC1 and YC27) from the main PWB.
12. Remove two screws and then remove the hard disk.
    * : Be careful not to give excessive vibration and shock to a hard disk for breakage prevention.

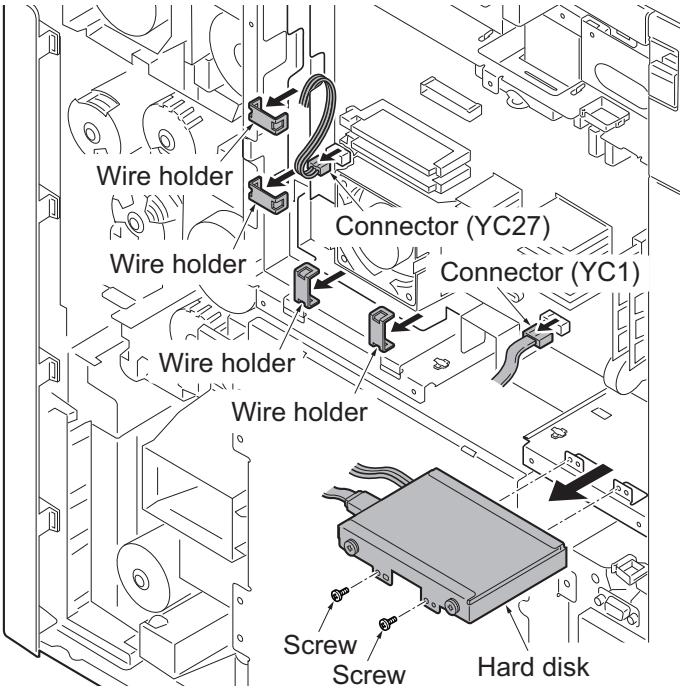

Figure 1-2-28

13. Attaches four wire saddle to the controller box and four wire saddle to the IH box cover.
    Then release the hook of all wire saddles.
14. Release the hook of wire saddle A (standard).

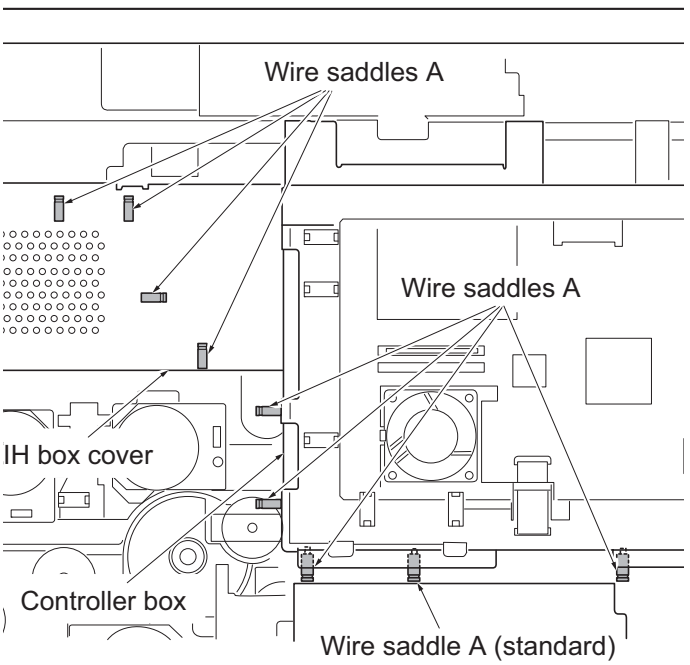

Figure 1-2-29

15. Remove two screws and then remove the ISU rear cover.

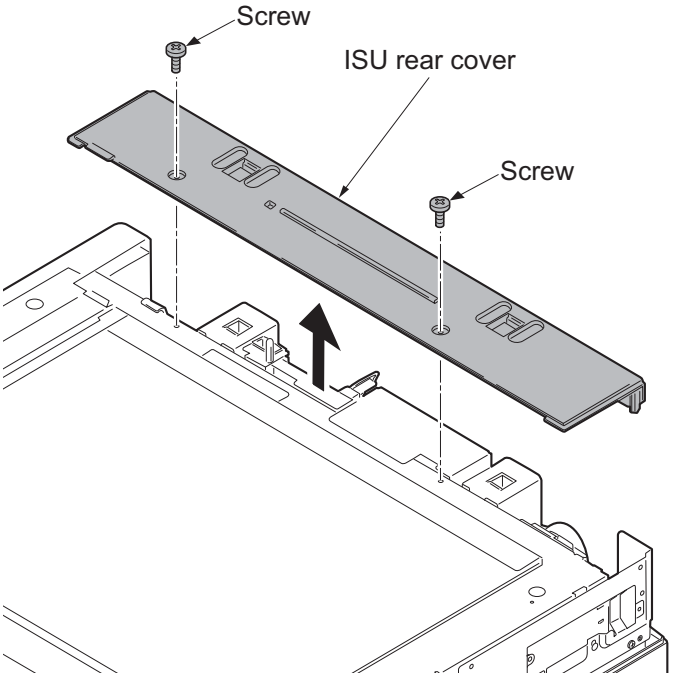

Figure 1-2-30

16. Attaches the wire saddle B and the wire saddle C to right upper section of the machine and then release two hooks of the thir.
17. Attach the edging to the aperture part.

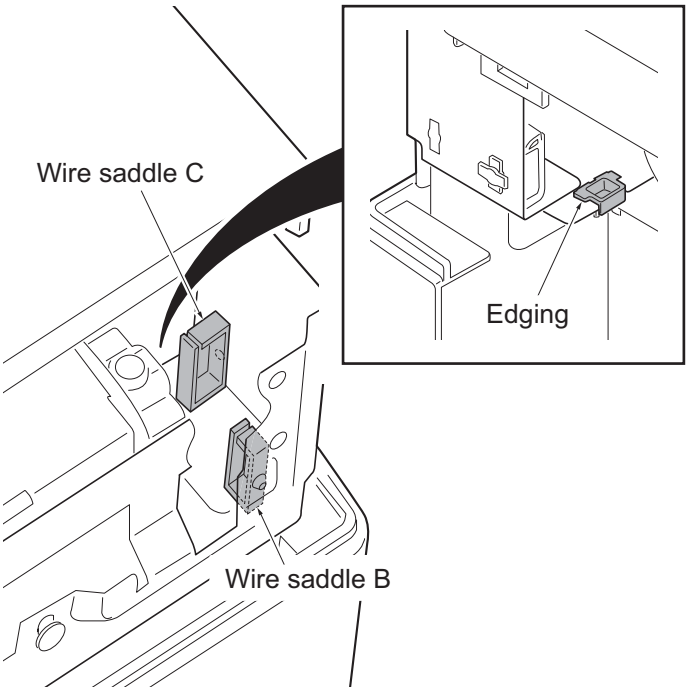

Figure 1-2-31

18. Pass the key counter wire through the wire saddle B and the wire saddle C and then pull out from the aperture part.
19. Pass the key counter wire through the edging.
    Note: Put a binding band on the front side of the wire saddle C.

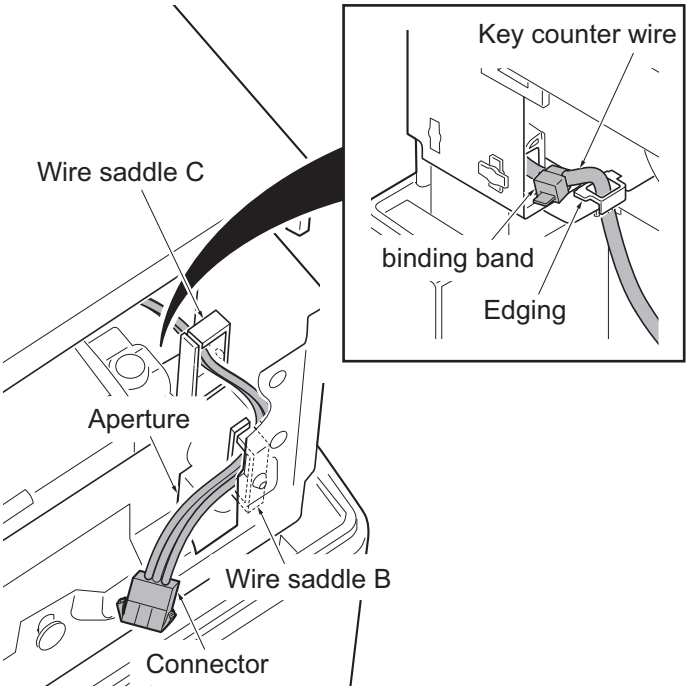

Figure 1-2-32

20. Pass the connector of the key counter wire from Below through the aperture in the controller box and then connect to the connector (YC24) of the video PWB.
21. Fix the key counter wire using nine wire saddle A.
    Note: When a key counter electric wire slackens, bundle and fix to X position.

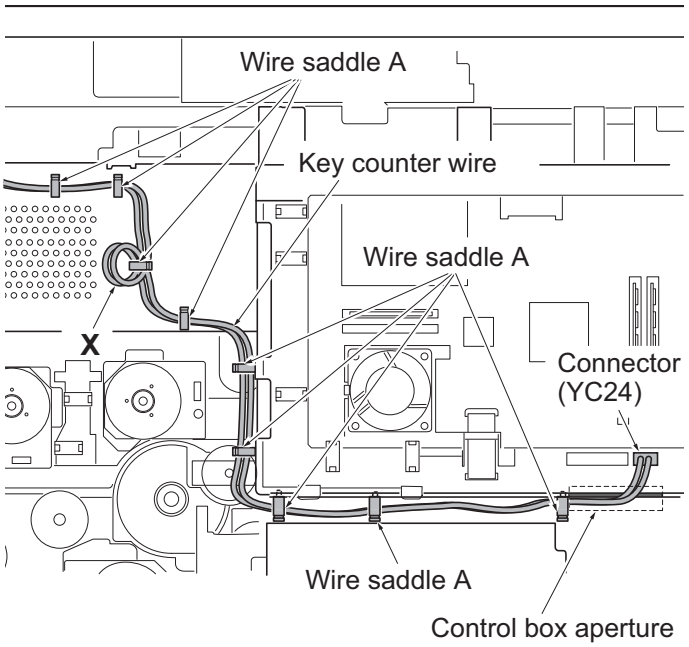

Figure 1-2-33

22. Refit the hard disk using two screws.
23. Connect two connectors to the connector (YC1 and YC27) of main PWB.
24. Put the wire in the wire guide and then fix it using four wire holders.
25. Fit the controller box cover using fifteen screws.
26. Fit the ISU rear cover using two screws.
27. Fit the right upper cover.
    Note: Pass the connector of the key counter wire through the aperture (right side) in the right upper cover.
    Note: Be careful not to put a key counter electric wire with the upper right cover.
28. Fit the ISU right cover using two screws.

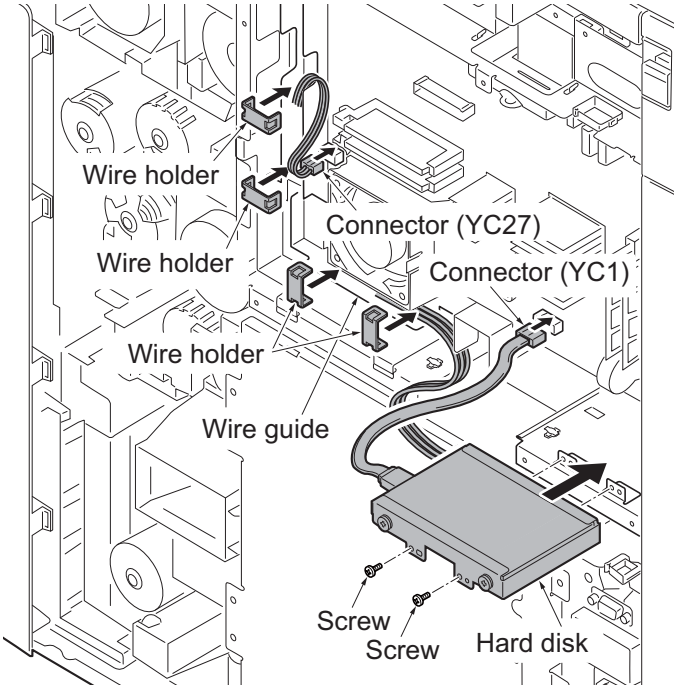

Figure 1-2-34

29. Insert the projection of the key counter cover retainer in the aperture of the right upper cover.
30. Fit the key counter cover retainer using the two M4 x 10 screws.

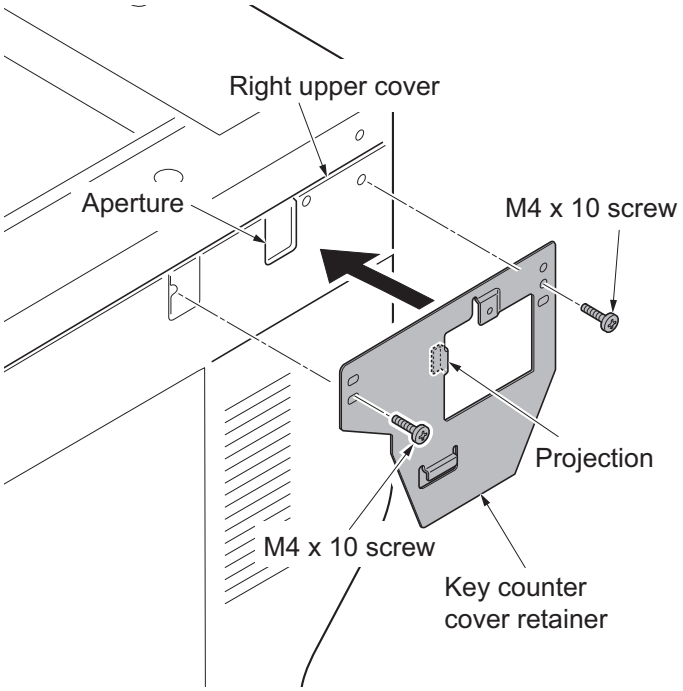

Figure 1-2-35

31. Connect the key counter signal cable to the key counter wire.
32. Fit the key counter cover to the machine using the M4 x 6 screw.
33. Fit the rear cover using seven screws.?
34. Put DP on the machine. connect the DP interface connector and then fit using two screws.
35. Insert the key counter into the key counter socket assembly.
36. Turn the main power switch on and enter the maintenance mode.
37. Run maintenance item U204 and select [Key-Counter] (see page P.1-3-83).
38. Exit the maintenance mode.
39. Check that the message requesting the key counter to be inserted is displayed on the touch panel when the key counter is pulled out.
40. Check that the counter counts up as copies are made.

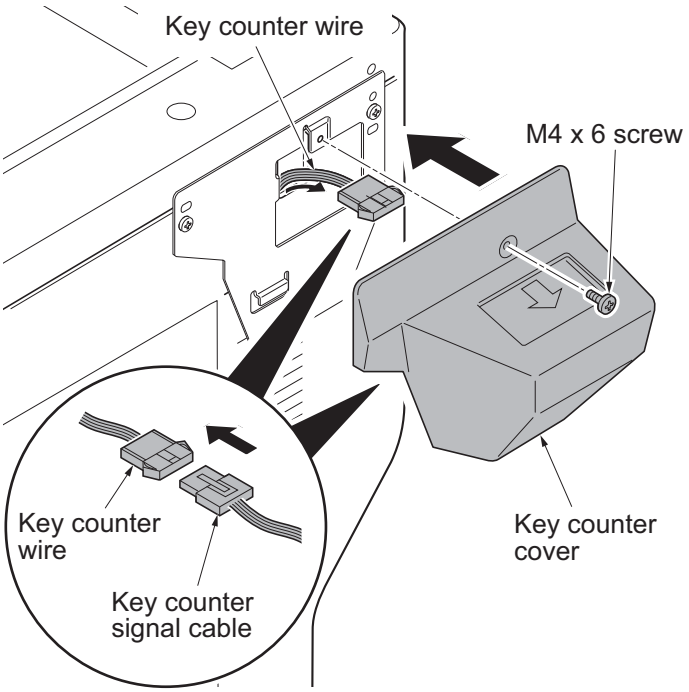

Figure 1-2-36

(2) Mounting on the document table

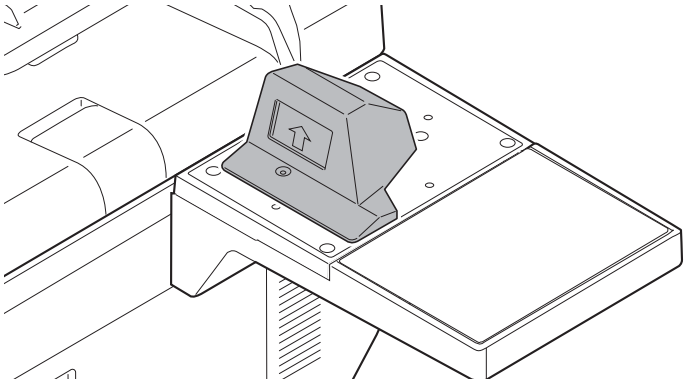

Key counter installation requires the following parts

Parts	Quantity	Part.No.
Key counter	1	3025418011
Key counter set	1	302A369709
Key counter wire	1	302MV46090
Document table	1	1902LC0UN1(option)
Wire saddle A	8	7YZM610010++H01
Wire saddle B	1	7YZM610008++H01
Wire saddle C	1	7YZM610009++H01

Supplied parts of key counter set (302A369709):

Parts	Quantity	Part.No.
Key counter socket assembly	1	3029236241
Key counter cover retainer	1	302GR03010
Key counter retainer	1	302GR03020
Key counter cover	1	3066060011
Key counter mount	1	3066060041
Edging	2▲	7YZM210006++H01
Band	1*	M21AH010
M3 x 8 tap-tight P screw	1*	5MBTPB3008PW++R
M4 x 10 tap-tight P screw	2*	5MBTPB4010PW++R
M4 x 10 tap-tight S screw	2*	5MBTPB4010TW++R
M3 x 6 bronze flat-head screw	2	7BB003306H
M4 x 20 tap-tight S screw	2	7BB100420H
M3 nut	1	7BC1003055++H01
M3 x 8 bronze binding screw	1*	B1B03080
M4 x 30 tap-tight S screw	1*	B1B54300
M4 x 6 chrome TP screw	5	B4A04060

Parts	Quantity	Part.No.
M4 x 10 chrome TP screw	2*	B4A04100

Supplied parts of document table (1902LC0UN1)

Parts	Quantity	Part.No.
Tray stay	1	-
Tray mount	1	-
Tray cover	1	302LC04600
Tray lower cover	1	302LC04710
Tray retainer	1*	-
Sheet	2▲	302LC04660
Pin	2	303NS24410
M4 nut	2*	3CY06030
M4 x 8 screw	7▼	7BB180408H
M4 x 10 screw	2	7BB607410H
M4 x 14 screw	2*	7BB607414H

* : Not used in this model.
▲: One piece is used in this model.
▼: Six pieces are used in this model.

Procedure

1. Press the power key on the operation panel to off. Make sure that the power indicator and the memory indicator are off before turning off the main power switch. And then unplug the power cable from the wall outlet.
2. Fit the key counter socket assembly to the key counter retainer using two screws and nut.
   Note: Take out the wire from the central portion of the key counter retainer, as shown in a figure.
3. Fit the key counter mount to the key counter cover using two screws.
4. Fit the key counter retainer to the key counter mount using two screws.

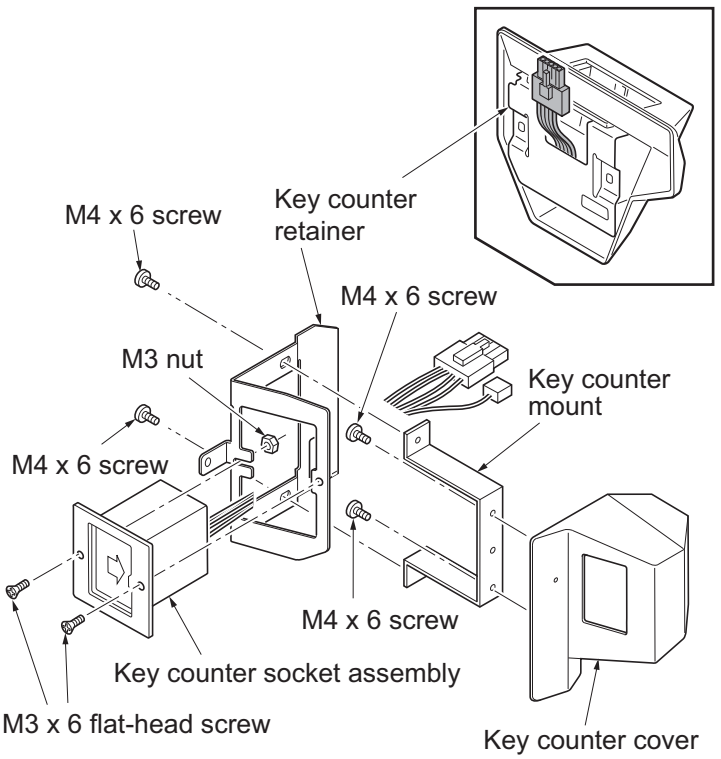

Figure 1-2-37

1. Remove two screws of the DP interface connector and then remove the DP interface connector.
2. Remove the DP.
3. Remove seven screws.
4. Pull the rear cover upwards and then release three hooks.
5. Remove the rear cover.

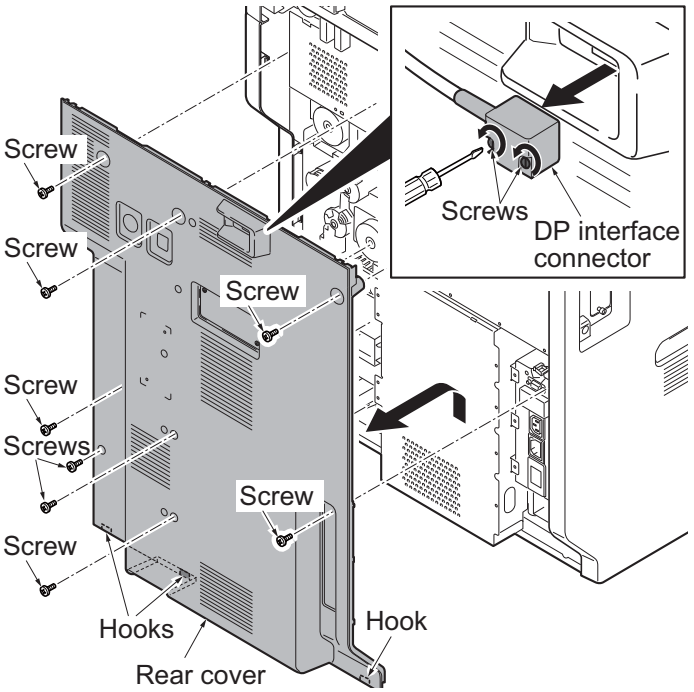

Figure 1-2-38

6. Remove two screws and then remove the ISU right cover.
7. Remove the right upper cover.

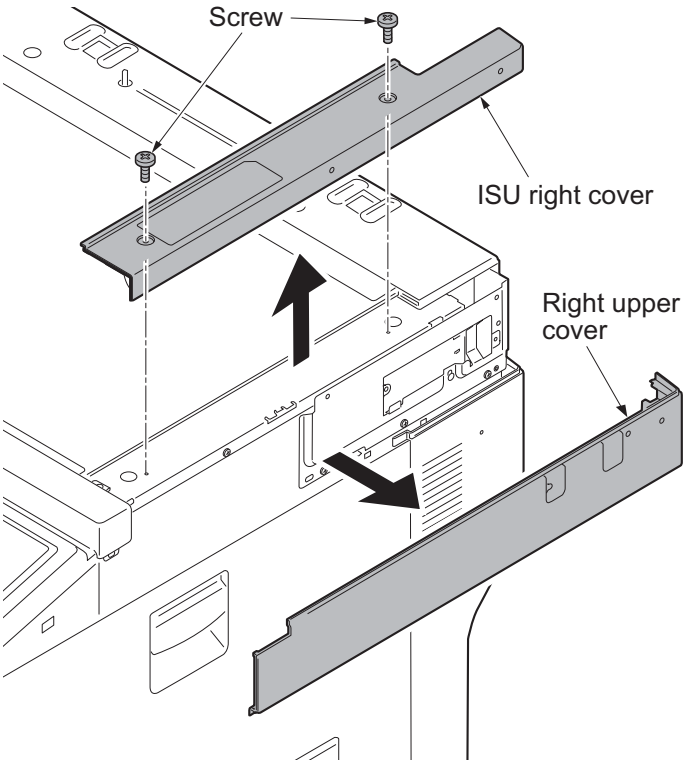

Figure 1-2-39

8. Cut out four ribs of the aperture plate (left side) on the right upper cover using nippers.
   Note: Cut off the rib (lower part) certainly so that a projection does not remain.

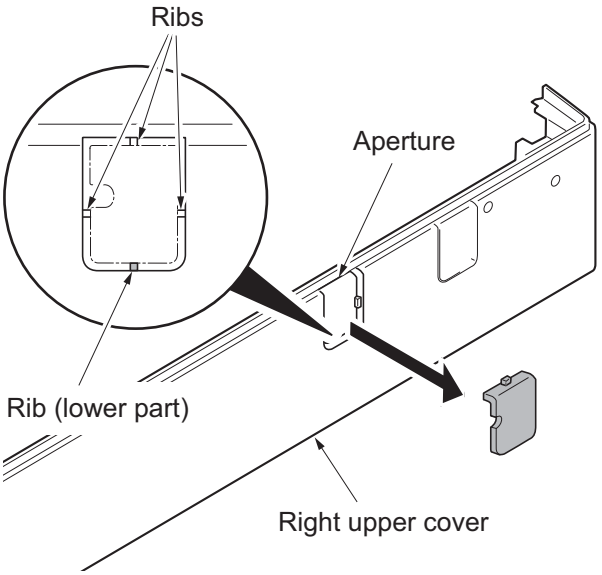

Figure 1-2-40

9. Remove fifteen screws and then remove the controller box cover.

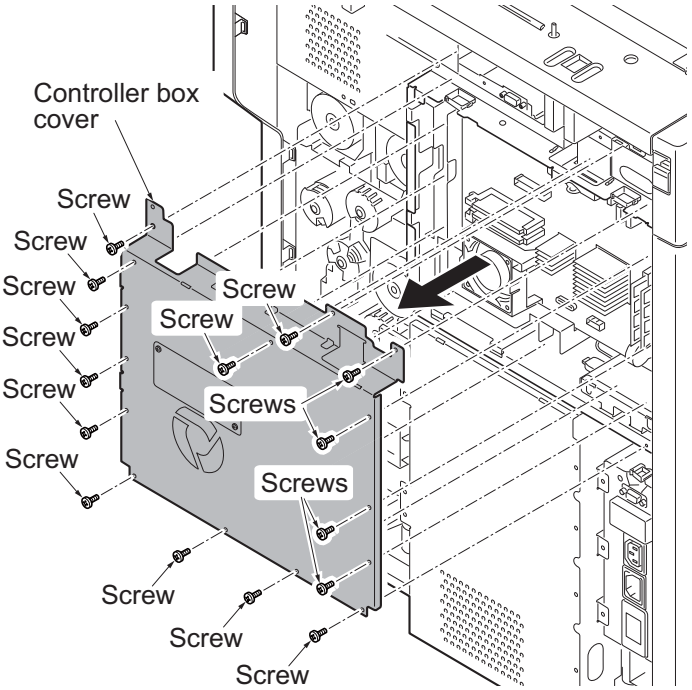

Figure 1-2-41

10. Remove four wire holders.
11. Remove two connector (YC1 and YC27) from the main PWB.
12. Remove two screws and then remove the hard disk.
    Caution: Be careful not to give excessive vibration and shock to a hard disk for breakage prevention.

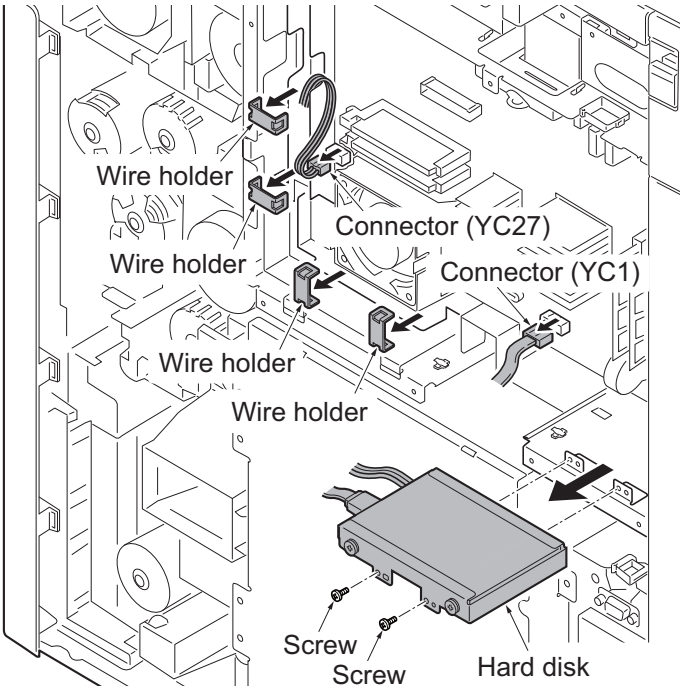

Figure 1-2-42

13. Attaches four wire saddle to the controller box and four wire saddle to the IH box cover.
    Then release the hook of all wire saddles.
14. Release the hook of wire saddle A (standard).

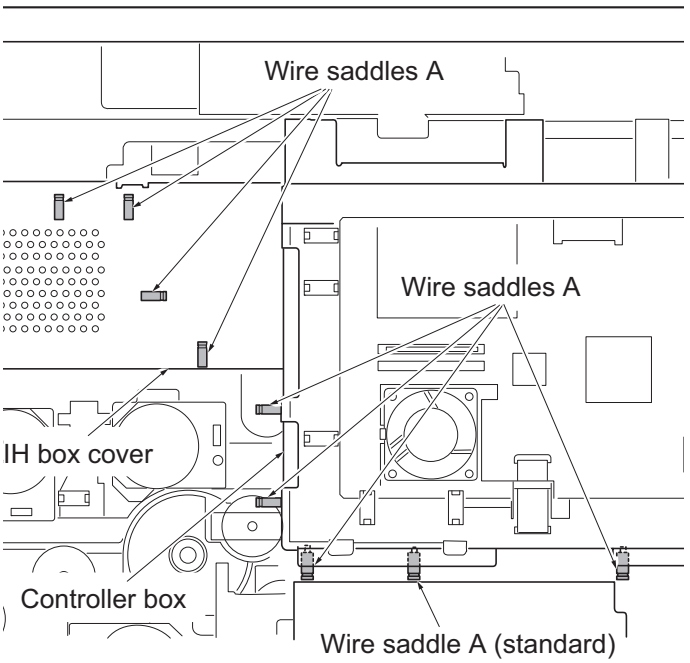

Figure 1-2-43

15. Remove two screws and then remove the ISU rear cover.

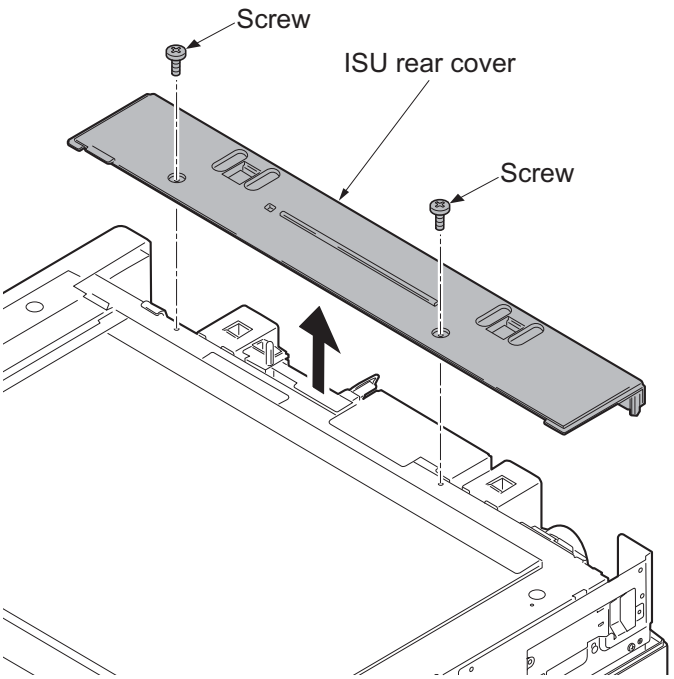

Figure 1-2-44

16. Attaches the wire saddle B and the wire saddle C to right upper section of the machine and then release two hooks of the thir.
17. Attach the edging to the aperture part.

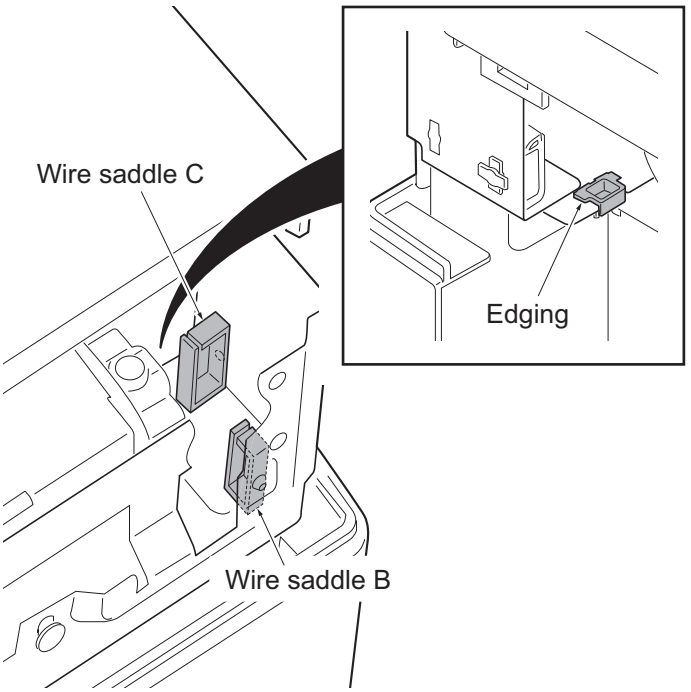

Figure 1-2-45

18. Pass the key counter wire through the wire saddle B and the wire saddle C and then pull out from the aperture part.
    Note: Put a binding band on the out side of the wire saddle B.
19. Pass the key counter wire through the edging.

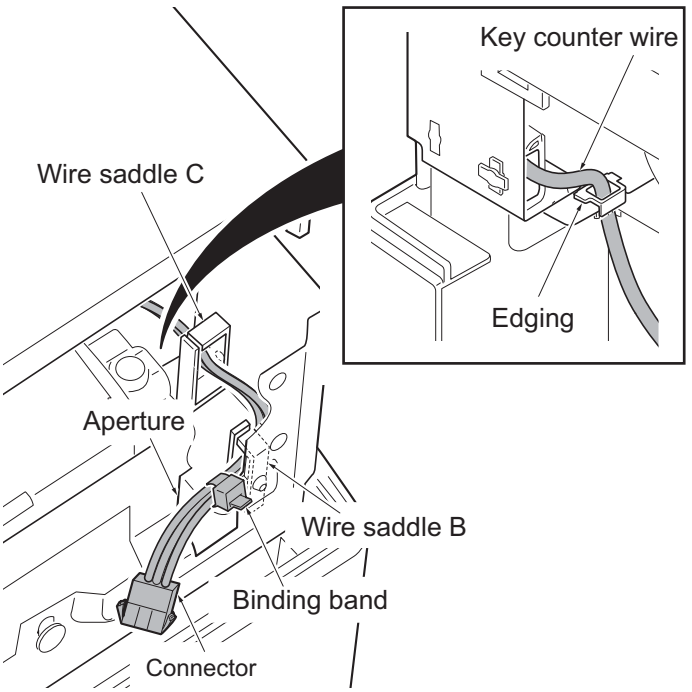

Figure 1-2-46

20. Pass the connector of the key counter wire from Below through the aperture in the controller box and then connect to the connector (YC24) of the video PWB.
21. Fix the key counter wire by using nine wire saddle A.
    Note: When a key counter electric wire slackens, bundle and fix to X position.

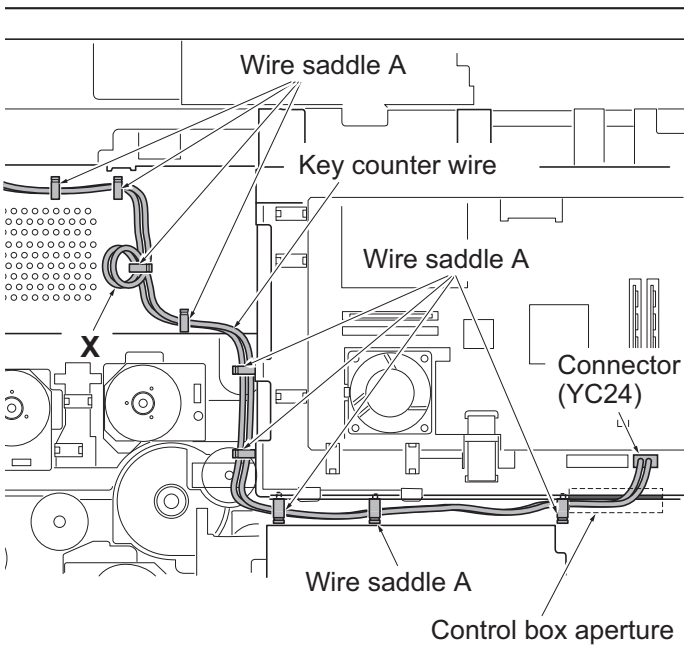

Figure 1-2-47

22. Refit the hard disk using two screws.
23. Connect two connectors to the connector (YC1 and YC27) of main PWB.
24. Put the wire in the wire guide and then fix it using four wire holders.
25. Fit the controller box cover using fifteen screws.
26. Fit the ISU rear cover using two screws.
27. Fit the right upper cover.
    Note: Pass the connector of the key counter wire through the aperture (right side) in the right upper cover.
    Note: Be careful not to put a key counter electric wire with the upper right cover.
28. Fit the ISU right cover using two screws.

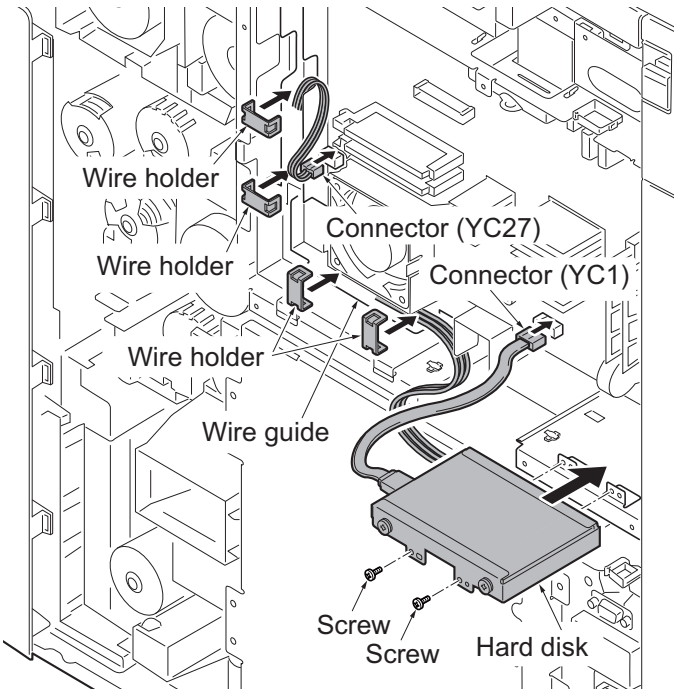

Figure 1-2-48

29. Fit the tray stay to the ISU right cover using two screws.

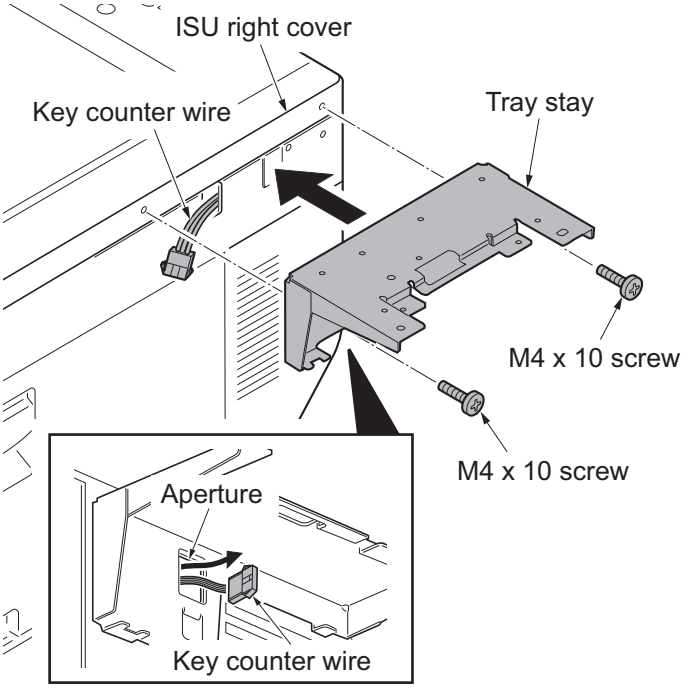

Figure 1-2-49

30. Snap in the tray mount to the tray stay and fix using two screws.

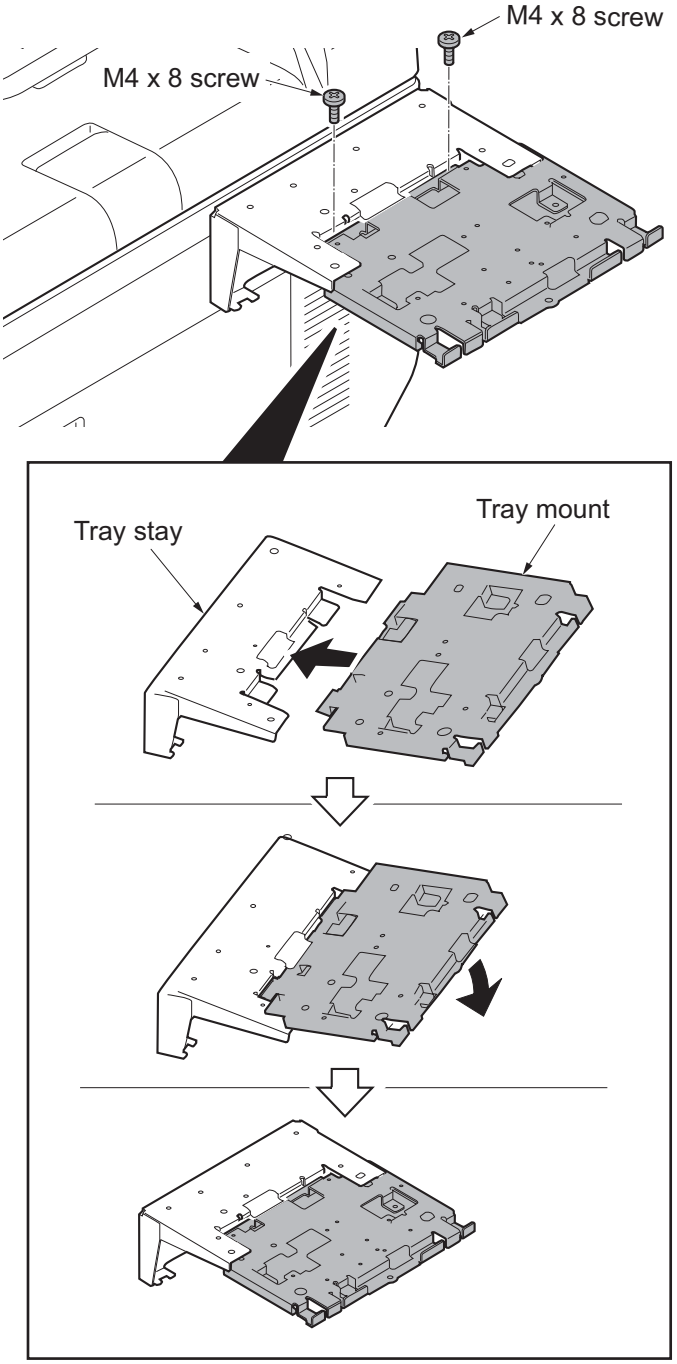

Figure 1-2-50

31. Cut out the aperture plate on the tray cover using nippers.
32. Fit the tray cover to the tray stay using four screws.

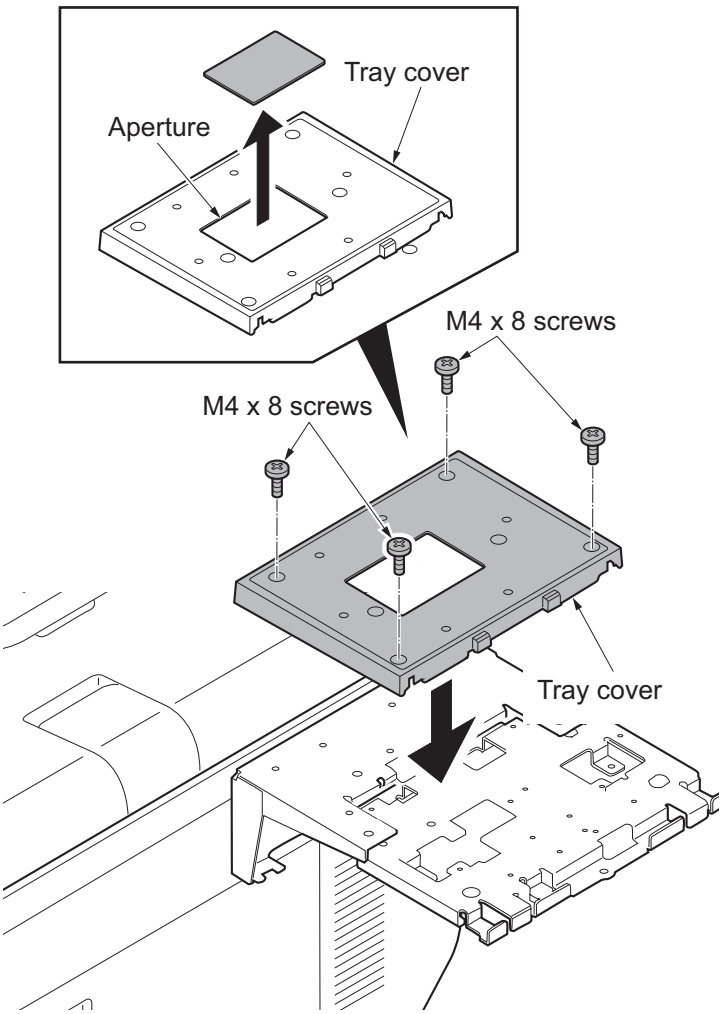

Figure 1-2-51

33. Fit the key counter cover retainer using two screws.

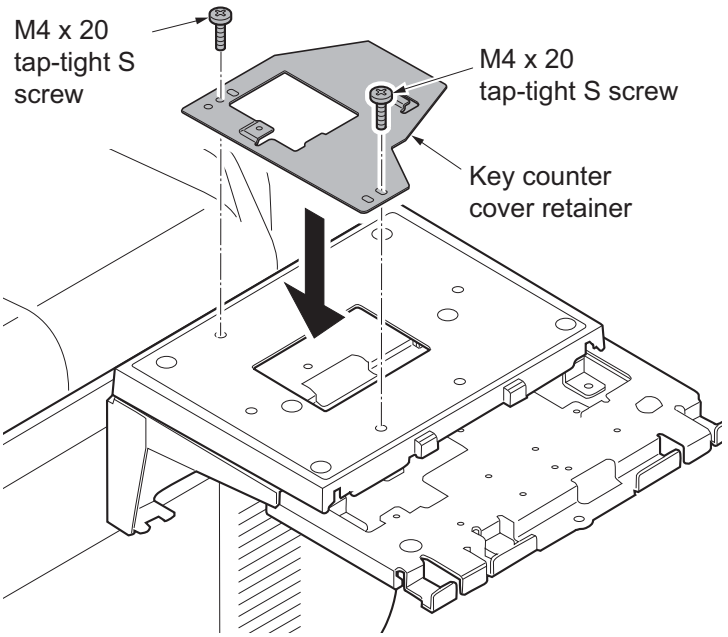

Figure 1-2-52

34. Pass the key counter signal cable through the aperture in the document table.
35. Fit the key counter cover to the document table using the screw.
36. Connect the key counter signal cable to the key counter wire.

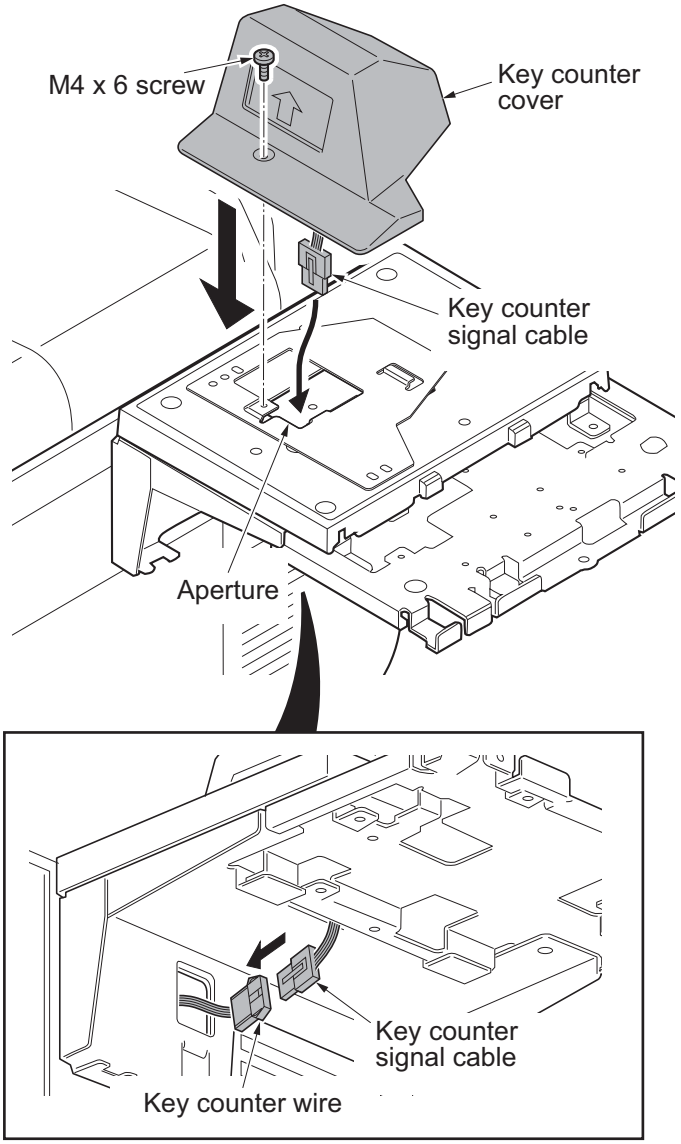

Figure 1-2-53

37. Fit the tray lower cover.
    Note: Install the key counter signal cable and key counter wire so that they are held behind the tray lower cover.

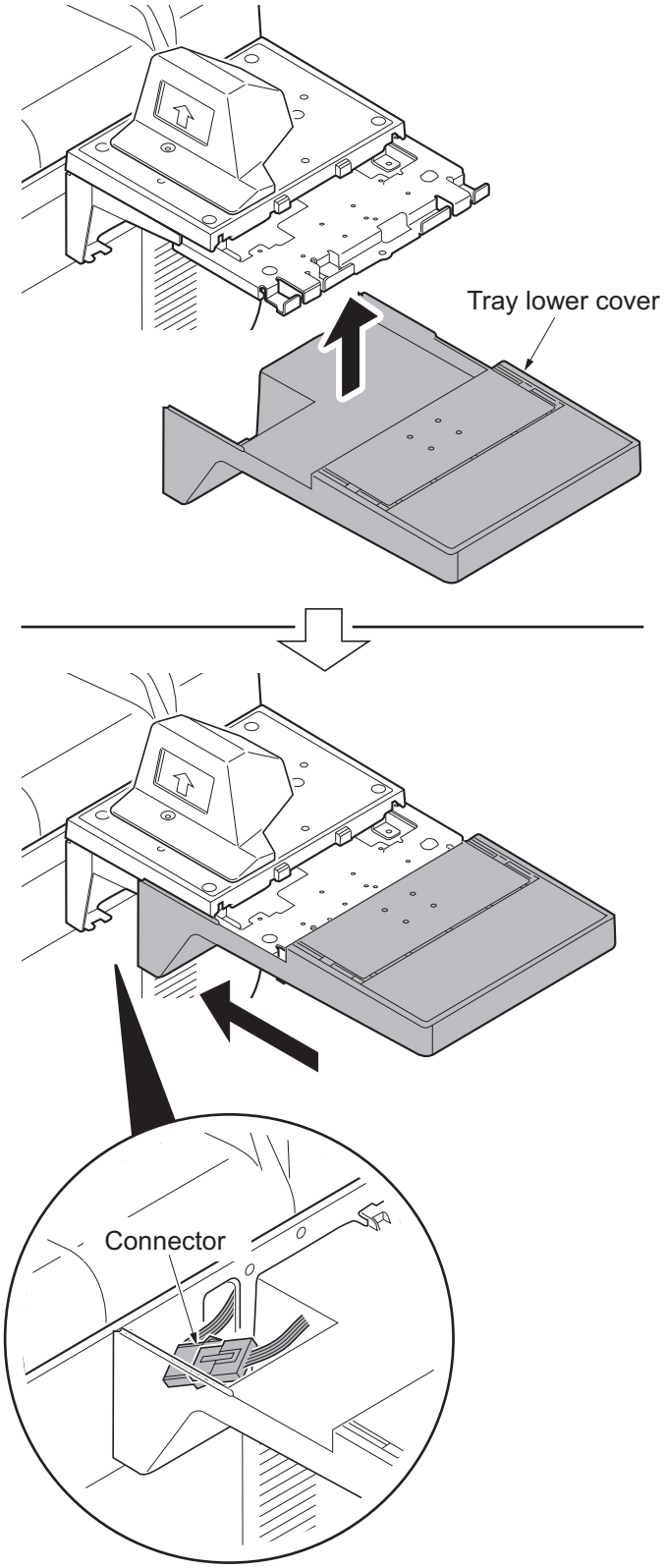

Figure 1-2-54

38. Secure the tray lower cover with two pins.

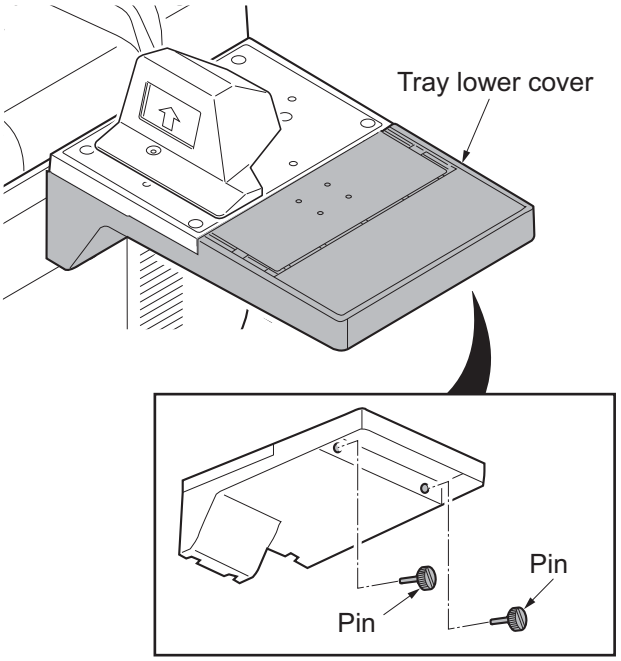

Figure 1-2-55

39. Adhere the sheet onto right side of the document table.
40. Fit the rear cover using seven screws.?
41. Put DP on the machine. connect the DP interface connector and then fit using two screws.
42. Insert the key counter into the key counter socket assembly.
43. Turn the main power switch on and enter the maintenance mode.
44. Run maintenance item U204 and select [Key-Counter] (see page P.1-3-83).
45. Exit the maintenance mode.
46. Check that the message requesting the key counter to be inserted is displayed on the touch panel when the key counter is pulled out.
47. Check that the counter counts up as copies are made.

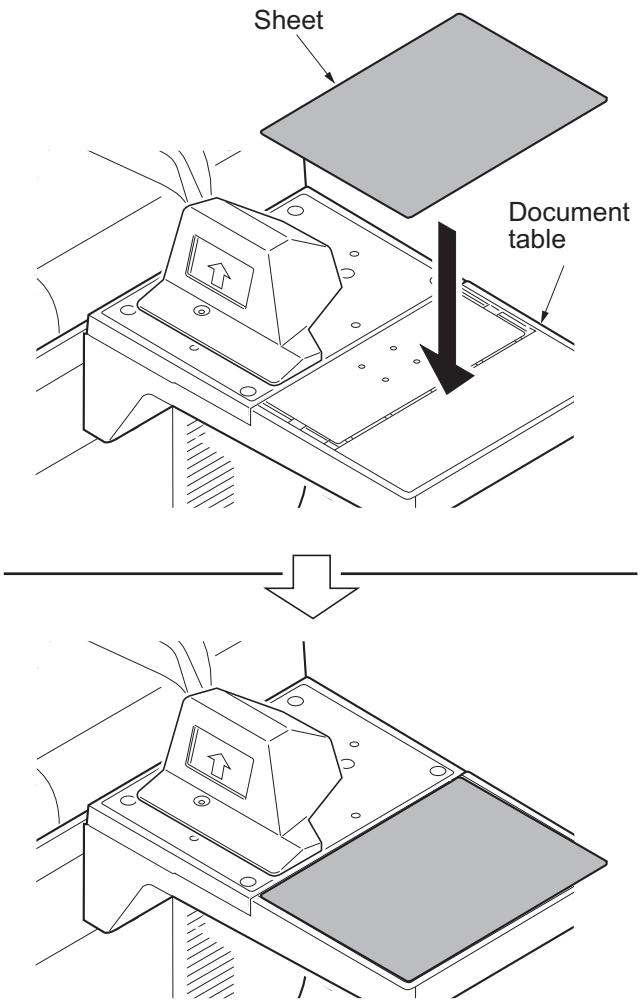

Figure 1-2-56

1-2-4 Installing the gigabit ethernet board (option)

Gigabit ethernet board installation requires the following parts:

Parts	Quantity	Part.No.
Gigabit ethernet board	1	1505JV0UN0 (option)

Procedure

1. Press the power key on the operation panel to off. Make sure that the power indicator and the memory indicator are off before turning off the main power switch. And then unplug the power cable from the wall outlet.
2. Remove two pins and then remove the slot cover of the OPT2.

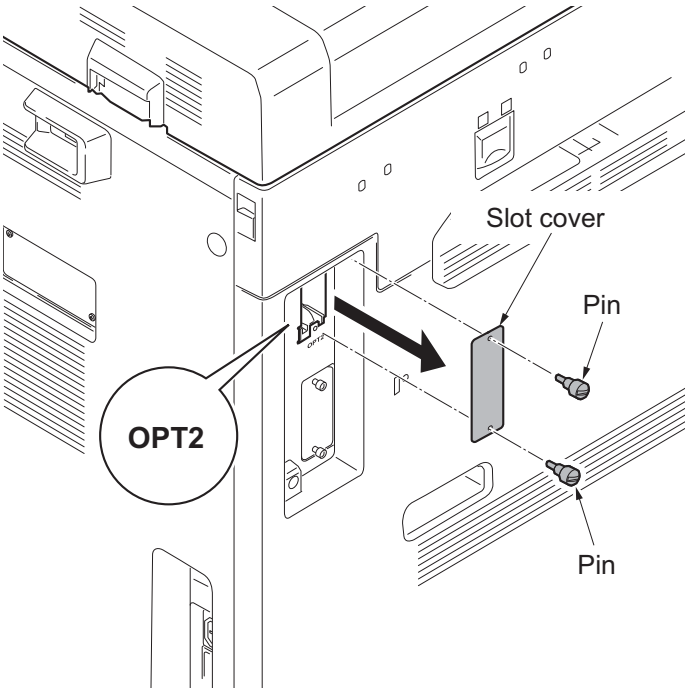

Figure 1-2-57

3. Insert the gigabit ethernet board along the groove in OPT2 and secure the board with two pins that have been removed in step 2.
   Caution: Do not directly touch the gigabit ethernet board terminal.
   Hold the top and bottom of the gigabit ethernet board, or the projection of the board to insert the gigabit ethernet board.

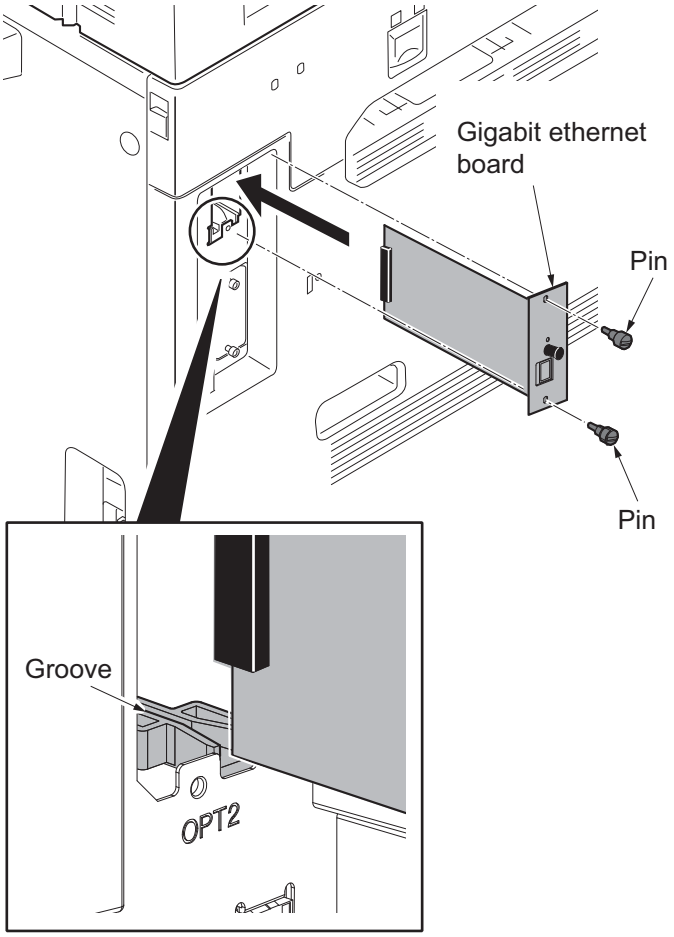

Figure 1-2-58

4. Plug the modular connector cable into the line terminal,

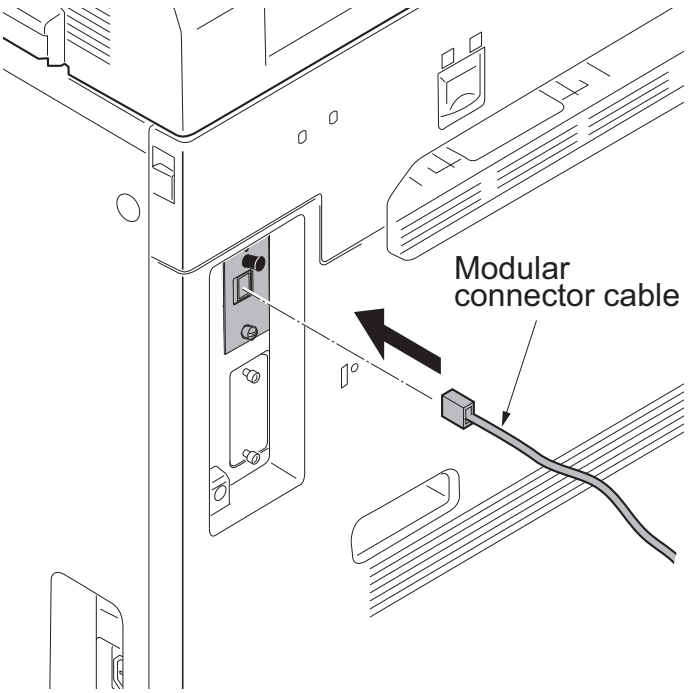

Figure 1-2-59

1-2-5 Installing the IC card reader holder (option)

IC card reader holder installation requires the following parts:

Parts	Quantity	Part.No.
IC card reader holder	1	1709AD0UN0 (option)

Supplied parts of IC card reader holder (1709AD0UN0):

Parts	Quantity	Part.No.
Card reader case	1	-
Card reader base	1	-
Card reader mount	1	-
Card reader tray	1	-
USB Wire (For extension)	1	-
Pin	3	303NS24410
Clamp	6	7YZM690002++H01

The card reader base, card reader mount, and the pin are packaged as an assembled kit.

Procedure

1. Press the power key on the operation panel to off. Make sure that the power indicator and the memory indicator are off before turning off the main power switch. And then unplug the power cable from the wall outlet.
2. Remove the pin of the card reader base and then remove the card reader mount.

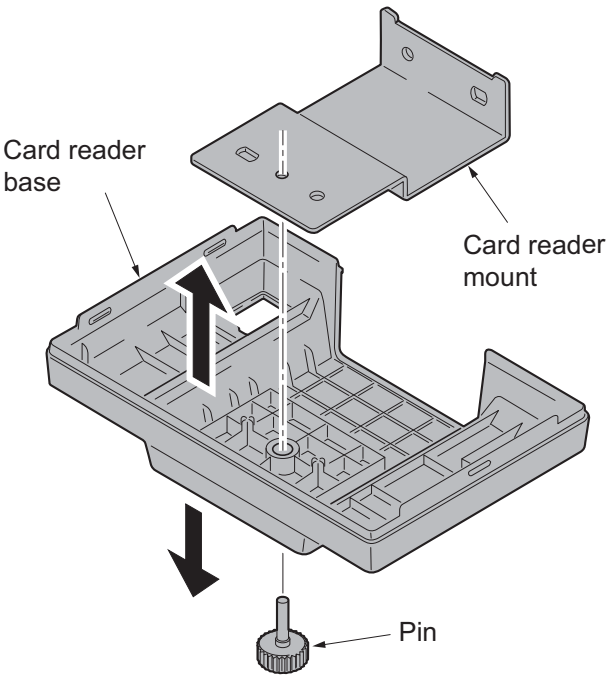

Figure 1-2-60

3. Fit the card reader mount to left upper section of the machine using two pins.

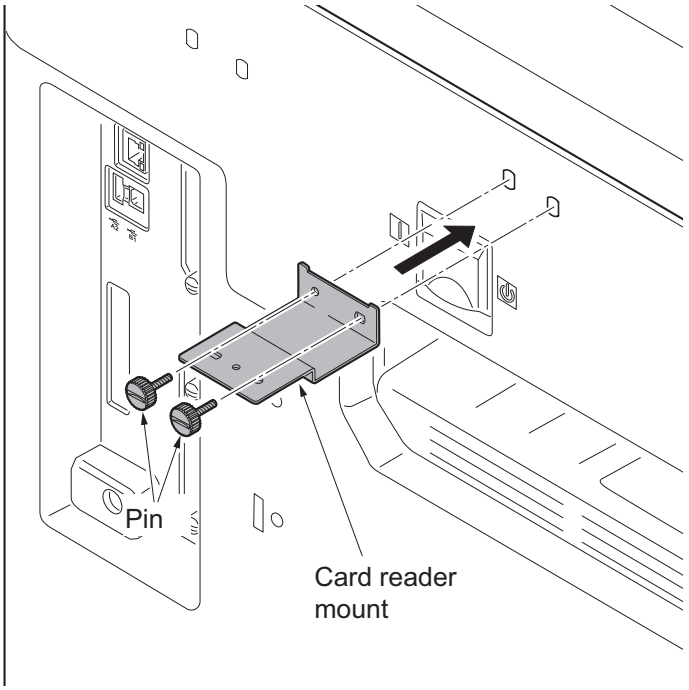

Figure 1-2-61

4. Refit the card reader base to card reader mount using the pin removed in step 2.

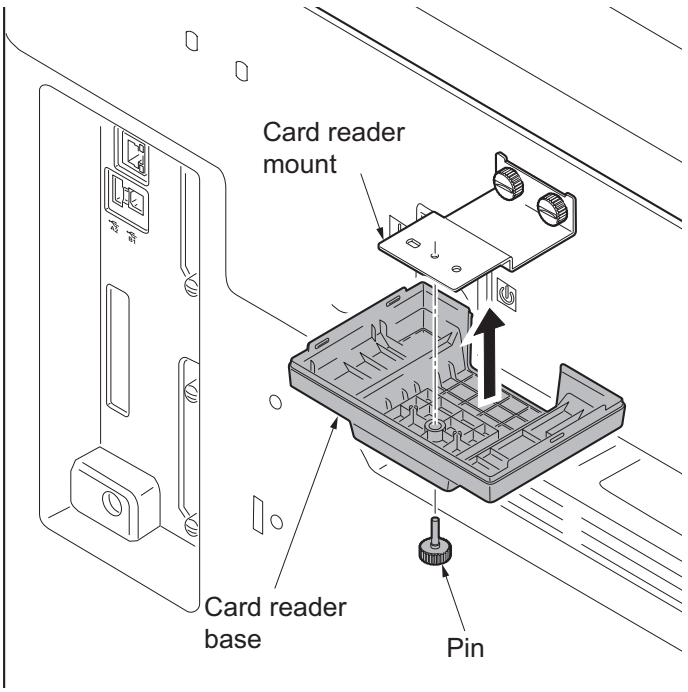

Figure 1-2-62

5. Fit the card reader tray to the card reader base.
   Choose the direction of mounting the IC card reader according to the depth of the reader.
   10mm to 22mm: Face the mark A upwards.
   Less than 10mm: Face the mark B upwards.

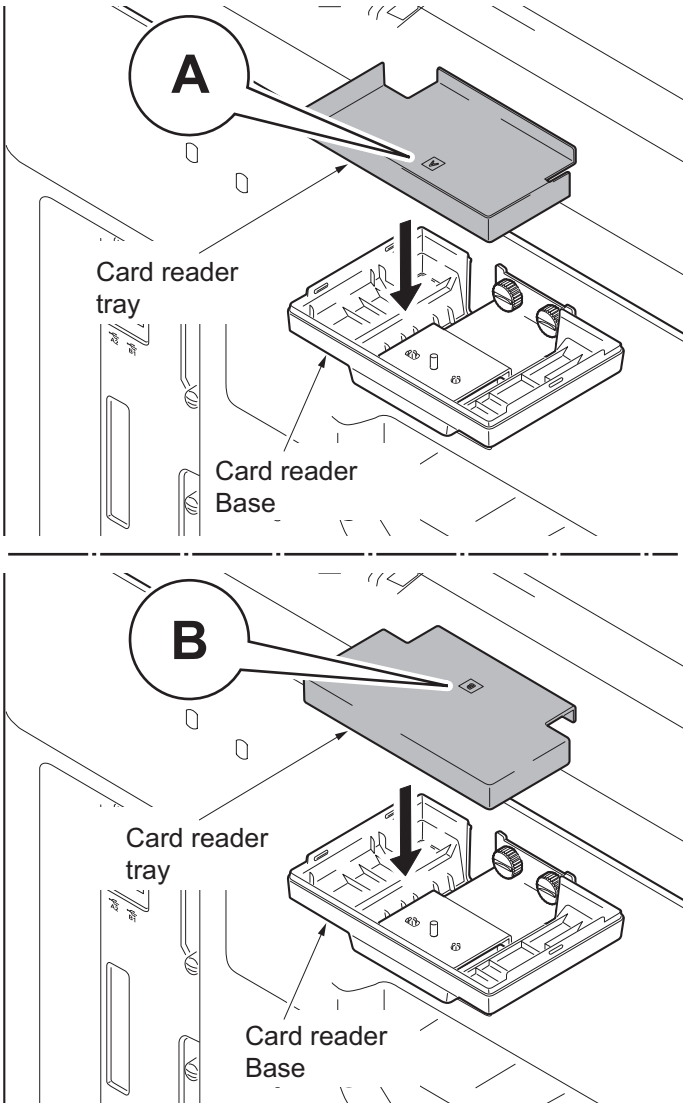

Figure 1-2-63

6. Route the USB wire of the IC card reader through the aperture of the card reader base and mount the IC card reader on the card reader base.

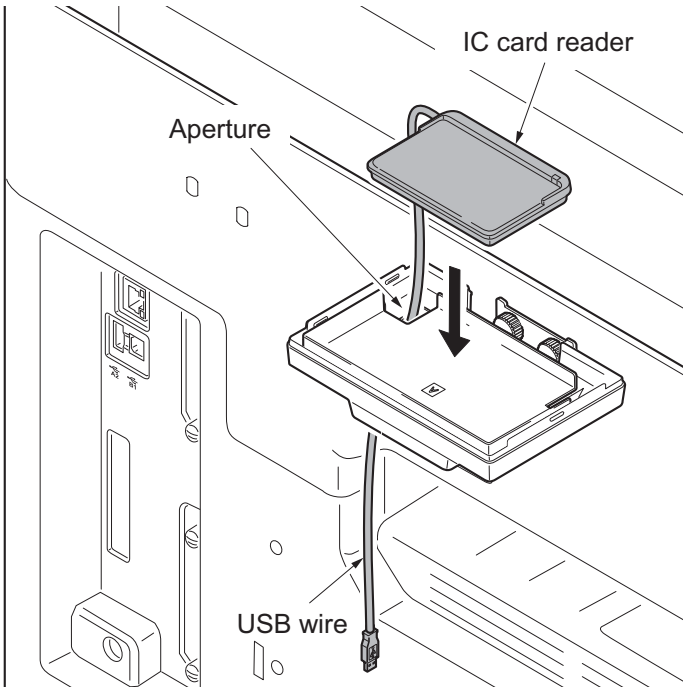

Figure 1-2-64

7. Hook the two hooks of the card reader case to fit the card reader case to the card reader base.
   Press its top until it clicks in.

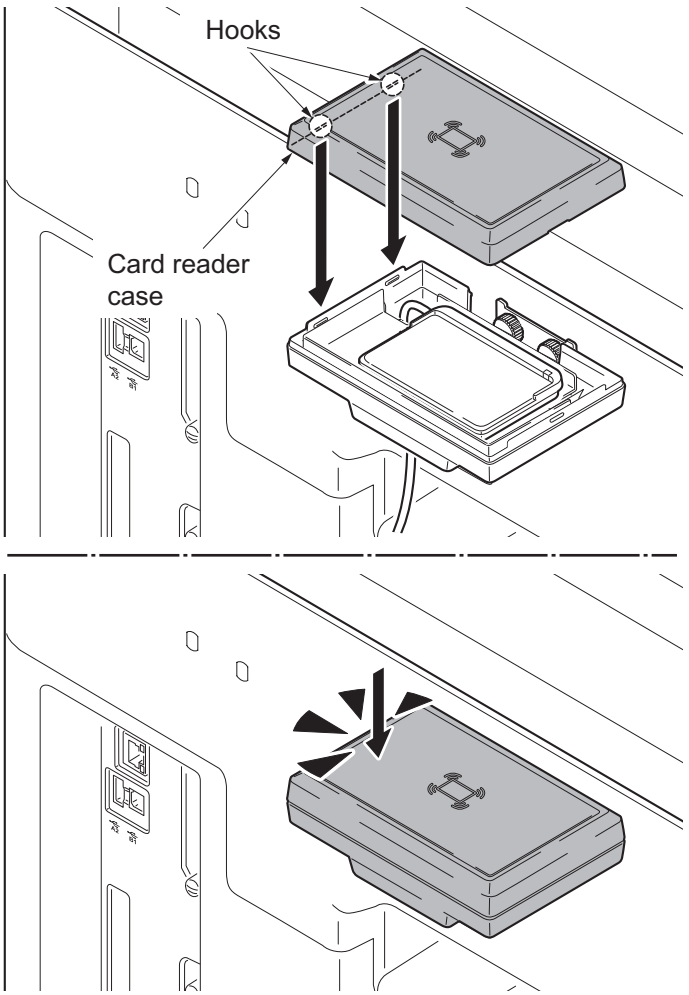

Figure 1-2-65

8. Fit six clamps.

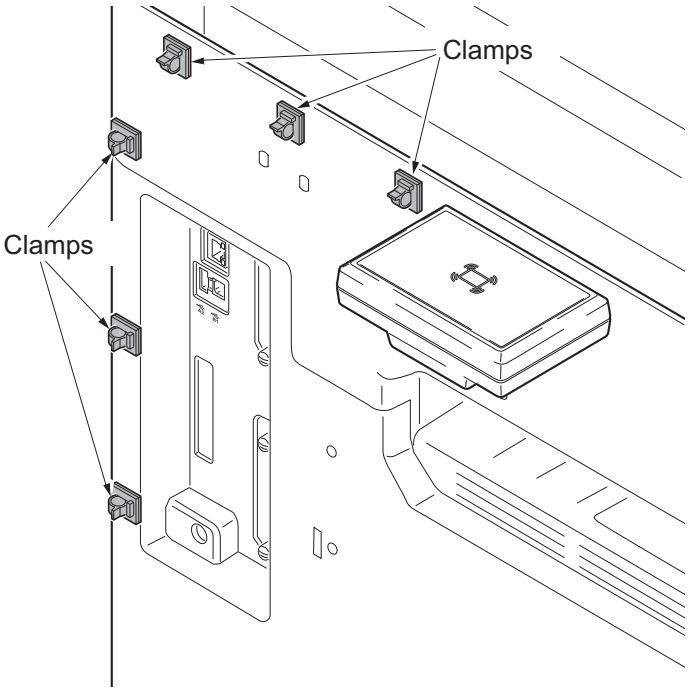

Figure 1-2-66

9. Pass the USB wire of the IC card reader through six clamps and then fasten the wire.
10. Connect the USB wire to the machine.

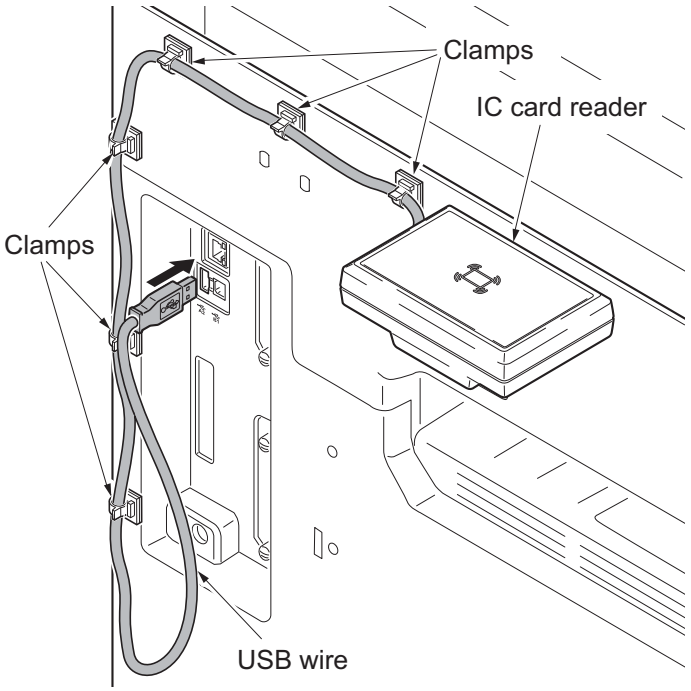

Figure 1-2-67

Enabling IC Card Authentication

Precautions

To install the optional function, you need the License Key. Please access the designated website of your dealer or service representative, and register “Machine No.” indicated on your machine and “Product ID” indicated on the License Certificate supplied with the product to issue the License Key.

1. Turn the main power switch on.
2. Press the System Menu key and then press [System].
   If user login administration is disabled, the user authentication screen appears.
   Enter your login user name and password and then press [Login]. For this, you need to log in with administrator privileges.
3. Press [Next] of Optional Function.
4. Select CARD AUTHENTICATION KIT(B) and press [Activate].
5. The License Key entry screen is displayed.
   Enter the License Key using the numeric keys and press [Official].
6. Confirm the product name CARD AUTHENTICATION KIT(B) and press [Yes].
7. To use a SSFC card, run maintenance mode U222 and set SSFC.

This page is intentionally left blank.

1-3-1 Maintenance mode

The machine is equipped with a maintenance function which can be used to maintain and service the machine.

(1) Executing a maintenance item

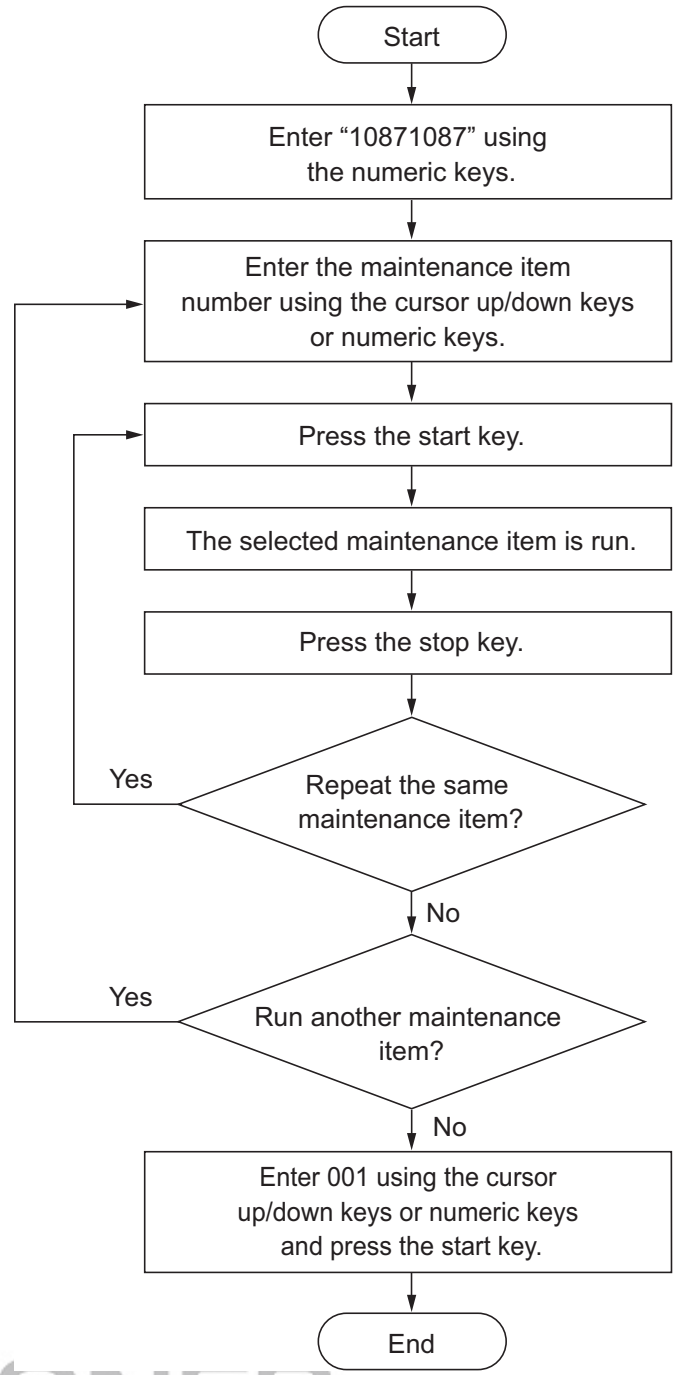

・・・・・ Maintenance mode is entered.

・・・・・ The maintenance item is selected.

・・・・・ Maintenance mode is exited.

(2) Maintenance modes item list

Section	Item No.	Content of maintenance item	Initial setting
General	U000	Outputting an own-status report	-
	U001	Exiting the maintenance mode	-
	U002	Setting the factory default data	-
	U003	Setting the service telephone number	
	U004	Setting the machine number	-
	U010	Setting the maintenance mode ID	-
	U019	Displaying the firrmware version	-
Initializa-tion	U021	Memory initializing	-
	U024	HDD formatting	-
Drive, paper feed and paper conveying system	U030	Checking the operation of the motors	-
	U031	Checking switches and sensors for paper convey-ing	-
	U032	Checking the operation of the clutches	-
	U033	Checking the operation of the solenoids	-
	U034	Adjusting the print start timing LSU Out Top LSU Out Left	 41/41/41 0/0/0/0/0/0
	U035	Setting the printing area for folio paper	330/210
	U037	Checking the operation of the fan motors	-
	U051	Adjusting the deflection in the paper	0/0/0/0
	U053	Setting the adjustment of the motor speed Full Half 3/4	 -1/-3/-5/-5/-3/-3/13/0/0/0 -3/-2/-3/-3/-1/-1/3/0/0/0 -1/-3/-4/-4/-2/-2/10/0/0/0
Optical	U061	Checking the operation of the exposure lamp	-
	U063	Adjusting the shading position	0
	U065	Adjusting the scanner magnification	0/0
	U066	Adjusting the scanner leading edge registration	0/0
	U067	Adjusting the scanner center line	0/0
	U068	Adjusting the scanning position for originals from the DP	0/0
	U070	Adjusting the DP magnification	0/0
	U071	Adjusting the DP scanning timing	0/0/0/0
	U072	Adjusting the DP center line	0/0
	U073	Checking the scanner operation	100/10200/1
	U074	Adjusting the DP input light luminosity	1

Section	Item No.	Content of maintenance item	Initial setting
Optical	U087	Setting DP reading position modification operation	145/145/145
	U089	Outputting a MIP-PG pattern	-
	U099	Adjusting original size detection	0/0/0/0/0 50/50/50/50/50/50/50/50/50 0/0/0/0/0
High voltage	U100	Setting the main high voltage	Auto 0/0/0/0 -/-/-/- 145/145/145/145 Mode0 3 Mode0 Off
	U101	Setting the voltage for the primary transfer Base 1st side 2nd side B/W	 45/36/25 5/5/0/5 2/2/-3/2 30
	U106	Setting the voltage for the secondary transfer Color-Light/Normal1-1st Side Color-Light/Normal1-2nd Side Color-Normal2/3-1st Side Color-Normal2/3-2nd Side Color-Heavy1-1st Side Color-Heavy1-2nd Side Color-Heavy2/3-1st Side Color-Heavy2/3-2nd Side Color-OHP Color-Coated B/W-Light/Normal3-1st Side B/W-Light/Normal3-2nd Side B/W-Heavy1-1st Side B/W-Heavy1-2nd Side B/W-Heavy2/3-1st Side B/W-Heavy2/3-2nd Side	 83/58/42 88/60/40 85/60/44 90/62/42 64/45/33 68/47/32 54/37/25 57/37/25 40/33/25 59/42/31 78/53/40 83/55/38 60/41/31 64/43/30 51/35/25 54/34/25
	U107	Setting the voltage for the intermediate transfer cleaning Belt(A) Belt(B) Belt(C)	 13/9/10/13/10/9 90/45/68/75/35/53 90/45/68/75/35/53

Section	Item No.	Content of maintenance item	Initial setting
High voltage	U108	Setting separation shift bias Ligjt/Normal1 Normal2/3 Heavy1 Coated Timing	 20/20 10/12 10/10 10/10 3/0/0/100
	U110	Checking the drum count	0/0/0/0
	U111	Checking the drum drive time	0/0/0/0
	U117	Checking the drum number	-
	U118	Displaying the drum history	-
	U122	Checking the transfer belt unit number	-
	U123	Displaying the transfer belt unit history	-
	U127	Checking/clearing the transfer count	0/0/0/0
Developer	U135	Checking toner motor operation	-
	U136	Setting toner near end detection	3/3
	U139	Displaying the temperature and humidity outside the machine	-
	U140	Setting developer bias Mag DC Sleeve DC Clock Freq Clock Duty AC Ctrl On Timing Off Timing	 480/480/450/450/50/50/50/50/380/380/350/350 180/180/150/150/150/150/150/150/180/180/150/150 36/36/36/36/36/36/36/36/36/36/36/36 37/37/37/37/33/33/33/33/33/33/33/33 1500/1500/1500/1500/1150/1150/1150/1150/1150/1150/1150/1150 0/0/0/0 0/0/0/0
	U147	Setting for toner applying operation	0/60
	U150	Checking sensors for toner	-
	U157	Checking the developer drive time	0/0/0/0
	U158	Checking the developer count	0/0/0/0
Fuser	U161	Setting the fuser control temperature	210/240/190/110/100/125/150/155/155/130/150/240/90/50/200/95
	U163	Resetting the fuser problem data	-
	U167	Checking/setting the fuser count	0/0/0
	U169	Checking/setting the fuser power source	-
	U199	Displaying fuser heater temperature	-

Section	Item No.	Content of maintenance item	Initial setting
Operation panel and support equipment	U200	Turning all LEDs on	-
	U201	Initializing the touch panel	-
	U202	Setting the KMAS host monitoring system	-
	U203	Checking DP operation	-
	U204	Setting the presence or absence of a key card or key counter	Off/Coin Vender
	U206	Setting the presence or absence of a coin vender Normal B/W CMY RGB Full Color	 10/10/10/10 100/50/30/50 100/50/30/50 100/50/30/50
		AD B/W CMY RGB Full Color	 10/10/10/10 100/50/30/50 100/50/30/50 100/50/30/50
		Print B/W Full Color	 10/10/10/10 100/50/30/50
		Boot Mode	Normal
	U207	Checking the operation panel keys	-
	U221	Setting the USB host lock function	Off
	U222	Setting the IC card type	Other
	U223	Operation panel lock	Unlock
	U224	Install original panel display	-
	U243	Checking the operation of the DP motors	-
	U244	Checking the DP switches	-
	U245	Checking messages	-

Section	Item No.	Content of maintenance item	Initial setting
Mode setting	U250	Checking/clearing the maintenance cycle	-
	U251	Checking/clearing the maintenance counter	-
	U252	Setting the destination	-
	U253	Switching between double and single counts	Double count (A3/Ledger)
	U260	Selecting the timing for copy counting	Eject
	U265	Setting OEM purchaser code	-
	U276	Setting the copy count mode	Mode0
	U278	Setting the delivery date	-
	U284	Setting 2 color copy mode	Off
	U285	Setting service status page	ON
	U325	Setting the paper interval	1
	U326	Setting the black line cleaning indication	ON/8
	U332	Setting the size conversion factor Rate Mode Level 1 Level 2	1.0
	U340	Setting the applied mode Adj Memory Adj Max Job	
	U341	Specific paper feed location setting for printing function	Off/Off/Off
	U343	Switching between duplex/simplex copy mode	Off
	U345	Setting the value for maintenance due indication	0
Image processing	U402	Adjusting margins of image printing	4.0/3.0/3.0/3.9
	U403	Adjusting margins for scanning an original on the contact glass	2.0/2.0/2.0/2.0
	U404	Adjusting margins for scanning an original from the DP	3.0/2.5/3.0/4.0
	U407	Adjusting the leading edge registration for memory image printing	0
	U410	Adjusting the halftone automatically	Table1
	U411	Adjusting the scanner automatically	-
	U415	Adjusting the print position automatically	-

Section	Item No.	Content of maintenance item	Initial setting
Image processing	U425	Setting the target	-
		Chart1	
		White	93.6/0.9/-0.4
		Black	10.6/-0.2/-0.7
		Grav1	76.2/-0.2/1.2
		Grav2	25.2/-0.2/-0.2
		Grav3	51.3/-0.3/0.3
		C	72.6/-32.8/-11.5
		M	48.1/69.9/-6.1
		Y	86.2/-18.6/81.7
		R	46.7/54.2/38.6
		G	67.8/-51.3/48.9
		B	38.8/25.3/-22.8
		Adjust Original	5.0/10.0/190.0
		Chart2/CCD	
		N875	85.4/0.0/1.1
		N475	52.0/-1.3/2.4
		N125	21.0/-0.5/2.5
		C	55.2/-29.7/-45.0
		M	45.9/71.2/-2.1
		Y	86.3/-9.8/89.1
		R	45.5/63.2/43.3
		G	48.4/-70.6/25.9
		B	23.6/21.3/-42.9
		Adjust Original	15.0/10.0/190.0
		Chart2/DP	15.0/15.0/390.0
	U429	Setting the offset for the color balance	
		Text+Photo	0/0/0/0
		Photo	0/0/0/0
		Photo/Printout	0/0/0/0
		Text	0/0/0/0
		Graphics/Map	0/0/0/0
		Copy/Printout	5/5/5/5
	U464	Setting the ID correction operation	
		Permission	On/On
		Time interval	20/18/11
		Bias target	760/760/750/820
		Gamma target	300/300/300/400
	U467	Setting the color registration adjustment	On/4

Section	Item No.	Content of maintenance item	Initial setting
Image processing	U468	Checking the color registration data Auto(C) Auto(M) Auto(Y) Manual(C) Manual(M) Manual(Y)	-
	U469	Adjusting the color registration Regist	-
	U470	Setting the JPEG compression ratio Copy Photo Text Send Photo Text HC-PDF(BG) HC-PDF(Char) System	 90/90 90/90 70/90/30/40/51/70/90/30/40/51 70/90/30/40/51/70/90/30/40/51 15/25/90/15/25/90 15/25/90/15/25/90/ 90/90
	U473	Adjusting laser power output	-
	U485	Setting the image processing mode	1/0
	U486	Setting color/black and white operation mode	Mode2

Section	Item No.	Content of maintenance item	Initial setting
Fax	U600	Initializing all data	-
	U601	Initializing permanent data	-
	U603	Setting user data 1	-
	U604	Setting user data 2	-
	U605	Clearing data	-
	U610	Setting system 1 Setting:[Cut Line(100%)] Setting:[Cut Line(Auto)] Setting:[Cut Line(100%)]	 3 0 0
	U611	Setting system 2 Setting:[Adj Lines] Setting:[Adj Lines(A4)] Setting:[Adj Lines(LT)]	 7 22 26
	U612	Setting system 3 Setting:[Auto Reduct] Setting:[Protocol List]	 On Off
	U615	Setting system 6	Ledger
	U620	Setting the remote switching mode	One
	U625	Setting the transmission system 1 Setting:[Interval] Setting:[Times]	 2 3
	U630	Setting communication control 1 Setting:[TX Speed] Setting:[RX Speed] Setting:[TX Echo] Setting:[RX Echo]	 14400bps/V17 14400bps 300 75
	U631	Setting communication control 2 Setting:[ECM TX] Setting:[ECM RX] Setting:[CED Freq]	 On On 2100
	U632	Setting communication control 3 Setting:[DIS 4Byte] Setting:[Num OF CNG(F/T)]	 Off 2Time

Section	Item No.	Content of maintenance item	Initial setting
Fax	U633	Setting communication control 4 Setting:[V.34] Setting:[DIS 2Res] Setting:[DIS 2Res] Setting:[RTN Check]	 On On Once 15%
	U634	Setting communication control 5	0
	U640	Setting communication time 1 Setting:[Time (One)] Setting:[Time (Cont)]	 7 80
	U641	Setting communication time 2 Setting:[T0 Time Out] Setting:[T1 Time Out] Setting:[T2 Time Out] Setting:[Ta Time Out] Setting:[Tb1 Time Out] Setting:[Tb2 Time Out] Setting:[Tc Time Out] Setting:[Td Time Out]	 56 36 69 30 20 80 60 6
	U650	Setting modem 1 Setting:[Reg G3 TX Eqr] Setting:[Reg G3 RX Eqr] Setting:[RX Mdm Level]	 0dB 0dB -43dBm
	U651	Setting modem 2 Modem output level DTMF output level (main value) DTMF output level (level difference)	 -11 -8 2
	U660	Setting the NCU Setting:[Exchange] Setting:[Dial Tone] Setting:[Busy Tone] Setting:[PBX Setting] Setting:[DC Loop]	 PSTN On On Loop On
	U670	Outputting lists	-
	U671	Clear FAX back up data	
	U695	FAX function customize	On/Off
	U698	Setting the port addressed in maintenance mode	
	U699	Setting the software switches	-

Section	Item No.	Content of maintenance item	Initial setting
Others	U901	Checking copy counts by paper feed locations	0/0/0/0/0/0
	U903	Checking/clearing the paper jam counts	-
	U904	Checking/clearing the call for service counts	-
	U905	Checking counts by optional devices	0/0/0/0
	U906	Resetting partial operation control	-
	U908	Checking the total counter value	0
	U910	Clearing the print coverage data	-
	U911	Checking copy counts by paper sizes	0/0/0/0/0/0/0/0/0/0/0
	U917	Setting backup data reading/writing	-
	U920	Checking the copy counts	0/0/0/0/0/0/0/0/0/0
	U927	Clearing the all copy counts and machine life counts (one time only)	-
	U928	Checking/clearing the paper jam counts	0
	U942	Setting of deflection for feeding from DP	0/0
	U952	Maintenance mode workflow	-
	U964	Checking of log	-
	U969	Checking of toner area code	-
	U977	Data capture mode	-
	U984	Checking the developer unit number	-
	U985	Displaying the developer history	-
	U989	HDD Scan disk	-
	U991	Checking the scanner operation count	0/0/0

(3) Contents of the maintenance mode items

Item No.	Description
U000	**Outputting an own-status report** **Description** Outputs lists of the current settings of the maintenance items and paper jam and service call occurrences. Outputs the event log. Also sends output data to the USB memory. **Purpose** To check the current setting of the maintenance items, or paper jam or service call occurrences. Before initializing or replacing the backup RAM, output a list of the current settings of the maintenance items to reenter the settings after initialization or replacement. **Method:**Outputs the report 1. Press the start key. 2. Select the item to be output.

Display	Output list
Maintenance	List of the current settings of the maintenance modes
User Status	Outputs the user status page
Service Status	Outputs the service status page
Event	Outputs the event log
Network Status	Outputs the network status page
All	Outputs the all reports

3. Select [Print].
4. Press the start key. A list is output.
   When A4/Letter paper is available, a report of this size is output. If not, specify the paper feed location.
   The output status is displayed.

Display	Description
---	During output standby
Active	During output process
OK	Output process completion

Item No.	Description
U000	**Method: Send to the USB memory** 1. Press the power key on the operation panel, and after verifying the main power indicator has gone off, switch off the main power switch. 2. Insert USB memory in USB memory slot. 3. Turn the main power switch on. 4. Enter the maintenance item. 5. Press the start key. 6. Select the item to be send. **Display** / **Output list** USB (Text) — Sends output data to the USB memory (text type) USB (HTML) — Sends output data to the USB memory (HTML type) 7. Press the start key. Output will be sent to the USB memory. **Completion** Press the stop key. The screen for selecting a maintenance item No. is displayed.

Item No.	Description
U000	**Event log**

Event Log

MFP
TASKalfa 2550ci
(1) Firmware version 2MV_2000.000.000 2011.08.02

(2) 2011/08/02 15:15

(3)	(4)	(5)	(6)
[XXXXXXXX]	[XXXXXXX]	[XXXXXXX]	[XXXXXXXX]

(8) Paper Jam Log

#	Count.	Event Descriprions
16	1876543	0501.01.08.01.01
15	166554	4002.01.08.01.01
14	4988	0501.01.08.01.01
13	4988	4002.01.08.01.01
12	4988	0501.01.08.01.01
11	4988	4002.01.08.01.01
10	1103	0501.01.08.01.01
9	1103	4002.01.08.01.01
8	1103	0501.01.08.01.01
7	1103	4002.01.08.01.01
6	1027	0501.01.08.01.01
5	1027	4002.01.08.01.01
4	1027	0501.01.08.01.01
3	1027	4002.01.08.01.01
2	406	0501.01.08.01.01
1	36	4002.01.08.01.01

0501.01.08.01.01
(a) (b) (c) (d) (e)

(9) Service Call Log

#	Count.	Service Code
8	1881214	01.6000
7	178944	01.2100
6	5296	01.4000
5	5295	01.6000
4	2099	01.2100
3	1054	01.4000
2	809	01.6000
1	30	01.2100

(10) Maintenance Log

#	Count.	Item
3	104511	01.00
2	3454	01.00
1	34	01.01

(11) Unknown toner Log

#	Count.	Item
2	3454	01.00
1	32	01.00

(12) Counter Log

(f)
J0100: 0 J4201: 0
J0101: 0 J4202: 0
J0104: 0 J4203: 0
J0106: 0 J4208: 0
J0107: 0 J4209: 0
.
.
J0511: 0
J0512: 0
J0513: 0
J0518: 0
J0519: 0
J0520:
J0521:
J0522:
J0523:
J0524:
J0525:
.
.
.
.
.
.
.
.

(g)
C0030: 1
C0070: 1
C0100: 1
C0120: 1
C0130: 1
.
.
C2000: 1
C2010: 1
C2600: 1
C3100: 1
C3200: 1
.
.
.
.
.
.
.
.
.

(h)
T00: 1
T01: 1

(7) [XXXXXXXXXXXXXXXX]

Figure 1-3-1

Item No.	Description
U000	**Detail of event log**

No.	Items	Description		
(1)	System version			
(2)	System date			
(3)	Engine soft version			
(4)	Engine boot version			
(5)	Controller BROM version			
(6)	Operation panel mask version			
(7)	Machine serial number			
(8)	Paper Jam Log	#	Count.	Event
		Remembers 1 to 16 of occurrence. If the occurrence of the previous paper jam is less than 16, all of the paper jams are logged. When the occurrence excesseds 16, the oldest occurrence is removed.	The total page count at the time of the paper jam.	Log code (hexadecimal, 5 categories) (a) Cause of a paper jam (b) Paper source (c) Paper size (d) Paper type (e) Paper eject
		(a) Cause of paper jam (Hexadecimal)		
		For details on the case of paper jam, refer to Paper Misfeed Detection. (P.1-4-2)		
		(b) Detail of paper source (Hexadecimal)		
		00: MP tray 01: Cassette 1 02: Cassette 2 03: Cassette 3 (paper feeder) 04: Cassette 4 (paper feeder) 05 to 09: Reserved		
		(c) Detail of paper size (Hexadecimal)		
		00: (Not specified) 01: Monarch 02: Business 03: International DL 04: International C5 05: Executive 06: Letter-R 86: Letter-E 07: Legal 08: A4R 88: A4E 09: B5R 89: B5E 0A: A3	0B: B4 0C: Ledger 0D: A5R 0E: A6 0F: B6 10: Commercial #9 11: Commercial #6 12: ISO B5 13: Custom size 1E: C4 1F: Postcard 20: Reply-paid post-card 21: Oficio II	22: Special 1 23: Special 2 24: A3 wide 25: Ledger wide 26: Full bleed paper (12 x 8) 27: 8K 28: 16K-R A8: 16K-E 32: Statement-R B2: Statement-E 33: Folio 34: Western type 2 35: Western type 4

Item No.	Description
U000	

No.	Items	Description		
(8) cont.	Paper Jam Log	(d) Detail of paper type (Hexadecimal)		
		01: Plain 02: Transparency 03: Preprinted 04: Labels 05: Bond 06: Recycled 07: Vellum 08: Rough 09: Letterhead	0A: Color 0B: Prepunched 0C: Envelope 0D: Cardstock 0E: Coated 0F: 2nd side 10: Thick 11: High quality	15: Custom 1 16: Custom 2 17: Custom 3 18: Custom 4 19: Custom 5 1A: Custom 6 1B: Custom 7 1C: Custom 8
		(e) Detail of paper eject location (Hexadecimal)		
		01: Face down (FD) 02: Face up (FU)/Document finisher face up (FU)/ 03: Document finisher face down (FD)		
(9)	Service Call Log	#	Count.	Service Code
		Remembers 1 to 8 of occurrence of self diagnostics error. If the occurrence of the previous diagnostics error is less than 8, all of the diagnostics errors are logged.	The total page count at the time of the self diagnostics error.	Self diagnostic error code (See page 1-4-10) Example: 01.6000 01: Self diagnostic error 6000: Self diagnostic error code number
(10)	Maintenance Log	#	Count.	Item
		Remembers 1 to 8 of occurrence of replacement. If the occurrence of the previous replacement of toner container is less than 8, all of the occurrences of replacement are logged.	The total page count at the time of the replacement of the toner container.	Code of maintenance replacing item (1 byte, 2 categories) First byte (Replacing item) 01: Toner container Second byte (Type of replacing item) 00: Black 01: Cyan 02: Magenta 03: Yellow First byte (Replacing item) 02: Maintenance kit Second byte (Type of replacing item) 01: MK-8315A 02: MK-8315B

Item No.	Description
U000	

No.	Items	Description		
(11)	Unknown Toner Log	#	Count.	Item
		Remembers 1 to 5 of occurrence of unknown toner detection. If the occurrence of the previous unknown toner detection is less than 5, all of the unknown toner detection are logged.	The total page count at the time of the toner empty error with using an unknown toner container.	Unknown toner log code (1 byte, 2 categories) First byte 01: Toner container (Fixed) Second byte 00: Black 01: Cyan 02: Magenta 03: Yellow
(12)	Counter Log Comprised of three log counters including paper jams, self diagnostics errors, and replacement of the toner container.	(f) Paper jam	(g) Self diagnostic error	(h) Maintenance item replacing
		Indicates the log counter of paper jams depending on location. Refer to Paper Jam Log. All instances including those are not occurred are displayed.	Indicates the log counter of self diagnostics errors depending on cause. (See page 1-3-15) Example: C6000: 4 Self diagnostics error 6000 has happened four times.	Indicates the log counter depending on the maintenance item for maintenance. T: Toner container 00: Black 01: Cyan 02: Magenta 03: Yellow M: Maintenance kit 01: MK-8315A 02: MK-8315B Example: T00: 1 The toner container has been replaced once.

Item No.	Description
U000	**Service status page (1)**

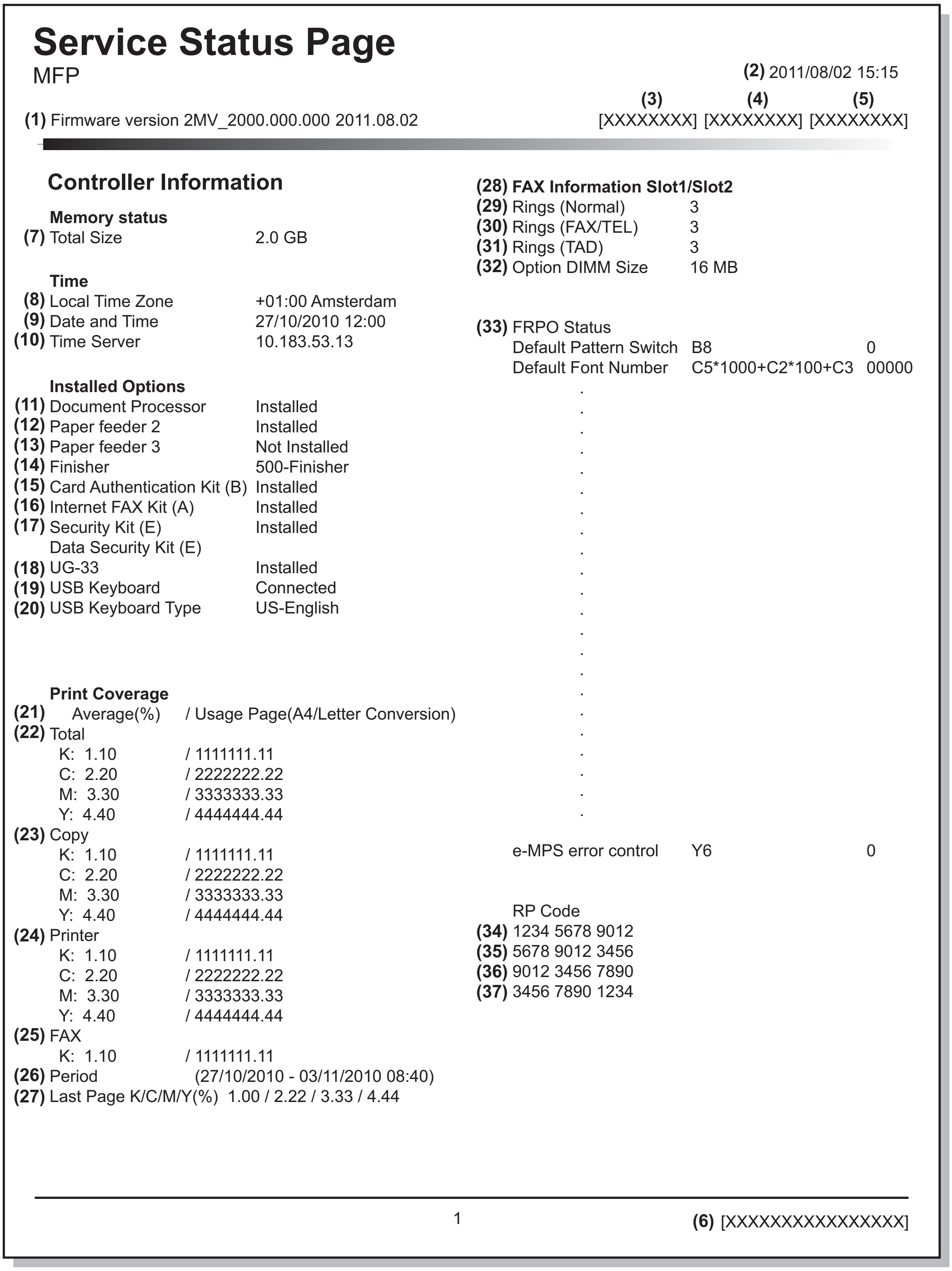

Service Status Page

MFP

(2) 2011/08/02 15:15

(1) Firmware version 2MV_2000.000.000 2011.08.02

(3) [XXXXXXXX] **(4)** [XXXXXXXX] **(5)** [XXXXXXXX]

Controller Information

Memory status

(7) Total Size 2.0 GB

Time

(8) Local Time Zone +01:00 Amsterdam
(9) Date and Time 27/10/2010 12:00
(10) Time Server 10.183.53.13

Installed Options

(11) Document Processor Installed
(12) Paper feeder 2 Installed
(13) Paper feeder 3 Not Installed
(14) Finisher 500-Finisher
(15) Card Authentication Kit (B) Installed
(16) Internet FAX Kit (A) Installed
(17) Security Kit (E) Installed
Data Security Kit (E)
(18) UG-33 Installed
(19) USB Keyboard Connected
(20) USB Keyboard Type US-English

Print Coverage

```
(21)    Average(%)    / Usage Page(A4/Letter Conversion)
(22) Total
       K:  1.10       / 1111111.11
       C:  2.20       / 2222222.22
       M:  3.30       / 3333333.33
       Y:  4.40       / 4444444.44
(23) Copy
       K:  1.10       / 1111111.11
       C:  2.20       / 2222222.22
       M:  3.30       / 3333333.33
       Y:  4.40       / 4444444.44
(24) Printer
       K:  1.10       / 1111111.11
       C:  2.20       / 2222222.22
       M:  3.30       / 3333333.33
       Y:  4.40       / 4444444.44
(25) FAX
       K:  1.10       / 1111111.11
(26) Period             (27/10/2010 - 03/11/2010 08:40)
(27) Last Page K/C/M/Y(%)  1.00 / 2.22 / 3.33 / 4.44
```

(28) FAX Information Slot1/Slot2
(29) Rings (Normal) 3
(30) Rings (FAX/TEL) 3
(31) Rings (TAD) 3
(32) Option DIMM Size 16 MB

```
(33) FRPO Status
     Default Pattern Switch   B8                   0
     Default Font Number      C5*1000+C2*100+C3    00000
                     .
                     .
                     .
                     .
                     .
                     .
                     .
                     .
                     .
                     .
                     .
                     .
                     .
                     .
                     .
                     .
                     .
                     .
                     .
                     .
                     .
                     .
     e-MPS error control      Y6                   0
```

RP Code
(34) 1234 5678 9012
(35) 5678 9012 3456
(36) 9012 3456 7890
(37) 3456 7890 1234

1 **(6)** [XXXXXXXXXXXXXXXX]

Figure 1-3-2

Item No.	Description
U000	**Service status page (2)**

Service Status Page

MFP 02/08/2011 15:15

Firmware version 2MV_2000.000.000 2011.08.02 [XXXXXXXX] [XXXXXXXX] [XXXXXXXX]

Engine Information

(38) NVRAM Version _1F31225_1F31225
(39) Scanner Version 2LC_1200.001.089
(40) FAX Slot1
FAX BOOT Version 5JT_5000.001.001
FAX APL Version 5JT_5100.001.001
FAX IPL Version 5JT_5200.001.001
(41) MAC Address 00:C0:EE:D0:01:0D

Send Information

(42) Date and Time 11/08/02 15:15
(43) Address

1/2 **(44) (45)**
(46) 100/100
(47) 0/0/0/0/0/0/0/0
(48) 0000000/0000000/0000000/0000000/0000000/0000000/0000000/0000000/0000000/
0000000/0000000/0000000/0000000/0000000/0000000/0000000/0000000/0000000/0000000/0000000/0000000/
F00/U00/0/0/0/0/30/30/70/70/abcde/1/0/1/ **(49) (50) (51) (52) (53) (54) (55) (56) (57) (58) (59) (60) (61) (62)**
(63) 0000/0000/0000/0000/0000/0000/0000/0000/0000/0000/0000/0000/0000/0000/0000/
0000/0000/0000/0000/0000/0000/0000/0000/0000/
(64) 0000/0100/0500/1000/0000/0100/0500/1000/0000/0100/0500/1000/0000/0100/0500/1000/
0000/0100/0500/1000/0000/0100/0500/1000/0000/0100/0500/1000/0000/0100/0500/1000/
(65) 000000000000000/000000000000000/000000000000000/000000000000000/000000000000000/000000000000000/000000000000000/
000000000000000/00000000/
(66) 000000000000000/000000000000000/000000000000000/000000000000000/0000000000/
(67) 000000000000000/000000000000000/000000000000000/
(68) 000000000000000/000000000000000/000000000000000/000000000000000/000000000000000/000000000000000/000000000000000/
(69) 000000000000000/000000000000000/000000000000000/000000000000000/000000000000000/000000000000000/
(70) 000000000000000/000000000000000/000000000000000/000000000000000/000000000000000/000000000000000/000000000000000/
(71) 000000000000000/000000000000000/000000000000000/000000000000000/000000000000000/000000000000000/000000000000000/
(72) 000000000000000/000000000000000/000000000000000/
(73) 000000000000000/000000000000000/000000000000000/000000000000000/000000000000000/000000000000000/000000000000000/
(74) 000000000000000/000000000000000/000000000000000/000000000000000/000000000000000/000000000000000/000000000000000/
(75) 000000000000000/000000000000000/000000000000000/000000000000000/000000000000000/000000000000000/000000000000000/
(76) 000000000000000/000000000000000/000000000000000/000000000000000/000000000000000/000000000000000/000000000000000/
(77) 12345678/11223344/00001234abcd567800001234abcd5678/0123456789012345678901234567890 1/0008/00/07
12345678/11223344/00001234abcd567800001234abcd5678/0123456789012345678901234567890 1/0008/00/07
12345678/11223344/00001234abcd567800001234abcd5678/0123456789012345678901234567890 1/0008/00/07
12345678/11223344/00001234abcd567800001234abcd5678/0123456789012345678901234567890 1/0008/00/07
(78) XXXXXXXX
[ABCDEFGHIJ] [ABCDEFGHIJ] **(79) (80)**
[ABCDEFGHIJ] [ABCDEFGHIJ] **(81) (82)**
(83) 00070107FE/0700FE00FE/00FE000100/0000000000/0000000000/0000000000/00000A010A/0A0A0A3200/0000000000/0000000000/
0008000000/080000001D/0096009B00/9B009BFFFB/0082000000/000000001F/0000002C00/0000000000/0000000000/0000000000/
0000000000/0000000000/0000000000
0/3/ **(84) (85)**
0/12.3/56.7/ **(86) (87) (88)**
1/1/1/0/1/0 2010/12/15 12:34:56 **(89)**
1/5/ **(90)(91)**
ABCDEFGHIJKL/ABCDEFGHIJKL/ABCDEFGHIJKL/ABCDEFGHIJKL/ **(92)**

2 [XXXXXXXXXXXXXXXX]

Figure 1-3-3

Item No.	Description
U000	**Detail of service status page**

No.	Description	Supplement
(1)	Firmware version	-
(2)	System date	-
(3)	Engine soft version	-
(4)	Engine boot version	-
(5)	Operation panel mask version	-
(6)	Machine serial number	-
(7)	Total memory size	-
(8)	Local time zone	-
(9)	Report output date	Day/Month/Year hour:minute
(10)	NTP server name	-
(11)	Presence or absence of the document processor	Installed/Not installed
(12)	Presence or absence of the paper feeder	Installed/Not installed
(13)	Presence or absence of the side feeder	Installed/Not installed
(14)	Presence or absence of the finisher	500-sheet finisher/Not Installed
(15)	Presence or absence of the IC card authentication kit	Installed/Not Installed/Trial
(16)	Presence or absence of the internet fax kit	Installed/Not Installed
(17)	Presence or absence of the data security kit	Installed/Not Installed
(18)	Presence or absence of the UG-33	Installed/Not Installed
(19)	Presence or absence of the USB keyboard	Connected/Not connected
(20)	USB keyboard setting display	US-English/US-English with Euro/German/French
(21)	Page of relation to the A4/Letter	-
(22)	Average coverage for total	Black/Cyan/Magenta/Yellow
(23)	Average coverage for copy	Black/Cyan/Magenta/Yellow
(24)	Average coverage for printer	Black/Cyan/Magenta/Yellow
(25)	Average coverage for fax	Black/Cyan/Magenta/Yellow

Item No.	Description
U000	

No.	Description	Supplement
(26)	Cleared date and output date	-
(27)	Coverage on the final output page	-
(28)	Fax kit information	This item is printed only when the fax kit is installed.
(29)	Number of rings	0 to 15
(30)	Number of rings before automatic switching	0 to 15
(31)	Number of rings before connecting to answering machine	0 to 15
(32)	Optional DIMM size	-
(33)	FRPO setting	-
(34)	RP code	Code the engine software version and the date of update.
(35)	RP code	Code the main software version and the date of update.
(36)	RP code	Code the engine software version and the date of the previous update.
(37)	RP code	Code the main software version and the date of the previous update.
(38)	NV RAM version	_ 1F3 1225 _ 1F3 1225 (a) (b) (c) (d) (e) (f) (a) Consistency of the present software version and the database _ (underscore): OK * (Asterisk): NG (b) Database version (c) The oldest time stamp of database version (d) Consistency of the present software version and the ME firmware version _ (underscore): OK * (Asterisk): NG (e) ME firmware version (f) The oldest time stamp of the ME database version Normal if (a) and (d) are underscored, and (b) and (e) are identical with (c) and (f).
(39)	Scanner firmware version	-
(40)	Fax firmware version	This item is printed only when the fax kit is installed.
(41)	Mac address	-

Item No.	Description
U000	

No.	Description	Supplement
(42)	The last sent date and time	-
(43)	Transmission address	-
(44)	Destination information	-
(45)	Area information	-
(46)	Margin settings	Top margin/Left margin
(47)	Margin/Page length/Page width settings	Top margin integer part/Top margin decimal part/ Left margin integer part/Left margin decimal part/ Page length integer part/Page length decimal part/ Page width integer part/Page width decimal part
(48)	Life counter (The first line)	Machine life/MP tray/Cassette 1/Cassette 2/ Cassette 3/Cassette 4/Cassette 5/Cassette 6/ Cassette 7/Duplex
	Life counter (The second line)	Drum unit K/Drum unit C/Drum unit M/Drum unit Y/ Transfer belt unit/Developer unit K/ Developer unit C/Developer unit M/ Developer unit Y/Maintenance kit A/ Maintenance kit B/Maintenance kit C
(49)	Panel lock information	0: Off/1: Partial lock/2: Full lock
(50)	USB information	U00: Not installed/U01: Full speed/U02: Hi speed
(51	Paper handling information	0: Paper source unit select/1: Paper source unit
(52)	Color printing double count mode	0: All single counts 1: A3, Single count, Less than 420 mm (length) 2: Legal, Single count, 356 mm or less (length) 3: Folio, Single count, Less than 330 mm (length)
(53)	Black and white printing double count mode	0: All single counts 1: A3, Single count, Less than 420 mm (length) 2: Legal, Single count, 356 mm or less (length) 3: Folio, Single count, Less than 330 mm (length)
(54)	Billing counting timing	-
(55)	Temperature (machine inside)	-
(56)	Temperature (machine outside)	-
(57)	Relative humidity (machine outside)	-
(58)	Humidity (machine inside)	-
(59)	Fixed assets number	-
(60)	Job end judgment time-out time	-
(61)	Job end detection mode	-
(62	Prescribe environment reset	0: Off 1: On

Item No.	Description
U000	

No.	Description	Supplement
(63)	Media type attributes 1 to 28 (Not used: 18, 19, 20)	Weight settings 0: Light 1: Normal 1 2: Normal 2 3: Normal 3 4: Heavy 1 5: Heavy 2 6: Heavy 3 7: Extra Heavy Fuser settings 0: High 1: Middle 2: Low 3: Vellum Duplex settings 0: Disable 1: Enable
(64)	Calibration information	Black/Cyan/Magenta/Yellow
(65)	Calibration information	-
(66)		
(67)	Calibration information	-
(68)	Calibration information	-
(69)	Calibration information	-
(70)	Calibration information	-
(71)	Calibration information	-
(72)		
(73)		-
(74)		-
(75)	Calibration information	-
(76)	Calibration information	-
(77)	RFID information	-
(78)	RFID reader/writer version information	-
(79)	Color table version for printer	-
(80)	Color table 2 version for printer	-
(81)	Color table version for copy	-
(82)	Color table 2 version for copy	-
(83)	Maintenance information	-
(84)	Altitude	0: Standard 1: High altitude 1 2: High altitude 2
(85)	Charger roller correction	1 to 5
(86)	Configuring toner coverage counters	0: Full-color count display 1: Color coverage count display

Item No.	Description
U000	

No.	Description	Supplement
(87)	Low coverage setting	0.1 to 100.0
(88)	Middle coverage setting	0.1 to 100.0
(89)	Data Sanitization information	-
(90)	Toner low setting	0: Enabled 1: Disabled
(91)	Toner low detection level	0 to 100 (%)
(92)	Drum serial number	Black/Cyan/Magenta/Yellow

Code conversion

A	B	C	D	E	F	G	H	I	J
0	1	2	3	4	5	6	7	8	9

Item No.	Description
U001	**Exiting the maintenance mode** **Description** Exits the maintenance mode and returns to the normal copy mode. **Purpose** To exit the maintenance mode. **Method** Press the start key. The normal copy mode is entered.
U002	**Setting the factory default data** **Description** Restores the machine conditions to the factory default settings. **Purpose** To move the mirror frame of the scanner to the position for transport **Method** 1. Press the start key. 2. Select [Mode1(All)]. 3. Press the start key. The mirror frame of the scanner returns to the position for transport. 4. Turn the main power switch off and on. * : An error code is displayed in case of an initialization error. When errors occurred, turn main power switch off then on, and execute initialization using maintenance item U002. **Error codes** Codes / Description 0001 / Entity error 0002 / Controller error 0003 / OS errer 0020 / Engine error 0040 / Scanner error

Item No.	Description
U003	**Setting the service telephone number** **Description** Sets the telephone number to be displayed when a service call code is detected. **Purpose** To set the telephone number to call service when installing the machine. **Setting** 1. Press the start key. The keys to enter the number are displayed on the touch panel. 2. Enter a telephone number (up to 15 digits). 3. Press the start key. The setting is set. **Completion** Press the stop key. The screen for selecting a maintenance item No. is displayed.
U004	**Setting the machine number** **Description** Sets or displays the machine number. **Purpose** To check or set the machine number. **Method** 1. Press the start key. If the machine serial number of engine PWB matches with that of main PWB Display: Machine No. Description: Displays the machine serial number If the machine serial number of engine PWB does not match with that of main PWB Display: Machine No.(Main) Description: Displays the machine serial number of main Display: Machine No.(Eng) Description: Displays the machine serial number of engine **Setting** Carry out if the machine serial number does not match. 1. Select [Execute]. 2. Press the start key. Writing of serial No. starts. 3. Turn the main power switch off and on. Allow more than 5 seconds between Off and On. **Completion** Press the stop key. The screen for selecting a maintenance item No. is displayed.

Item No.	Description
U010	**Setting the maintenance mode ID** **Description** Sets the maintenance mode ID. **Purpose** Modify maintenance mode ID for more security. **Method** 1. Press the start key. **Setting** 1. Select [New ID]. 2. Enter a new 8-digit ID on ten keys (0 – 9, *, #). * and # are mandatory to contain. 3. Select [New ID(Reconfirm)]. 4. Enter a new 8-digit ID on ten keys (0 – 9, *, #). 5. Press the start key. The setting is set. **Method: [Initialize]** 1. Select [Initialize]. 2. Press the start key. ID is initialized. **Completion** Press the stop key. The screen for selecting a maintenance item No. is displayed.

Display	Description
New ID	Enter a new 8-digit ID
New ID(Reconfirm)	Enter a new 8-digit ID (to confirm)
Initialize	Initialize the ID

Item No.	Description
U019	**Displaying the firrmware version** **Description** Displays the part number of the ROM fitted to each PWB. **Purpose** To check the part number or to decide, if the newest version of ROM is installed. **Method** 1. Press the start key. The ROM version are displayed. 2. Change the screen using the cursor up/down keys.

Display	Description
Main	Main ROM
MMI	Operation ROM
Browser	Browser ROM
Engine	Engine ROM
Engine Boot	Engine booting
Scanner	Scanner ROM
Scanner Boot	Scanner booting
RFID	RFID ROM
IH CPU	IH CPU ROM
IH CPU Boot	IH CPU booting
IO CPU	IO CPU ROM
IO CPU Boot	IO CPU booting
LSU CPU	MOTOR CPU ROM
LSU CPU Boot	MOTOR CPU booting
Video CPU	Video CPU ROM
Video CPU Boot	Video CPU booting
Dictionary	-
Option Language	Optional language ROM
PDF1.7 Resource	PDF1.7 resource ROM
Solution Framework	Framework ROM
Color Table1(Copy)	Color table 1 (copy) ROM
Color Table2(Copy)	Color table 2 (copy) ROM
Color Table1(Prn)	Color table 1 (printer) ROM
Color Table2(Prn)	Color table 2 (printer) ROM

Item No.	Description
U019	

Display	Description
DP	Document processor ROM
DP Boot	Document processor booting
PF	Paper feeder ROM
PF Boot	Paper feeder booting
AK	Bridge ROM
AK Boot	Bridge booting
DF	Document finisher ROM
DF Boot	Document finisher booting
Fax APL1	FAX APL1
Fax Boot1	FAX boot1
Fax IPL1	FAX IPL1
Fax APL2	FAX APL2 (multi port)
Fax Boot2	FAX boot (multi port)
Fax IPL2	FAX IPL2 (multi port)
Application Name 01	Installed application name
Application Name 02	Installed application name
Application Name 03	Installed application name
Application Name 04	Installed application name
Application Name 05	Installed application name

Completion

Press the stop key. The screen for selecting a maintenance item No. is display.

Item No.	Description
U021	**Memory initializing** **Description** Initializes all settings, except those pertinent to the type of machine, namely each counter, service call history and mode setting. Also initializes backup RAM according to region specification selected in maintenance item U252 Setting the destination. **Purpose** To return the machine settings to their factory default. **Method** 1. Press the start key. 2. Select [Execute]. 3. Press the start key. All data other than that for adjustments due to variations between machines is initialized based on the destination setting. 4. Turn the main power switch off and on. Allow more than 5 seconds between Off and On. * : An error code is displayed in case of an initialization error. When errors occurred, turn main power switch off then on, and execute initialization using maintenance item U021. **Error codes** Codes: 0001 — Entity error 0002 — Controller error 0020 — Engine error 0040 — Scanner error

Item No.	Description
U024	**HDD formatting** **Description** Initializes the hard disk. **Purpose** To initialize the hard disk when replacing the hard disk after shipping. **Caution** In addition, the following settings are also initialized by initializing the hard disk. System menu (user login administration, job accounting, address book, one-touch keys and document box etc.), shortcuts and panel programs When fully formatted, the following pre-installed software are removed. Option language, PDF1.7 resource, FMU, weekly timer, color table **Method** 1. Press the start key. 2. Select the item.

Display	Description
Full	Full format
Data	Data format (the application software are retained)

3. Press [Execute].
4. Press the start key to initialize the hard disk.
5. Turn the main power switch off and on. Allow more than 5 seconds between Off and On.

Item No.	Description
U030	**Checking the operation of the motors** **Description** Drives each motor. **Purpose** To check the operation of each motor. **Method** 1. Press the start key. 2. Select the motor to be operated. 3. Press the start key. The operation starts. **Display** / **Description** Feed — Conveying motor (CM) is turned on Exit(CW) — Eject motor (EM) is turned on clockwise Exit(CCW) — Eject motor (EM) is turned on counterclockwise Drum K — Drum motor K (DRM-K) is turned on Drum COL — Drum motor YCM (DRM-YCM) is turned on DLP K(CW) — DLP motor K (DEVM-K) is turned on clockwise DLP K(CCW) — DLP motor K (DEVM-K) is turned on counterclockwise DLP COL(CW) — DLP motor YCM (DEVM-YCM) is turned on clockwise DLP COL(CCW) — DLP motor YCM (DEVM-YCM) is turned on counterclockwise 4. To stop operation, press the stop key. **Completion** Press the stop key. The screen for selecting a maintenance item No. is displayed.

Item No.	Description
U031	**Checking switches and sensors for paper conveying** **Description** Displays the on-off status of each paper detection switch or sensor on the paper path. **Purpose** To check if the switches and sensors for paper conveying operate correctly. **Method** 1. Press the start key. 2. Turn each switch or sensor on and off manually to check the status. When a switch or sensor is detected to be in the ON position, the display for that switch or sensor will be “1”. **Completion** Press the stop key. The screen for selecting a maintenance item No. is displayed.

Display	Switches and sensors
Regist	Registration sensor (RS)
Fuser	Fuser pre sensor (FUPS)
Duplex	Duplex sensor (DUS)
Feed2	Feed sensor 2 (FS2)
FeedDown Tray Full	Paper full sensor (PFS)
Job Separator Full	JOB paper full sensor (JPFS)
Bridge Exit	Bridge eject sensor (BRES)
Fuser Jam	Eject sensor (ES)
Feed	Feed sensor (FS)

Item No.	Description
U032	**Checking the operation of the clutches** **Description** Turns each clutch on. **Purpose** To check the operation of each clutch. **Method** 1. Press the start key. 2. Select the clutch to be operated. 3. Press the start key. The operation starts. Display / Description: Feed — Paper feed clutch 1 (PFCL1) is turned on Regist — Registration clutch (RCL) is turned on Duplex — Duplex clutch (DUCL) is turned on Middle — Middle clutch (MCL) is turned on DLP — Developer stop clutch (DEVSCL) is turned on Feed2 — Paper feed clutch 2 (PFCL2) is turned on 4. Press the stop key. **Completion** Press the stop key. The screen for selecting a maintenance item No. is displayed.
U033	**Checking the operation of the solenoids** **Description** Turns each solenoid on. **Purpose** To check the operation of each solenoid. **Method** 1. Press the start key. 2. Select the solenoid to be operated. 3. Press the start key. The operation starts. Display / Description: MPT — MP solenoid (MPSOL) is turned on Eject — Feedshift solenoid (FSSOL) is turned on Power off — Solenoid off 4. To stop operation, press the stop key. **Completion** Press the stop key. The screen for selecting a maintenance item No. is displayed.

Item No.	Description
U034	**Adjusting the print start timing** **Description** Adjusts the leading edge registration or center line. **Purpose** Make the adjustment if there is a regular error between the leading edges of the copy image and original. Make the adjustment if there is a regular error between the center lines of the copy image and original. **Method** 1. Press the start key. 2. Select the item to be adjusted. The screen for executing each item is displayed.

Display	Description
LSU Out Top	Leading edge registration adjustment
LSU Out Left	Center line adjustment

Adjustment: LSU Out Top

1. Press the system menu key.
2. Press the start key to output a test pattern.
3. Press the system menu key.
4. Select the item to be adjusted.

Display	Description	Setting range	Initial setting	Change in value per step
MPT	Paper feed from MP tray (when large size paper is used)	-128 to 127	41	0.1 mm
Cassette	Paper feed from cassette (when large size paper is used)	-128 to 127	41	0.1 mm
Duplex	Duplex mode (second) (when large size paper is used)	-128 to 127	41	0.1 mm

Large size: 218 mm or more in width of paper.

Item No.	Description
U034	5. Change the setting value using the +/- keys or numeric keys. For output example 1, increase the value. For output example 2, decrease the value.

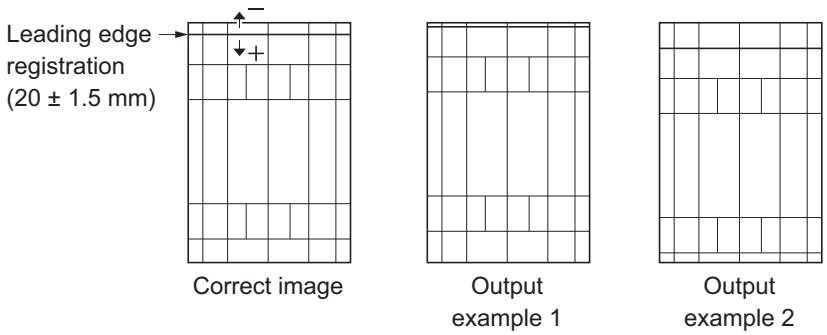

Figure 1-3-4

6. Press the start key. The value is set.

Remark
Changing the larger sizes settings affects those for the smaller sizes.

Caution
Check the copy image after the adjustment. If the image is still incorrect, perform the following adjustments in maintenance mode.

U034 → U066 (P.1-3-44) → U071 (P.1-3-48)

Adjustment: LSU Out Left
1. Press the system menu key.
2. Press the start key to output a test pattern.
3. Press the system menu key.
4. Select the item to be adjusted.

Display	Description	Setting range	Initial setting	Change in value per step
MPT	Paper feed from MP tray	-128 to 127	0	0.1 mm
Cassette1	Paper feed from cassette 1	-128 to 127	0	0.1 mm
Cassette2	Paper feed from cassette 2	-128 to 127	0	0.1 mm
Cassette3	Paper feed from optional cassette 3	-128 to 127	0	0.1 mm
Cassette4	Paper feed from optional cassette 4	-128 to 127	0	0.1 mm
Duplex	Duplex mode (second)	-128 to 127	0	0.1 mm

Item No.	Description
U034	5. Change the setting value using the +/- keys or numeric keys. For output example 1, increase the value. For output example 2, decrease the value. 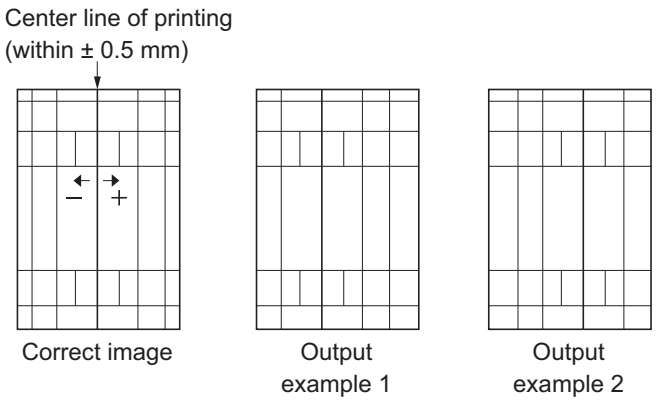 **Figure 1-3-5** 6. Press the start key. The value is set. **Caution** Check the copy image after the adjustment. If the image is still incorrect, perform the following adjustments in maintenance mode. U034 → U067 (P.1-3-45) → U072 (P.1-3-50) **Completion** Press the stop key. The screen for selecting a maintenance item No. is displayed.

Item No.	Description
U035	**Setting the printing area for folio paper** **Description** Changes the printing area for copying on folio paper. **Purpose** To prevent cropped images on the trailing edge or left/right side of copy paper by setting the actual printing area for folio paper. **Setting** 1. Press the start key. 2. Select the item to be set. 3. Change the setting value using the +/- keys or numeric keys. **Display** / **Description** / **Setting range** / **Initial setting** Length / Length / 330 to 356 mm / 330 Width / Width / 200 to 220 mm / 210 4. Press the start key. The value is set. **Completion** Press the stop key. The screen for selecting a maintenance item No. is displayed.
U037	**Checking the operation of the fan motors** **Description** Drives each fan motor. **Purpose** To check the operation of each fan motor. **Method** 1. Press the start key. 2. Select the fan motor to be operated. 3. Press the start key. The operation starts. **Display** / **Description** All / All fan motors are turned on Low Power / Power source fan motor (PSFM) is turned on Container / Container fan motor (CFM) is turned on LSU Cooling / LSU Cooling fan motor (LSUFM) is turned on IH Edge / IH fan motor (IHFM) is turned on To stop operation, press the stop key. **Completion** Press the stop key. The screen for selecting a maintenance item No. is displayed.

Item No.	Description
U051	**Adjusting the deflection in the paper**

Description
Adjusts the deflection in the paper at the registration roller.
Purpose
Make the adjustment if the leading edge of the copy image is missing or varies randomly, or if the copy paper is Z-folded.

Adjustment
1. Press the start key.
2. Press the system menu key.
3. Place an original and press the start key to make a test copy.
4. Press the system menu key.
5. Select the item to be adjusted.

Display	Description	Setting range	Initial setting
MPT	Paper feed from MP tray	-30 to 10	0
Cassette	Paper feed from cassette 1	-30 to 10	0
PF	Paper feed from paper feeder	-30 to 10	0
Duplex	Duplex mode (second)	-30 to 10	0

6. Change the setting value using the +/- keys or numeric keys.
   For output example 1, increase the value. For output example 2, decrease the value.
   The greater the value, the larger the deflection; the smaller the value, the smaller the deflection.

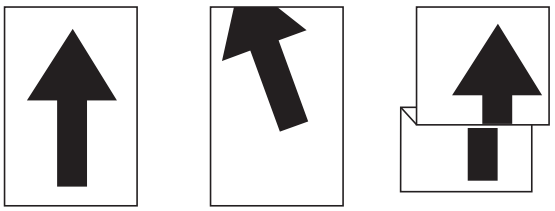

Figure 1-3-6

7. Press the start key. The value is set.

Completion
Press the stop key. The indication for selecting a maintenance item No. appears.

Item No.	Description
U053	**Setting the adjustment of the motor speed**

Description
Performs fine adjustment of the speeds of the motors.
Purpose
Basically, the setting need not be changed. Modify settings by interlock setting only if faulty images occur.

Method
1. Press the start key.
2. Select the item. The screen for executing each item is displayed.

Display	Description
Full	Speed correction value setting at full velocity
Half	Speed correction value setting at half velocity
3/4	Speed correction value setting at 3/4 velocity

Setting
1. Select the item to be adjusted.

Display	Description	Setting range
Feed	Conveying motor 1 (CM1) speed adjustment	-50 to 50
Exit	Eject motor (EM) speed adjustment	-40 to 40
Drum(CMY)	Drum motor (DRM-YCM) speed adjustment	-50 to 50
Drum(K)	Drum motor (DRM-K) speed adjustment	-50 to 50
DLP(CMY)	DLP motor (DEVM-YCM) speed adjustment	-50 to 50
DLP(K)	DLP motor (DEVM-K) speed adjustment	-50 to 50
Fixing	Fixing motor(FUM) speed adjustment	-50 to 50
Porygon(CMY)	Porygon motor(PM-YCM) speed adjustment	-20 to 20
Porygon(K)	Porygon motor (PM-K) speed adjustment	-20 to 20
Feed2	Conveying motor 2 (CM2) speed adjustment	-50 to 50

2. Change the setting value using the +/- keys or numeric keys.
3. Press the start key. The value is set.

Completion
Press the stop key. The indication for selecting a maintenance item No. appears.

Item No.	Description
U061	**Checking the operation of the exposure lamp** **Description** Lights the exposure lamp. **Purpose** To check whether the exposure lamp are turned on. **Method** 1. Press the start key. 2. Select the item. Display: CCD — Description: The exposure lamp lights 3. Press the start key. The lamp lights. 4. To turn the lamp off, press the stop key. **Completion** Press the stop key. The screen for selecting a maintenance item No. is displayed.
U063	**Adjusting the shading position** **Description** Changes the shading position of the scanner. **Purpose** Used when the white line continue to appear longitudinally on the image after the shading plate is cleaned. This is due to flaws or stains inside the shading plate. To prevent this problem, the shading position should be changed so that shading is possible without being affected by the flaws or stains. **Setting** 1. Press the start key. 2. Select [Position]. 3. Change the setting value using the +/- keys or numeric keys. Display: Position — Description: Shading position — Setting range: 0 to 31 — Initial setting: 0 — Change in value per step: 0.091 mm Increasing the value moves the shading position toward the machine left, and decreasing it moves the position toward the machine right. 4. Press the start key. The value is set. **Supplement** While this maintenance item is being executed, copying from an original is available in interrupt copying mode (which is activated by pressing the system menu key). **Completion** Press the stop key. The screen for selecting a maintenance item No. is displayed.

Item No.	Description
U065	**Adjusting the scanner magnification**

Description
Adjusts the magnification of the original scanning.
Purpose
Make the adjustment if the magnification in the main scanning direction is incorrect.
Make the adjustment if the magnification in the auxiliary scanning direction is incorrect.

Caution
Adjust the magnification of the scanner in the following order.

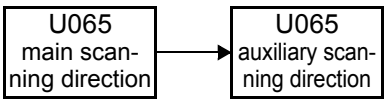

Method
1. Press the start key.
2. Press the system menu key.
3. Place an original and press the start key to make a test copy.
4. Press the system menu key.
5. Select the item to be adjusted.

Display	Description	Setting range	Initial setting	Change in value per step
Y Scan Zoom	Scanner magnification in the main scanning direction	-75 to 75	0	0.02 %
X Scan Zoom	Scanner magnification in the auxiliary scanning direction	-125 to 125	0	0.02 %

Adjustment: [Y Scan Zoom]
1. Change the setting value using the +/- keys or numeric keys.
   For copy example 1, increase the value. For copy example 2, decrease the value.

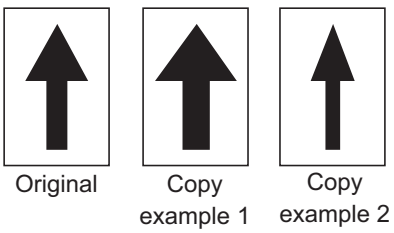

Figure 1-3-7

2. Press the start key. The value is set.

Item No.	Description
U065	**Adjustment: [X Scan Zoom]** 1. Change the setting value using the +/- keys or numeric keys. For copy example 1, increase the value. For copy example 2, decrease the value. 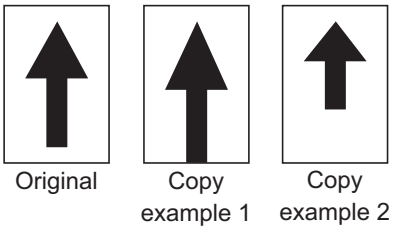 **Figure 1-3-8** 2. Press the start key. The value is set. **Completion** Press the stop key. The screen for selecting a maintenance item No. is displayed.

Item No.	Description
U066	**Adjusting the scanner leading edge registration**

Description
Adjusts the scanner leading edge registration of the original scanning.
Purpose
Make the adjustment if there is a regular error between the leading edges of the copy image and original.

Adjustment
1. Press the start key.
2. Press the system menu key.
3. Place an original and press the start key to make a test copy.
4. Press the system menu key.
5. Select the item to be adjusted.

Display	Description	Setting range	Initial setting	Change in value per step
Front	Scanner leading edge registration	-51 to 51	0	0.091 mm
Rotate	Scanner leading edge registration (rotate copying)	-51 to 51	0	0.100mm

6. Change the setting value using the +/- keys or numeric keys.
   For copy example 1, increase the value. For copy example 2, decrease the value.

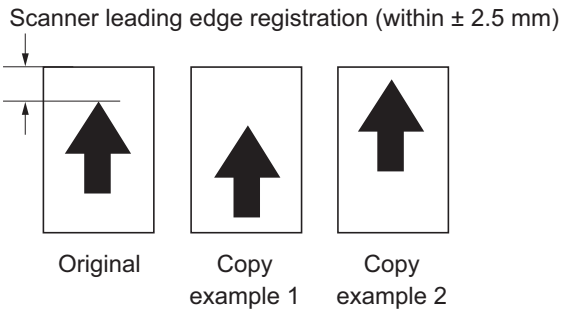

Figure 1-3-9

7. Press the start key. The value is set.

Caution
Check the copy image after the adjustment. If the image is still incorrect, perform the following adjustments in maintenance mode.

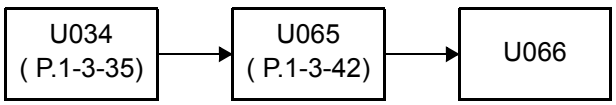

Completion
Press the stop key. The screen for selecting a maintenance item No. is displayed.

Item No.	Description
U067	**Adjusting the scanner center line**

Description
Adjusts the scanner center line of the original scanning.
Purpose
Perform this adjustment if there is a unmatching error between the center lines of the copy image and original.

Adjustment
1. Press the start key.
2. Press the system menu key.
3. Place an original and press the start key to make a test copy.
4. Press the system menu key.
5. Select the item to be adjusted.l

Display	Description	Setting range	Initial setting	Change in value per step
Front	Scanner center line	-60 to 60	0	0.085 mm
Rotate	Scanner center line (rotate copying)	-40 to 40	0	0.085 mm

6. Change the setting value using the +/- keys or numeric keys.
   For copy example 1, increase the value. For copy example 2, decrease the value.

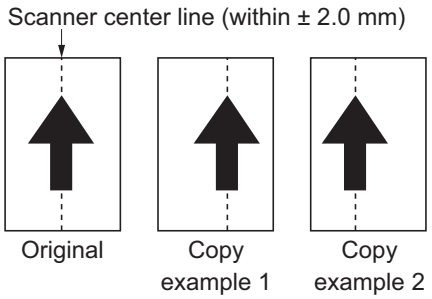

Figure 1-3-10

7. Press the start key. The value is set.

Caution
Check the copy image after the adjustment. If the image is still incorrect, perform the following adjustments in maintenance mode.

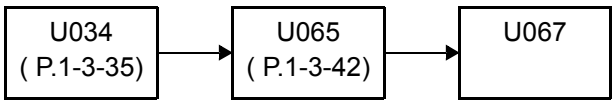

Completion
Press the stop key. The screen for selecting a maintenance item No. is displayed.

Item No.	Description
U068	**Adjusting the scanning position for originals from the DP**

Description
Adjusts the position for scanning originals from the DP. Performs the test copy at the four scanning positions after adjusting.
Purpose
Used when the image fogging occurs because the scanning position is not proper when the DP is used. Run U071 to adjust the timing of DP leading edge when the scanning position is changed.

Setting
1. Press the start key.l

Display	Description	Setting range	Initial setting	Change in value per step
DP Read	Starting position adjustment for scanning originals	-66 to 66	0	0.091 mm
Black Line	Scanning position for the test copy originals	0 to 3	0	-

2. Select [DP Read].
3. Change the setting using the +/- keys or numeric keys.
   When the setting value is increased, the scanning position moves to the right and it moves to the left when the setting value is decreased.
4. Press the start key. The value is set.
5. Select [Black Line].
6. Change the setting using the cursor +/- keys or numeric keys.
7. Press the start key. The value is set.
8. Set the original (the one which density is known) in the DP and press the system menu key.
9. Press the start key. Test copy is executed.
10. Perform the test copy at each scanning position with the setting value from 0 to 3 and check that no black line appears and the image is normally scanned.

Completion
Press the stop key. The screen for selecting a maintenance item No. is displayed.

Item No.	Description
U070	**Adjusting the DP magnification**

Description
Adjusts the DP original scanning speed.
Purpose
Perform this adjustment if the magnification is incorrect in the auxiliary scanning direction when the DP is used.

Adjustment
1. Press the start key.
2. Press the system menu key.
3. Place an original on the DP and press the start key to make a test copy.
4. Press the system menu key.
5. Select the item to be adjusted.l

Display	Description	Setting range	Initial setting	Change in value per step
Sub Scan(F)	Magnification in the auxiliary scanning direction of CCD (first side)	-125 to 125	0	0.02 %
Sub Scan(B)	Magnification in the auxiliary scanning direction of CCD (second side)	-125 to 125	0	0.02 %

Adjustment: [Y Scan Zoom]
1. Change the setting value using the +/- keys or numeric keys.
   For copy example 1, increase the value. For copy example 2, decrease the value.

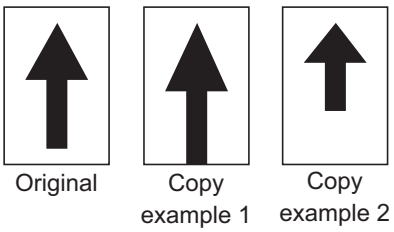

Figure 1-3-11

2. Press the start key. The value is set.

Completion
Press the stop key. The screen for selecting a maintenance item No. is displayed.

Item No.	Description
U071	**Adjusting the DP scanning timing**

Description
Adjusts the DP original scanning timing.
Purpose
Make the adjustment if there is a regular error between the leading or trailing edges of the original and the copy image when the DP is used.

Method
1. Press the start key.
2. Press the system menu key.
3. Place an original on the DP and press the start key to make a test copy.
4. Press the system menu key.
5. Select the item to be adjusted.l

Display	Description	Setting range	Initial setting	Change in value per step
Front Head	Leading edge registration (first side)	-80 to 80	0	0.119 mm
Front Tail	Trailing edge registration (first side)	-80 to 80	0	0.119 mm
Back Head	Leading edge registration (second side)	-80 to 80	0	0.119 mm
Back Tail	Trailing edge registration (second side)	-80 to 80	0	0.119 mm

Adjustment: Front Head
1. Change the setting value using the +/- keys or numeric keys.
   For copy example 1, increase the value. For copy example 2, decrease the value.

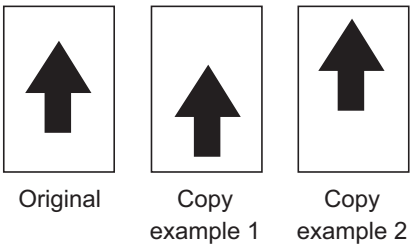

Figure 1-3-12

2. Press the start key. The value is set.

Caution
If the first side is adjusted, check the second side and if adjustment is required, carry out the adjustment.
Check the copy image after the adjustment. If the image is still incorrect, perform the following adjustments in maintenance mode.

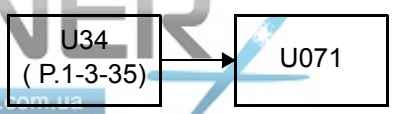

Item No.	Description
U071	**Adjustment:** Front Tail 1. Change the setting value using the cursor left/right keys or numeric keys. For copy example 1, increase the value. For copy example 2, decrease the value. 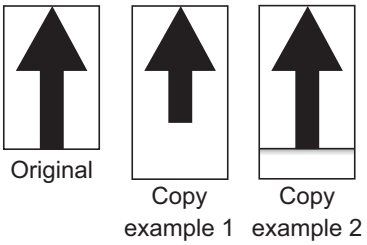 **Figure 1-3-13** 2. Press the start key. The value is set. **Caution** If the first side is adjusted, check the second side and if adjustment is required, carry out the adjustment. Check the copy image after the adjustment. If the image is still incorrect, perform the following adjustments in maintenance mode. U071 → U404 (P.1-3-107) **Completion** Press the stop key. The screen for selecting a maintenance item No. is displayed.

Item No.	Description
U072	**Adjusting the DP center line**

Description
Adjusts the scanning start position for the DP original.
Purpose
Perform the adjustment if there is a regular error between the centers of the original and the copy image when the DP is used.

Adjustment
1. Press the start key.
2. Press the system menu key.
3. Place an original on the DP and press the start key to make a test copy.
4. Press the system menu key.
5. Select the item to be adjusted.l

Display	Description	Setting range	Initial setting	Change in value per step
Front	DP center line (first side)	-60 to 60	0	0.085 mm
Back	DP center line (second side)	-60 to 60	0	0.085 mm

6. Change the setting value using the +/- keys or numeric keys.
   For copy example 1, increase the value. For copy example 2, decrease the value.

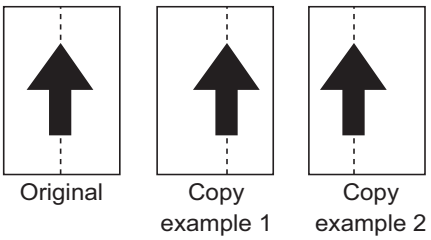

Figure 1-3-14

7. Press the start key. The value is set.

Caution
If the first side is adjusted, check the second side and if adjustment is required, carry out the adjustment.
Check the copy image after the adjustment. If the image is still incorrect, perform the following adjustments in maintenance mode.

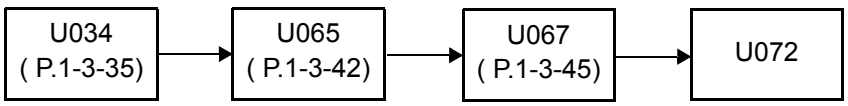

Completion
Press the stop key. The screen for selecting a maintenance item No. is displayed.

Item No.	Description
U073	**Checking the scanner operation**

Description
Simulates the scanner operation under the arbitrary conditions.
Purpose
To check the scanner operation. This is also done to check the accumulation of dust on the slit glass.

Method
1. Press the start key.
2. Select the item to be operated.

Display	Description
Scanner Motor	Scanner operation
Home Position	Home position operation
Dust Check	Dust adhesion check operation with lamp on
DP Reading	DP scanning position operation

Setting: [Scanner Motor]
1. Select [Scanner Motor].
2. Select the item.
3. Change the setting using the +/- keys or numeric keys.

Display	Operating conditions	Setting range
Zoom	Magnification	25 to 400 %
Size	Original size	See below.
Lamp	On and off of the exposure lamp	0 (off) or 1 (on)

Original sizes for each setting in SIZE

Setting	Paper size	Setting	Paper size
5000	A4	5000	A5R
4300	B5	7800	Folio
5100	11" x 8 1/2"	10200	11" x 17"
10000	A3	9000	11" x 15"
8600	B4	8400	8 1/2" x 14"
7100	A4R	6600	8 1/2" x 11"
6100	B5R	5100	5 1/2" x 8 1/2"

4. Press the start key. The setting is set.
5. Select [Execute].
6. Press the start key. Scanning starts under the selected conditions.
7. To stop operation, press the stop key.

<table>
<tr><th>Item No.</th><th>Description</th></tr>
<tr><td>U073</td><td>

Method: [Home Position]

1. Select [Home Position].
2. Press the start key.
   The mirror frame of the scanner moves to the home position.

Method: [Dust Check]

1. Select [Dust Check].
2. Press the start key. The exposure lamp lights.
3. To turn the exposure lamp off, press the stop key.

Method: [DP Reading]

1. Select [DP Reading].
2. Press the start key.
   The mirror frame of the scanner moves to the reading position.

Completion

Press the stop key when scanning stops. The screen for selecting a maintenance item No. is displayed.

</td></tr>
<tr><td>U074</td><td>

Adjusting the DP input light luminosity

Description

Sets the luminosity correction for scanning originals from the DP.
Purpose
Modify the setting only if a spotted background appears when a bluish original is scanned from the DP.

Setting

1. Press the start key.
2. Change the setting value using the +/- keys or numeric keys.

<table>
<tr><th>Display</th><th>Description</th><th>Setting range</th><th>Initial setting</th></tr>
<tr><td>Coefficient</td><td>DP input light luminosity correction</td><td>0 to 3</td><td>0</td></tr>
</table>

Settings 0: No correction / 1: Slight correction / 2: Medium correction / 3: Strong correction

3. Press the start key. The value is set.

Supplement

While this maintenance item is being executed, copying from an original is available in interrupt copying mode (which is activated by pressing the system menu key).

Completion

Press the stop key. The screen for selecting a maintenance item No. is displayed.

</td></tr>
</table>

Item No.	Description
U087	**Setting DP reading position modification operation**

Description
The presence or absence of dust is determined by comparing the scan data of the original trailing edge and that taken after the original is conveyed past the DP original scanning position. If dust is identified, the DP original scanning position is adjusted for the following originals.
Using image correction to reduce black streaks.

Purpose
When using DP, to solve the problem when black lines occurs due to the dust with respect to original reading position.

Caution
The coordinates of position where documents are scanned are modified when [System Menu] [Adjustment/Maintenance] [Correcting Black Line] is set to [Off].

Method
1. Press the start key.
2. Select the item to be set.

Display	Description
CCD	Setting of standard data when dust is detected.
Black Line	Initialization of original reading position.

Setting: [CCD]
1. Select the item to be set.
2. Change the value using the +/- or numeric keys.

Display	Description	Setting range	Initial setting
R	Lowest density of the R regard as the dust	0 to 255	145
G	Lowest density of the G regard as the dust	0 to 255	145
B	Lowest density of the B regard as the dust	0 to 255	145

3. Press the start key. The value is set.

Method: [Black Line]
1. Select [Clear].
2. Press the start key. The setting is cleared.

Completion
Press the stop key. The screen for selecting a maintenance item No. is displayed.

Item No.	Description
U089	**Outputting a MIP-PG pattern**

Description
Selects and outputs the MIP-PG pattern created in the machine.
Purpose
To check copier status other than scanner when adjusting image printing, using MIP-PG pattern output (with-out scanning).

Method
1. Press the start key.
2. Select the MIP-PG pattern to be output and press the start key.

Display	PG pattern to be output	Purpose
256GRADATION	256-gradation PG	To check the gradation reproducibility
COLOR BELT	Four color belts PG	To check the developer state and the engine section ID
GRAY(C)	Cyan PG	To check the drum quality
GRAY(M)	Magenta PG	To check the drum quality
GRAY(Y)	Yellow PG	To check the drum quality
GRAY(K)	Black PG	To check the drum quality
WHITE	Blank paper PG	To check the drum quality
GRADATION GRAY	5-graduation gray PG	To check for vertical lines on the laser scanner unit
Sample Set	Four color belts PG, Cyan PG, Magenta PG, Yellow PG and Black PG	Pattern output for LLU assurance application

3. Press the system menu key.
4. Press the start key. A MIP-PG pattern is output.

Completion
Press the stop key. The screen for selecting a maintenance item No. is displayed.

Item No.	Description
U099	**Adjusting original size detection** **Description** Checks the operation of the original size sensor and sets the sensing threshold value. **Purpose** To adjust the sensitivity of the sensor and size judgement time if the original size sensor malfunctions frequently due to incident light or the like. **Method** 1. Press the start key. 2. Select the item. The screen for executing each item is displayed.

Display	Description
Data1	Displaying original size sensor transmission data
B/W Level1	B/W LEVEL setting original size sensor threshold value Setting original size judgment time
Data2	Displaying original size sensor transmission data (when DP is installed)

Method: [Data1/Data2]

1. Place the original and close the original cover or DP
2. The light source illuminates and the CCD sensor determines the width of the document. The original size sensor determines the document is vertical or horizontal. (The document is detected two times when the DP is installed.)

Display	Description
Original Area R	Detected original width size for color R
Original Area G	Detected original width size for color G
Original Area B	Detected original width size for color B
Original Area	Detected original width size
Size SW L	Displays the original size sensor (OSS) ON/OFF

Item No.	Description
U099	**Setting: [B/W Level1]** 1. Select an item to be set. 2. Change the setting value using the +/- keys or numeric keys.l

Display	Description	Setting range	Initial setting
Original R1	Original threshold value for color R (near side)	0 to 255	50
Original R2	Original threshold value for color R (center)	0 to 255	50
Original R3	Original threshold value for color R (far side)	0 to 255	50
Original G1	Original threshold value for color G (near side)	0 to 255	50
Original G2	Original threshold value for color G (center)	0 to 255	50
Original G3	Original threshold value for color G (far side)	0 to 255	50
Original B1	Original threshold value for color B (near side)	0 to 255	50
Original B2	Original threshold value for color B (center)	0 to 255	50
Original B3	Original threshold value for color B (far side)	0 to 255	50

Reducing the value increases the sensitivity of the sensor allowing a document with more density to be detected, however, the document mat could be detected as an original document.
If the values vary excessively, mal-detection could occur depending on how a document is placed.

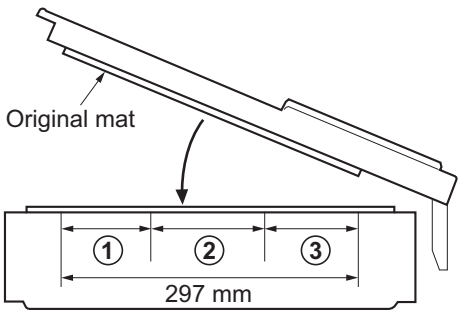

Fig.	Original R/G/B	Original width size range	
①	1	A4R to A3	8.5" to 11"
②	2	B6R to A4R	5.5" to 8.5"
③	3	to B6R	to 5.5"

Figure 1-3-15

3. Press the start key. The value is set.

Completion
Press the stop key. The screen for maintenance item No. is displayed.

Item No.	Description
U100	**Setting the main high voltage** **Description** Controls the charger roller voltage to optimize the surface potential. **Purpose** To change the setting value to adjust the image if an image failure (background blur, etc.) occurs. **Method** 1. Press the start key. 2. Select the item. The screen for executing each item is displayed. **Method:[Bias]** 1. Select the item. The screen for executing each item is displayed. **Setting:[Mode]** 1. Select the item. The screen for executing each item is displayed. Initial setting: Auto

Display	Description
Base	MC DC bias
High Altitude	MC high-ground compensation mode
MCH	MCH compensation
Protect Table	Drum protection control table
Drum Aging	Aging for an electrification roller

Display	Description
Mode	MC compensation mode
Bias	MC DC bias

Display	Description
Auto	Each color radical semi- value display and a degree setup of a standard value
Manual	A value setup of each color

Item No.	Description
U100	

Setting:[Bias]

1. Select an item to be set.
2. Change the setting value using the +/- keys or numeric keys.

Display	Description	Setting range	Initial setting
C	Manual adjustment value (Cyan)	0 to 250	145
M	Manual adjustment value (Magenta)	0 to 250	145
Y	Manual adjustment value (Yellow)	0 to 250	145
K	Manual adjustment value (Black)	0 to 250	145
Default(C)	Manual adjustment base value (Cyan)	0 to 250	-
Default(M)	Manual adjustment base value (Magenta)	0 to 250	-
Default(Y)	Manual adjustment base value (Yellow)	0 to 250	-
Default(K)	Manual adjustment base value (Black)	0 to 250	-

3. Press the start key. The value is set.

Setting:[Bias]

1. Select an item to be set.
2. Change the setting value using the +/- keys or numeric keys.

Display	Description	Setting range	Initial setting
C	MC DC bias (Cyan)	0 to 250	145
M	MC DC bias (Magenta)	0 to 250	145
Y	MC DC bias (Yellow)	0 to 250	145
K	MC DC bias (Black)	0 to 250	145

3. Press the start key. The value is set.

Supplement

While this maintenance item is being executed, copying from an original is available in interrupt copying mode (which is activated by pressing the system menu key).

Item No.	Description
U100	**Setting:[High Altitude]** 1. Select an item to be set. Initial setting: Mode0 * : MCH compensation is set to "3" when it sets to the high ground 1 ,high ground 2 or the high ground 3. * : Plain weight attribute information is set to "Normal 1" when it sets to the high ground 1 ,high ground 2 or the high ground 3. 2. Press the start key. The value is set. **Setting:[MCH]** 1. Change the setting value using the +/- keys or numeric keys. * : A setup is possible only when set to the "standard" by high-ground setup. 2. Press the start key. The value is set. **Setting:[Protect table]** 1. Select an item to be set. Initial setting: Mode0 2. Press the start key. The value is set. **Setting:[Drum Aging]** 1. Select an item to be set. Initial setting: Off 2. Press the start key. The value is set. **Completion** Press the stop key when main charger output stops. The screen for selecting a maintenance item No. is displayed.

Display	Description
Mode0	Standard (Factory setting)
Mode1	High ground 1 (1500 to 2500 m)
Mode2	High ground 2 (2500 m or more)
Mode3	High ground 3 (3500 m or more)

Display	Description	Setting range	Initial setting
Value	MCH compensation	1 to 5	3

Display	Description
Mode0	It changes by drum drive time.
Mode1	Initial fixation

Display	Description
On	with aging (it operates by lapsed time)
Off	with not aging

Item No.	Description
U101	**Setting the voltage for the primary transfer**

Description
Sets the control voltage for the primary transfer.
Purpose
To change the setting when any density problems, such as too dark or light, occur.

Method
1. Press the start key.
2. Select the item. The screen for executing each item is displayed.

Display	Description
Base	Standard value
1st side	Correction value of single-side printing
2nd side	Correction value of duplex printing
B/W	Correction value of monochrome printing

Setting: [Base]
1. Select the item to be set.
2. Change the setting value using the +/- keys or numeric keys.

Display	Description	Setting range	Initial setting
Full	Full speed printing	0 to 100	45
Half	Half speed printing	0 to 100	25

3. Press the start key. The value is set.

Setting: [1st side/02nd side]
1. Select the item to be set.
2. Change the setting value using the +/- keys or numeric keys.

Display	Description	Setting range	Initial setting
C	Correction value (Cyan)	-50 to 50	5/2
M	Correction value (Magenta)	-50 to 50	5/2
Y	Correction value (Yellow)	-50 to 50	0/-3
K	Correction value (Black)	-50 to 50	5/2

3. Press the start key. The value is set.

Item No.	Description
U101	**Setting: [B/W]** 1. Change the setting value using the +/- keys or numeric keys. **Supplement** While this maintenance item is being executed, copying from an original is available in interrupt copying mode (which is activated by pressing the system menu key). **Completion** Press the stop key. The screen for selecting a maintenance item No. is displayed.

Display	Description	Setting range	Initial setting
Value	Correction value	-50 to 50	30

2. Press the start key. The value is set.

Item No.	Description
U106	**Setting the voltage for the secondary transfer**

Description
Sets the control voltage for the secondary transfer.
Purpose
To change the setting when any density problems, such as too dark or light, occur.

Method
1. Press the start key.
2. Select the item. The screen for executing each item is displayed.

Display	Description
Color	Correction value of color printing
B/W	Correction value of monochrome printing

Method:[Color]
1. Select the item. The screen for executing each item is displayed.

Display	Description
Light/Normal1	Weight of paper (light to usual 1)
Normal2/3	Weight of paper (usual 2 to 3)
Heavy1	Weight of paper (heavy 1)
Heavy2/3	Weight of paper (heavy 2 to 3)
OHP	Kind of paper (OHP)
Coated	Kind of paper (Coated paper)

Method: [Light/Normal1 / Normal2/3 / Heavy1 / Heavy2/3]
1. Select the item. The screen for executing each item is displayed.

Display	Description
1st side	Correction value of single-side printing
2nd side	Correction value of duplex printing

Setting:[1st side/2nd side]
1. Select the item to be set.
2. Change the setting value using the +/- keys or numeric keys.

Display	Description	Setting range	Initial setting
Width<160	width of paper<160	0 to 200	83/85/64/54 88/90/68/57
160<=Width<220	160<= width of paper <220	0 to 200	58/60/45/37 60/62/47/37
220<=Width	220<= width of paper	0 to 200	42/44/33/25 40/42/32/25

3. Press the start key. The value is set.

Item No.	Description
U106	

Setting:[OHP/Coated]

1. Select the item to be set.
2. Change the setting value using the +/- keys or numeric keys.

Display	Description	Setting range	Initial setting
Width<160	width of paper<160	0 to 200	40/59
160<=Width<220	160<= width of paper <220	0 to 200	33/42
220<=Width	220<= width of paper	0 to 200	25/31

3. Press the start key. The value is set.

Method:[B/W]

1. Select the item. The screen for executing each item is displayed.

Display	Description
Light/Normal3	Weight of paper (light to usual 3)
Heavy1	Weight of paper (heavy 1)
Heavy2-3	Weight of paper (heavy 2 to 3)

Method: [Light/Normal1 / Heavy1 / Heavy2-3]

1. Select the item. The screen for executing each item is displayed.

Display	Description
1st side	Correction value of single-side printing
2nd side	Correction value of duplex printing

Setting:[1st side/2nd side]

1. Select the item to be set.
2. Change the setting value using the +/- keys or numeric keys.

Display	Description	Setting range	Initial setting
Width<160	width of paper<160	0 to 200	78/60/51 83/64/54
160<=Width<220	160<= width of paper <220	0 to 200	53/41/35 55/43/34
220<=Width	220<= width of paper	0 to 200	40/31/25 38/30/25

3. Press the start key. The value is set.

Completion

Press the stop key. The screen for selecting a maintenance item No. is displayed.

Item No.	Description
U107	**Setting the voltage for the intermediate transfer cleaning**

Description
Sets the control voltage for the intermediate transfer cleaning.
Purpose
To change the setting when the offset by a defective cleaning of the transfer belt is generate.

Method
1. Press the start key.
2. Select the item. The screen for executing each item is displayed.

Display	Description
Belt(A)	Correction value of belt A
Belt(B)	Correction value of belt B
Belt(C)	Correction value of belt C

Setting
1. Select the item to be set.
2. Change the setting value using the +/- keys or numeric keys.

Display	Description	Setting range	Initial setting
Full	Full speed printing of color	0 to 200	13/90/90
Half	Half speed printing of color	0 to 200	9/45/45
3/4	75% of full speed printing of color	0 to 200	10/68/68
B/W Full	Full speed printing of monochrome	0 to 200	13/75/75
B/W Half	Half speed printing of monochrome	0 to 200	10/35/35
B/W 3/4	75% of full speed printing of monochrome	0 to 200	9/53/53

3. Press the start key. The value is set.

Completion
Press the stop key. The screen for selecting a maintenance item No. is displayed.

Item No.	Description
U108	**Setting separation shift bias**

Description
Adjusts output of separation shift bias and ON/OFF timing.
Purpose
To set when the separated malfunction of the paper occurs.

Method
1. Press the start key.
2. Select the item. The screen for executing each item is displayed.

Display	Description
Light/Normal1	Weight of paper (light to usual 1)
Normal2/3	Weight of paper (usual 2 to 3)
Heavy1	Weight of paper (heavy 1)
Coated	Kind of paper (Coated paper)
Timing	Setting of the separation timing

Setting:[Light/Normal1 / Normal2/3 / Heavy1 / Coated]
1. Select the item to be set.
2. Change the setting value using the +/- keys or numeric keys.

Display	Description	Setting range	Initial setting
1st side	Correction value of single-side printing	0 to 40	20/10/10/10
2nd side	Correction value of duplex printing	0 to 40	20/12/10/10

Setting:[Timing]
1. Select the item to be set.
2. Change the setting value using the +/- keys or numeric keys.

Display	Description	Setting range	Initial setting
Add Normal Lead	for the leading edge on paper	0 to 20	3
On Timing 1	Adjustment of the ON Timing 1	-100 to 100	0
On Timing 2	Adjustment of the ON Timing 2	-100 to 100	0
Off Timing	Adjustment of the OFF Timing	-100 to 100	100

3. Press the start key. The value is set.

Completion
Press the stop key. The screen for selecting a maintenance item No. is displayed.

Item No.	Description
U110	**Checking the drum count** **Description** Displays the drum counts for checking. **Purpose** To check the drum status. **Method** 1. Press the start key. The current drum counts is displayed. **Completion** Press the stop key. The screen for selecting a maintenance item No. is displayed.
U111	**Checking the drum drive time** **Description** Displays the drum drive time for checking a figure, which is used as a reference when correcting the high voltage based on time. **Purpose** To check the drum status. **Method** 1. Press the start key. 2. Select the item. The drum drive time is displayed. **Completion** Press the stop key. The screen for selecting a maintenance item No. is displayed.

Display	Description
C	Drum count value for cyan
M	Drum count value for magenta
Y	Drum count value for yellow
K	Drum count value for black

Display	Description
C	Cyan drum drive time
M	Magenta drum drive time
Y	Yellow drum drive time
K	Black drum drive time

Item No.	Description
U117	**Checking the drum number** **Description** Displays the drum number. **Purpose** To check the drum number. **Method** 1. Press the start key. The drum number is displayed. **Completion** Press the stop key. The screen for selecting a maintenance item No. is displayed.
U118	**Displaying the drum history** **Description** Displays the past record of machine number and the drum counter. **Purpose** To check the count value of machine number and the drum counter. **Method** 1. Press the start key. 2. Select the color to reference. * : The history of a machine number and a drum counter for each color is displayed by three cases. **Completion** Press the stop key. The screen for selecting a maintenance item No. is displayed.

Display	Description
C	Cyan drum number
M	Magenta drum number
Y	Yellow drum number
K	Black drum number

Display	Description
C	Cyan drum past record
M	Magenta drum past record
Y	Yellow drum past record
K	Black drum past record

Display	Description
Machine History 1 - 3	Historical records of the machine number
Cnt History 1 - 3	Historical records of drum counter

Item No.	Description
U122	**Checking the transfer belt unit number** **Description** Displays the number of the transfer belt unit for checking. **Purpose** To check the number of the transfer belt. **Method** 1. Press the start key. The current number of the transfer belt is displayed. **Completion** Press the stop key. The screen for selecting a maintenance item No. is displayed.
U123	**Displaying the transfer belt unit history** **Description** Displays the past record of machine number and the transfer belt unit counter. **Purpose** To check the count value of machine number and the transfer counter. **Method** 1. Press the start key. The history of a machine number and a transfer belt unit counter for each color is displayed by three cases. **Completion** Press the stop key. The screen for selecting a maintenance item No. is displayed.

Display	Description
Machine History 1 - 3	Historical records of the machine number
Count History 1 - 3	Historical records of transfer belt unit counter

<table>
<tr><th>Item No.</th><th>Description</th></tr>
<tr><td>U127</td><td>

Checking/clearing the transfer count

Description
Displays and clears the counts of the transfer counter.
Purpose
To check the count after replacement of the transfer belt unit or transfer roller. Also to clear the counts after replacing transfer roller.

Method
1. Press the start key. The current counts of the transfer counter is displayed.

Display	Description
Mid Trans(Cnt)	Transfer belt unit counter value (Cnt)
2nd Trans(Cnt)	Transfer roller counter value (Cnt)
Mid Trans(Time)	Transfer belt unit counter value (Time)
2nd Trans(Time)	Transfer roller counter value (Time)

Clearing
1. Select [Clear].
2. Press the start key. The counter value is cleared.
   Clears only the transfer roller. The transfer belt unit is not cleared.

Completion
Press the stop key. The screen for selecting a maintenance item No. is displayed.

</td></tr>
<tr><td>U135</td><td>

Checking toner motor operation

Description
Drives toner motors.
Purpose
To check the operation of toner motors.

Remarks
When driving the toner motors long time or several times, developer section becomes the toner full and is locked.

Method
1. Press the start key.
2. Select [Toner].
3. Press the start key. The operation starts.

Display	Description
Toner	Toner motor (TM) is turned on

4. To stop the operation, press the stop key.

Completion
Press the stop key after operation stops. The screen for selecting a maintenance item No. is displayed.

</td></tr>
</table>

Item No.	Description
U136	**Setting toner near end detection** **Description** Sets the level that indicates the number of sheets that can be printed from occurrence of toner near end to toner empty. **Purpose** To change the setting to advance detection of near end if the interval from toner near end to toner empty seems too short. **Setting** 1. Press the start key. 2. Select the item to be set. 3. Change the setting value using the +/- keys or numeric keys. Display | Description | Setting range | Initial setting CMY | Setting the level of cyan/magenta/yellow toner | 0 to 10 | 3 K | Setting the level of black toner | 0 to 10 | 3 Increasing the setting makes the interval from toner near end to toner empty longer. Decreasing the setting makes the interval from toner near end to toner empty shorter. If 0 is set, toner near end will not be detected. 4. Press the start key. The value is set. **Completion** Press the stop key. The screen for selecting a maintenance item No. is displayed.
U139	**Displaying the temperature and humidity outside the machine** **Description** Displays the detected temperature and humidity outside the machine. **Purpose** To check the temperature and humidity outside the machine. **Method** 1. Press the start key. The detected temperature are displayed. Display | Description LSU Temp(COL) | Internal temperature around the laser scanner unit (COL) (°C) LSU Temp (K) | Internal temperature around the laser scanner unit (K) (°C) Dev Temp | Internal temperature around the developer section (°C) **Completion** Press the stop key. The screen for selecting a maintenance item No. is displayed.

Item No.	Description
U140	**Setting developer bias**

Description
Setting the value of various developer bias.
Purpose
To check and setting the value of developer bias.

Method
1. Press the start key.
2. Select the item to be set.

Display	Description
Mag DC	Setting the value of magnet DC bias.
Sleeve DC	Setting the value of sleeve DC bias.
Clock Freq	Setting the value of clock frequency.
Clock Duty	Setting the value of clock duty.
AC Ctrl	Setting the value of AC control voltage.
On Timing	Setting the value of developer On timing.
Off Timing	Setting the value of developer Off timing.

Setting: [Mag DC/Sleeve DC/Clock Freq/Clock Duty/AC Ctrl]
1. Select the item to be set.
2. Change the setting value using the +/- keys or numeric keys.

Display	Description	Initial setting
C	Setting the value of cyan.	480/180/36/37/1500
M	Setting the value of magenta.	480/180/36/37/1500
Y	Setting the value of yellow.	450/150/36/37/1500
K	Setting the value of black.	450/150/36/37/1500
Remove C	Setting the value of remove cyan.	100/200/36/33/1150
Remove M	Setting the value of remove magenta.	100/200/36/33/1150
Remove Y	Setting the value of remove yellow.	100/200/36/33/1150
Remove K	Setting the value of remove black.	100/200/36/33/1150
Remove C Half	Setting the value of remove cyan Half.	350/150/36/33/1150
Remove M Half	Setting the value of remove magenta Half.	350/150/36/33/1150
Remove Y Half	Setting the value of remove yellow Half.	350/150/36/33/1150
Remove K Half	Setting the value of remove black Half.	350/150/36/33/1150

3. Press the start key. The value is set.

<table>
<tr><th>Item No.</th><th>Description</th></tr>
<tr><td>U140</td><td>

Setting: [On Timing/On Timing]

1. Select the item to be set.
2. Change the setting value using the +/- keys or numeric keys.

Display	Description	Setting range	Initial setting
C	Setting the value of cyan.	-500 to 500	0/0
M	Setting the value of magenta.	-500 to 500	0/0
Y	Setting the value of yellowt.	-500 to 500	0/0
K	Setting the value of black.	-500 to 500	0/0

3. Press the start key. The value is set.

Completion

Press the stop key. The screen for selecting a maintenance item No. is displayed.

</td></tr>
<tr><td>U147</td><td>

Setting for toner applying operation

Description

Sets the mode for removing charged toner in the developer unit (T7 control: Toner applying operation).

Purpose

Changing settings are not required. However, when the documents with lower print density (e.g. less than 2%) should customarily printed in a great volume, mode must be changed.
If the charged toner stays inside the developer unit, density decreases.

Setting

1. Press the start key
2. Select the item to be set.
3. Change the setting value using the +/- keys or numeric keys.

Display	Description	Setting range	Initial setting
T7	T7 Operational mode	0 to 1	0
Drum T7	Drum T7 operational mode	0 to 255	60

4. Press the start key. The setting is set.

Completion

Press the stop key. The screen for selecting a maintenance item No. is displayed.

</td></tr>
</table>

Item No.	Description
U150	**Checking sensors for toner** **Description** Displays the on-off status of each sensor or switch related to toner. **Purpose** To check if the sensors and switches operate correctly. **Method** 1. Press the start key. 2. Select the item. The screen for executing each item is displayed. **Method: [T/C]** 1. Turn each switch or sensor on and off manually to check the status. When a switch or sensor is detected to be in the ON position, the display for that switch or sensor will be “1” 2. To stop motor driving, press the stop key.

Display	Description
T/C	Displays the state of the toner sensor.
Waste Box	Displays the state of the waste toner box.

Display	Switches and sensors
T/C Sensor (C)	Displays the state of the toner sensor (Cyan).
T/C Sensor (M)	Displays the state of the toner sensor (Magenta).
T/C Sensor (Y)	Displays the state of the toner sensor (Yellow).
T/C Sensor (K)	Displays the state of the toner sensor (Black).
Motor	Drives developer motor, developer clutch.
Last print (C)	Displays the state of the toner sensor at the time of the last printing (Cyan).
Last print (M)	Displays the state of the toner sensor at the time of the last printing (Magenta).
Last print (Y)	Displays the state of the toner sensor at the time of the last printing (Yellow).
Last print (K)	Displays the state of the toner sensor at the time of the last printing (Black).

<table>
<tr><th>Item No.</th><th>Description</th></tr>
<tr><td>U150</td><td>

Method: [Waste Box]

1. Turn each switch or sensor on and off manually to check the status.
   When a switch or sensor is detected to be in the ON position, the display for that switch or sensor will be “1”

Display	Switches and sensors
Waste Box Sensor	Displays the state of the waste toner box.
Motor	Drives developer motor, developer clutch.

2. To stop motor driving, press the stop key.

Completion
Press the stop key. The screen for selecting a maintenance item No. is displayed.

</td></tr>
<tr><td>U157</td><td>

Checking the developer drive time

Description
Displays the developerdrive time for checking a figure, which is used as a reference when correcting the toner control.
Purpose
To check the developer drive time after replacing the developer unit.

Method

1. Press the start key. The developer drive time of each color is displayed.

Display	Description
C	Cyan developer drive time (min)
M	Magenta developer drive time (min)
Y	Yellow developer drive time (min)
K	Black developer drive time (min)

Completion
Press the stop key. The screen for selecting a maintenance item No. is displayed.

</td></tr>
</table>

Item No.	Description
U158	**Checking the developer count** **Description** Displays the developer count for checking. **Purpose** To check the developer unit status. **Method** 1. Press the start key. The current developer counts is displayed. **Completion** Press the stop key. The screen for selecting a maintenance item No. is displayed.

Display	Description
C	Developer count value for cyan
M	Developer count value for magenta
Y	Developer count value for yellow
K	Developer count value for black

Item No.	Description
U161	**Setting the fuser control temperature**

Description
Changes the fuser control temperature and control temperature correction value and other set values.
Purpose
Normally no change is necessary. However, this mode can be used to prevent curling or creasing of paper, or solve a fuser problem on thick paper.

Setting
1. Press the start key.
2. Select the item to be set.
3. Change the setting value using the +/- keys or numeric keys.

Display	Description	Setting range	Initial setting
Copy Curb(Edge)	Prevention temperature of overtemperature rise under copy	100 to 250	210
Curb(Edge)	Prevention temperature of overtemperature rise	100 to 250	240
Return(Edge)	Return temperature of overtemperature rise	100 to 250	190
Ready(Edge)	Ready display temperature	0 to 200	110
Pressure(Press)	Pressurizing beginning temperature	0 to 200	100
High speed(Center)	Full speed shift temperature	0 to 200	125
Ready(Center)	Ready display temperature	100 to 200	150
Drive(Center)	The second stability temperature	100 to 200	155
Full speed(Center)	Print control temperature	100 to 200	155
Wait(Center)	Control temperature when being standing by	100 to 200	130
WarmUp Curb(Center)	Electric power control temperature at start-up	0 to 200	150
Curb(Center)	Prevention temperature of overtemperature rise	170 to 250	240
Low power(Center)	Low electric power control temperature	0 to 200	90
Ready(Press)	Ready display temperature	0 to 200	50
Curb(Press)	Prevention temperature of overtemperature rise	170 to 250	200
Wait Offset(Press)	Correction temperature when being standing by	0 to 200	95

4. Press the start key. The value is set.

Completion
Press the stop key. The screen for selecting a maintenance item No. is displayed.

Item No.	Description
U163	**Resetting the fuser problem data** **Description** Resets the detection of a service call code indicating a problem in the fuser section. **Purpose** To prevent accidents due to an abnormally high fuser temperature. **Method** 1. Press the start key. 2. Press [Execute]. 3. Press the start key. The fuser problem data is initialized. 4. Turn the main power switch off and on. Allow more than 5 seconds between Off and On.

<table>
<tr><th>Item No.</th><th>Description</th></tr>
<tr><td>U167</td><td>

Checking/setting the fuser count

Description
Displays and sets the fuser count for checking.
Purpose
To check or set the fuser count after replacement of the fuser unit.

Method
1. Press the start key. The fuser count is displayed.

Display	Description
Cnt	Fuser count value
Release(Time)	Fuser drive time (Pressing force)
Press(Time)	Fuser drive time (Decompression)

Clearing
1. Press [Clear].
2. Press the start key. The count is cleared.

Completion
Press the stop key. The screen for selecting a maintenance item No. is displayed.

</td></tr>
<tr><td>U169</td><td>

Checking/setting the fuser power source

Description
Displays and settings the reference voltage of the fuser IH PWB.
Purpose
To check the reference voltage.

Method
1. Press the start key.
2. Select the mode.

Display	Description	Setting range
Mode	Reference voltage	1 to 4

1: 100 V specifications 2: 200 V specifications 3: 120 V specifications
4: 110 V specifications
3. Press the start key. The setting is set.

Completion
Press the stop key. The screen for selecting a maintenance item No. is displayed.

</td></tr>
</table>

Item No.	Description
U199	**Displaying fuser heater temperature** **Description** Displays the detected fuser temperature. **Purpose** To check the fuser temperature. **Method** 1. Press the start key. The current setting is displayed. **Completion** Press the stop key. The screen for selecting a maintenance mode No. is displayed.
U200	**Turning all LEDs on** **Description** Turns all the LEDs on the operation panel on. **Purpose** To check if all the LEDs on the operation panel light. **Method** 1. Press the start key. 2. Select [Execute]. 3. Press the start key.All the LEDs on the operation panel light. 4. Press the stop key. The LEDs turns off. **Completion** Press the stop key. The screen for selecting a maintenance item No. is displayed.

Display	Description
Fix Press	Press roller center temperature (°C)
Fix Edge	Heat roller edge temperature (°C)
Fix Center	Heat roller center temperature (°C)

Item No.	Description
U201	**Initializing the touch panel** **Description** Automatically correct the positions of the X- and Y-axes of the touch panel. **Purpose** To automatically correct the display positions on the touch panel after it is replaced. **Method** 1. Press the start key. 2. Select the [Initialize] or [Check]. **Method: [Initialize]** 1. Press the start key. 2. Press the center of the + keys. Be sure to press three + keys displayed in order. The touch panel is adjusted automatically. 3. Press the indicated three + keys, and then check the display. 4. Press the stop key. The screen for selecting a maintenance item No. is displayed. **Method: [Check]** 1. Press the start key. 2. Press the indicated three + keys, and then check the display. When adjusting the display, press [Initialize] to execute the adjustment automatically. 3. Press the stop key. The screen for selecting a maintenance item No. is displayed. **Completion** Press the stop key. The screen for selecting a maintenance item No. is displayed.

Display	Description
Initialize	Adjusts the display on the panel automatically
Check	Checks the display on the touch panel

Item No.	Description
U202	**Setting the KMAS host monitoring system**

Description
Initializes or operates the KMAS host monitoring system.
This is an optional device which is currently supported only by Japanese specification machines, so no setting is necessary.
Purpose
Performed at installation, periodic maintenance, and/or repair.

Method
1. Press the start key.
2. Select the item.

Display	Description
Init/Set TEL No.	Initialization/Phone Nbr. se
Call Service End	Outgoing at the end of service activities

Method: [Init/Set TEL No.]
1. Select the item to be input.

Display	Description
TEL No. 1	Sales companies
TEL No. 2	Call center

2. Input the telephone number using the numeric keys.
3. Press the start key. The setting is set.
4. Select [Initialize].
5. Select [Execute].
6. Press the start key. Communication with the host initiated.
7. The result of communication will be displayed. (Refer to the result.)

Method: [Call Service End]
1. Select [Execute].
2. Press the start key. Communication with the host initiated.
3. The result of communication will be displayed. (Refer to the result.)

Result table

Display	Description
OK	Communication properly terminated.
NG	Communication error (Nbr. of calls exceeded) Communication error (Communication timeout) Communication error (Communication trial timeout) Communication error (Other) KMAS unreachable

Completion
Press the stop key. The screen for selecting a maintenance item No. is displayed.

Item No.	Description
U203	**Checking DP operation** **Description** Simulates the original conveying operation separately in the DP. **Purpose** To check the DP operation. **Method** 1. Press the start key. 2. Place an original in the DP if running this simulation with paper. 3. Select the speed to be operated. **Display** / **Description** Normal Speed — Normal reading (600 dpi) High Speed — High-speed reading 4. Select the item to be operated. **Display** / **Description** CCD ADP — With paper, single-sided original of CCD CCD RADP — With paper, double-sided original of CCD 5. Press the start key. The operation starts. 6. To stop continuous operation, press the stop key. **Completion** Press the stop key. The screen for selecting a maintenance item No. is displayed.

Item No.	Description
U204	**Setting the presence or absence of a key card or key counter** **Description** Sets the presence or absence of the optional key card or key counter. **Purpose** To run this maintenance item if a key card or key counter is installed. **Method** 1. Press the start key. 2. Select the item to be set. **Display** / **Description** Device — Sets the presence or absence of the key card or key counter Message — Sets the message when optional equipment is not installed **Setting: [Device]** 1. Select the optional counter to be installed. **Display** / **Description** Key-Card — The key card is installed Key-Counter — The key counter is installed Off — Not installed Initial setting: Off 2. Press the start key. The setting is set. 3. Turn the main power switch off and on. Allow more than 5 seconds between Off and On. **Setting: [MESSAGE]** 1. Select the [Key Device] or [Coin Vender]. 2. Press the start key. The setting is set. 3. Turn the main power switch off and on. Allow more than 5 seconds between Off and On. **Completion** Press the stop key. The screen for selecting a maintenance item No. is displayed.

Item No.	Description
U206	**Setting the presence or absence of a coin vender**

Description
Sets the presence or absence of the optional coin vender.
This is an optional device which is currently supported only by Japanese specification machines.
Purpose
To run this maintenance item if a coin vender is installed.

Method
1. Press the start key.
2. Select the item to be set.

Display	Description
On/Off Config	Sets the presence or absence of the coin vender
No Coin Action	Behavior when change runs out during copying
Price	Charge per copy by size and color
Boot Mode	Setting the starting mode

Setting: [On/Off Config]
1. Select On or Off.

Display	Description
On	The coin vender is installed
Off	The coin vender is not installed

Initial setting: Off
2. Press the start key. The setting is set.
3. Turn the main power switch off and on. Allow more than 5 seconds between Off and On.

Setting: [No Coin Action]
1. Select the item.

Display	Description
All Clear	All clear is performed
Auto Clear	Auto clear is performed
Off	Clear is not performed

Initial setting: Off
2. Press the start key. The setting is set.
3. Turn the main power switch off and on. Allow more than 5 seconds between Off and On.

Setting: [Price]
1. Select the item to be set.

Display	Description
Normal	Normal
AD	Advertising copy
Print	Printing division money

Item No.	Description
U206	

Setting: [Normal/AD]

1. Select the item of unit price to be set.

Display	Description
B/W	Black & White
CMY	Single color C, M, Y
RGB	Single color R, G, B
Full Color	Full color

2. Select the paper size to be set.
3. Change the setting value using the +/- keys or numeric keys.

Display	Description	Setting range	Initial setting	
			B/W	CMY/RGB Full Color
A3-Ledger	A3/Ledger size	0 to 300	10	100
B4	B4 size	0 to 300	10	50
Card	Post card	0 to 300	10	30
Other	Other	0 to 300	10	50

In 10-yen increments
Value of 0 allows non-restricted copying. (At a periodic maintenance, etc.)

4. Press the start key. The value is set.
5. Turn the main power switch off and on. Allow more than 5 seconds between Off and On.

Setting: [Print]

1. Select the item of unit price to be set.

Display	Description
B/W	Black & White
Full Color	Full color

2. Select the paper size to be set.
3. Change the setting value using the +/- keys or numeric keys.

Display	Description	Setting range	Initial setting	
			B/W	Full Color
A3-Ledger	A3/Ledger size	0 to 300	10	100
B4	B4 size	0 to 300	10	50
Card	Post card	0 to 300	10	30
Other	Other	0 to 300	10	50

In 10-yen increments
Value of 0 allows non-restricted copying. (At a periodic maintenance, etc.)

4. Press the start key. The value is set.
5. Turn the main power switch off and on. Allow more than 5 seconds between Off and On.

<table>
<tr><th>Item No.</th><th>Description</th></tr>
<tr><td>U206</td><td>
Setting: [Boot Mode]
1. Select the item.
<table>
<tr><th>Display</th><th>Description</th></tr>
<tr><td>Normal</td><td>Normal screen</td></tr>
<tr><td>Copy Service</td><td>copy service screen</td></tr>
</table>
Initial setting: Normal
2. Press the start key. The setting is set.
3. Turn the main power switch off and on. Allow more than 5 seconds between Off and On.

Completion
Press the stop key. The screen for selecting a maintenance item No. is displayed.
</td></tr>
<tr><td>U207</td><td>
Checking the operation panel keys

Description
Checks operation of the operation panel keys.
Purpose
To check operation of all the keys and LEDs on the operation panel.

Method
1. Press the start key. The screen for executing is displayed.
2. [Count0] is displayed and the leftmost LED on the operation panel lights.
3. As the keys lined up in the same line as the lit indicator are pressed in the order from the top to the bottom, the figure shown on the touch panel increases in increments of 1. When all the keys in that line are pressed and if there are any LEDs corresponding to the keys in the line on the immediate right, the top LED in that line will light.
4. When all the keys on the operation panel have been pressed, all the LEDs light for up to 10 seconds.

Completion
Press the stop key. The screen for selecting a maintenance item No. is displayed.
</td></tr>
</table>

Item No.	Description
U221	**Setting the USB host lock function** **Description** Specifies ON/OFF the USB host lock function. Setting this to ON causes the machine to be unable to recognize the device connected to the USB host. **Purpose** Set according to the preference of the user. **Method** 1. Press the start key. 2. Select [Host Lock]. 3. Select On or Off. Display: On — Description: USB host lock function ON Display: Off — Description: USB host lock function OFF Initial setting: Off 4. Press the start key. The setting is set. 5. Turn the main power switch off and on. Allow more than 5 seconds between Off and On.
U222	**Setting the IC card type** **Description** Sets the type of IC card. **Purpose** To change the type of IC card. **Setting** 1. Press the start key. 2. Select the item. Display: Other — Description: The type of IC card is SSFC. Display: SSFC — Description: The type of IC card is not SSFC. * : Initial setting: Other 3. Press the start key. The setting is set. **Completion** Press the stop key. The screen for selecting a maintenance item No. is displayed.

Item No.	Description
U223	**Operation panel lock**

Description
Sets the operation panel lock function.
Purpose
This is performed to inhibit operating and canceling the system menu on the operation panel which may be done by others then an administrator.

Setting
1. Press the start key.
2. Select the item.

Display	Description
Unlock	Release the lock of the operation from the system menu
Partial Lock	Lock the operation from the system menu
Lock	Lock the operation from the system menu and job cancel

Initial setting: Unlock
3. Press the start key. The setting is set.

Item	Partial Lock	Lock
Entering maintenance mode	Prohibited	Prohibited
Entering system menu	Prohibited	Prohibited
Transmission/transmission from document boxes	Prohibited	Prohibited
Entering addressbook add/edit	Prohibited	Prohibited
Entering document box add/edit	Prohibited	Prohibited
Pressing stop key	Permitted	Prohibited
Pressing status/job cancel	Permitted	Prohibited
Disconnecting FAX lines	Permitted	Prohibited

Completion
Press the stop key. The screen for selecting a maintenance item No. is displayed.

Item No.	Description
U224	**Install original panel display**

Description
Changes the image data and the message of the opening screen at the machine startup and the image data and the message of the service call screen to user specified data.
Purpose
Set according to the preference of the user.

Setting
1. Write the image data or the message data to the USB memory.
2. Insert USB memory in USB memory slot of the machine.
3. Turn the main power switch on.
4. Enter the maintenance item.
5. Press the start key.
6. Select the [Install] or [UnInstall].

Display	Description
Install	Installs the image data or the message data
UnInstall	Restores the original image data or message data

7. Select the item.

Display	Description	Display area
Opening Img	Startup screen	Entire start display
Call Img	Service call screen	Graphic display area
Call Msg Top	Service call message 1	Message display area (top)
Call Msg Detail	Service call message 2	Message display area (descriptive area)

8. Press the start key. Installation or uninstallation is started.
9. When normally completed, [OK] is displayed.

Supplement 1
File information

Description	File name	Image size (in pixels)	File format
Startup screen	opening_ext_image.png	Length: 480 Width : 800	PNG
Service call screen	callwin_ext_image.png	Length: 200 Width : 180	PNG
Service call message 1	callwin_ext_mes_top.txt	-	TEXT (Unicode)
Service call message 2	callwin_ext_mes_detail.txt	-	TEXT (Unicode)

<table>
<tr><th>Item No.</th><th>Description</th></tr>
<tr><td>U224</td><td>
Supplement 2
Displaying start display
The pre-installed graphics file is displayed at power on or recovering from sleeping.
Graphics display on service call display
The pre-installed graphics file is displayed at a service call.
How to change the message
Entering #562 (4 letters) using the numeric keypad during a service call display will let service call messages 1 and 2.
How to reset the message display
Reverting the maintenance mode will automatically reset the message to the previous.

Caution
The graphics file for start display must be opaque. (To avoid the background from overlapping at recovering from sleeping.)
The total size of the files installable is approximately 1.8 MB.

Completion
Press the stop key. The screen for selecting a maintenance item No. is displayed.
</td></tr>
<tr><td>U243</td><td>
Checking the operation of the DP motors

Description
Turns the motors or clutches in the DP on.
Purpose
To check the operation of the DP motors and clutches.

Method
1. Press the start key.
2. Select the item to be operated.
3. Press the start key. The operation starts.
<table>
<tr><th>Display</th><th>Description</th></tr>
<tr><td>Conv Motor</td><td>DP paper feed motor (DPPFM) is turned on</td></tr>
<tr><td>Rev Motor</td><td>DP switchback motor (DPSBM) is turned on</td></tr>
<tr><td>Feed Clutch</td><td>DP paper feed clutch (DPPFCL) is turned on</td></tr>
<tr><td>Regist Clutch</td><td>DP registration clutch (DPRCL) is turned on</td></tr>
</table>
4. To turn each motor off, press the stop key.

Completion
Press the stop key when operation stops. The screen for selecting a maintenance item No. is displayed.
</td></tr>
</table>

Item No.	Description
U244	**Checking the DP switches** **Description** Displays the status of the respective switches in the DP. **Purpose** To check if the respective switches in the DP operate correctly. **Method** 1. Press the start key. 2. Turn each switch or sensor on and off manually to check the status. When a switch or sensor is detected to be in the ON position, the display for that switch or sensor will be “1”. **Completion** Press the stop key. The screen for selecting a maintenance item No. is displayed.
U245	**Checking messages** **Description** Displays a list of messages on the touch panel of the operation panel. **Purpose** To check the messages to be displayed. **Method** 1. Press the start key. 2. Change the message using the cursor up/down keys. When a message number is entered with the numeric keys and then the start key is pressed, the message corresponding the specified number is displayed. 3. Change the language using the +/- keys. **Completion** Press the stop key. The screen for selecting a maintenance item No. is displayed.

Display	Switches and sensors
Feed	DP paper feed sensor (DPPFS)
Regist	DP registration sensor (DPRS)
Timing	DP timing sensor (DPTS)
Set	DP original sensor (DPOS)
Longitudinal	DP original size length sensor (DPOLS)
Cover Open	DP interlock switch (DPILSW)
Open	DP open/close sensor (DPOCS)

Item No.	Description
U250	**Checking/clearing the maintenance cycle** **Description** Changes preset values for maintenance cycle and automatic grayscale adjustment. **Purpose** Provides changing the time when the message to acknowledge to conduct maintenance and automatic grayscale adjustment is periodically displayed. **Setting** 1. Press the start key. 2. Select the item to be changed. 3. Change the setting using the +/- keys or numeric keys.

Display	Description	Setting range
M.Cnt A	Preset values for maintenance cycle (A)	0 to 9999999
M.Cnt B	Preset values for maintenance cycle (B)	0 to 9999999
M.Cnt HT	Preset values for automatic grayscale adjustment	0 to 9999999

4. Press the start key. The setting value is set.

Completion
Press the stop key. The screen for selecting a maintenance item No. is displayed.

Item No.	Description
U251	**Checking/clearing the maintenance counter** **Description** Displays and clears or changes the maintenance count and automatic grayscale adjustment count. **Purpose** To verify the maintenance counter count and automatic grayscale count. Also to clear the count during maintenance service. **Setting** 1. Press the start key. 2. Select the item to be changed. 3. Change the setting using the +/- keys or numeric keys. **Display** / **Description** / **Setting range** M.Cnt A / Count value for maintenance cycle (A) / 0 to 9999999 M.Cnt B / Count value for maintenance cycle (B) / 0 to 9999999 M.Cnt HT / Automatic grayscale adjustment count / 0 to 9999999 4. Press the start key. The setting value is set. **Clearing** 1. Select [Clear]. 2. Press the start key. The setting value is cleared. **Completion** Press the stop key. The screen for selecting a maintenance item No. is displayed.

Item No.	Description
U252	**Setting the destination** **Description** Switches the operations and screens of the machine according to the destination. **Purpose** To be executed after initializing the backup RAM, in order to return the setting to the value before replacement or initialization. **Method** 1. Press the start key. 2. Select the destination. **Display** / **Description** Inch — Inch (North America) specifications Europe Metric — Metric (Europe) specifications Asia Pacific — Metric (Asia Pacific) specifications Australia — Australia specifications China — China specifications Korea — Korea specifications 3. Press the start key. 4. Turn the main power switch off and on. * : An error code is displayed in case of an initialization error. When errors occurred, turn main power switch off then on, and execute initialization using maintenance item U252. **Error codes** **Codes** / **Description** 0001 — Entity error 0002 — Controller error 0003 — OS error 0020 — Engine error 0040 — Scanner error

Item No.	Description
U253	**Switching between double and single counts** **Description** Switches the count system for the total counter and other counters for every color mode. **Purpose** Used to select, according to the preference of the user (copy service provider), if A3/Ledger paper is to be counted as one sheet (single count) or two sheets (double count). **Setting** 1. Press the start key. 2. Select the item to set. Display / Description: Full Color — Count system of full color mode Mono Color* — Count system of single color mode B/W — Count system of black/white mode * : Displayed only if the setting of U276 (Setting the copy count mode) is Mode1. 3. Select the count system. Display / Description: SGL(All) — Single count for all size paper DBL(A3/Ledger) — Double count for A3/Ledger size or larger DBL(B4) — Double count for B4 size or larger DBL(Folio) — Double count for Folio size or larger Initial setting: DBL(A3/Ledger) 4. Press the start key. The setting is set. **Completion** Press the stop key. The screen for selecting a maintenance item No. is displayed.

<table>
<tr><th>Item No.</th><th>Description</th></tr>
<tr><td>U260</td><td>

Selecting the timing for copy counting

Description
Changes the copy count timing for the total counter and other counters.
Purpose
To be set according to user request.

Setting
1. Press the start key.
2. Select the copy count timing.

Display	Description
Feed	When secondary paper feed starts
Eject	When the paper is ejected

* : Initial setting: Eject

3. Press the start key. The setting is set.

Completion
Press the stop key. The screen for selecting a maintenance item No. is displayed.

</td></tr>
<tr><td>U265</td><td>

Setting OEM purchaser code

Description
Sets the OEM purchaser code.
Purpose
Sets the code when replacing the main PWB and the like.

Setting
1. Press the start key.
2. Change the setting value using the numeric keys.
3. Press the start key. The setting is set.
4. Turn the main power switch off and on. Allow more than 5 seconds between Off and On.

</td></tr>
</table>

<table>
<tr><th>Item No.</th><th>Description</th></tr>
<tr><td>U276</td><td>

Setting the copy count mode

Description
Sets the count mode of single color mode.
Purpose
To change the charging counter which counts up in single color printing.

Setting
1. Press the start key.
2. Select the mode.

<table>
<tr><th>Display</th><th>Description</th></tr>
<tr><td>Mode0</td><td>This lets the full color counter count up in single color</td></tr>
<tr><td>Mode1</td><td>This lets the single color counter count up in single color</td></tr>
</table>

Initial setting: Mode 0
3. Press the start key. The setting is set.

Completion
Press the stop key. The screen for selecting a maintenance item No. is displayed.

</td></tr>
<tr><td>U278</td><td>

Setting the delivery date

Description
Enter delivery date in month, day, and year.
Purpose
To operate when installing the machine. Perform this to confirm the delivery date.

Method
1. Press the start key.
2. Select [Today].
3. Press the start key. The delivery date is set.

Clearing
1. Select [Clear].
2. Press the start key. The delivery date is cleared.

Completion
Press the stop key. The screen for selecting a maintenance item No. is displayed.

</td></tr>
</table>

Item No.	Description
U284	**Setting 2 color copy mode** **Description** Sets whether to use 2 color copy mode. **Purpose** According to user request, changes the setting. **Setting** 1. Press the start key. 2. Select On or Off. Initial setting: Off If On is selected, 2-color copy will be displayed on the color function screen. 3. Press the start key. The setting is set. **Completion** Press the stop key. The screen for selecting a maintenance item No. is displayed.
U285	**Setting service status page** **Description** Determines displaying the print coverage report on reporting. **Purpose** According to user request, changes the setting. **Setting** 1. Press the start key. 2. Select [On] or [Off]. * : Initial setting: On 3. Press the start key. The setting is set. **Completion** Press the stop key. The screen for selecting a maintenance item No. is displayed.

Display	Description
B/W	2 color copy mode is enabled, monochrome count
Mono Color	2 color copy mode is enabled, monochrome color count
Off	2 color copy mode is disabled

Display	Description
On	Displays the print coverage
Off	Not to display the print coverage

Item No.	Description
U325	**Setting the paper interval** **Description** Determines the interval between pages and the toner replenishment amount when printing pages with high print coverage. **Purpose** Modify the settings only if a spotted background or uneven density appears when printing pages with high print coverage. **Method** 1. Press the start key. 2. Change the setting using the cursor left/right keys or numeric keys. **Display** / **Description** / **Setting range** / **Initial setting** Rank / Setting the rank / 0 to 4 / 1 3. Press the start key. The setting value is set. **Completion** Press the stop key. The screen for selecting a maintenance item No. is displayed.

Item No.	Description
U326	**Setting the black line cleaning indication**

Description
Sets whether to display the cleaning guidance when detecting the black line.
Purpose
Displays the cleaning guidance in order to make the call for service with the black line decrease by the rubbish on the contact glass when scanning from the DP.

Method
1. Press the start key.
2. Select the item to set. The screen for setting each item is displayed.

Display	Description
Black Line Mode	Black line cleaning guidance ON/OFF setting
Black Line Cnt	Setting counts of the cleaning guidance indication

Setting: [Black Line Mode]
1. Select [On] or [Off].

Display	Description
On	Displays the cleaning guidance
Off	Not to display the cleaning guidance

* : Initial setting: On
2. Press the start key. The setting is set.

Setting: [Black Line Cnt]
1. Select [Cnt].
2. Change the setting value using the +/- keys or numeric keys.

Display	Description	Setting range	Initial setting
Cnt	Setting counts of the cleaning guidance indication (x 1000 sheets)	0 to 255	8

* : When setting is 0, the black line cleaning indication is displayed only if the black line is detected.
3. Press the start key. The value is set.

Completion
Press the stop key. The screen for selecting a maintenance item No. is displayed.

Item No.	Description
U332	**Setting the size conversion factor**

Description
Sets the coefficient of nonstandard sizes in relation to the A4/Letter size. The coefficient set here is used to convert the black ratio in relation to the A4/Letter size and to display the result in user simulation.

Purpose
To set the coefficient for converting the black ratio for nonstandard sizes in relation to the A4/Letter size.

Method
1. Press the start key.
2. Select the item to set.

Display	Description
Rate	Size coefficient
Mode	Toggling full-color count and color coverage count display
Level 1	Low coverage threshold value
Level 2	Middle coverage threshold value

Setting: [Rate]
1. Change the setting using the +/-keys or numeric keys.

Display	Description	Setting range	Initial setting
Rate	Size coefficient	0.1 to 3.0	1.0

2. Press the start key. The value is set.

Setting: [Mode]
1. Select the mode.

Display	Description
0	Full-color count display
1	Color coverage count display

Initial setting: 0
2. Press the start key. The setting is set.

Setting: [Level 1/2]
1. Select the item.
2. Change the setting using the +/-keys or numeric keys.

Display	Description	Setting range	Initial setting
Level 1	Low coverage threshold value	0.1 to 99.8	1.0
Level 2	Middle coverage threshold value	0.1 to 99.9	2.5

3. Press the start key. The value is set.

Completion
Press the stop key. The screen for selecting a maintenance item No. is displayed.

Item No.	Description
U340	**Setting the applied mode**

Description
Allocates memory to ensure that there is sufficient memory available for the printer to use as a working area.
Purpose
Modify the memory allocation if insufficient memory for transparency support or XPS direct printing occurs.

Method
1. Press the start key.
2. Select the item to set.

Display	Description
Adj Memory	Setting the memory allocation
Adj Max Job	Setting the maximum of multiple jobs

Setting: [Adj Memory]
1. Change the setting using the +/- keys or numeric keys.

Display	Description	Setting range	Initial setting
Image	Area temporarily used to create output image.	0 to 400 (MB)	190
Image(Detail)	Area temporarily used to hold down-loaded font and other data.	0 to 400 (MB)	1

Set the values below in case print failure occurs with the memory shortage.
(recommended value)
Image : +190
Image(Detaile) : +1
2. Press the start key. The value is set.
3. Turn the main power switch off and on. Allow more than 5 seconds between Off and On.

Supplement
The work area for copy is small and it may cause output failure if the values are large.

Setting: [Adj Max Job]
1. Change the setting using the +/-keys or numeric keys.

Display	Description	Setting range	Initial setting
Copy	Maximum copy (Scan To Print) Jobs	10 to 50	10
Printer	Maximum printer (Host To Print) Jobs	10 to 50	-

The maximum Printer jobs should be (maximum jobs) – (maximum copy jobs).
2. Press the start key. The value is set.

Completion
Press the stop key. The screen for selecting a maintenance item No. is displayed.

Item No.	Description
U341	**Specific paper feed location setting for printing function** **Description** Sets a paper feed location specified for printer output. **Purpose** To use a paper feed location only for printer output. A paper feed location specified for printer output cannot be used for copy output. **Method** 1. Press the start key. 2. Select the paper feed location for the printer. Display / Description: Cassette1 — Cassette 1 Cassette2 — Cassette 2 Cassette3 — Cassette 3 (optional paper feeder) Cassette4 — Cassette 4 (optional paper feeder) * : When an optional paper feed device is not installed, the corresponding count is not displayed. 3. Press the start key. The setting is set. **Completion** Press the stop key. The screen for selecting a maintenance item No. is displayed.
U343	**Switching between duplex/simplex copy mode** **Description** Switches the initial setting between duplex and simplex copy. **Purpose** To be set according to frequency of use: set to the more frequently used mode. **Setting** 1. Press the start key. 2. Select [On] or [Off]. Display / Description: On — Duplex copy Off — Simplex copy * : Initial setting: Off 3. Press the start key. The setting is set. **Completion** Press the stop key. The screen for selecting a maintenance item No. is displayed.

Item No.	Description
U345	**Setting the value for maintenance due indication** **Description** Sets when to display a message notifying that the time for maintenance is about to be reached, by setting the number of copies that can be made before the current maintenance cycle ends. When the difference between the number of copies of the maintenance cycle and that of the maintenance count reaches the set value, the message is displayed. **Purpose** To change the time for maintenance due indication. **Setting** 1. Press the start key. 2. Select [Cnt]. 3. Change the setting using the +/- keys or numeric keys. **Display** / **Description** / **Setting range** / **Initial setting** Cnt / Time for maintenance due indication (Remaining number of copies that can be made before the current maintenance cycle ends) / 0 to 9999 / 0 4. Press the start key. The value is set. **Completion** Press the stop key. The screen for selecting a maintenance item No. is displayed.

Item No.	Description
U402	**Adjusting margins of image printing**

Description
Adjusts margins for image printing.
Purpose
Make the adjustment if margins are incorrect.

Adjustment
1. Press the start key.
2. Press the system menu key.
3. Press the start key to output a test pattern.
4. Press the system menu key.
5. Select the item to be adjusted.

Display	Description	Setting range	Initial setting	Change in value per step
Lead	Printer leading edge margin	0 to 10.0	4.0	0.1 mm
A Margin	Printer left margin	0 to 10.0	3.0	0.1 mm
C Margin	Printer right margin	0 to 10.0	3.0	0.1 mm
Trail	Printer trailing edge margin	0 to 10.0	3.9	0.1 mm

6. Change the setting value using the +/- keys or numeric keys.
   Increasing the value makes the margin wider, and decreasing it makes the margin narrower.

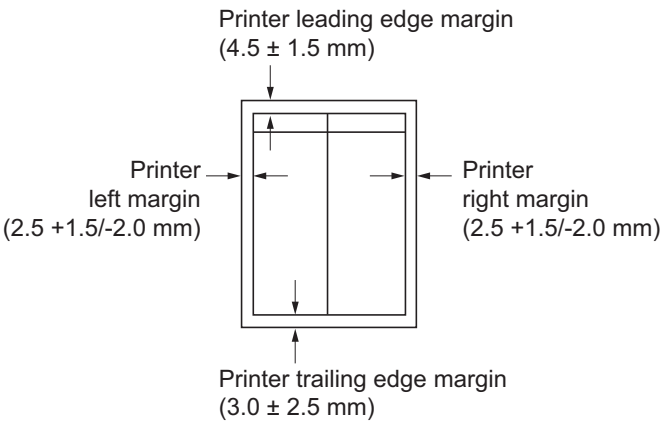

Figure 1-3-16

7. Press the start key. The value is set.

Caution
Check the copy image after the adjustment. If the image is still incorrect, perform the following adjustments in maintenance mode.

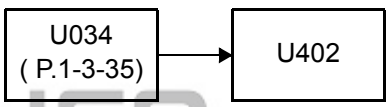

Completion
Press the stop key. The screen for selecting a maintenance item No. is displayed.

Item No.	Description
U403	**Adjusting margins for scanning an original on the contact glass**

Description
Adjusts margins for scanning the original on the contact glass.
Purpose
Perform the adjustment if margins are incorrect.

Adjustment
1. Press the start key.
2. Press the system menu key.
3. Place an original and press the start key to make a test copy.
4. Press the system menu key.
5. Select the item to be adjusted.

Display	Description	Setting range	Initial setting	Change in value per step
A Margin	Scanner left margin	0 to 10.0	2.0	0.5 mm
B Margin	Scanner leading edge margin	0 to 10.0	2.0	0.5 mm
C Margin	Scanner right margin	0 to 10.0	2.0	0.5 mm
D Margin	Scanner trailing edge margin	0 to 10.0	2.0	0.5 mm

6. Change the setting value using the +/- keys or numeric keys.
   Increasing the value makes the margin wider, and decreasing it makes the margin narrower.

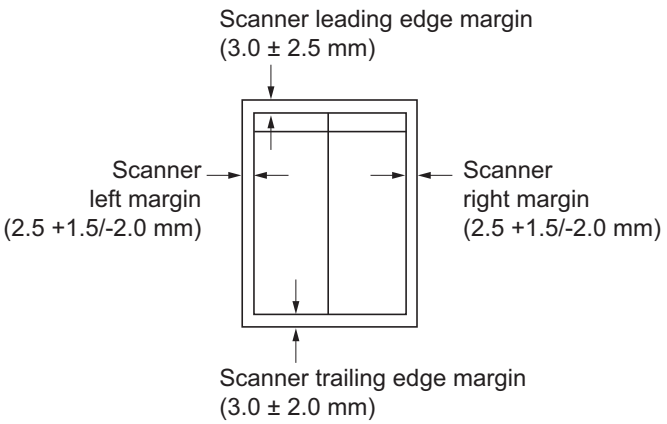

Figure 1-3-17

7. Press the start key. The value is set.

Caution
Check the copy image after the adjustment. If the image is still incorrect, perform the following adjustments in maintenance mode.

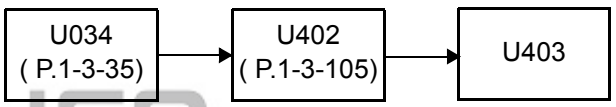

Completion
Press the stop key. The indication for selecting a maintenance item No. appears.

Item No.	Description
U404	**Adjusting margins for scanning an original from the DP**

Description
Adjusts margins for scanning the original from the DP.
Purpose
Perform the adjustment if margins are incorrect.

Caution
Before making this adjustment, ensure that the following adjustments have been made in maintenance mode

U402 (P.1-3-105) → U403 (P.1-3-106) → U404

Adjustment
1. Press the start key.
2. Press the system menu key.
3. Place an original on the DP and press the start key to make a test copy.
4. Press the system menu key.
5. Select the item to be adjusted.

Display	Description	Setting range	Initial setting	Change in value per step
A Margin	DP left margin	0 to 10.0	3.0	0.5 mm
B Margin	DP leading edge margin	0 to 10.0	2.5	0.5 mm
C Margin	DP right margin	0 to 10.0	3.0	0.5 mm
D Margin	DP trailing edge margin	0 to 10.0	4.0	0.5 mm

6. Change the setting value using the +/- keys or numeric keys.
   Increasing the value makes the margin wider, and decreasing it makes the margin narrower.

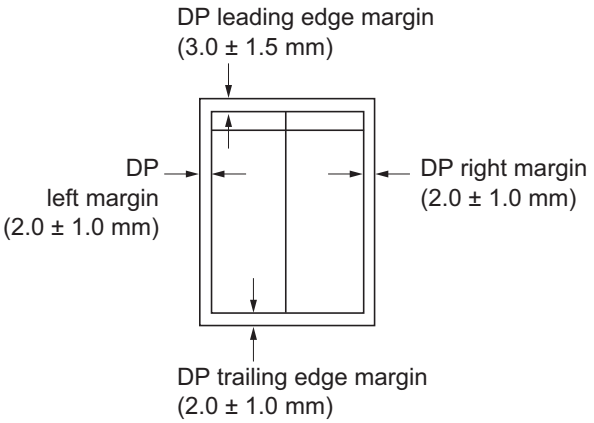

Figure 1-3-18

7. Press the start key. The value is set.

Completion
Press the stop key. The screen for selecting a maintenance item No. is displayed.

Item No.	Description
U407	**Adjusting the leading edge registration for memory image printing**

Description
Adjusts the leading edge registration during memory copying.
Purpose
Perform the following adjustment if there is a regular error between the leading edge of the copy image on the front face and that on the reverse face during duplex switchback copying.

Caution
Before Performing this adjustment, ensure that the following adjustments have been made in maintenance mode.

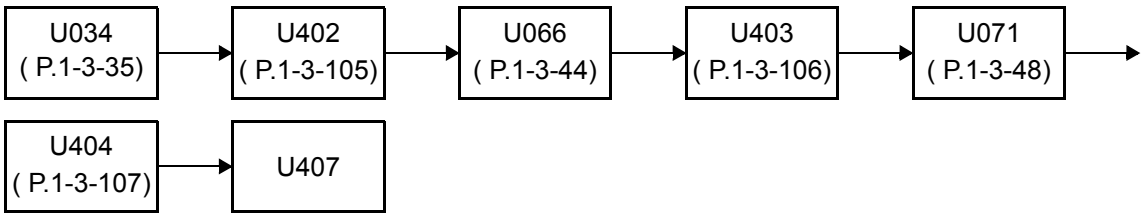

Adjustment
1. Press the start key.
2. Press the system menu key.
3. Place an original and press the start key to make a test copy.
4. Press the system menu key.
5. Select [Adj Data].

Display	Description	Setting range	Initial setting	Change in value per step
Adj Data	Leading edge registration for memory image printing	-47 to 47	0	0.1 dot

6. Change the setting value using the +/- keys or numeric keys.
   For copy example 1, decrease the value. For copy example 2, increase the value.

Figure 1-3-19

7. Press the start key. The value is set.

Completion
Press the stop key. The screen for selecting a maintenance item No. is displayed.

Item No.	Description
U410	**Adjusting the halftone automatically**

Description
Carries out processing for the data acquisition that is required in order to perform either automatic adjustment of the halftone or the ID correction operation. Also the color table is changed.
Purpose
Performed when the quality of reproduced halftones has dropped. Modify the color table settings if the fidelity of characters is to be improved.

Method
1. Press the start key.
2. Select the item.

Display	Description
Normal Mode	Executing the automatic adjustment of the halftone (continuous adjustment)
Setting Table	Switching the color table

Method: [Normal Mode]
1. Select [Normal Mode].
2. Press the start key. A test patterns 1, 2 and 3 are outputted.
3. Place the output test pattern 1 as the original.
   Place approximately 20 sheets of white paper on the test pattern 1 and set them.
4. Press the start key.
   Adjustment is made (first time).
5. Place the output test pattern 2 as the original.
   Place approximately 20 sheets of white paper on the test pattern 2 and set them.
6. Press the start key.
   Adjustment is made (second time).
7. Place the output test pattern 3 as the original.
   Place approximately 20 sheets of white paper on the test pattern 3 and set them.
8. Press the start key.
   Adjustment is made (third time).
9. When normally completed, [Finish] is displayed.
   If a problem occurs during auto adjustment, error code is displayed.

Error codes

Codes	Description	Codes	Description
S001	Patch not detected	E001	Engine status error
S002	Original deviation in the main scanning direction	E002	Engine sensor error
		EFFF	Engine other error
S003	Original deviation in the auxiliary scanning direction	C001	Controller error
		C100	Adjustment value error
S004	Original inclination error	C200	Adjustment value error
S005	Original type error	CFFF	Controller other error
SFFF	Scanner other error		

Item No.	Description
U410	**Method: [Setting Table]** 1. Select the item. Initial setting: Table1 2. Press the start key. The setting is set. **Completion** Press the stop key. The screen for selecting a maintenance item No. is displayed.

Display	Description
Table1	Normal color table
Table2	Color tables for improving reproduction of characters at black and white printing
Table3	More fidelity than Table2

Item No.	Description
U411	**Adjusting the scanner automatically**

Description
Uses a specified original and automatically adjusts the following items in the scanner and the DP scanning sections.
Purpose
To perform automatic adjustment of various items in the scanner and the DP scanning sections. Perform adjustments using a new test chart (chart 1) when replacing ISC PWB, LED lamp PWB, ISU, DP main PWB.

Method
1. Press the start key.
2. Select the item.

Display	Description	Original to be used for adjustment (P/N)
Table (Chart1)	Automatic adjustment in the scanner section (chart 1)	7505000005
DP FaceUp (Chart1)	Do not use. Automatic adjustment in the DP scanning section (first side) (chart 1)	7505000005
Table (Chart2)	Automatic adjustment in the scanner section (chart 2)	302FZ56990
DP FaceUp (Chart2)	Automatic adjustment in the DP scanning section (first side) (chart 2)	302AC68243
Target	Set-up for obtaining the target value	-
DP Auto Adj	Automatic adjustment of automatic document processor using the chart printed from the machine	-

Method: [Table (Chart1)]
To manually enter the target value
1. Enter the target values which are shown at the bottom of the specified original (P/N: 7505000005) executing maintenance item U425.
2. Set a specified original on the platen.
3. Enter maintenance item U411.
4. Select [Target].
5. Select [U425] and press the start key.
6. Select [Table (Chart1)].
7. Select the item.

Item No.	Description
U411	To automatically enter the target value 1. Enter the value for [Adjust Original] using maintenance item U425. 2. Set a specified original (P/N: 7505000005) on the platen. 3. Enter maintenance item U411. 4. Select [Target]. 5. Select [Auto] and press the start key. 6. Select [Table (Chart1)]. 7. Select the item.

Display	Description
All	Executing the all scanner adjustment
LED/AGC	Executing the adjustment for LED light quantity/AGC
White	Executing the white reference compensation coefficient
C.A.	Executing the adjustment for chromatic aberration filter
MTF	Executing the adjustment for MTF filter
Gamma	Executing the adjustment for input gamma
Matrix	Executing the adjustment for matrix

8. Press the start key. Auto adjustment starts.
   * : When automatic adjustment has normally completed, [OK] is displayed. If a problem occurs during auto adjustment, error code is displayed and operation stops. Should this happen, determine the details of the problem and repeat the procedure from the beginning.

Method: [DP FaceUp (Chart1)]

To manually enter the target value
1. Enter the target values which are shown at the bottom of the specified original (P/N: 7505000005) executing maintenance item U425.
2. Set a specified original on the DP face up.
   * : When running this test chart, you first must clean the feed rollers with alcohol and ensure the DP width guides are correctly positioned against the original.
3. Enter maintenance item U411.
4. Select [Target].
5. Select [U425] and press the start key.
6. Select [DP FaceUp (Chart1)].
7. Select [Input].

To automatically enter the target value
1. Enter the value for [Adjust Original] using maintenance item U425.
2. Set a specified original (P/N: 7505000005) on the DP face up.
   * : When running this test chart, you first must clean the feed rollers with alcohol and ensure the DP width guides are correctly positioned against the original.
3. Enter maintenance item U411.
4. Select [Target].
5. Select [Auto] and press the start key.
6. Select [DP FaceUp (Chart1)].
7. Select [Input].

Item No.	Description
U411	

Display	Description
Input	Executing the adjustment for input gamma and matrix

8. Press the start key. Auto adjustment starts.
   * : When automatic adjustment has normally completed, [OK] is displayed. If a problem occurs during auto adjustment, error code is displayed and operation stops. Should this happen, determine the details of the problem and repeat the procedure from the beginning.

Method: [Table (Chart2)]

1. Enter the target values which are shown on the back of the specified original (P/N: 302FZ56990) executing maintenance item U425.
2. Set a specified original on the platen.
3. Enter maintenance item U411.
4. Select [Target].
5. Select [U425] and press the start key.
6. Select [Table (Chart2)].
7. Select the item.

Display	Description
All	Executing the all scanner adjustment
Input	Executing the adjustment for magnification, leading edge timing and center line
C.A.	Executing the adjustment for chromatic aberration filter
MTF	Executing the adjustment for MTF filter
Gamma	Executing the adjustment for input gamma
Matrix	Executing the adjustment for matrix

8. Press the start key. Auto adjustment starts.
   * : When automatic adjustment has normally completed, [OK] is displayed. If a problem occurs during auto adjustment, error code is displayed and operation stops. Should this happen, determine the details of the problem and repeat the procedure from the beginning.

Item No.	Description
U411	**Method: [DP FaceUp (Chart2)]** 1. Measure the leading edge, main scanning, and auxiliary scanning of the specified original (P/N: 302AC68243) and enter the values by executing maintenance item U425. 2. Set a specified original (P/N: 302AC68243) on the DP. * : When running this test chart, you first must clean the feed rollers with alcohol and ensure the DP width guides are correctly positioned against the original. * : Cut the trailing edge of the original. 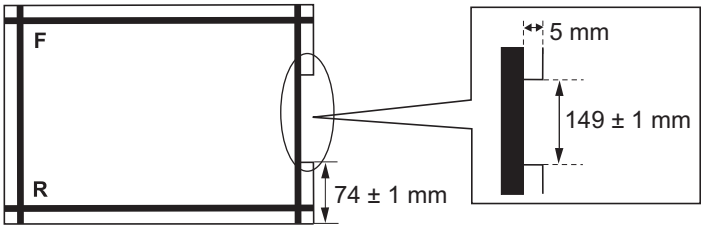 **Figure 1-3-20** 3. Enter maintenance item U411. 4. Select [Target]. 5. Select [U425] and press the start key. 6. Select [DP FaceUp (Chart2)]. 7. Select [INPUT]. Display: Input Description: Executing the adjustment in the DP scanning section (first side) for magnification, leading edge timing and center line 8. Press the start key. Auto adjustment starts. * : When automatic adjustment has normally completed, [OK] is displayed. If a problem occurs during auto adjustment, error code is displayed and operation stops. Should this happen, determine the details of the problem and repeat the procedure from the beginning.

Item No.	Description
U411	**Method: [DP Auto Adj]** 1. Load A4/letter paper. 2. Press the start key to output the original for adjustment. 3. Set the output the original for adjustment and press the start key. 4. Set the output the original for adjustment on the DP face up. 5. Press the start key to scan documents. 6. Press the start key. Auto adjustment of first side starts. 7. Set the output the original for adjustment on the DP face down. 8. Press the start key to scan documents. 9. Press the start key. Auto adjustment of second side starts. * : When automatic adjustment has normally completed, [OK] is displayed. If a problem occurs during auto adjustment, error code is displayed and operation stops. Should this happen, determine the details of the problem and repeat the procedure from the beginning. **Error Codes**

Codes	Description
01	Black band detection error (scanner auxiliary scanning direction leading edge skew)
02	Black band detection error (scanner main scanning direction far end skew)
03	Black band detection error (scanner main scanning direction near end skew)
03	Black band detection error (scanner auxiliary scanning direction trailing edge skew)
04	Black band is not detected (scanner auxiliary scanning direction leading edge)
05	Black band is not detected (scanner main scanning direction far end)
06	Black band is not detected (scanner main scanning direction near end)
07	Black band is not detected (scanner auxiliary scanning direction trailing edge)
08	Black band is not detected (DP main scanning direction far end)
09	Black band is not detected (DP main scanning direction near end)
0a	Black band is not detected (DP auxiliary scanning direction leading edge)
0b	Black band is not detected (DP auxiliary scanning direction leading edge original check)
0c	Black band is not detected (DP auxiliary scanning direction trailing edge)
0d	White band is not detected (DP auxiliary scanning direction trailing edge)
0e	DMA time out
0f	Auxiliary scanning direction magnification error
10	Auxiliary scanning direction leading edge error
11	Auxiliary scanning direction trailing edge error

Item No.	Description
U411	**Error Codes**

Codes	Description
12	DP uxiliary scanning direction skew error
13	Maintenance request error
14	Main scanning direction center line error
15	DP main scanning direction skew error
16	Main scanning direction magnification error
17	Service call error
18	DP paper misfeed error
19	PWB replacement error
1a	Original error
1b	Input gamma adjustment original error
1c	Matrix adjustment original error
1d	Original for the white reference compensation coefficient error
1e	Lab value searching error
1f	Lab value comparing error
63	Completed to obtain a test RAW

Completion

Press the stop key. The screen for selecting a maintenance item No. is displayed.

Item No.	Description
U415	**Adjusting the print position automatically** **Description** Automatically adjusts timings at the print engine. Adjustment for leading edge timing, center line and margin. **Purpose** Used to make respective auto adjustments for the print engine. **Method** 1. Load A3/ledger paper. 2. Press the start key. 3. Select [Execute]. 4. Press the start key. A test pattern is outputted 5. Set the output test pattern as the original. 6. Press the start key. Automatically performs adjustment from the top to bottom cassettes. 7. When normally completed, [OK] is displayed. If a problem occurs during auto adjustment, error code is displayed. **Error Codes**

Codes	Description
S001	Black band is not detected (main scanning direction far end)
S002	Black band is not detected (main scanning direction near end)
S003	Black band is not detected (auxiliary scanning direction leading edge)
S004	Black band is not detected (auxiliary scanning direction trailing edge)
S005	Auxiliary scanning direction skew error (1.5 mm or more)
S006	Main scanning direction skew error (1.5 mm or more)
S007	Original error (detection of reverse original paper)
S008	Original error (page mismatch)
SFFF	Scanner other error
C101	Adjustment value error (main scanning direction magnification)
C102	Adjustment value error (auxiliary scanning direction magnification)
C103	Adjustment value error (leading edge timing)
C104	Adjustment value error (center line)
C105	Adjustment value error (B margin)
C106	Adjustment value error (A margin)
C107	Adjustment value error (C margin)
C108	Adjustment value error (D margin)
CFFF	Controller other error

Completion
Press the stop key. The screen for selecting a maintenance item No. is displayed.

Item No.	Description
U425	**Setting the target**

Description
Enters the lab values that is indicated of the chart 1 (P/N: 7505000005) or chart 2 (P/N: 302FZ56990) used for adjustment.
Purpose
Performs data input in order to correct for differences in originals during automatic adjustment.

Method
1. Press the start key.
2. Select the chart to be used.

Display	Description
Chart1	Chart 1 (P/N: 7505000005)
Chart2	Chart 2 (P/N: 302FZ56990)

Method: [Chart1]
1. Press the start key.
2. Select the item to be set.

Display	Description
White	Setting the white patch for the original for adjustment
Black	Setting the black patch for the original for adjustment
Gray1	Setting the Gray1 patch for the original for adjustment
Gray2	Setting the Gray2 patch for the original for adjustment
Gray3	Setting the Gray3 patch for the original for adjustment
C	Setting the cyan patch for the original for adjustment
M	Setting the magenta patch for the original for adjustment
Y	Setting the yellow patch for the original for adjustment
R	Setting the red patch for the original for adjustment
G	Setting the green patch for the original for adjustment
B	Setting the blue patch for the original for adjustment
Adjust Original	Setting the main and auxiliary scanning directions

3. Select the item to be set.

Display	Description	Setting range
L	Setting the L value	0.0 to 100.0
a	Setting the a value	-200.0 to 200.0
b	Setting the b value	-200.0 to 200.0

4. Enters the value that is indicated on the face of the chart using the +/- keys or numeric keys.
5. Press the start key. The value is set.

Item No.	Description
U425	**Setting: [Adjust Original]** 1. Measure the distance from the leading edge to the top of black belt 1 of the original at A, B and C. Measurement procedure 1) Measure the distance from the leading edge to the top of black belt 1 of the original at A (30 mm from the left edge), B (148.5 mm from the left edge) and C (267 mm from the left edge), respectively. 2) Apply the following formula for the values obtained: ((A + B + C) / 3) 2. Enter the values solved using the cursor left/right keys or numeric keys in [Dist1]. 3. Press the start key. The value is set. 4. Measure the distance from the left edge to the right edge black belt 2 of the original at F. Measurement procedure 1) Measure the distance from the left edge to the right edge black belt 2 of the original at F (15 mm from the top edge of black belt 1). 5. Enter the values using the cursor left/right keys or numeric keys in [Dist2]. 6. Press the start key. The value is set. 7. Measure the distance from the top edge of black belt 1 to the bottom of black belt 3 of the original at D and E. 1) Measure the distance from the top edge of black belt 1 to the bottom of black belt 3 of the original at D (30 mm from the left edge) and E (267 mm from the left edge), respectively. 2) Apply the following formula for the values obtained: (D/2 + E/2) 8. Enter the measured value using the cursor left/right keys or numeric keys in [Dist3]. 9. Press the start key. The value is set. 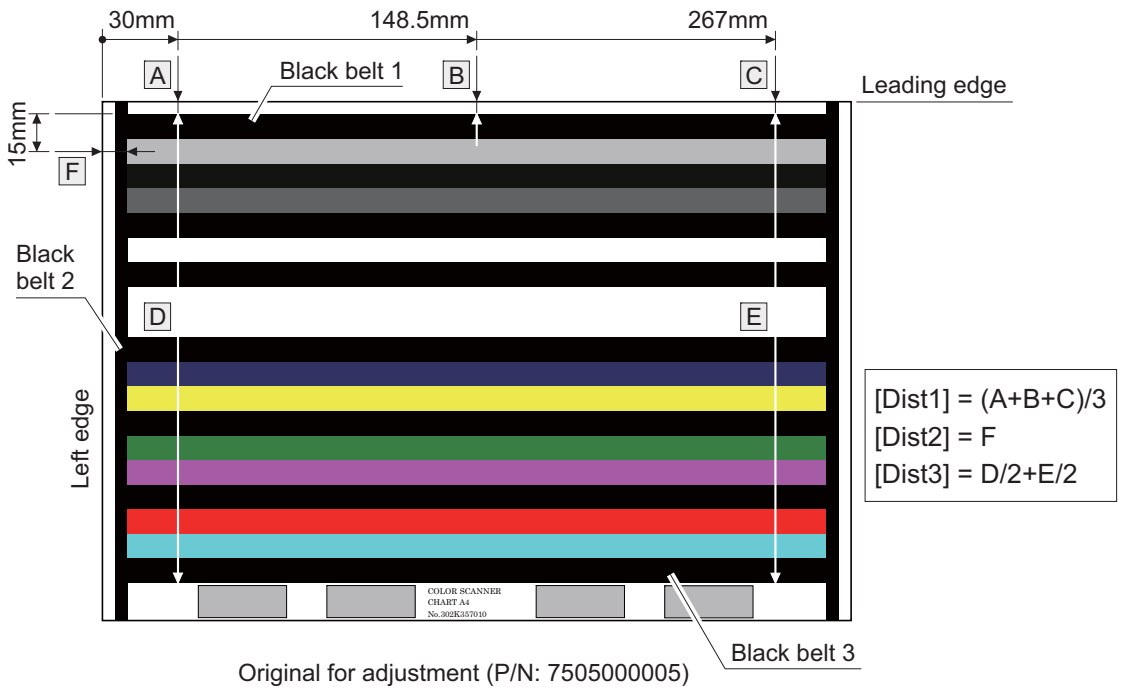 **Figure 1-3-21**

Item No.	Description
U425	**Method: [Chart2]** 1. Press the start key. 2. Select the item.

Display	Description
CCD	Entering the target values of the chart (P/N: 302FZ56990) used for adjustment
DP	Entering the measurement value of the chart (P/N: 302AC68243) used for adjustment

Method: [CCD]

1. Select the item to be set.

Display	Description
N875	Setting the N875 patch for the original for adjustment
N475	Setting the N475 patch for the original for adjustment
N125	Setting the N125 patch for the original for adjustment
C	Setting the cyan patch for the original for adjustment
M	Setting the magenta patch for the original for adjustment
Y	Setting the yellow patch for the original for adjustment
R	Setting the red patch for the original for adjustment
G	Setting the green patch for the original for adjustment
B	Setting the blue patch for the original for adjustment
Adjust Original	Setting the main and auxiliary scanning directions

2. Select the item to be set.

Display	Description	Setting range
L	Setting the L value	0.0 to 100.0
a	Setting the a value	-200.0 to 200.0
b	Setting the b value	-200.0 to 200.0

3. Enters the value that is indicated on the back of the chart using the +/- keys or numeric keys.
4. Press the start key. The value is set.

Item No.	Description
U425	**Setting: [Adjust Original]** 1. Measure the distance from the left edge to the black belt (a) of the original at A, B and C. Measurement procedure 1) Measure the distance from the edge to the black belt (a) of the original at A (30 mm from the leading edge), B (148.5 mm from the leading edge) and C (267 mm from the leading edge), respectively. 2) Apply the following formula for the values obtained: ((A + C) / 2 + B) / 2 2. Enter the values solved using the +/- keys or numeric keys in [Lead]. 3. Press the start key. The value is set. 4. Measure the distance from the leading edge to the black belt (b) of the original at D, E and F. Measurement procedure 1) Measure the distance from the edge to the black belt (b) of the original at D (35 mm from the left edge), E (110 mm from the left edge) and F (185 mm from the left edge), respectively. 2) Apply the following formula for the values obtained: ((D + F) / 2 + E) / 2 5. Enter the values solved using the +/- keys or numeric keys in [Main Scan]. 6. Press the start key. The value is set. 7. Measure the length (G) from the edge of the black belt (a) to edge of N475 of the original. 8. Enter the measured value using the +/- keys or numeric keys in [Sub Scan]. 9. Press the start key. The value is set. 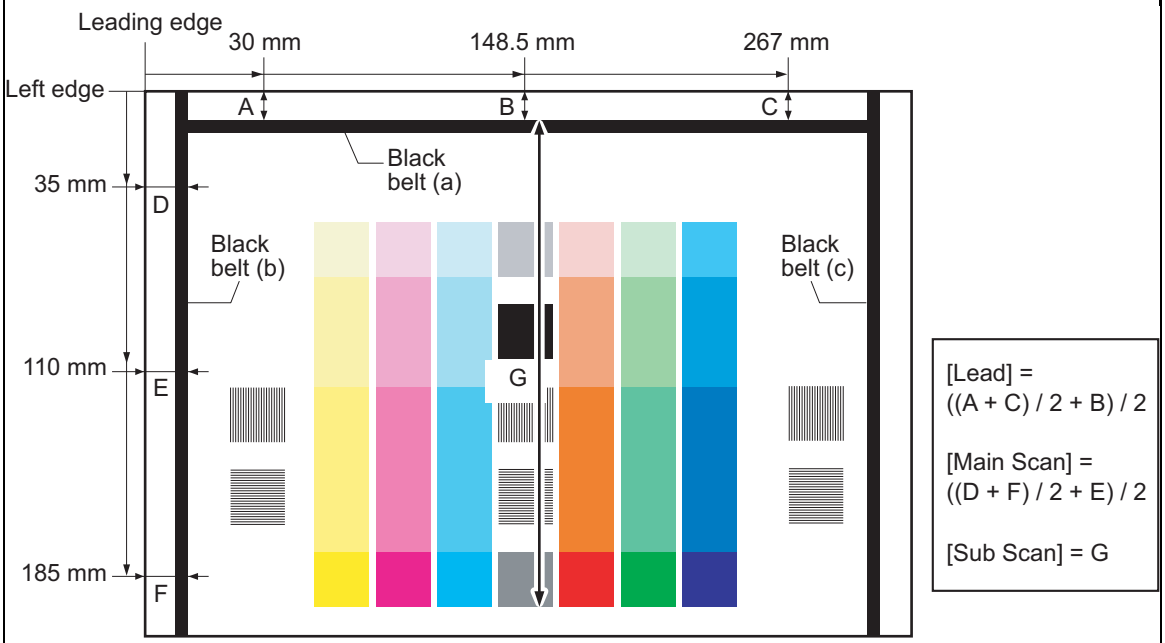 Original for adjustment (P/N: 302FZ56990) **Figure 1-3-22**

Item No.	Description
U425	**Setting: [DP]** 1. Measure the distance from the leading edge to the black belt (inside) of the original at A. 2. Enter the measured value using the +/- keys or numeric keys in [Lead]. 3. Measure the distance from the left edge to the black belt (inside) of the original at B. 4. Enter the measured value using the +/- keys or numeric keys in [Main Scan]. 5. Measure the distance from the black belt of leading edge (inside) to the black belt of trailing edge (inside) of the original at C. 6. Enter the measured value using the +/- keys or numeric keys in [Sub Scan]. 7. Press the start key. The value is set. 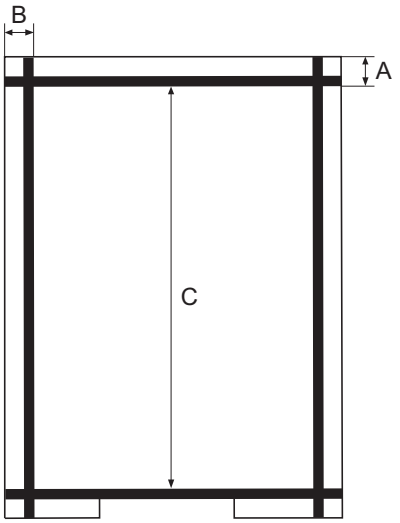 Original for adjustment (P/N: 302AC68243) **Figure 1-3-23** **Completion** Press the stop key. The screen for selecting a maintenance item No. is displayed.

Item No.	Description
U429	**Setting the offset for the color balance**

Description
Displays and changes the density for each color during copying in the various image quality modes.
Purpose
To change the balance for each color.

Method
1. Press the start key.
2. Select the image quality mode.

Display	Description
Text+Photo	Density of each color in the text & photo mode
Photo	Density of each color in the photo mode
Photo/Printout	Density of each color in the printed photo mode
Text	Density of each color in the text mode
Graphics/Map	Density of each color in the map mode
Copy/Printout	Density of each color in the printed document mode

Setting
1. Select the item to be set.
2. Change the setting value using the +/- keys or numeric keys.

Display	Description	Setting range	Initial setting
C	Value of the cyan setting	-5 to 5 (0 to 10*)	0 (5*)
M	Value of the magenta setting	-5 to 5 (0 to 10*)	0 (5*)
Y	Value of the yellow setting	-5 to 5 (0 to 10*)	0 (5*)
K	Value of the black setting	-5 to 5 (0 to 10*)	0 (5*)

*: When selecting [Copy/Printout]
Increasing the value darkens the density and decreasing it lightens the density.
3. Press the start key. The value is set.

Supplement
While this maintenance item is being executed, copying from an original is available in interrupt copying mode (which is activated by pressing the system menu key).

Completion
Press the stop key. The screen for selecting a maintenance item No. is displayed.

Item No.	Description
U464	**Setting the ID correction operation**

Description
Turns ID correction (calibration) on or off. Also, this determines the duration of calibration and the timing of calibration during printing. Also, this allows individual settings for calibration operation by enabling custom settings.

Purpose
To restrict calibration when poor image quality is generated. Also, this allows individual settings for calibration by enabling custom settings in setting the calibration cycle under the machine defaults depending on the user preferences.

Method

1. Press the start key.
2. Select the item to be set. The setting screen for the selected item is displayed.

Display	Description
Permission	Setting of operation permission
Time Interval	Setting of driving time
Bias Target	Setting of Bias target
Gamma Target	Setting of quantities of light target
Calib	Execution of calibration

Setting: [Permission]

1. Select the item to be set.
2. Change the setting value using the +/- keys or numeric keys.

Display	Description	Setting range	Initial setting
Calib	Setting the permission of calibration.	On/Off	On
Paper Int Calib	Setting the permission of calibration between paper.	On/Off	On

3. Press the start key. The value is set.

Setting: [Time Interval]

1. Select the item to be set.
2. Change the setting value using the cursor left/right keys or numeric keys.

Display	Description	Setting	Initial set-
Paper Int Calib	Setting the driving time of the calibration between paper.	0 to 100	20
Sleep Out	Setting the execution time of sleeve return calibration.	0 to 100	18
T/C Calib	Setting the execution time of T/C calibration.	0 to 100	11

3. Press the start key. The value is set.

Item No.	Description
U464	**Setting: [Bias Target/Gamma Target]** 1. Select the item to be set. 2. Change the setting value using the +/- keys or numeric keys.

Display	Description	Setting range	Initial setting
C	Setting of target (Cyan)	10 to 1000	760/300
M	Setting of target (Magenta)	10 to 1000	760/300
Y	Setting of target (Yellow)	10 to 1000	750/300
K	Setting of target (Black)	10 to 1000	820/400

3. Press the start key. The value is set.

Method: [Calib]

1. Select the item to be set
2. Press the start key. The operation starts.

Display	Description
Regist	Executes the calibration to correct registration.
Gamma	Executes the calibration to quantities of light.
Paper Int	Executes the calibration between paper.
Color Regist	Executes the calibration to color registration.

3. To stop operation, press the stop key.

Completion

Press the stop key. The screen for selecting a maintenance item No. is displayed.

Item No.	Description
U467	**Setting the color registration adjustment** **Description** Sets the color registration adjustment. **Purpose** If color variance is uneven due to a sensor failure, etc., turn this off and temporarily make a manual adjustment. **Method** 1. Press the start key. 2. Select the item to be set. **Display** / **Description** Permission — Setting of operation permission Timing — Setting of execution timing of resist correction **Setting** 1. Change the setting value using the +/- keys or numeric keys. 2. Press the start key. The value is set. **Completion** Press the stop key. The screen for selecting a maintenance item No. is displayed.
U468	**Checking the color registration data** **Description** Displays the color registration correction data and transfer belt speed correction data. **Purpose** To check the corresponding data. **Method** 1. Press the start key. 2. Select the item to be reference. The screen for the selected item is displayed. **Display** / **Description** Auto (C) — Display the auto color registration adjustment value for 1st color Auto (M) — Display the auto color registration adjustment value for 2nd color Auto (Y) — Display the auto color registration adjustment value for 3rd color Manual (C) — Display the manual color registration adjustment value for 1st color Manual (M) — Display the manual color registration adjustment value for 2nd color Manual (Y) — Display the manual color registration adjustment value for 3rd color Initialize — Execution of initialization

Item No.	Description
U468	**Displaying: [Auto]** 1. Select [Auto(1st)], [Auto(2nd)] or [Auto(3rd)]. The current value is displayed.

Display	Description
LSU Out Top	Image up-to-date timing
LSU Out Left	Image optical axis adjustment
Magnification(Whole)	Correction data of original size magnification in whole

Displaying: [Manual]

1. Select [Manua(1st)], [Manual(2nd)] or [Manual(3rd)].
   The current value is displayed.

Display	Description
LSU Out Top	Image up-to-date timing
LSU Out Left	Image optical axis adjustment
Magnification(Whole)	Correction data of original size magnification in whole
Magnification(Part1)	Correction data of original size magnification in a part 1
Magnification(Part2)	Correction data of original size magnification in a part 2
Magnification(Part3)	Correction data of original size magnification in a part 3
Magnification(Part4)	Correction data of original size magnification in a part 4
Magnification(Part5)	Correction data of original size magnification in a part 5
Magnification(Part6)	Correction data of original size magnification in a part 6
Magnification(Part7)	Correction data of original size magnification in a part 7

Method: [Initialize]

1. Select [Initialize].
2. Select [Execute] and then press the start key.
   * : Initialization is executed.

Display	Description
Execute	Execution of initialization

Completion

Press the stop key. The screen for selecting a maintenance item No. is displayed.

Item No.	Description
U469	**Adjusting the color registration** **Description** Performs the color registration correction and transfer belt speed correction. **Purpose** To perform when replacing the maintenance kit or laser scanner unit. **Method** * : Be sure to perform U464 Calib before performing this mode. 1. Press the start key. 2. Select the item.

Display	Description
Auto	Executing the auto color registration correction
Manual	Executing the manual color registration correction
Belt Initialize	Executing the transfer belt speed correction
Belt Check	Confirmation of transfer belt position

Method: [Auto]

1. Select [Print].
2. Press the start key. A chart for adjustment is outputted.
3. Set the output chart for adjustment as the original.
4. Select [Execute].
5. Press the start key. Color registration correction starts.
6. When normally completed, [OK] is displayed.
   If a problem occurs during auto adjustment, error code is displayed.

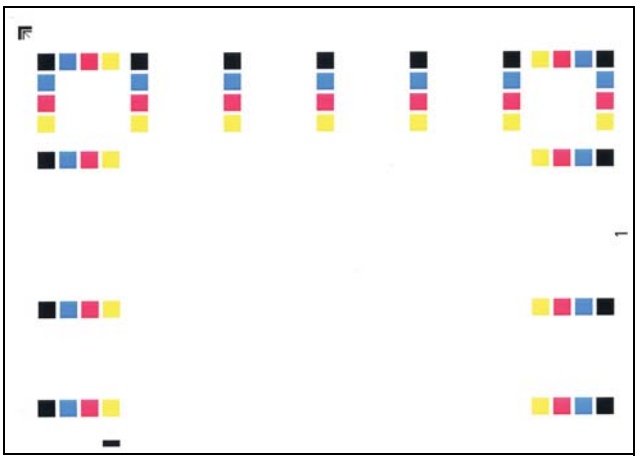

Chart for adjustment

Figure 1-3-24

Item No.	Description
U469	

Error codes

Codes	Description	Codes	Description
S001	Patch not detected	S004	Original inclination error
S002	Original deviation in the main scanning direction	S005	Original type error
		SFFF	Scanner other error
S003	Original deviation in the auxiliary scanning direction	CFFF	Controller other error

Method: [Manual]

1. Select [Print].
2. Press the start key. A chart for adjustment is outputted.
3. Select [Regist].
4. Read figures at MH-1 to 7/CH-1 to 7/YH-1 to 7 and MV-3/CV-3/YV-3 of the reference chart and enter the figure marked at the scale which the BK fine line is in line with the M/C/Y fine lines, using the # key or * key.

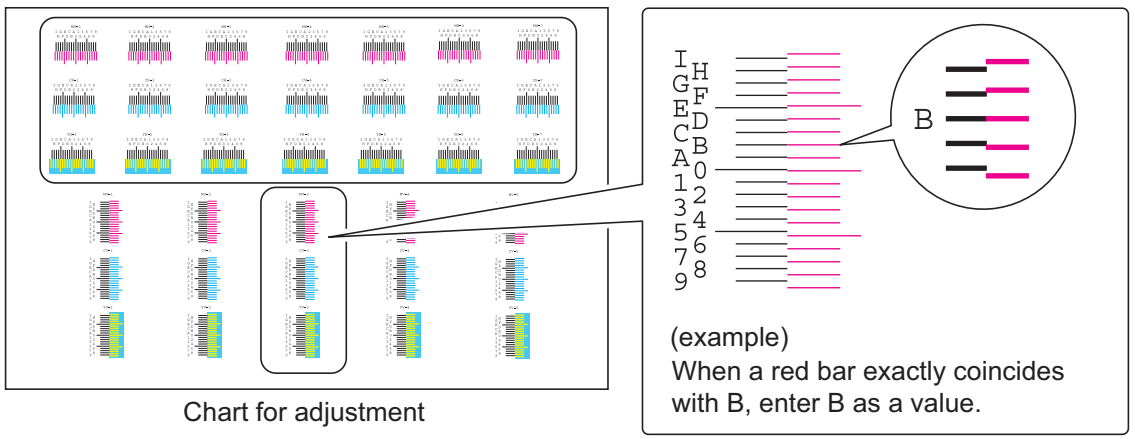

Figure 1-3-25

5. Press the start key. The value is set.
6. Press the start key after all values have been entered. Color registration correction starts.
7. Print a chart for adjustment.
8. Verify that each scale is within the range of 1to A.

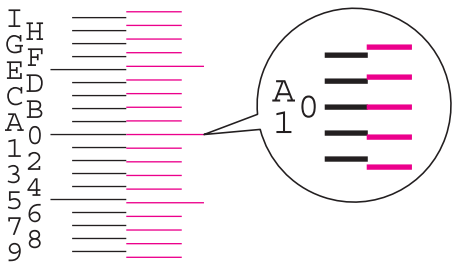

The scale must be corresponding within the range of "A" from "1".

Figure 1-3-26

Item No.	Description

Item No.	Description
U470	**Setting the JPEG compression ratio**

Description
Sets the compression ratio for JPEG images in each image quality mode.
Purpose
To change the setting in accordance with the image that the user is copying. For example, in order to soften the coarseness of the image when making copies at over 200% magnification, change the level of compression by raising the value. Lowering the value will increase the compression and thereby lower the image quality; Raising the value will increase image quality but lower the image processing speed.

Method
1. Press the start key.
2. Select the item to be set.

Display	Description
Copy	Compression ratio for copying
Send	Compression ratio for sending
System	Compression ratio for temporary storage in system

Setting: [Copy]
1. Select the item to be set.

Display	Description
Photo	Compression ratio in the photo mode
Text	Compression ratio in the text mode

2. Select the item to be set.
3. Change the setting value using the +/- keys or numeric keys.

Display	Description	Setting range	Initial setting
Y	Compression ratio of brightness	1 to 100	90/90
CbCr	Compression ratio of color differential	1 to 100	90/90

4. Press the start key. The value is set.

Item No.	Description
U470	

Setting: [Send]

1. Select the item to be set.

Display	Description
Photo	Compression ratio in the photo mode
Text	Compression ratio in the text mode
HC-PDF(BG)	Compression ratio of high compression PDF(BG)
HC-PDF(Char)	Compression ratio of high compression PDF(Char)

2. Select the item to be set.
3. Change the setting value using the +/- keys or numeric keys.

[Photo] or [Text]

Display	Description	Setting range	Initial setting
Y1 to Y5	Compression ratio of brightness	1 to 100	70/90/30/40/51
CbCr1 to CbCr5	Compression ratio of color differential	1 to 100	70/90/30/40/51

[HC-PDF]

Display	Description	Setting range	Initial setting
Y1 to Y3	Compression ratio of brightness	1 to 100	15/25/90
CbCr1 to CbCr3	Compression ratio of color differential	1 to 100	15/25/90

4. Press the start key. The value is set.

Setting: [System]

1. Select the item to be set.
2. Change the setting value using the +/- keys or numeric keys.

Display	Description	Setting range	Initial setting
Y	Compression ratio of brightness	1 to 100	90
CbCr	Compression ratio of color differential	1 to 100	90

3. Press the start key. The value is set.

Supplement

While this maintenance item is being executed, copying from an original is available in interrupt copying mode (which is activated by pressing the system menu key).

Completion

Press the stop key. The screen for selecting a maintenance item No. is displayed.

Item No.	Description
U473	**Adjusting laser power output** **Description** Adjusts the laser output power for each color. **Purpose** Enter the exposure density correction data after replacing the laser scanner unit. **Setting** 1. Press the start key. 2. Select the item to be set. 3. Change the setting value using the cursor left/right keys or numeric keys. **Display** / **Description** C — Setting the LSU laser power (Cyan) M — Setting the LSU laser power (Magenta) Y — Setting the LSU laser power (Yellow) K — Setting the LSU laser power (Black) 4. Press the start key. The value is set. **Completion** Press the stop key. The screen for selecting a maintenance item No. is displayed.

Item No.	Description
U485	**Setting the image processing mode**

Description
Sets the detection level for scanning printed matter outputted with the confidential document guard function. Also, sets the process PDF images are rotated.
Purpose
To change the detection level when the confidential document guard is not printed well for detection in scanning. Also, changes the process of how PDF images are rotated.

Method
1. Press the start key.
2. Select the item.

Display	Description
Mode	Setting of image-processing mode
Color table	Setting of a color table

Method: [Mode]
1. Select the item.

Display	Description
Conf. Doc. Detection	Confidential document guard detection level
PDF Rotation	Processing the rotation of PDF images

Setting: [Conf. Doc. Detection]
1. Change the setting value using +/- keys or numeric keys.

Display	Description	Setting range	Initial setting
Conf. Doc. Detection	Confidential document guard detection level	1 to 5	1

A smaller value raises the detection sensitivity but increases the possibility of false detection.
A larger value lowers the detection sensitivity but decreases the possibility of false detection.
2. Press the start key. The value is set.

Setting: [PDF Rotation]
1. Change the setting value using +/- keys or numeric keys.

Display	Description
0	Assigns the image rotation with the internal parameter
1	Assigns the image rotation with the actual image
2	Assigns the image rotation with the internal parameter (CTM rotation)

Initial setting: 0
2. Press the start key. The value is set.

Item No.	Description
U485	**Method:[Color table]** 1. Select the item. **Setting: [**Color Table 1 (Prn)/Color Table 2 (Prn)**]** 1. Select the item to setting. 2. Press the start key. The value is set. **Method:[Install]** 1. USB containing a color table file is attached. 2. Select [Execute]. 3. Press the start key. Installation of a color table is started. **Setting: [Uninstall]** 1. Select the item to setting. 2. Press the start key. Uninstallation of a color table is started. **Completion** Press the stop key. The screen for selecting a maintenance item No. is displayed.

Display	Description
Color Table 1 (Prn)	Printer color table (Default)
Color Table 2 (Prn)	Printer color table (Custom)
Install	Installation of a color table
Uninstall	Uninstallation of a color table

Display	Description
TYPE_FU	Color table name
TYPE_KO	Color table name
TYPE_KY	Color table name
TYPE_RH	Color table name
TYPE_TO	Color table name
TYPE_CA	Color table name

Display	Description
TYPE_FU	Color table name
TYPE_KO	Color table name
TYPE_KY	Color table name
TYPE_RH	Color table name
TYPE_TO	Color table name
TYPE_CA	Color table name

Item No.	Description
U486	**Setting color/black and white operation mode** **Description** When color and B/W documents are mixed, sets operation mode after a color document is detected. **Purpose** To ensure productivity when copying color and B/W documents in ACS mode, select Mode3. However, selecting Mode3 will increase the maintenance count for cyan, magenta, and yellow color developer units even when there is a B/W original after a color original. **Setting** 1. Press the start key. 2. Select the mode.

Display	Description
Mode1	A mode suited for the user with high black-and-white usage in which the occurrence of color printing during continuous printing is minimum. Color / monochrome mode is switched for every original.
Mode2	A mode suited for the user with high black-and-white usage in which the occurrence of color printing during continuous printing is maximum. Printing in color mode resumes up to 10 pages in a row even an interrupt is made to switch to black and white mode, until printing is diverted to black and white mode from color mode at the 11th page (color processing is terminated).
Mode3	A mode suited for the user with high black-and-white usage in which the occurrence of color printing during continuous printing is maximum. Mode suited for high color printing volume Once diverted to color mode, the black and white printings are executed in color processing mode.
Auto	Mode that allows to select from modes 1 through 3 depending on the usage. Mode is selected from three modes depending on the percentage of color and black and white printings in the total number of print pages during a predetermined period.

Initial setting: Mode2

3. Press the start key. The setting is set.

Completion

Press the stop key. The screen for selecting a maintenance item No. is displayed.

Item No.	Description
U486	

Details on the modes

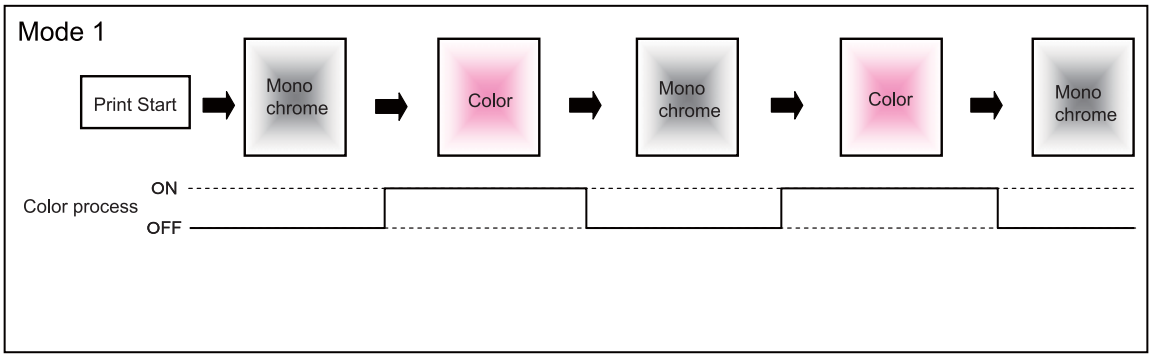

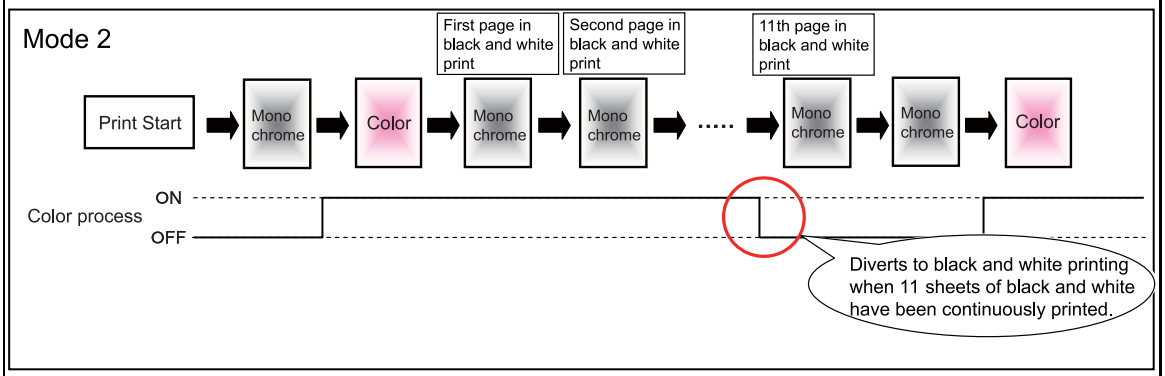

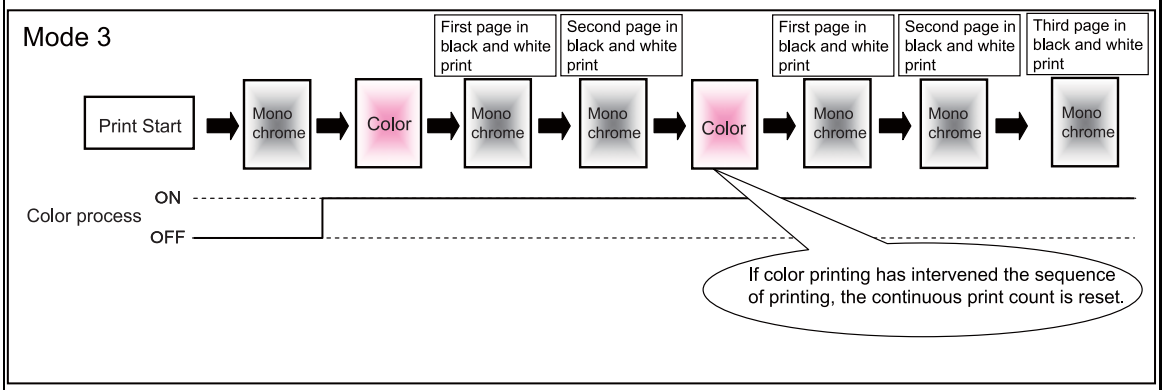

Figure 1-3-27

Item No.	Description
U600	**Initializing all data**

Description
Initializes software switches and all data in the backup data on the FAX control PWB, according to the destination and OEM.
Executes the check of the file system, when abnormality of the file system is detected, initializes the file system, communication past record and register setting contents.

Purpose
To initialize the FAX control PWB.

Method
1. Press the start key.
2. Select [Country Code] and enter a destination code using the numeric keys.
   Refer to the destination code list on following for the destination code.
   OEM code is no operation necessary.
3. Select [Execute].
4. Press the start key. Data initialization starts. To cancel data initialization, press the stop key.
5. After data initialization, ROM version are displayed.
   A ROM version displays three kinds, application, boot, and IPL.

Destination code list

Code	Destination	Code	Destination
000	Japan	253	CTR21 (European nations)
009	Australia		Italy
038	China		Germany
080	Hong Kong		Spain
084	Indonesia		U.K.
088	Israel		Netherlands
097	Korea		Sweden
108	Malaysia		France
126	New Zealand		Austria
136	Peru		Switzerland
137	Philippines		Belgium
152	Middle East		Denmark
156	Singapore		Finland
159	South Africa		Portugal
169	Thailand		Ireland
181	U.S.A.		Norway
242	South America	254	Taiwan
243	Saudi Arabia		

Item No.	Description
U601	**Initializing permanent data** **Description** Initializes software switches on the FAX control PWB according to the destination and OEM. **Purpose** To initialize the FAX control PWB without changing user registration data. **Method** 1. Press the start key. 2. Select [Country Code] and enter a destination code using the numeric keys. Refer to the destination code list on page 1-3-138 for the destination code. OEM code is no operation necessary. 3. Select [Execute]. 4. Press the start key. Data initialization starts. To cancel data initialization, press the back key. 5. After data initialization, ROM version are displayed. A ROM version displays three kinds, application, boot, and IPL.
U603	**Setting user data 1** **Description** Makes user settings to enable the use of the machine as a fax. **Purpose** To be executed as required. **Setting** 1. Press the start key. 2. Select [Line Type]. 3. Select the setting. Display: DTMF / 10PPS / 20PPS Description: DTMF / 10 PPS / 20 PPS * : Initial setting: DTMF 4. Press the start key. The setting is set. **Completion** Press the stop key. The screen for selecting a maintenance item No. is displayed.

<table>
<tr><th>Item No.</th><th>Description</th></tr>
<tr><td>U604</td><td>

Setting user data 2

Description
Makes user settings to enable the use of the machine as a fax.
Purpose
Use this if the user wishes to adjust the number of rings that occur before the unit switches into fax receiving mode when fax/telephone auto-select is enabled.

Method
1. Press the start key.
2. Select [Rings(F/T) #].
3. Change the setting using the +/- keys or numeric keys.

<table>
<tr><th>Display</th><th>Description</th><th>Setting range</th></tr>
<tr><td>Rings(F/T) #</td><td>Number of fax/telephone rings</td><td>0 to 15</td></tr>
</table>

* : If you set this to 0, the unit will start fax reception without any ringing.
4. Press the start key. The value is set.

Completion
Press the stop key. The screen for selecting a maintenance item No. is displayed.

</td></tr>
<tr><td>U605</td><td>

Clearing data

Description
Initializes data related to the fax transmission such as transmission history.
Purpose
To clear the transmission history.

Method
1. Press the start key.
2. Select [CLEAR COM.REC.].
3. Press the start key. Initialization processing starts.
When processing is finished, [Completed] is displayed.

Completion
Press the stop key. The screen for selecting a maintenance item No. is displayed.

</td></tr>
</table>

Item No.	Description
U610	**Setting system 1**

Description
Makes settings for fax reception regarding the sizes of the fax paper and received images and automatic printing of the protocol list.

Method
1. Press the start key.
2. Select the item to be set.

Display	Description
Cut Line(100%)	Sets the number of lines to be ignored when receiving a fax at 100% magnification.
Cut Line(Auto)	Sets the number of lines to be ignored when receiving a fax in the auto reduction mode.
Cut Line(A4)	Sets the number of lines to be ignored when receiving a fax (A4R/LetterR) in the auto reduction mode.

Setting:[Cut Line(100%)]
Sets the maximum number of lines to be ignored if the received data volume exceeds the recording capacity when recording the data at 100% magnification. If the number of excess lines is below the setting, those lines are ignored. If over the setting, they are recorded on the next page.
1. Change the setting using the +/- keys or numeric keys.

Description	Setting range	Initial setting
Number of lines to be ignored when receiving at 100%	0 to 22	3

* : Increase the setting if a blank second page is output, and decrease it if the received image does not include the entire transmitted data.
2. Press the start key. The value is set.

Setting:[Cut Line(Auto)]
Sets the maximum number of lines to be ignored if the received data volume exceeds the recording capacity when the data is recorded in the auto reduction mode. If the number of excess lines is below the setting, those lines are ignored. If over the setting, the entire data on a page is further reduced so that it can be recorded on the same page.
1. Change the setting using the +/- keys or numeric keys.

Description	Setting range	Initial setting
Number of lines to be ignored when receiving in the auto reduction mode	0 to 22	0

* : Increase the setting if a page received in the reduction mode is over-reduced and too much trailing edge margin is left. Decrease it if the received image does not include all transmitted data.
2. Press the start key. The value is set.

Item No.	Description
U610	**Setting:[Cut Line(A4)]** Sets the maximum number of lines to be ignored if the received data volume exceeds the recording capacity when the data is recorded in the auto reduction mode onto A4R or LetterR paper under the conditions below. If the number of excess lines is below the setting, those lines are ignored. If over the setting, the entire data on a page is further reduced so that it can be recorded on the same page. 1. Change the setting using the +/- keys or numeric keys. **Description** / **Setting range** / **Initial setting** Number of lines to be ignored when receiving a fax (A4R, letter) in the auto reduction mode / 0 to 22 / 0 * : Increase the setting if a page received in the reduction mode is over-reduced and too much trailing edge margin is left. Decrease it if the received image does not include all transmitted data. 2. Press the start key. The value is set. **Completion** Press the stop key. The screen for selecting a maintenance item No. is displayed.

Item No.	Description
U611	**Setting system 2** **Description** Sets the number of adjustment lines for automatic reduction. **Method** 1. Press the start key. 2. Select the item to be set. **Display** / **Description** Adj Lines — Sets the number of adjustment lines for automatic reduction. Adj Lines(A4) — Sets the number of adjustment lines for automatic reduction when A4 paper is set. Adj Lines(LT) — Sets the number of adjustment lines for automatic reduction when letter size paper is set. **Setting:[Adj Lines]** Sets the number of adjustment lines for automatic reduction. 1. Change the setting using the cursor left/right keys or numeric keys. **Description** / **Setting range** / **Initial setting** Number of adjustment lines for automatic reduction / 0 to 22 / 7 2. Press the start key. The value is set. **Setting:[Adj Lines(A4)]** Sets the number of adjustment lines for automatic reduction when A4 paper is set. 1. Change the setting using the cursor left/right keys or numeric keys. **Description** / **Setting range** / **Initial setting** Number of adjustment lines for automatic reduction when A4 paper is set / 0 to 22 / 22 2. Press the start key. The value is set. **Setting:[Adj Lines(LT)]** Sets the number of adjustment lines for automatic reduction when letter size paper is set. 1. Change the setting using the cursor left/right keys or numeric keys. **Description** / **Setting range** / **Initial setting** Number of adjustment lines for automatic reduction when letter size paper is set / 0 to 26 / 26 2. Press the start key. The value is set. **Completion** Press the stop key. The screen for selecting a maintenance item No. is displayed.

Item No.	Description
U612	**Setting system 3** **Description** Makes settings for fax transmission regarding operation and automatic printing of the protocol list. **Method** 1. Press the start key. 2. Select the item to be set. **Setting:[Auto Reduct]** Sets whether to receive a long document by automatically reducing it in the auxiliary direction or at 100% magnification. 1. Select the item to be set. **Setting:[Protocol List]** Sets if the protocol list is automatically printed out. 1. Select the item to be set. **Completion** Press the stop key. The screen for selecting a maintenance item No. is displayed.

Display	Description
Auto Reduct	Selects if auto reduction in the auxiliary direction is to be performed.
Protocol List	Sets the automatic printing of the protocol list.

Display	Description
On	Auto reduction is performed if the received document is longer than the fax paper.
Off	Auto reduction is not performed.

* : Initial setting: On

2. Press the start key. The setting is set.

Display	Description
Off	The protocol list is not printed out automatically.
Err	The protocol list is automatically printed out after communication only if a communication error occurs.
On	The protocol list is automatically printed out after communication.

* : Initial setting: Off

2. Press the start key. The setting is set.

<table>
<tr><th>Item No.</th><th>Description</th></tr>
<tr><td>U615</td><td>

Setting system 6

Description
Makes settings for fax reception regarding the sizes of the fax paper and received images.
Purpose
To set the maximum recording width and processing method when 11" width fax paper is loaded on an inch specification machine.

Setting
1. Press the start key.
2. Select [RX Width For 11"].
3. Select the item to be set.

<table>
<tr><th>Display</th><th>Description</th></tr>
<tr><td>Ledger</td><td>Communicates to the destination unit 11" width as A3 width and records at 100% magnifications.</td></tr>
<tr><td>B4</td><td>Communicates to the destination unit 11" width as B4 width.</td></tr>
</table>

* : Initial setting: Ledger

4. Press the start key. The setting is set.

Completion
Press the stop key. The screen for selecting a maintenance item No. is displayed.

</td></tr>
<tr><td>U620</td><td>

Setting the remote switching mode

Description
Sets the signal detection method for remote switching. Be sure to change the setting according to the type of telephone connected to the machine.

Setting
1. Press the start key.
2. Select [Remort Mode].
3. Select the mode.

<table>
<tr><th>Display</th><th>Description</th></tr>
<tr><td>One</td><td>One-shot detection</td></tr>
<tr><td>Cont</td><td>Continuous detection</td></tr>
</table>

* : Initial setting: One

4. Press the start key. The setting is set.

Completion
Press the stop key. The screen for selecting a maintenance item No. is displayed.

</td></tr>
</table>

Item No.	Description
U625	**Setting the transmission system 1**

Description
Makes settings for the auto redialing interval and the number of times of auto redialing.
Purpose
Change the setting to prevent the following problems: fax transmission is not possible due to too short redial interval, or fax transmission takes too much time to complete due to too long redial interval.

Method
1. Press the start key.
2. Select the item to be set.

Display	Description
Interval	Setting the auto redialing interval
Times	Setting the number of times of auto redialing

Setting:[Interval]
1. Change the setting using the +/- keys or numeric keys.

Description	Setting range	Initial setting
Redialing interval	1 to 9 (min.)	3 (120 V)/2 (220-240 V)

2. Press the start key. The value is set.

Setting:[Times]
1. Change the setting using the +/- keys or numeric keys.

Description	Setting range	Initial setting
Number of redialing	0 to 15	2 (120 V)/3 (220-240 V)

2. Press the start key. The value is set.

Completion
Press the stop key. The screen for selecting a maintenance item No. is displayed.

Item No.	Description
U630	**Setting communication control 1** **Description** Makes settings for fax transmission regarding the communication. **Method** 1. Press the start key. 2. Select the item to be set. **Display** / **Description** TX Speed — Sets the communication starting speed. RX Speed — Sets the reception speed. TX Echo — Sets the waiting period to prevent echo problems at the sender. RX Echo — Sets the waiting period to prevent echo problems at the receiver. **Setting:[TX Speed]** Sets the initial communication speed when starting transmission. When the destination unit has V.34 capability, V.34 is selected for transmission, regardless of this setting. 1. Select the setting. **Display** / **Description** 14400bps/V17 — V.17, 14400 bps 9600bps/V29 — V.17, 9600 bps 4800bps/V27ter — V.27ter, 4800 bps 2400bps/V27ter — V.27ter, 2400 bps * : Initial setting: 14400bps/V17 2. Press the start key. The setting is set. **Setting:[RX Speed]** Sets the reception speed that the sender is informed of using the DIS or NSF signal. When the destination unit has V.34 capability, V.34 is selected, regardless of the setting. 1. Select the setting. **Display** / **Description** 14400bps — V.17, V.33, V.29, V.27ter 9600bps — V.29, V.27ter 4800bps — V.27ter 2400bps — V.27ter (fallback only) * : Initial setting: 14400bps 2. Press the start key. The setting is set.

Item No.	Description
U630	**Setting:[TX Echo]** Sets the period before a DCS signal is sent after a DIS signal is received. Used when problems occur due to echoes at the sender. 1. Select the setting. * : Initial setting: 300 2. Press the start key. The setting is set. **Setting:[RX Echo]** Sets the period before an NSF, CSI or DIS signal is sent after a CED signal is received. Used when problems occur due to echoes at the receiver. 1. Select the setting. * : Initial setting: 75 2. Press the start key. The setting is set. **Completion** Press the stop key. The screen for selecting a maintenance item No. is displayed.

Display	Description
500	Sends a DCS 500 ms after receiving a DIS.
300	Sends a DCS 300 ms after receiving a DIS.

Display	Description
500	Sends an NSF, CSI or DIS 500 ms after receiving a CED.
75	Sends an NSF, CSI or DIS 75 ms after receiving a CED.

Item No.	Description
U631	**Setting communication control 2** **Description** Makes settings regarding fax transmission. **Method** 1. Press the start key. 2. Select the item to be set. **Setting:[ECM TX]** To be set to Off when reduction of transmission costs is of higher priority than image quality. This should not be set to Off when connecting to the IP (Internet Protocol) telephone line. 1. Select the setting. **Setting:[ECM RX]** To be set to Off when reduction of transmission costs is of higher priority than image quality. This should not be set to Off when connecting to the IP (Internet Protocol) telephone line. 1. Select the setting. **Setting:[CED Freq]** Sets the frequency of the CED signal. Used as one of the measures to improve transmission performance for international communications. 1. Select the setting. **Completion** Press the stop key. The screen for selecting a maintenance item No. is displayed.

Display	Description
ECM TX	Sets ECM transmission.
ECM RX	Sets ECM reception.
CED Freq	Sets the frequency of the CED signal.

Display	Description
On	ECM transmission is enabled.
Off	ECM transmission is disabled.

* : Initial setting: On

2. Press the start key. The setting is set.

Display	Description
On	ECM reception is enabled.
Off	ECM reception is disabled.

* : Initial setting: On

2. Press the start key. The setting is set.

Display	Description
2100	2100 Hz
1100	1100 Hz

* : Initial setting: 2100

2. Press the start key. The setting is set.

Item No.	Description
U632	**Setting communication control 3** **Description** Makes settings for fax transmission regarding the communication. **Method** 1. Press the start key. 2. Select the item to be set. **Display** / **Description** DIS 4Byte — Sets the DIS signal to 4 bytes. Num OF CNG(F/T) — Sets the CNG detection times in the fax/telephone auto select mode. **Setting:[DIS 4Byte]** Sets if bit 33 and later bits of the DIS/DTC signal are sent. 1. Select the setting. **Display** / **Description** On — Bit 33 and later bits of the DIS/DTC signal are not sent. Off — Bit 33 and later bits of the DIS/DTC signal are sent. * : Initial setting: Off 2. Press the start key. The setting is set. **Setting:[Num OF CNG(F/T)]** Sets the CNG detection times in the fax/telephone auto select mode. 1. Select the setting. **Display** / **Description** 1Time — Detects CNG once. 2Time — Detects CNG twice. * : Initial setting: 2Time 2. Press the start key. The setting is set. **Completion** Press the stop key. The screen for selecting a maintenance item No. is displayed.

Item No.	Description
U633	**Setting communication control 4** **Description** Makes settings for fax transmission regarding the communication. **Purpose** To reduce transmission errors when a low quality line is used. **Method** 1. Press the start key. 2. Select the item to be set. **Setting:[V.34]** Sets whether V.34 communication is enabled/disabled for transmission and reception. 1. Select the setting. * : Initial setting: On 2. Press the start key. The setting is set. **Setting:[V.34-3429Hz]** Sets if the V.34 symbol speed 3429 Hz is used. 1. Select the setting. * : Initial setting: On 2. Press the start key. The setting is set.

Display	Description
V.34	Enables or disables V.34 communication.
V.34-3429Hz	Sets the V.34 symbol speed (3429 Hz).
DIS 2Res	Sets the number of times of DIS signal reception.
RTN Check	Sets the reference for RTN signal output.

Display	Description
On	V.34 communication is enabled for both transmission and reception.
TX	V.34 communication is enabled for transmission only.
RX	V.34 communication is enabled for reception only.
Off	V.34 communication is disabled for both transmission and reception.

Display	Description
On	V.34 symbol speed 3429 Hz is used.
Off	V.34 symbol speed 3429 Hz is not used.

<table>
<tr><th>Item No.</th><th>Description</th></tr>
<tr><td>U633</td><td>

Setting:[DIS 2Res]

Sets the number of times to receive the DIS signal to once or twice. Used as one of the correction measures for transmission errors and other problems.

1. Select the setting.

Display	Description
Once	Responds to the first signal.
Twice	Responds to the second signal.

* : Initial setting: Once

2. Press the start key. The setting is set.

Setting:[RTN Check]

Sets the error line rate as the reference for RTN signal output. If transmission errors occur frequently due to the quality of the line, they can be reduced by lowering this setting.

1. Select the setting.

Display	Description
5%	Error line rate of 5%
10%	Error line rate of 10%
15%	Error line rate of 15%
20%	Error line rate of 20%

* : Initial setting: 15%

2. Press the start key. The setting is set.

Completion

Press the stop key. The screen for selecting a maintenance item No. is displayed.

</td></tr>
<tr><td>U634</td><td>

Setting communication control 5

Description

Sets the maximum number of error bytes judged acceptable when receiving a TCF signal. Used as a measure to ease transmission conditions if transmission errors occur.

Setting

1. Press the start key.
2. Select [TCF Check].
3. Change the setting using the +/- keys or numeric keys.

Description	Setting range	Initial setting
Number of allowed error bytes when detecting TCF	0 to 255	0

4. Press the start key. The value is set.

Completion

Press the stop key. The screen for selecting a maintenance item No. is displayed.

</td></tr>
</table>

Item No.	Description
U640	**Setting communication time 1** **Description** Sets the detection time when one-shot detection is selected for remote switching. (This setting item will be displayed, but the setting made is ineffective.) Sets the detection time when continuous detection is selected for remote switching. (This setting item will be displayed, but the setting made is ineffective.) **Method** 1. Press the start key. 2. Select the item to be set. **Setting:[Time (One)]** 1. Change the setting using the +/- keys or numeric keys. **Setting:[Time (Cont)]** 1. Change the setting using the +/- keys or numeric keys. **Completion** Press the stop key. The screen for selecting a maintenance item No. is displayed.

Display	Description
Time (One)	Sets the one-shot detection time for remote switching.
Time (Cont)	Sets the continuous detection time for remote switching.

Description	Setting range	Initial setting
One-shot detection time for remote switching	0 to 255	7

2. Press the start key. The value is set.

Description	Setting range	Initial setting
Continuous detection time for remote switching	0 to 255	80

2. Press the start key. The value is set.

Item No.	Description
U641	**Setting communication time 2**

Description
Sets the time-out time for fax transmission.
Purpose
To improve transmission performance for international communications mainly.

Method
1. Press the start key.
2. Select the item to be set.

Display	Description
T0 Time Out	Sets the T0 time-out time.
T1 Time Out	Sets the T1 time-out time.
T2 Time Out	Sets the T2 time-out time.
Ta Time Out	Sets the Ta time-out time.
Tb1 Time Out	Sets the Tb1 time-out time.
Tb2 Time Out	Sets the Tb2 time-out time.
Tc Time Out	Sets the Tc time-out time.
Td Time Out	Sets the Td time-out time.

Setting:[T0 Time Out]
Sets the time before detecting a CED or DIS signal after a dialing signal is sent.
Depending on the quality of the exchange, or when the auto select function is selected at the destination unit, a line can be disconnected. Change the setting to prevent this problem.
1. Change the setting using the +/- keys or numeric keys.

Description	Setting range	Initial setting
T0 time-out time	30 to 90 s	56

2. Press the start key. The value is set.

Setting:[T1 Time Out]
Sets the time before receiving the correct signal after call reception. No change is necessary for this maintenance item.
1. Change the setting using the +/- keys or numeric keys.

Description	Setting range	Initial setting
T1 time-out time	30 to 90 s	36

2. Press the start key. The value is set.

Item No.	Description
U641	**Setting:[T2 Time Out]** The T2 time-out time decides the following. From CFR signal output to image data reception From image data reception to the next signal reception In ECM, from RNR signal detection to the next signal reception 1. Change the setting using the +/- keys or numeric keys. 2. Press the start key. The value is set. **Setting:[Ta Time Out]** In the fax/telephone auto select mode, sets the time to continue ringing an operator through the connected telephone after receiving a call as a fax machine (see figure 1-3-28). A fax signal is received within the Ta set time, or the fax mode is selected automatically when the time elapses. In fax/telephone auto select mode, change the setting when fax reception is unsuccessful or a telephone fails to receive a call. 1. Change the setting using the +/- keys or numeric keys. 2. Press the start key. The value is set. **Figure 1-3-28 Ta/Tb1/Tb2 time-out time** **Setting:[Tb1 Time Out]** In the fax/telephone auto select mode, sets the time to start sending the ring back tone after receiving a call as a fax machine (see figure 1-3-28). In fax/telephone auto select mode, change the setting when fax reception is unsuccessful or a telephone fails to receive a call. 1. Change the setting using the +/- keys or numeric keys. 2. Press the start key. The value is set.

Description	Setting range	Initial setting	Change in value per step
T2 time-out time	1 to 255	69	100 ms

Description	Setting range	Initial setting
Ta time-out time	1 to 255	30

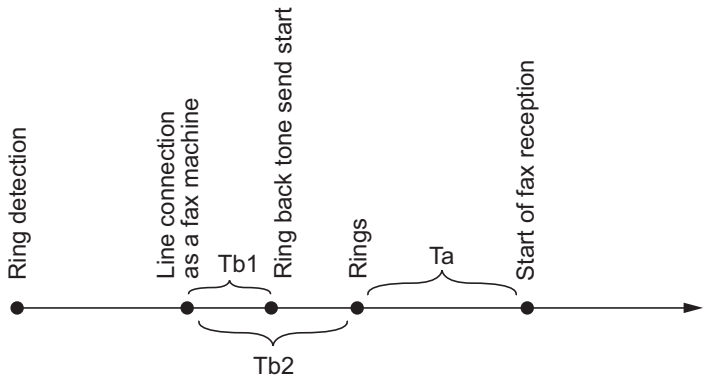

Description	Setting range	Initial setting	Change in value per step
Tb1 time-out time	1 to 255	20	100 ms

Item No.	Description
U641	**Setting:[Tb2 Time Out]** In the fax/telephone auto select mode, sets the time to start ringing an operator through the connected telephone after receiving a call as a fax machine (see figure 1-3-28). In the fax/telephone auto select mode, change the setting when fax reception is unsuccessful or a telephone fails to receive a call. 1. Change the setting using the +/- keys or numeric keys. 2. Press the start key. The value is set. **Setting:[Tc Time Out]** In the TAD mode, set the time to check if there are any triggers for shifting to fax reception after a connected telephone receives a call. Only the telephone function is available if shifting is not made within the set Tc time. In the TAD mode, change the setting when fax reception is unsuccessful or a telephone fails to receive a call. 1. Change the setting using the +/- keys or numeric keys. 2. Press the start key. The value is set. **Setting:[Td Time Out]** Sets the length of the time required to determine silent status (fax), one of the triggers for Tc time check. In the TAD mode, change the setting when fax reception is unsuccessful or a telephone fails to receive a call. Be sure not to set it too short; otherwise, the mode may be shifted to fax while the unit is being used as a telephone. 1. Change the setting using the +/- keys or numeric keys. 2. Press the start key. The value is set. **Completion** Press the stop key. The screen for selecting a maintenance item No. is displayed.

Description	Setting range	Initial setting	Change in value per step
Tb2 time-out time	1 to 255	80	100 ms

Description	Setting range	Initial setting
Tc time-out time	1 to 255	60

Description	Setting range	Initial setting
Td time-out time	1 to 255	9 (120 V)/6 (220-240 V)

Item No.	Description
U650	**Setting modem 1** **Description** Sets the G3 cable equalizer. Sets the modem detection level. **Purpose** Perform the following adjustment to make the equalizer compatible with the line characteristics. To improve the transmission performance when a low quality line is used. **Method** 1. Press the start key. 2. Select the item to be set. **Setting:[Reg G3 TX Eqr]** 1. Select [0dB], [4dB], [8dB] or [12dB]. * : Initial setting: 0dB 2. Press the start key. The setting is set. **Setting:[Reg G3 RX Eqr]** 1. Select [0dB], [4dB], [8dB] or [12dB]. * : Initial setting: 0dB 2. Press the start key. The setting is set. **Setting:[RX Mdm Level]** 1. Select [-33dBm], [-38dBm], [-43dBm] or [-48dBm] using the cursor up/down keys. * : Initial setting: -43dBm 2. Press the start key. The setting is set. **Completion** Press the stop key. The screen for selecting a maintenance item No. is displayed.

Display	Description
Reg G3 TX Eqr	Sets the G3 transmission cable equalizer.
Reg G3 RX Eqr	Sets the G3 reception cable equalizer.
RX Mdm Level	Sets the modem detection level.

Item No.	Description
U651	**Setting modem 2** **Description** Sets the modem output level. Sets the DTMF output level of a push-button dial telephone. **Purpose** Used if problems occur when sending a signal with a push-button dial telephone. **Setting** 1. Press the start key. 2. Select the item to be set. 3. Change the setting using the +/- keys or numeric keys. 4. Press the start key. The setting is set. **Completion** Press the stop key. The screen for selecting a maintenance item No. is displayed.

Display	Description	Setting range
Sgl LV Modem	Modem output level	-15 to 0
DTMF LEV(CENT)	DTMF output level (main value)	-15 to 0
DTMF LEV(DIFF)	DTMF output level (level difference)	0 to 5.5

Item No.	Description
U660	**Setting the NCU** **Description** Makes setting regarding the network control unit (NCU). **Purpose** To be executed as required. **Method** 1. Press the start key. 2. Select the item to be set. **Display** / **Description** Exchange — Sets the connection to PBX/PSTN. Dial Tone — Sets PSTN dial tone detection. Busy Tone — Sets busy tone detection. PBX Setting — Setting for a PBX. DC Loop — Sets the loop current detection before dialing. **Setting:[Exchange]** Selects if a fax is to be connected to either a PBX or public switched telephone network. 1. Select the setting. **Display** / **Description** PSTN — Connected to the public switched telephone network. PBX — Connected to a PBX. * : Initial setting: PSTN 2. Press the start key. The setting is set. **Setting:[Dial Tone]** Selects if the dial tone is detected to check the telephone is off the hook when a fax is connected to a public switched telephone network. 1. Select the setting. **Display** / **Description** On — Detects the dial tone. Off — Does not detect the dial tone. * : Initial setting: On 2. Press the start key. The setting is set.

Item No.	Description
U660	**Setting:[Busy Tone]** When a fax signal is sent, sets whether the line is disconnected immediately after a busy tone is detected, or the busy tone is not detected and the line remains connected until T0 time-out time. Fax transmission may fail due to incorrect busy tone detection. When set to 2, this problem may be prevented. However, the line is not disconnected within the T0 time-out time even if the destination line is busy. 1. Select the setting. **Display** / **Description** On / Detects busy tone. Off / Does not detect busy tone. * : Initial setting: On 2. Press the start key. The setting is set. **Setting:[PBX Setting]** Selects the mode to connect an outside call when connected to a PBX. According to the type of the PBX connected, select the mode to connect an outside call. 1. Select the setting. **Display** / **Description** Flash / Flashing mode Loop / Code number mode * : Initial setting: Loop 2. Press the start key. The setting is set. **Setting:[DC Loop]** Sets if the loop current detection is performed before dialing. 1. Select the setting. **Display** / **Description** On / Performs loop current detection before dialing. Off / Does not perform loop current detection before dialing. * : Initial setting: On 2. Press the start key. The setting is set. **Completion** Press the stop key. The screen for selecting a maintenance item No. is displayed.

Item No.	Description
U670	**Outputting lists** **Description** Outputs a list of data regarding fax transmissions. Printing a list is disabled either when a job is remaining in the buffer or when [Pause All Print Jobs] is pressed to halt printing. **Purpose** To check conditions of use, settings and transmission procedures of the fax. **Method** 1. Press the start key. 2. Select the item to be output. 3. Press the start key. The selected list is output. **Completion** Press the stop key. The screen for selecting a maintenance item No. is displayed.

Display	Description
Setting List	Outputs a list of software switches, self telephone number, confidential boxes, ROM versions and other information.
Action List	Outputs a list of error history, transmission line details and other information.
Self Sts Report	Outputs a list of settings in maintenance mode (own-status report) regarding fax transmission only.
Protocol List	Outputs a list of transmission procedures.
Error List	Outputs a list of error.
Backup Report	Outputs a report of FAX/i-FAX communication history information and FAX reservation document information.
Addr Book(No.)	Outputs address book in order IDs were added
Addr Book(Name)	Outputs address book in order of names
One-touch List	Outputs a list of one-touch.
Group List	Outputs a list of group.

Item No.	Description
U671	**Clear FAX back up data** **Description** The communication history information of fax / Internet fax and the fax transmitting reservation information which are backed up on the FAX control circuit board are cleared. Moreover, memory DIMM is initialized. **Purpose** It carries out for the prevention from an information leak of backup data. **Method** 1. Press the start key. 2. Select the item. Display: Reservation Clear — Description: Clears the communication reservation information. Display: Recovery FAX DIMM — Description: Another DIMM is made usable. Display: FAX DIMM Clear — Description: All the data in DIMM is cleared. 3. Press the start key. Backup data is cleared. 4. When "Recovery FAX DIMM" or "FAX DIMM Clear" is selected, turn the main power switch off and on. Allow more than 5 seconds between Off and On. **Completion** Press the stop key. The screen for selecting a maintenance item No. is displayed.

Item No.	Description
U695	**FAX function customize** **Description** Sets fax batch transmission ON/OFF. Also changes the print size priority at the time of small size reception. **Purpose** To be executed as required. **Setting** 1. Select the item to be set. **Setting: [FAX Bulk TX]** 1. Select the item to be set. **Setting: [A5 Pt Priority Chg]** 1. Select the item to be set. **Completion** Press the stop key. The screen for selecting a maintenance item No. is displayed.

Display	Description
FAX Bulk TX	fax batch transmission On/Off
A5 Pt Priority Chg	Change of print size priority at the time of small size reception

Display	Description
On	Fax batch transmission is enabled.
Off	Fax batch transmission is disabled.

* : Initial setting: On

2. Press the start key. The setting is set.

Display	Description
On	At the time of A5 size reception: A5→B5→A4→B4→A3
Off	At the time of A5 size reception: A5→A4→B5→A3→B4

* : Initial setting: Off

2. Press the start key. The setting is set.

Item No.	Description
U698	**Setting the port addressed in maintenance mode** **Description** Configures the port that is addressed in maintenance mode. **Purpose** To configure the port that is addressed in maintenance mode when the optional dual FAX is installed. It is not required to assign the same settings to both ports. It should be used to assign different settings to each port. **Remarks** This maintenance item is shown only when the optional dual FAX has been installed. **Setting** 1. Press the start key. 2. Press [PORT SELECT]. The current setting is displayed in reverse. 3. Select the item to be set. Initial setting: ALL 4. Press the start key. The setting is set. **Completion** Press the stop key. The screen for selecting a maintenance item No. is displayed. **Supplement** The setting must be made after re-entering maintenance mode because it will be cleared when maintenance mode is canceled and power is switched off.

Display	Description
ALL	All ports
PORT 1	Port 1 (Fax control PWB)
PORT 2	Port 2 (Optional dual FAX)

Item No.	Description
U699	**Setting the software switches**

Description
Sets the software switches on the FAX control PWB individually.
Purpose
To change the setting when a problem such as split output of received originals occurs.
Since the communication performance is largely affected, normally this setting need not be changed.

Method
1. Press the start key.
2. Press [SW No.].
3. Enter the desired software switch number (3 digits) using the +/- keys or the numeric keys and press the start key.
4. Use numeric keys 0 to 7 to switch each bit between 0 and 1.
5. Press the start key to set the value.

Completion
Press the stop key. The screen for selecting a maintenance item No. is displayed.

List of Software Switches of Which the Setting Can Be Changed

<Communication control procedure>

No.	Bit	Item
36	7654	Coding format in transmission
	3210	Coding format in reception
37	5	33600 bps/V34
	4	31200 bps/V34
	3	28800 bps/V34
	2	26400 bps/V34
	1	24000 bps/V34
	0	21600 bps/V34
38	7	19200 bps/V34
	6	16800 bps/V34
	5	14400 bps/V34
	4	12000 bps/V34
	3	9600 bps/V34
	2	7200 bps/V34
	1	4800 bps/V34
	0	2400 bps/V34
41	3	FSK detection in V.8
42	4	4800 bps when low-speed setting is active
	2	FIF length in transmission of more than 4 times of DIS/DTC signal

Item No.	Description
U699	

<Communication time setting>

No.	Bit	Item
53	76543210	T3 timeout setting
54	76543210	T4 timeout setting (automatic equipment)
55	76543210	T5 timeout setting
60	76543210	Time before transmission of CNG (1100 Hz) signal
63	76543210	T0 timeout setting (manual equipment)
64	7	Phase C timeout in ECM reception
66	76543210	Timeout 1 in countermeasures against echo
68	76543210	Timeout for FSK detection start in V.8

<Modem setting>

No.	Bit	Item
89	76543	RX gain adjust

<NCU setting>

No.	Bit	Item
121	7654	Dial tone/busy tone detection pattern
122	7654	Busy tone detection pattern
	1	Busy tone detection in automatic FAX/TEL switching
125	76543210	Access code registration for connection to PSTN
126	7654	FAX/TEL automatic switching ring back tone ON/OFF cycle

<Calling time setting>

No.	Bit	Item
133	76543210	DTMF signal transmission time
134	76543210	DTMF signal pause time
141	76543210	Ringer detection cycle (minimum)
142	76543210	Ringer detection cycle (maximum)
143	76543210	Ringer ON time detection
144	76543210	Ringer OFF time detection
145	76543210	Ringer OFF non-detection time
147	76543210	Dial tone detection time (continuous tone)
148	76543210	Allowable dial tone interruption time
149	76543210	Time for transmitting selection signal after closing the DC circuit
151	76543210	Ringer frequency detection invalid time

Item No.	Description
U901	**Checking copy counts by paper feed locations** **Description** Displays or clears copy counts by paper feed locations. **Purpose** To check the time to replace consumable parts. Also to clear the counts after replacing the consumable parts. **Method** 1. Press the start key. The counts by paper feed locations are displayed. **Display** / **Description** MPT — MP tray Cassette1 — Cassette 1 Cassette2 — Cassette 2 Cassette3 — Cassette 3 (optional paper feeder) Cassette4 — Cassette 4 (optional paper feeder) Duplex — Duplex unit * : When an optional paper feed device is not installed, the corresponding count is not displayed. **Clearing** 1. Select the counts to be cleared. [Cassette3] and [Cassette4] cannot be cleared. 2. Select the counts for all and press [Clear]. 3. Press the start key. The counter value is cleared. **Completion** Press the stop key. The screen for selecting a maintenance item No. is displayed.

Item No.	Description
U903	**Checking/clearing the paper jam counts** **Description** Displays or clears the jam counts by jam locations. **Purpose** To check the paper jam status. Also to clear the jam counts after replacing consumable parts. **Method** 1. Press the start key. 2. Select the item. **Method: [Cnt]** 1. Select [Cnt]. The count of jam code by type is displayed. Codes for which the count value is 0 are not displayed. 2. Change the screen using the cursor up/down keys. 3. Select the count value for jam code and press [Clear]. The individual counter cannot be cleared. 4. Press the start key. The counter value is cleared. **Method: [Total Cnt]** 1. Select [Total Cnt]. The total number of jam code by type is displayed. 2. Change the screen using the cursor up/down keys. The total number of jam count cannot be cleared. **Completion** Press the stop key. The screen for selecting a maintenance item No. is displayed.

Display	Description
Cnt	Displays/clears the jam counts
Total Cnt	Displays the total jam counts

Item No.	Description
U904	**Checking/clearing the call for service counts** **Description** Displays or clears the service call code counts by types. **Purpose** To check the service call code status by types. Also to clear the service call code counts after replacing consumable parts. **Method** 1. Press the start key. 2. Select the item. **Method: [Cnt]** 1. Select [Cnt]. The count for service call detection by type is displayed. Codes for which the count value is 0 are not displayed. 2. Change the screen using the cursor up/down keys. 3. Select the count value for service call code and press [Clear]. The individual counter cannot be cleared. 4. Press the start key. The counter value is cleared. **Method: [Total Cnt]** 1. Select [Total Cnt]. The total number of service call counts by type is displayed. 2. Change the screen using the cursor up/down keys. The total number of service call count cannot be cleared. **Completion** Press the stop key. The screen for selecting a maintenance item No. is displayed.

Display	Description
Cnt	Displays/clears the call for service counts
Total Cnt	Displays the total call for service counts

Item No.	Description
U905	**Checking counts by optional devices** **Description** Displays the counts of document processor or document finisher. **Purpose** To check the use of document processor or document finisher. **Method** 1. Press the start key. 2. Select the device to be checked. The count of the selected device is displayed. DP DF **Completion** Press the stop key. The screen for selecting a maintenance item No. is displayed.
U906	**Resetting partial operation control** **Description** Resets the service call code for partial operation control. **Purpose** To be reset after partial operation is performed due to problems in the cassettes or other sections, and the related parts are serviced. **Method** 1. Press the start key. 2. Press [Execute]. 3. Press the start key to reset partial operation control. 4. Turn the main power switch off and on. Allow more than 5 seconds between Off and On.

Display	Description
DP	Counts of document processor
DF	Counts of document finisher

DP

Display	Description
ADP	Counts of single-sided originals that has passed through the DP
RADP	Counts of double-sided originals that has passed through the DP

DF

Display	Description
Sorter	Counts of copies that has passed through the sorter
Staple	Frequency the stapler has been activated

Item No.	Description
U908	**Checking the total counter value** **Description** Displays the total counter value. **Purpose** To check the total counter value. **Method** 1. Press the start key. The total count value is displayed. **Completion** Press the stop key. The screen for selecting a maintenance item No. is displayed.
U910	**Clearing the print coverage data** **Description** Clears the accumulated data for the print coverage per A4 size paper and its period of time (as shown on the service status report). **Purpose** To clear data as required at times such as during maintenance service. **Method** 1. Press the start key. 2. Select [Execute]. 3. Press the start key. The print coverage data is cleared. **Completion** Press the stop key. The screen for selecting a maintenance item No. is displayed.

Item No.	Description
U911	**Checking copy counts by paper sizes** **Description** Displays the paper feed counts by paper sizes. **Purpose** To check the counts after replacing consumable parts. **Method** 1. Press the start key. The screen for the paper feed counts by paper size is displayed. **Completion** Press the stop key. The screen for selecting a maintenance item No. is displayed.

Display (metric)	Description	Display (inch)	Description
A3	Paper feed counts for A3	Ledger	Paper feed counts for Ledger
B4	Paper feed counts for B4	Legal	Paper feed counts for Legal
A4	Paper feed counts for A4	Letter	Paper feed counts for Letter
B5	Paper feed counts for B5	Statement	Paper feed counts for Statement
A5	Paper feed counts for A5		
Folio	Paper feed counts for Folio	ETC	Paper feed counts for other size

Item No.	Description
U917	**Setting backup data reading/writing** **Description** Retrieves the backup data to a USB memory from the machine; or writes the data from the USB memory to the machine. **Purpose** Machine information is backed up and restored. **Method** 1. Press the power key on the operation panel, and after verifying the power indicator has gone off, switch off the main power switch. 2. Insert USB memory in USB memory slot. 3. Turn the main power switch on. Wait for 10 seconds to allow the machine to recognize the USB memory. 4. Enter the maintenance item. 5. Press the start key. 6. Select the item.

Display	Description	Depending data
Address Book	Address book	-
Job Account	Job accounting	-
One Touch	Information on one-touch key	Address book
User	User managements	Job accounting
Program	Program information	Job accountings and user managements
Shortcut	Shortcut information	Job accountings, user managements and document box information
Document Box	Document box information	Job accountings and user managements
Fax Forward	FAX transfer information	Job accountings, user managements and document box information
IC Card	IC Card information	-

* : Since data are dependent with each other, data other than those assigned are also retrieved or written in.

7. Select [Export] or [Import] and press the start key.
8. Press the start key. Starts reading or writing.
   The progress of selected item is displayed in %.
   When an error occurs, the operation is canceled and an error code is displayed.
9. When normally completed, [Finish] is displayed.
10. Turn the main power switch off and on after completing writing when selecting [Import].
    Allow more than 5 seconds between Off and On.

Item No.	Description
U917	**Error Codes**

Codes	Description	Codes	Description
e002	Parameter error	e31e	User managements error
e003	File write error	e31f	User managements open error
e004	File initialization error	e320	User managements error
e005	File error	e321	User managements open error
e006	Processing error	e322	User managements list error
e010	Address book clear error (contact)	e323	User managements list error
e011	Address book open error (contact)	e324	Shortcut open error
e012	Address book list error (contact)	e325	Shortcut list error
e013	Address book list error (contact)	e326	Shortcut list error
e014	Address book clear error (group)	e410	Box file open error
e015	Address book open error (group)	e411	Box error in writing
e016	Address book list error (group)	e412	Box error in reading
e017	Address book list error (group)	e413	Box list error
e110	Job accounting clear error	e414	Box list error
e111	Job accounting open error	e415	Box error
e112	Job accounting open error	e416	Box error
e113	Job accounting error in writing	e417	Box open error
e114	Job accounting list error	e418	Box close error
e115	Job accounting list error	e419	Box creation error
e210	One-touch open error	e41a	Box creation error
e211	One-touch list error	e41b	Box deletion error
e212	One-touch list error	e41c	Box movement error
e310	User managements backup error	e510	Program error in writing
e311	User managements clear error	e511	Program error in reading
e312	User managements open error	e710	Fax memory open error
e313	User managements open error	e711	Fax memory initialization error
e314	User managements open error	e712	Fax memory list error
e315	User managements error in writing	e713	Fax memory error
e316	User managements list error	e714	Fax memory error
e317	User managements list error	e715	Fax memory mode error
e318	User managements list error	e716	Fax memory error
e319	User managements list error	e717	Fax memory error
e31a	User managements open error	e718	Fax memory mode error
e31b	User managements error	e910	File reading error
e31c	User managements error	e911	File writing error
e31d	User managements open error	e912	Data mismatch

Item No.	Description
U917	**Error Codes**

Codes	Description	Codes	Description
e913	Log file open error	d008	File rename error
e914	Log file error in writing	d009	File open error
e915	Directory open error	d00a	File close error
e916	Directory error in reading	d00b	File reading error
e917	Synchronization error	d00c	File writing error
e918	Synchronization error	d00d	File copy error
d000	Unspecified error	d00e	File compressed error
d001	HDD unavailable	d00f	File decompressed error
d002	USB memory is not inserted	d010	Directory open error
d003	File for writing is not found in the USB	d011	Directory creation error
d004	File for reading is not found in the HDD	d012	File writing error
d005	USB error in writing	d013	File reading error
d006	USB error in reading	d014	File deletion error
d007	USB unmount error	d015	File copy error to the USB

Completion

Press the stop key. The screen for selecting a maintenance item No. is displayed.

<table>
<tr><th>Item No.</th><th>Description</th></tr>
<tr><td>U920</td><td>

Checking the copy counts

Description
Checks the copy counts.
Purpose
To check the copy counts.

Method
1. Press the start key. The current counts are displayed.

<table>
<tr><th>Display</th><th>Description</th></tr>
<tr><td>Color Copy(H)</td><td>Count value of full color copy (coverage: high)</td></tr>
<tr><td>Color Copy(M)</td><td>Count value of full color copy (coverage: middle)</td></tr>
<tr><td>Color Copy(L)</td><td>Count value of full color copy (coverage: low)</td></tr>
<tr><td>Mono Color Copy</td><td>Count value of single color copy</td></tr>
<tr><td>B/W Copy</td><td>Count value of black/white copy</td></tr>
<tr><td>Color Prn(H)</td><td>Count value of full color print (coverage: high)</td></tr>
<tr><td>Color Prn(M)</td><td>Count value of full color print (coverage: middle)</td></tr>
<tr><td>Color Prn(L)</td><td>Count value of full color print (coverage: low)</td></tr>
<tr><td>B/W Prn</td><td>Count value of black/white print</td></tr>
<tr><td>B/W Fax</td><td>Count value of black/white FAX</td></tr>
</table>

Completion
Press the stop key. The screen for selecting a maintenance item No. is displayed.

</td></tr>
<tr><td>U927</td><td>

Clearing the all copy counts and machine life counts (one time only)

Description
Resets all of the counts back to zero.

Supplement
The total account counter and the machine life counter can be cleared only once if all count values are 1000 or less.

Method
1. Press the start key.
2. Select [Execute].
3. Press the start key. All copy counts and machine life counts are cleared.

Completion
Press the stop key. The screen for selecting a maintenance item No. is displayed.

</td></tr>
</table>

Item No.	Description
U928	**Checking machine life counts** **Description** Displays the machine life counts. **Purpose** To check the machine life counts. **Method** 1. Press the start key. The current machine life counts is displayed. **Completion** Press the stop key. The screen for selecting a maintenance item No. is displayed.
U942	**Setting of deflection for feeding from DP** **Description** Adjusts the deflection generated when the document processor is used. **Purpose** Use this mode if an original non-feed jam, oblique feed or wrinkling of original occurs when the document processor is used. **Setting** 1. Press the start key. 2. Press the system menu key. 3. Place an original on the DP and press the start key to make a test copy. 4. Press the system menu key. 5. Select the item to be adjusted. 6. Change the setting value using the +/- keys or numeric keys. 7. Press the start key. The value is set. **Completion** Press the stop key. The screen for selecting a maintenance item No. is displayed.

Display	Description
Cnt	Machine life counts

Display	Description	Setting range	Initial setting	Change in value per step
Front	Deflection of DP paper feed motor (DPPFM)	-50 to 50	0	0.119 mm
Back	Deflection of DP switchback motor (DPSBM)	-50 to 50	0	0.119 mm

* : The greater the value, the larger the deflection; the smaller the value, the smaller the deflection.
If an original non-feed jam or oblique feed occurs, increase the setting value. If wrinkling of original occurs, decrease the value.

Item No.	Description
U952	**Maintenance mode workflow**

Description
The maintenance modes configured in the machine or a USB flash device as a workflow must be executed in succession.
Purpose
This allows maintenance mode to be preset as a template.

Setting
1. Press the start key.
2. Select the item.

Display	Description
Continue	Restarting an abandoned workflow
Execute(USB)	Executes a workflow housed in a USB flash device
Execute	Executes a workflow stored in the machine
Entry(USB)	Exports a workflow housed in a USB flash device to the machine
Entry	Assigns a workflow in the machine manually
Log	Displays a list of workflows recently executed

Method: [Execute]
1. Select [Execute].
2. Select the workflow.

Display	Description
Data1 - 6	The area to store workflows in the machine

3. Press the start key.
   Executes maintenance modes defined in a workflow in succession.

Method: [Entry]
1. Select [Entry].
2. Select the area to store workflow.

Display	Description
Data1 - 6	The area to store workflows in the machine

3. Press the +/- keys or numeric keys to assign a maintenance Nbr. into a workflow.

Display	Description
Flow1 - 14	Assign a maintenance Nbr.

4. Press the start key. The setting is set.
5. Press the start key.
   Executes maintenance modes defined in a workflow in succession.

Item No.	Description
U952	**Method: [Execute(USB)]** 1. Press the power key on the operation panel, and after verifying the main power indicator has gone off, switch off the main power switch. 2. Insert USB memory in USB memory slot. 3. Turn the main power switch on. 4. Enter maintenance item U952. 5. Select [Execute(USB)]. 6. Select the workflow. **Display** / **Description**: WorkFlowData01 - 07 / Workflow data in the USB flash device 7. Press the start key. Executes maintenance modes defined in a workflow in succession. **Method: [Entry(USB)]** 1. Press the power key on the operation panel, and after verifying the main power indicator has gone off, switch off the main power switch. 2. Insert USB memory in USB memory slot. 3. Turn the main power switch on. 4. Enter maintenance item U952. 5. Select [Entry(USB)]. 6. Select the workflow. **Display** / **Description**: WorkFlowData01 - 07 / Workflow data in the USB flash device 7. Select the work flow save area. **Display** / **Description**: Data1 - 6 / The area to store workflows in the machine 8. Select [Execute]. Exports a workflow housed in a USB flash device to the machine. **Example** Registration is feasible when a USB flash device that stores the commands and text/maintenance ID (editable) is inserted. File Format: xxx.mwf !R! MNFC “WFPS”; 1.SET UP, 464, 469, 410, 000, 927, 278 2.WARRANTY, 089, 000 3.MK-A, 901, 127, 410, 251 4.MK-B, 410, 251 5.EH SET UP, 034 WRED;EXIT; **Completion** Press the stop key. The screen for selecting a maintenance item No. is displayed.

<table>
<tr><th>Item No.</th><th>Description</th></tr>
<tr><td>U964</td><td>

Checking of log

Description
Sends a log file saved on the HDD to a USB memory.
Purpose
To transfer a log file saved on the HDD to a USB memory as a means of investigating malfunctions.

Method
1. Press the power key on the operation panel, and after verifying the main power indicator has gone off, switch off the main power switch.
2. Insert USB memory in USB memory slot.
3. Turn the main power switch on.
4. Enter maintenance item U964.
5. Select [Execute].
6. Press the start key.
   Starts sending the log file saved on the HDD to the USB memory.
   Processing is displayed for approximately 3 to 5 minutes.
7. When normally completed, [Completed] is displayed.
8. Turn the main power switch off and on. Allow more than 5 seconds between Off and On.
   If a problem occurs during auto correction, error code is displayed.

Supplement
Instructions on how to obtain a log when the operation panel has frozen
Simultaneously press and hold the *, 8, 6, and Clear keys for 3 to 6 seconds to start logging.
The memory indicator keeps lighting during a log is generated and goes off when completed.

Error codes

<table>
<tr><th>Display</th><th>Description</th></tr>
<tr><td>No Usb Storage</td><td>USB memory is not inserted</td></tr>
<tr><td>No File</td><td>File is not found</td></tr>
<tr><td>Mount Error</td><td>USB memory mount error</td></tr>
<tr><td>File Delete Error</td><td>File deletion error</td></tr>
<tr><td>Copy Error</td><td>File copy error</td></tr>
<tr><td>Unmount Error</td><td>USB memory unmount error</td></tr>
<tr><td>Other Error</td><td>Other error</td></tr>
</table>

</td></tr>
<tr><td>U969</td><td>

Checking of toner area code

Description
Displays the toner area code.
Purpose
To check the toner area code.

Method
1. Press the start key. The toner area code is displayed.

Completion
Press the stop/clear key. The screen for selecting a maintenance item No. is displayed.

</td></tr>
</table>

<table>
<tr><th>Item No.</th><th>Description</th></tr>
<tr><td>U977</td><td>

Data capture mode

Description
Store the print data sent to the machine into USB memory.
Purpose
In case to occur the error at printing, check the print data sent to the machine.

Method
1. Press the power key on the operation panel, and after verifying the main power indicator has gone off, switch off the main power switch.
2. Insert USB memory in USB memory slot.
3. Turn the main power switch on.
4. Enter maintenance item U977.
5. Select [Execute].
6. Press the start key.
7. Send the print data to the machine.
   Once the print data is stored into USB memory, [Finish] will be displayed.

Completion
Press the stop key. The screen for selecting a maintenance item No. is displayed.

</td></tr>
<tr><td>U984</td><td>

Checking the developer unit number

Description
Displays the developer unit number.
Purpose
To check the developer unit number.

Method
1. Press the start key. The developer unit number for each color is displayed.

<table>
<tr><th>Display</th><th>Description</th></tr>
<tr><td>C</td><td>Cyan developer unit number</td></tr>
<tr><td>M</td><td>Magenta developer unit number</td></tr>
<tr><td>Y</td><td>Yellow developer unit number</td></tr>
<tr><td>K</td><td>Black developer unit number</td></tr>
</table>

Completion
Press the stop key. The screen for selecting a maintenance item No. is displayed.

</td></tr>
</table>

Item No.	Description
U985	**Displaying the developer history** **Description** Displays the past record of machine number and the developer counter. **Purpose** To check the count value of machine number and the developer counter. **Method** 1. Press the start key. 2. Select the color to check. **Display** / **Description** C — Cyan developer unit past record M — Magenta developer unit past record Y — Yellow developer unit past record K — Black developer unit past record 3. The history of a machine number and a developer counter for each color is displayed by three cases. **Display** / **Description** Machine History 1 - 3 — Historical records of the machine number Cnt History 1 - 3 — Historical records of developer counter **Completion** Press the stop key. The screen for selecting a maintenance item No. is displayed.

<table>
<tr><th>Item No.</th><th>Description</th></tr>
<tr><td>U989</td><td>

HDD Scan disk

Description
Restores data in the hard disk by scanning the disk.
Purpose
If power is turned off while accessing to the hard disk is performed, the control information in the hard disk drive may be damaged. Use this mode to restore the data.

Method
1. Press the start key.
2. Select [Execute].
3. Press the start key. When scanning of the disk is complete, the execution result is displayed.
4. Turn the main power switch off and on. Allow more than 5 seconds between Off and On.

</td></tr>
<tr><td>U991</td><td>

Checking the scanner operation count

Description
Displays the scanner operation count.
Purpose
To check the status of use of the scanner.

Method
1. Press the start key. The current operation counts is displayed.

<table>
<tr><th>Display</th><th>Description</th></tr>
<tr><td>Copy Scan</td><td>Scanner operation counts for copying</td></tr>
<tr><td>Fax Scan</td><td>Scanner operation counts for fax</td></tr>
<tr><td>Other Scan</td><td>Scanner operation counts except for copying</td></tr>
</table>

Completion
Press the stop key. The screen for selecting a maintenance No. item is displayed.

</td></tr>
</table>

This page is intentionally left blank.

1-4-1 Paper misfeed detection

(1) Paper misfeed indication

When a paper misfeed occurs, the machine immediately stops copying and displays the jam location on the operation panel.
Paper misfeed counts sorted by component can be checked by maintenance item U903.
To remove the paper jammed in the machine, open the right cover and pull the cassette out.
To remove the original jammed in DP or the document finisher, open the top cover.
Paper misfeed can be reset by opening and closing the respective covers.

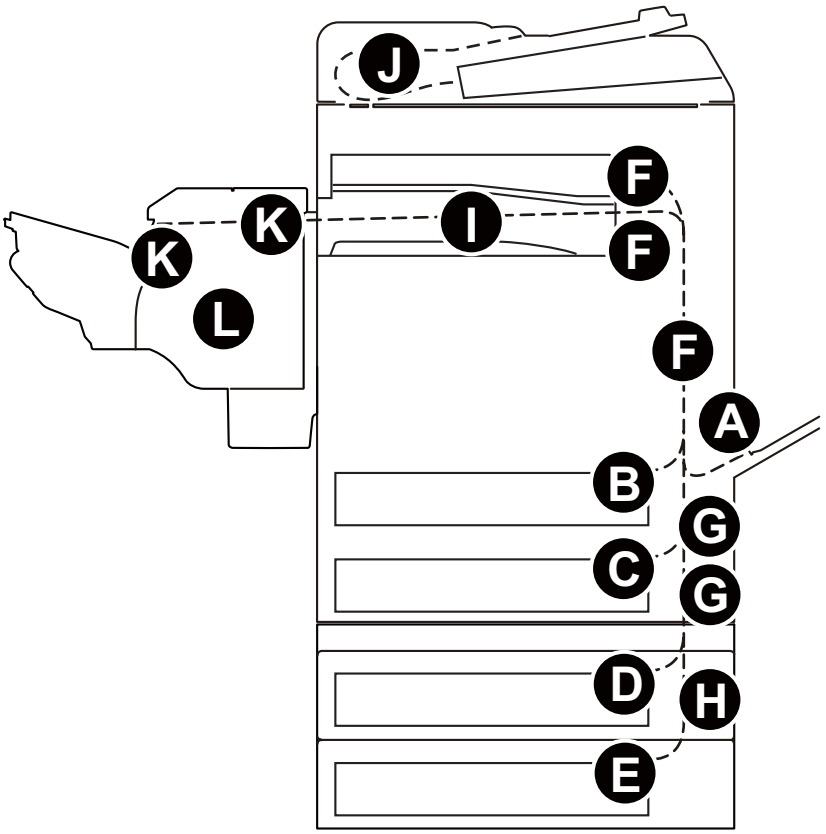

Figure 1-4-1

(A) Misfeed in the MP tray
(B) Misfeed in cassette 1
(C) Misfeed in cassette 2
(D) Misfeed in cassette 3 (option)
(E) Misfeed in cassette 4 (option)
(F) Misfeed in right cover 1
(G) Misfeed in right cover 2
(H) Misfeed in right cover 3 (option)
(I) Misfeed in the bridge (option)
(J) Misfeed in the document processor
(K) Misfeed in the document finisher (option)
(L) Stapler problem (option)

(2) Paper misfeed detection component

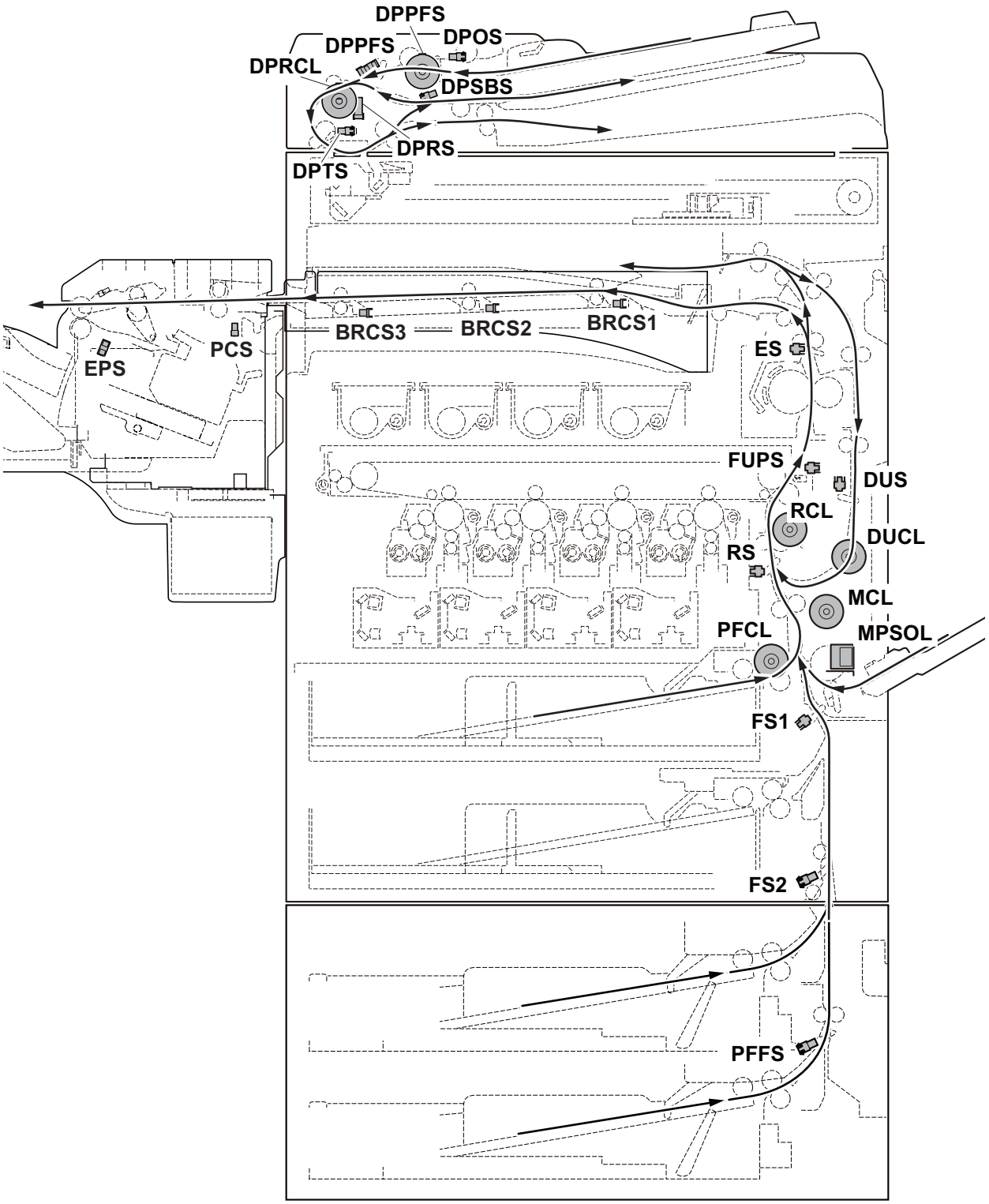

Figure 1-4-2

Code	Contents	Conditions	Jam location*
0000	Initial jam	The power is turned on when a sensor in the conveying system is on.	-
0100	Secondary paper feed request time out	Secondary paper feed request given by the controller is unreachable.	F
0101	Waiting for process package to be ready	Process package won't be ready.	-
0104	Waiting for conveying package to be ready	Conveying package won't be ready.	-
0106	Paper feeding request for duplex printing time out	Paper feeding request for duplex printing given by the controller is unreachable.	F
0107	Waiting for fuser package to be ready	Fuser package won't be ready.	-
0110	Right cover 1 open	The right cover 1 is opened during printing.	-
0111	Front cover open	The front cover is opened during printing.	-
0112	Right cover 3 open	The right cover 3 is opened during printing.	-
0120	Receiving a duplex paper feeding request while paper is empty	Paper feed request was received from the duplex section despite the absence of paper in the duplex section.	F
0121	Exceeding number of duplex pages circulated	The controller issued the duplex section a request for more pages than the duplex print cycle contains.	F
0210	Right cover 2 open	The right cover 2 is opened during printing.	-
0501	No paper feed from cassette 1	The registration sensor (RS) does not turn on during paper feed from cassette 1.	B
0502	No paper feed from cassette 2	Feed sensor 1 (FS1) does not turn on during paper feed from cassette 2 (Retry 1 times).	C
0503	No paper feed from cassette 3	Feed sensor 2 (FS2) does not turn on during paper feed from cassette 3 (Retry 1 times).	D
0504	No paper feed from cassette 4	PF feed sensor (PFFS) does not turn on during paper feed from cassette 4 (Retry 1 times).	E
0508	No paper feed from duplex section	The registration sensor (RS) does not turn on during paper feed from the duplex section.	F
0509	No paper feed from MP tray	The registration sensor (RS) does not turn on during paper feed from the MP tray.	A
0511	Multiple sheets in cassette 1	The registration sensor (RS) does not turn off during paper feed from cassette 1.	F
0512	Multiple sheets in cassette 2	Feed sensor 1 (FS1) does not turn off during paper feed from cassette 2.	G
0513	Multiple sheets in cassette 3	Feed sensor 2 (FS2) does not turn off during paper feed from cassette 3.	G

*: Refer to figure 1-4-1 for paper jam location (see page 1-4-1).

Code	Contents	Conditions	Jam location*
0514	Multiple sheets in cassette 4	PF feed sensor (PFFS) does not turn off during paper feed from cassette 4.	G
0518	Multiple sheets in duplex section	The registration sensor (RS) does not turn off during paper feed from the duplex section.	F
0519	Multiple sheets in MP tray	The registration sensor (RS) does not turn off during paper feed from theMP tray.	F
1403	Feed sensor 1 non arrival jam	Feed sensor 1 (FS1) does not turn on during paper feed from cassette 3.	G
1404		Feed sensor 1 (FS1) does not turn on during paper feed from cassette 4.	G
1413	Feed sensor 1 stay jam	Feed sensor 1 (FS1) does not turn off during paper feed from cassette 3.	F
1414		Feed sensor 1 (FS1) does not turn off during paper feed from cassette 4.	F
1604	Feed sensor 2 non arrival jam	Feed sensor 2 (FS2) does not turn on during paper feed from cassette 4.	H
1614	Feed sensor 2 stay jam	Feed sensor 2 (FS2) does not turn off during paper feed from cassette 4.	G
4002	Registration sensor non arrival jam	The registration sensor (RS) does not turn on during paper feed from cassette 2.	G
4003		The registration sensor (RS) does not turn on during paper feed from cassette 3.	G
4004		The registration sensor (RS) does not turn on during paper feed from cassette 4.	G
4012	Registration sensor stay jam	The registration sensor (RS) does not turn off during paper feed from cassette 2.	F
4013		The registration sensor (RS) does not turn off during paper feed from cassette 3.	F
4014		The registration sensor (RS) does not turn off during paper feed from cassette 4.	F
4101	Fuser pre sensor non arrival jam	The fuser pre sensor (FUPS) does not turn on during paper feed from cassette 1.	F
4102		The fuser pre sensor (FUPS) does not turn on during paper feed from cassette 2.	F
4103		The fuser pre sensor (FUPS) does not turn on during paper feed from cassette 3.	F
4104		The fuser pre sensor (FUPS) does not turn on during paper feed from cassette 4.	F
4108		The fuser pre sensor (FUPS) does not turn on during paper feed from duplex section.	F
4109		The fuser pre sensor (FUPS) does not turn on during paper feed from MP tray.	F

*: Refer to figure 1-4-1 for paper jam location (see page 1-4-1).

Code	Contents	Conditions	Jam location*
4111	Fuser pre sensor stay jam	The fuser pre sensor (FUPS) does not turn off during paper feed from cassette 1.	F
4112		The fuser pre sensor (FUPS) does not turn off during paper feed from cassette 2.	F
4113		The fuser pre sensor (FUPS) does not turn off during paper feed from cassette 3.	F
4114		The fuser pre sensor (FUPS) does not turn off during paper feed from cassette 4.	F
4118		The fuser pre sensor (FUPS) does not turn off during paper feed from the duplex section.	F
4119		The fuser pre sensor (FUPS) does not turn off during paper feed from the MP tray.	F
4201	Eject sensor non arrival jam	The eject sensor (ES) does not turn on during paper feed from cassette 1.	F
4202		The eject sensor (ES) does not turn on during paper feed from cassette 2.	F
4203		The eject sensor (ES) does not turn on during paper feed from cassette 3.	F
4204		The eject sensor (ES) does not turn on during paper feed from cassette 4.	F
4208		The eject sensor (ES) does not turn on during paper feed from duplex section.	F
4209		The eject sensor (ES) does not turn on during paper feed from MP tray.	F
4211	Eject sensor stay jam	The eject sensor (ES) does not turn off during paper feed from cassette 1.	I
4212		The eject sensor (ES) does not turn off during paper feed from cassette 2.	I
4213		The eject sensor (ES) does not turn off during paper feed from cassette 3.	I
4214		The eject sensor (ES) does not turn off during paper feed from cassette 4.	I
4218		The eject sensor (ES) does not turn off during paper feed from the duplex section.	I
4219		The eject sensor (ES) does not turn off during paper feed from the MP tray.	I

*: Refer to figure 1-4-1 for paper jam location (see page 1-4-1).

Code	Contents	Conditions	Jam location*
4301	Duplex sensor non arrival jam	The duplex sensor (DUS) does not turn on during paper feed from cassette 1.	F
4302		The duplex sensor (DUS) does not turn on during paper feed from cassette 2.	F
4303		The duplex sensor (DUS) does not turn on during paper feed from cassette 3.	F
4304		The duplex sensor (DUS) does not turn on during paper feed from cassette 4.	F
4309		The duplex sensor (DUS) does not turn on during paper feed from the MP tray.	F
4311	Duplex sensor stay jam	The duplex sensor (DUS) does not turn off during paper feed from cassette 1.	F
4312		The duplex sensor (DUS) does not turn off during paper feed from cassette 2.	F
4313		The duplex sensor (DUS) does not turn off during paper feed from cassette 3.	F
4314		The duplex sensor (DUS) does not turn off during paper feed from cassette 4.	F
4319		The duplex sensor (DUS) does not turn off during paper feed from the MP tray.	F
4901	Bridge conveying sensor 1 non arrival jam	The bridge conveying sensor 1 (BRCS1) does not turn on during paper feed from cassette 1.	I
4902		The bridge conveying sensor 1 (BRCS1) does not turn on during paper feed from cassette 2.	I
4903		The bridge conveying sensor 1 (BRCS1) does not turn on during paper feed from cassette 3.	I
4904		The bridge conveying sensor 1 (BRCS1) does not turn on during paper feed from cassette 4.	I
4908		The bridge conveying sensor 1 (BRCS1) does not turn on during paper feed from duplex section.	I
4909		The bridge conveying sensor 1 (BRCS1) does not turn on during paper feed from the MP tray.	I

*: Refer to figure 1-4-1 for paper jam location (see page 1-4-1).

Code	Contents	Conditions	Jam location*
4911	Bridge conveying sensor 1 stay jam	The bridge conveying sensor 1 (BRCS1) does not turn off during paper feed from cassette 1.	I
4912		The bridge conveying sensor 1 (BRCS1) does not turn off during paper feed from cassette 2.	I
4913		The bridge conveying sensor 1 (BRCS1) does not turn off during paper feed from cassette 3.	I
4914		The bridge conveying sensor 1 (BRCS1) does not turn off during paper feed from cassette 4.	I
4918		The bridge conveying sensor 1 (BRCS1) does not turn off during paper feed from duplex section.	I
4919		The bridge conveying sensor 1 (BRCS1) does not turn off during paper feed from the MP tray.	I
5001	Bridge conveying sensor 3 non arrival jam	The bridge conveying sensor 3 (BRCS3) does not turn on during paper feed from cassette 1.	I
5002		The bridge conveying sensor 3 (BRCS3) does not turn on during paper feed from cassette 2.	I
5003		The bridge conveying sensor 3 (BRCS3) does not turn on during paper feed from cassette 3.	I
5004		The bridge conveying sensor 3 (BRCS3) does not turn on during paper feed from cassette 4.	I
5008		The bridge conveying sensor 3 (BRCS3) does not turn on during paper feed from the duplex section.	I
5009		The bridge conveying sensor 3 (BRCS3) does not turn on during paper feed from theMP tray.	I
5011	Bridge conveying sensor 3 stay jam	The bridge conveying sensor 3 (BRCS3) does not turn off during paper feed from cassette 1.	I
5012		The bridge conveying sensor 3 (BRCS3) does not turn off during paper feed from cassette 2.	I
5013		The bridge conveying sensor 3 (BRCS3) does not turn off during paper feed from cassette 3.	I
5014		The bridge conveying sensor 3 (BRCS3) does not turn off during paper feed from cassette 4.	I
5018		The bridge conveying sensor 3 (BRCS3) does not turn off during paper feed from duplex section.	I
5019		The bridge conveying sensor 3 (BRCS3) does not turn off during paper feed from the MP tray.	I
6023	Staple cover open	The staple cover is opened during operation.	-
6043	DF top cover open	The DF top cover is opened during operation.	-
6103	DF paper conveying sensor non arrival jam	The paper conveying sensor (PCS) does not turned on even if a specified time has elapsed after the machine eject signal was received.	K

*: Refer to figure 1-4-1 for paper jam location (see page 1-4-1).

Code	Contents	Conditions	Jam location*
6113	DF paper conveying sensor stay jam	The paper conveying sensor (PCS) does not turn off within the specified time of its turning on.	K
6123	DF paper conveying sensor remaining jam	The paper conveying sensor (PCS) does not turned on when the power is turned on or the cover is closed.	K
6413	DF eject paper sensor stay jam	The eject paper sensor (EPS) does not turn off within the specified time.	K
6423	DF eject paper sensor remaining jam	The eject paper sensor (EPS) does not turned on when the power is turned on or the cover is closed.	K
6803	Front adjustment plate operation ON error	The adjustment sensor 1 (ADS1) does turned on when the job is executed.	H
6813	Front adjustment plate operation OFF error	The adjustment sensor 1 (ADS1) does not turned off when the job is executed.	H
6903	Rear adjustment plate operation ON error	The adjustment sensor 2 (ADS2) does not turned on when the job is executed.	H
6913	Rear adjustment plate operation OFF error	The adjustment sensor 2 (ADS2) does not turned off when the job is executed.	H
7013	Staple operation error	The next staple hasn't head-poked for the next copy to bind after a predetermined interval while clinching has commenced.	H
7023	Staple initial operation error	Head-poking has not been accomplished after 10 attempts in the initialization at power up or closing the cover.	H
7913	Sequence error 1 (operation prohibited)	Operation commenced in the state the finisher is prohibited to operate.	-
7923	Sequence error 2 (initialoperation error)	A request for maintenance mode has occurred in the state the finisher is prohibited to operate or has commenced operation.	-
7933	Sequence error 3 (Error in the reception of backup data)	A backup data command has been received in the state the operation has initiated.	-
7943	Sequence error 4 (standby)	Operation has started in the state standby is prohibited.	-
7953	Sequence error 5 (Error in between copies)	An illegal inter-page or inter-copy interval has occurred.	-
7963	Sequence error 6	The finisher does not deliver the eject-complete command in 15 seconds after the bridge eject sensor is turned off.	-
9000	No paper feed from DP	DP feed sensor (DPPFS) does not turn on during original feed from DP (Retry 5 times).	J
9001	DP original conveying jam	DP timing sensor (DPTS) turns off within the specified time since the sensor turns on.	J

*: Refer to figure 1-4-1 for paper jam location (see page 1-4-1).

Code	Contents	Conditions	Jam location*
9004	DP original switchback jam	During duplex switchback scanning, the DP registration sensor (DPRS) does not turn on within specified time of the DP timing sensor (DPTS) turning off.	J
9010	DP open	The DP is opened during original feeding. Sensor in the conveying system is on when the power is turned on or the cover is closed.	-
9011	DP top cover open	The DP top cover is opened during original feeding.	-
9110	DP paper feed sensor stay jam	The DP paper feed sensor (DPPFS) or DP registration sensor (DPRS) does not turn off within the specified time of the DP timing sensor (DPTS) turning on.	J
9200	DP registration sensor non arrival jam	The DP registration sensor (DPRS) does not turn on within the specified time of the DP paper feed sensor (DPPFS) turning on.	J
9400	DP timing sensor non arrival jam	The DP timing sensor (DPTS) does not turn on within the specified time of the DP registration sensor (DPRS) turning on (Retry 5 times).	J
9410	DP timing sensor stay jam	The DP timing sensor (DPTS) does not turned off within the specified time its turning on.	J

*: Refer to figure 1-4-1 for paper jam location (see page 1-4-1).

1-4-2 Self-diagnostic function

(1) Self-diagnostic function

This machine is equipped with self-diagnostic function. When a problem is detected, the machine stops printing and display an error message on the operation panel. An error message consists of a message prompting a contact with service personnel and a four-digit error code indicating the type of the error.

(2) Self-diagnostic codes

If the part causing the problems not designated as a service part, replace the assembly comprising the part.

Code	Contents	Causes	Check procedures/ corrective measures
0030	**FAX control PWB system error** Processing with the fax software was disabled due to a hardware problem.	Defective PWB.	Replace the fax control PWB and check for correct operation.
0070	**FAX control PWB incompatible detection error** In the initial communication with the FAX control PWB, the normal communication command is not transmitted.	Defective FAX software.	Install the fax software.
		Defective PWB.	Replace the fax control PWB and check for correct operation.
0100	**Backup memory device error**	Defective flash memory.	Replace the main PWB and check for correct operation (see page 1-5-33).
		Defective PWB.	
0120	**MAC address data error** The data includes an invalid MAC address.	Defective flash memory.	Replace the main PWB and check for correct operation (see page 1-5-33).
		Defective PWB.	Replace the engine PWB and check for correct operation (see page 1-5-35).
0150	**Backup memory read/write error (engine PWB)** Detecting engine PWB EEPROM communication error.	The engine PWB EEPROM was improperly installed.	Check the EEPROM is properly installed and remedy if necessary.
		Defective PWB.	Replace the engine PWB and check for correct operation (see page 1-5-35).
		Defective EEPROM.	Contact the Service Administrative Division.
0160	**Backup memory data error (engine PWB)**	Defective flash memory.	Replace the engine PWB and check for correct operation (see page 1-5-35).
		Defective PWB.	

Code	Contents	Causes	Check procedures/ corrective measures
0170	**Billing counting error** A checksum error is detected in the main and engine backup memories for the billing counters.	Data in the EEPROM .	Contact the Service Administrative Division.
		Defective PWB.	Replace the main PWB or the engine PWB and check for correct operation (see page 1-5-33, 1-5-35).
0180	**Machine number mismatch** Machine number of main and engine does not match.	Data in the EEPROM .	Contact the Service Administrative Division.
0320	**I/O CPU communication error** A communication error is detected 10 times in succession.	Defective PWB.	Replace the main PWB or the engine PWB and check for correct operation. (see page 1-5-33,1-5-35)
0620	**FAX image DIMM error** DIMM is not installed correctly. DIMM cannot be accessed.	DIMM installed incorrectly.	Check if the DIMM is inserted into the socket on the main PWB correctly.
		Defective PWB.	Replace the main PWB and check for correct operation (see page 1-5-33).
0630	**DMA error** DMA transmission of image data does not complete within the specified period of time.	Poor contact in the connector terminals.	Check the connection the signal cable for CIS and the main PWB, and the continuity across the connector terminals. Repair or replace if necessary.
		Defective PWB.	Replace the main PWB and check for correct operation (see page 1-5-33).
0640	**Hard disk error** The hard disk cannot be accessed.	Defective connector cable or poor contact in the connector.	Reinsert the connector. Also check for continuity within the connector cable. If none, replace the cable.
		Defective hard disk.	Run U024 (HDD formatting) without turning the power off to initialize the hard disk. Replace the hard disk drive and check for correct operation if the problem is still detected after initialization.
		Defective PWB.	Replace the main PWB and check for correct operation (see page 1-5-33).
0650	**FAX image DIMM check error** Improper DIMM is installed.	DIMM installed incorrectly.	Check if the DIMM is inserted into the socket on the main PWB correctly.
		DIMM of another machine is installed.	Perform maintenance mode U671 (RECOVERY FAX DIMM).
		Defective PWB.	Replace the main PWB and check for correct operation (see page 1-5-33).

Code	Contents	Causes	Check procedures/ corrective measures
0800	**Image processing error** The JAM100 fee counter is continuously generated.	Defective main PWB.	Replace the main PWB and check for correct operation (see page 1-5-33).
0830	**FAX control PWB flash program area checksum error** A checksum error occurred with the program of the FAX control PWB.	Defective FAX software.	Install the fax software.
		Defective PWB.	Replace the FAX control PWB.
0840	**Faults of RTC** The time is judged to go back based on the comparison of the RTC time and the current time or five years or more have passed.	The battery is disconnected from the main PWB.	Check visually and remedy if necessary
		Defective PWB.	Replace the main PWB and check for correct operation (see page 1-5-33).
0870	**FAX control PWB to main PWB high capacity data transfer error** High-capacity data transfer between the FAX control PWB and the main PWB of the machine was not normally performed even if the data transfer was retried the specified times.	Improper installation FAX control PWB.	Reinstall the FAX control PWB.
		Defective PWB.	Replace the FAX control PWB or main PWB and check for correct operation (see page 1-5-33).
0920	**Fax file system error** The backup data is not retained for file system abnormality of flash memory of the FAX control PWB.	Defective PWB.	Replace the FAX control PWB and check for correct operation.
0980	**24 V power down detect** 24V disconnection signal is detected for 1.5 seconds.	Defective power source PWB.	Replace the power source PWB and check for correct operation (see page 1-5-38).

Code	Contents	Causes	Check procedures/ corrective measures
1010	**Lift motor 1 error** After cassette 1 is inserted, the lift sensor 1 does not turn on within 15 s. This error is detected five times successively.	Defective bottom plate elevation mechanism in the cassette.	Check to see if the bottom plate can move smoothly and repair any problem that is found.
		Defective connector cable or poor contact in the connector.	Reinsert the connector. Also check for continuity of the connector cable. If necessary, replace the cable. Lift motor 1 and engine PWB (YC15)
		Defective drive transmission system of the lift motor.	Check if the gears rotate smoothly. If not, grease the bushes and gears. Check for broken gears and replace if necessary.
		Defective lift motor.	Replace the lift motor 1.
		Defective PWB.	Replace the engine PWB and check for correct operation (see page 1-5-35).
1020	**Lift motor 2 error** After cassette 2 is inserted, PF lift sensor 2 does not turn on within 15s. This error is detected five times successively.	Defective bottom plate elevation mechanism in the cassette.	Check to see if the bottom plate can move smoothly and repair any problem that is found.
		Defective connector cable or poor contact in the connector.	Reinsert the connector. Also check for continuity of the connector cable. If necessary, replace the cable. Lift motor 2 and Video PWB (YC8)
		Defective drive transmission system of the PF lift motor 1.	Check if the gears rotate smoothly. If not, grease the bushes and gears. Check for broken gears and replace if necessary.
		Defective lift motor.	Replace the PF lift motor 2.
		Defective PWB.	Replace the video PWB and check for correct operation (see page 1-5-39).

Code	Contents	Causes	Check procedures/ corrective measures
1030	**PF lift motor 1 error (paper feeder)** After cassette 3 is inserted, PF lift sensor 1 does not turn on within 15 s. This error is detected five times successively.	Defective bottom plate elevation mechanism in the cassette.	Check to see if the bottom plate can move smoothly and repair it if any problem is found.
		Defective connector cable or poor contact in the connector.	Reinsert the connector. Also check for continuity of the connector cable. If necessary, replace the cable. PF lift motor 1 and PF main PWB (YC4)
		Defective drive transmission system of the PF lift motor 1.	Check if the gears rotate smoothly. If not, grease the bushes and gears. Check for broken gears and replace if any.
		Defective PF lift motor 1.	Replace the PF lift motor 1.
		Defective PWB.	Replace the PF main PWB (Refer to the service manual of the paper feeder).
1040	**PF lift motor 2 error (paper feeder)** After cassette 4 is inserted, PF lift sensor 2 does not turn on within 15 s. This error is detected five times successively.	Defective bottom plate elevation mechanism in the cassette.	Check to see if the bottom plate can move smoothly and repair it if any problem is found.
		Defective connector cable or poor contact in the connector.	Reinsert the connector. Also check for continuity of the connector cable. If necessary, replace the cable. PF lift motor 2 and PF main PWB (YC7)
		Defective drive transmission system of the PF lift motor 2.	Check if the gears rotate smoothly. If not, grease the bushes and gears. Check for broken gears and replace if any.
		Defective PF lift motor 2.	Replace the PF lift motor 2.
		Defective PWB.	Replace the PF main PWB (Refer to the service manual of the paper feeder).
1800	**Paper feeder communication error** A communication error is detected 10 times in succession.	Improper installation of the paper feeder.	Follow the installation instruction carefully again.
		Defective connector cable or poor contact of the connector.	Reinsert the connector. Also check for continuity of the connector cable. If necessary, replace the cable. PF main PWB (YC3) and engine PWB (YC9)
		Defective PWB.	Replace the engine PWB or the PF main PWB (see page 1-5-35, Refer to the service manual of the paper feeder).

Code	Contents	Causes	Check procedures/ corrective measures
1900	**Paper feeder EEPROM error** When writing the data, the write data and the read data is not continuously in agreement 4 times.	Defective PWB.	Replace the PF main PWB (Refer to the service manual of the paper feeder).
		Device damage of EEPROM.	Contact the Service Administrative Division.
2101	**Developer motor K steady-state error** The rated speed signal detected the stability OFF continuously for 1 s after the developer motor K stabilizes.	Defective connector cable or poor contact in the connector.	Reinsert the connector. Also check for continuity of the connector cable. If necessary, replace the cable. Developer motor K and engine PWB (YC4)
		Defective drive transmission system.	Check if the rollers and gears rotate smoothly. If not, grease the bushings and gears. Check for broken gears and replace if necessary.
		Defective motor.	Replace the Developer motor K.
		Defective PWB.	Replace the engine PWB and check for correct operation (see page 1-5-35).
2102	**Developer motor YCM steady-state error** The rated speed signal detected the stability OFF continuously for 1 s after the developer motor YCM stabilizes.	Defective connector cable or poor contact in the connector.	Reinsert the connector. Also check for continuity within the connector cable. If none, replace the cable. Developer motor YCM and engine PWB (YC3)
		Defective drive transmission system.	Check if the rollers and gears rotate smoothly. If not, grease the bushings and gears. Check for broken gears and replace if any.
		Defective motor.	Replace the Developer motor YCM.
		Defective PWB.	Replace the engine PWB and check for correct operation (see page 1-5-35).
2111	**Developer motor K startup error** Developer motor K is not stabilized within 3 s since the motor is activated.	Defective connector cable or poor contact in the connector.	Reinsert the connector. Also check for continuity of the connector cable. If necessary, replace the cable. Developer motor K and engine PWB (YC4)
		Defective drive transmission system.	Check if the rollers and gears rotate smoothly. If not, grease the bushings and gears. Check for broken gears and replace if necessary.
		Defective motor.	Replace the Developer motor K.
		Defective PWB.	Replace the engine PWB and check for correct operation (see page 1-5-35).

Code	Contents	Causes	Check procedures/ corrective measures
2112	**Developer motor YCM startup error** Developer motor YCM is not stabilized within 3 s since the motor is activated.	Defective connector cable or poor contact in the connector.	Reinsert the connector. Also check for continuity within the connector cable. If necessary, replace the cable. Developer motor YCM and engine PWB (YC3)
		Defective drive transmission system.	Check if the rollers and gears rotate smoothly. If not, grease the bushings and gears. Check for broken gears and replace if necessary.
		Defective motor.	Replace the Developer motor YCM.
		Defective PWB.	Replace the engine PWB and check for correct operation (see page 1-5-35).
2201	**Drum motor K steady-state error** The rated speed signal detected the stability OFF continuously for 1 s after the drum motor K stabilizes.	Defective connector cable or poor contact in the connector.	Reinsert the connector. Also check for continuity within the connector cable. If none, replace the cable. Drum motor K and engine PWB (YC3)
		Defective drive transmission system.	Check if the rollers and gears rotate smoothly. If not, grease the bushings and gears. Check for broken gears and replace if any.
		Defective motor.	Replace the Drum motor K.
		Defective PWB.	Replace the engine PWB and check for correct operation (see page 1-5-35).
2202	**Drum motor YCM steady-state error** The rated speed signal detected the stability OFFcontinuously for 1 s after the drum motor YCM stabilizes.	Defective connector cable or poor contact in the connector.	Reinsert the connector. Also check for continuity within the connector cable. If none, replace the cable. Drum motor YCM and engine PWB (YC3)
		Defective drive transmission system.	Check if the rollers and gears rotate smoothly. If not, grease the bushings and gears. Check for broken gears and replace if any.
		Defective motor.	Replace the Drum motor YCM.
		Defective PWB.	Replace the engine PWB and check for correct operation (see page 1-5-35).

Code	Contents	Causes	Check procedures/ corrective measures
2211	**Drum motor K startup error** Drum motor K is not stabilized within 3 s since the motor is activated.	Defective connector cable or poor contact in the connector.	Reinsert the connector. Also check for continuity within the connector cable. If none, replace the cable. Drum motor K and engine PWB (YC3)
		Defective drive transmission system.	Check if the rollers and gears rotate smoothly. If not, grease the bushings and gears. Check for broken gears and replace if any.
		Defective motor.	Replace the Drum motor K.
		Defective PWB.	Replace the engine PWB and check for correct operation (see page 1-5-35).
2212	**Drum motor YCM startup error** Drum motor YCM is not stabilized within 3 s since the motor is activated.	Defective connector cable or poor contact in the connector.	Reinsert the connector. Also check for continuity within the connector cable. If none, replace the cable. Drum motor YCM and engine PWB (YC3)
		Defective drive transmission system.	Check if the rollers and gears rotate smoothly. If not, grease the bushings and gears. Check for broken gears and replace if any.
		Defective motor.	Replace the Drum motor YCM.
		Defective PWB.	Replace the engine PWB and check for correct operation (see page 1-5-35).
2300	**Fuser motor steady-state error** The rated speed signal detected the stability OFF continuously for 1 s after the fuser motor stabilizes.	Defective connector cable or poor contact in the connector.	Reinsert the connector. Also check for continuity within the connector cable. If none, replace the cable. Fuser motor and engine PWB (YC4)
		Defective drive transmission system.	Check if the rollers and gears rotate smoothly. If not, grease the bushings and gears. Check for broken gears and replace if any.
		Defective motor.	Replace the Fuser motor.
		Defective PWB.	Replace the engine PWB and check for correct operation (see page 1-5-35).
2310	**Fuser motor startup error** Fuser motor is not stabilized within 3 s since the motor is activated.	Defective connector cable or poor contact in the connector.	Reinsert the connector. Also check for continuity within the connector cable. If none, replace the cable. Fuser motor and engine PWB (YC4)
		Defective drive transmission system.	Check if the rollers and gears rotate smoothly. If not, grease the bushings and gears. Check for broken gears and replace if any.
		Defective motor.	Replace the fuser motor.
		Defective PWB.	Replace the engine PWB and check for correct operation (see page 1-5-35).

Code	Contents	Causes	Check procedures/ corrective measures
2500	**Conveying motor 2 steady-state error** The rated speed signal detected the stability OFF continuously for 1 s after the conveying motor 2 stabilizes.	Defective connector cable or poor contact in the connector.	Reinsert the connector. Also check for continuity within the connector cable. If none, replace the cable. Conveying motor 2 and video PWB (YC5)
		Defective drive transmission system.	Check if the rollers and gears rotate smoothly. If not, grease the bushings and gears. Check for broken gears and replace if any.
		Defective motor.	Replace the Conveying motor 2.
		Defective PWB.	Replace the video PWB and check for correct operation (see page 1-5-39).
2510	**Conveying motor 2 startup error** Conveying motor 2 is not stabilized within 2 s since the motor is activated.	Defective connector cable or poor contact in the connector.	Reinsert the connector. Also check for continuity within the connector cable. If none, replace the cable. Conveying motor 2 and engine PWB (YC2)
		Defective drive transmission system.	Check if the rollers and gears rotate smoothly. If not, grease the bushings and gears. Check for broken gears and replace if any.
		Defective motor.	Replace the conveying motor 2.
		Defective PWB.	Replace the engine PWB and check for correct operation (see page 1-5-35).
2550	**Conveying motor 1 steady-state error** The rated speed signal detected the stability OFF continuously for 1 s after the conveying motor 1 stabilizes.	Defective connector cable or poor contact in the connector.	Reinsert the connector. Also check for continuity within the connector cable. If none, replace the cable. Conveying motor 1 and engine PWB (YC2)
		Defective drive transmission system.	Check if the rollers and gears rotate smoothly. If not, grease the bushings and gears. Check for broken gears and replace if any.
		Defective motor.	Replace the Conveying motor 1.
		Defective PWB.	Replace the engine PWB and check for correct operation (see page 1-5-35).
2560	**Conveying motor 1 startup error** Conveying motor 1 is not stabilized within 2 s since the motor is activated.	Defective connector cable or poor contact in the connector.	Reinsert the connector. Also check for continuity within the connector cable. If none, replace the cable. Conveying motor 1 and engine PWB (YC2)
		Defective drive transmission system.	Check if the rollers and gears rotate smoothly. If not, grease the bushings and gears. Check for broken gears and replace if any.
		Defective motor.	Replace the conveying motor 1.
		Defective PWB.	Replace the engine PWB and check for correct operation (see page 1-5-35).

Code	Contents	Causes	Check procedures/ corrective measures
2600	**PF drive motor error** (paper feeder) When the PF drive motor is driven, error signal is detected continuously for 1 s.	Defective connector cable or poor contact in the connector.	Reinsert the connector. Also check for continuity within the connector cable. If none, replace the cable. PF drive motor and PF main PWB (YC2)
		Defective drive transmission system.	Check if the rollers and gears rotate smoothly. If not, grease the bushes and gears. Check for broken gears and replace if any.
		Defective motor.	Replace the PF drive motor.
		Defective PWB.	Replace the PF main PWB (Refer to the service manual for the paper feeder).
2700	**TC belt motor error** When the TC belt motor is driven, error signal is detected continuously for 3 s.	Defective connector cable or poor contact in the connector.	Reinsert the connector. Also check for continuity within the connector cable. If none, replace the cable. TC belt motor and TC PWB(YC2) TC PWB and TC connect PWB(YC1) TC connect PWB and engine PWB(YC5)
		Defective drive transmission system.	Check if the rollers and gears rotate smoothly. If not, grease the bushings and gears. Check for broken gears and replace if any.
		Defective motor.	Replace the TC belt motor.
		Defective PWB.	Replace the engine PWB or TC PWB or TC connect PWB check for correct operation (see page 1-5-35).
3100	**ISU home position error** ON/OFF of the HP sensor doesn't change after a prescribed pulse passes from power supply ON.	Defective connector cable or poor contact in the connector.	Reinsert the connector. Also check for continuity within the connector cable. If none, replace the cable. Home position sensor and ISC PWB (YC8) ISC PWB and main PWB (YC11)
		Defective home position sensor.	Replace the home position sensor.
		Defective ISU motor.	Replace the ISU motor.
		Defective CCD PWB.	Replace the image scanner unit (see page 1-5-22).
		Defective PWB.	Replace the main PWB and check for correct operation (see page 1-5-33).

Code	Contents	Causes	Check procedures/ corrective measures
3220	**Exposure lamp error** When the white standard data at the time of an initial is lower than a rated value.	Defective connector cable or poor contact in the connector.	Reinsert the connector. Also check for continuity within the connector cable. If none, replace the cable. CCD PWB and ISC PWB (YC9) ISC PWB and main PWB (YC11)
		Defective LED PWB.	Replace the LED unit and check for correct operation (see page 1-5-22).
		Defective PWB.	Replace the main PWB and check for correct operation (see page 1-5-33).
3300	**Optical system (AGC) error** After AGC, correct input is not obtained at CCD.	Defective connector cable or poor contact in the connector.	Reinsert the connector. Also check for continuity within the connector cable. If none, replace the cable. LED PWB and ISC PWB (YC6) CCD PWB (YC2) and ISC PWB (YC9) ISC PWB (YC3) and main PWB (YC11)
		Defective LED PWB or CCD PWB.	Replace the image scanner unit (see page 1-5-22).
		Defective PWB.	Replace the ISC PWB or the main PWB and check for correct operation (see page 1-5-33).
3500	**Communication error** A wrong read-back value.	Defective connector cable or poor contact in the connector.	Reinsert the connector. Also check for continuity within the connector cable. If none, replace the cable. CCD PWB and ISC PWB (YC9) ISC PWB and main PWB (YC11)
		Defective CCD PWB.	Replace the image scanner unit (see page 1-5-22).
		Defective PWB.	Replace the main PWB and check for correct operation (see page 1-5-33).
3600	**Scanner sequence error**	Defective main PWB or engine PWB.	Replace the main PWB or the engine PWB and check for correct operation (see page 1-5-33 or 1-5-35).
3700	**Scanner device error**	CCD connector inserted incorrectly.	Reinsert the image scanner unit connector if necessary.
3800	**AFE error** When writing the data, read and write data does not match 3 times in succession.	Defective ISC PWB.	Replace the ISC PWB and check for correct operation.
3900	**Backup memory read/write error (ISC PWB)** Read and write data does not match.	Defective backup memory or PWB.	Replace the ISC PWB and check for correct operation.

Code	Contents	Causes	Check procedures/ corrective measures
4001	**Polygon motor (K) steady-state error** The rated speed signal detected the stability OFF continuously for 1 s after the polygon motor (K) stabilizes.	Defective connector cable or poor contact in the connector.	Reinsert the connector. Also check for continuity within the connector cable. If none, replace the cable. Laser scanner unit (K) and LSU connect PWB(YC5) LSU connect PWB and engine PWB (YC12)
		Defective motor.	Replace the Laser scanner unit (K) (see page 1-5-21).
		Defective PWB.	Replace the engine PWB or LSU connect PWB and check for correct operation (see page 1-5-35).
4002	**Polygon motor (C) steady-state error** The rated speed signal detected the stability OFF continuously for 1 s after the polygon motor (C) stabilizes.	Defective connector cable or poor contact in the connector.	Reinsert the connector. Also check for continuity within the connector cable. If none, replace the cable. Laser scanner unit (C) and LSU connect PWB(YC6) LSU connect PWB and engine PWB (YC12)
		Defective motor.	Replace the Laser scanner unit (C) (see page 1-5-21).
		Defective PWB.	Replace the engine PWB or LSU connect PWB and check for correct operation (see page 1-5-35).
4003	**Polygon motor (M) steady-state error** The rated speed signal detected the stability OFF continuously for 1 s after the polygon motor (M) stabilizes.	Defective connector cable or poor contact in the connector.	Reinsert the connector. Also check for continuity within the connector cable. If none, replace the cable. Laser scanner unit (M) and LSU connect PWB(YC7) LSU connect PWB and engine PWB (YC12)
		Defective motor.	Replace the Laser scanner unit (M) (see page 1-5-21).
		Defective PWB.	Replace the engine PWB or LSU connect PWB and check for correct operation (see page 1-5-35).
4004	**Polygon motor (Y) steady-state error** The rated speed signal detected the stability OFF continuously for 1 s after the polygon motor (Y) stabilizes.	Defective connector cable or poor contact in the connector.	Reinsert the connector. Also check for continuity within the connector cable. If none, replace the cable. Laser scanner unit (Y) and LSU connect PWB(YC8) LSU connect PWB and engine PWB (YC12)
		Defective motor.	Replace the Laser scanner unit (Y) (see page 1-5-21).
		Defective PWB.	Replace the engine PWB or LSU connect PWB and check for correct operation (see page 1-5-35).

Code	Contents	Causes	Check procedures/ corrective measures
4011	**Polygon motor (K) startup error** Polygon motor (K) is not stabilized within 10 s since the motor is activated.	Defective connector cable or poor contact in the connector.	Reinsert the connector. Also check for continuity within the connector cable. If none, replace the cable. Laser scanner unit (K) and LSU connect PWB(YC5) LSU connect PWB and engine PWB (YC12)
		Defective motor.	Replace the Laser scanner unit (K) (see page 1-5-21).
		Defective PWB.	Replace the engine PWB or LSU connect PWB and check for correct operation (see page 1-5-35).
4012	**Polygon motor (C) startup error** Polygon motor (C) is not stabilized within 10 s since the motor is activated.	Defective connector cable or poor contact in the connector.	Reinsert the connector. Also check for continuity within the connector cable. If none, replace the cable. Laser scanner unit (C) and LSU connect PWB(YC7) LSU connect PWB and engine PWB (YC12)
		Defective motor.	Replace the Laser scanner unit (C) (see page 1-5-21).
		Defective PWB.	Replace the engine PWB or LSU connect PWB and check for correct operation (see page 1-5-35).
4013	**Polygon motor (M) startup error** Polygon motor (M) is not stabilized within 10 s since the motor is activated.	Defective connector cable or poor contact in the connector.	Reinsert the connector. Also check for continuity within the connector cable. If none, replace the cable. Laser scanner unit (M) and LSU connect PWB(YC6) LSU connect PWB and engine PWB (YC12)
		Defective motor.	Replace the Laser scanner unit (M) (see page 1-5-21).
		Defective PWB.	Replace the engine PWB or LSU connect PWB and check for correct operation (see page 1-5-35).
4014	**Polygon motor (Y) startup error** Polygon motor (Y) is not stabilized within 10 s since the motor is activated.	Defective connector cable or poor contact in the connector.	Reinsert the connector. Also check for continuity within the connector cable. If none, replace the cable. Laser scanner unit (Y) and LSU connect PWB(YC8) LSU connect PWB and engine PWB (YC12)
		Defective motor.	Replace the Laser scanner unit (Y) (see page 1-5-21).
		Defective PWB.	Replace the engine PWB or LSU connect PWB and check for correct operation (see page 1-5-35).

Code	Contents	Causes	Check procedures/ corrective measures
4101	**BD initialization problem (K)** BD is not detected within two seconds after the polygon motor stabilizes.	Defective connector cable or poor contact in the connector.	Reinsert the connector. Also check for continuity within the connector cable. If none, replace the cable. BDPWB and APCPWB APCPWB and LSU connect PWB (YC1) LSU connect PWB and engine PWB (YC12)
		Defective APCPWB.	Replace the Laser scanner unit (K). (see page 1-5-21)
		Defective BDPWB.	
		Defective PWB.	Replace the engine PWB or LSU connect PWB and check for correct operation (see page 1-5-35).
4102	**BD initialization problem (C)** BD is not detected within two seconds after the polygon motor stabilizes.	Defective connector cable or poor contact in the connector.	Reinsert the connector. Also check for continuity within the connector cable. If none, replace the cable. BDPWB and APCPWB APCPWB and LSU connect PWB (YC3) LSU connect PWB and engine PWB (YC12)
		Defective APCPWB.	Replace the Laser scanner unit (C). (see page 1-5-21)
		Defective BDPWB.	
		Defective PWB.	Replace the engine PWB or LSU connect PWB and check for correct operation (see page 1-5-35).
4103	**BD initialization problem (M)** BD is not detected within two seconds after the polygon motor stabilizes.	Defective connector cable or poor contact in the connector.	Reinsert the connector. Also check for continuity within the connector cable. If none, replace the cable. BDPWB and APCPWB APCPWB and LSU connect PWB (YC2) LSU connect PWB and engine PWB (YC12)
		Defective APCPWB.	Replace the Laser scanner unit (M). (see page 1-5-21)
		Defective BDPWB.	
		Defective PWB.	Replace the engine PWB or LSU connect PWB and check for correct operation (see page 1-5-35).

Code	Contents	Causes	Check procedures/ corrective measures
4104	**BD initialization problem (Y)** BD is not detected within two seconds after the polygon motor stabilizes.	Defective connector cable or poor contact in the connector.	Reinsert the connector. Also check for continuity within the connector cable. If none, replace the cable. BDPWB and APCPWB APCPWB and LSU connect PWB (YC4) LSU connect PWB and engine PWB (YC12)
		Defective APCPWB.	Replace the Laser scanner unit (M). (see page 1-5-21)
		Defective BDPWB.	
		Defective PWB.	Replace the engine PWB or LSU connect PWB and check for correct operation (see page 1-5-35).
4600	**LSU cleaning motor error** When the LSU cleaning motor is driven, an error signal is detected continuously for 2 s.	Defective connector cable or poor contact in the connector.	Reinsert the connector. Also check for continuity of the connector cable. If none, replace the cable. LSU cleaning motor and LSU connect PWB(YC11) LSU connect PWB and engine PWB(YC12)
		Defective drive transmission system.	Check if the rollers and gears rotate smoothly. If not, grease the bushings and gears. Check for broken gears and replace if any.
		Defective motor.	Replace the LSU cleaning motor.
		Defective PWB.	Replace the engine PWB or LSU connect PWB check for correct operation (see page 1-5-35).
4700	**VIDEO ASIC device error** Mismatch of reading data from two locations occurs eight times successively. Mismatch between writing data and reading data occurs eight times successively.	Defective connector cable or poor contact in the connector.	Reinsert the connector. Also check for continuity within the connector cable. If none, replace the cable. Main PWB (YC105) and engine PWB (YC17)
		Defective PWB.	Replace the main PWB or the engine PWB and check for correct operation (see page 1-5-33, 1-5-35).
4950	**LSU CPU communication error** A communication error is detected 10 times in succession.	Defective connector cable or poor contact in the connector.	Reinsert the connector. Also check for continuity within the connector cable. If none, replace the cable. Main PWB and video PWB (YC1) video PWB and LSU connect PWB (YC10)
		Defective PWB.	Replace the main PWB or video PWB and check for correct operation (see page 1-5-33, 1-5-39).

Code	Contents	Causes	Check procedures/ corrective measures
6000	**Broken fuser heater wire** Fuser thermistor 2 does not reach 80° C/176 °F even after20 s during warming up. The detected temperature of fuser thermistor2 does not reach the specified temperature (ready indication temperature) for 200 s in warming up after reached to 80° C/176 °F.	Defective connector cable or poor contact in the connector.	Reinsert the connector. Also check for continuity within the connector cable. If none, replace the cable. IH coil unit and IHPWB IHPWB and engine PWB (YC7)
		Deformed connector pin.	If the I/F connector pins of the fuser unit and the main unit are deformed owing to foreign matters, such as paper dusts, replace the connectors or the units including the connectors.
		Fuser thermostat triggered.	Reinsert the fuser unit (see page 1-5-18).
		Broken fuser heater wire.	
		Defective PWB.	Replace the IH PWB or the engine PWB and check for correct operation (see page 1-5-43, 1-5-35).
6020	**Abnormally high fuser thermistor 2 (center) temperature** The fuser thermistor 2 detects a temperature higher than 240°C/464°F continuously for 1 s.	Deformed connector pin.	If the I/F connector pins of the fuser unit and the main unit are deformed owing to foreign matters, such as paper dusts, replace the connectors or the units including the connectors.
		Shorted fuser thermistor.	Replace the fuser unit (see page 1-5-18).
		Defective PWB.	Replace the engine PWB and check for correct operation (see page 1-5-35).
6030	**Fuser thermistor 2 (center) break error** A/D value of the fuser thermistor 2 exceeds 1010 bit continuously for 1 s during warming up.	Defective connector cable or poor contact in the connector.	Reinsert the connector. Also check for continuity within the connector cable. If none, replace the cable. Fuser thermister2 and fuser PWB (YC2) Fuser unit and engine PWB (YC22)
		Deformed connector pin.	If the I/F connector pins of the fuser unit and the main unit are deformed owing to foreign matters, such as paper dusts, replace the connectors or the units including the connectors.
		Defective fuser thermistor.	Replace the fuser unit (see page 1-5-18).
		Defective PWB.	Replace the engine PWB and check for correct operation (see page 1-5-35).

Code	Contents	Causes	Check procedures/ corrective measures
6040	**NC sensor error**	Deformed connector pin.	If the I/F connector pins of the fuser unit and the main unit are deformed owing to foreign matters, such as paper dusts, replace the connectors or the units including the connectors.
		Shorted fuser thermistor.	Replace the fuser unit (see page 1-5-18).
		Defective PWB.	Replace the engine PWB and check for correct operation (see page 1-5-35).
6050	**Abnormally low fuser thermistor 2 (center) temperature** The fuser temperature lower than 100 °C/212 °F is detected continuously for 1 s during printing.	Deformed connector pin.	If the I/F connector pins of the fuser unit and the main unit are deformed owing to foreign matters, such as paper dusts, replace the connectors or the units including the connectors.
		Defective fuser thermistor.	Replace the fuser unit (see page 1-5-18).
		Defective fuser heater.	
		Defective PWB.	Replace the engine PWB and check for correct operation (see page 1-5-35).
6120	**Abnormally high fuser thermistor 3 (press roller) temperature** The fuser temperature exceeds 200 °C/392 °F for 1 s.	Deformed connector pin.	If the I/F connector pins of the fuser unit and the main unit are deformed owing to foreign matters, such as paper dusts, replace the connectors or the units including the connectors.
		Defective fuser thermistor.	Replace the fuser unit (see page 1-5-18).
		Defective PWB.	Replace the IH PWB or the engine PWB and check for correct operation (see page 1-5-43, 1-5-35).
6130	**Fuser thermistor 3 (press roller) break error** Fuser thermistor 3 detects a temperature of -14 °C/6.8 °F . Fuser thermistor 3 does not reach 30° C/86 °F even after60 s during warming up.	Defective connector cable or poor contact in the connector.	Reinsert the connector. Also check for continuity within the connector cable. If none, replace the cable. Fuser thermistor 3 and fuser PWB (YC4) Fuser unit and engine PWB (YC22)
		Deformed connector pin.	If the I/F connector pins of the fuser unit and the main unit are deformed owing to foreign matters, such as paper dusts, replace the connectors or the units including the connectors.
		Defective fuser thermistor.	Replace the fuser unit (see page 1-5-18).
		Defective PWB.	Replace the IH PWB or the engine PWB and check for correct operation (see page 1-5-43, 1-5-35).

Code	Contents	Causes	Check procedures/ corrective measures
6150	**Abnormally low fuser thermistor 3 (press roller) temperature** The fuser temperature lower than 30 °C/86 °F is detected continuously for 1 s.	Deformed connector pin.	If the I/F connector pins of the fuser unit and the main unit are deformed owing to foreign matters, such as paper dusts, replace the connectors or the units including the connectors.
		Defective fuser thermistor.	Replace the fuser unit (see page 1-5-18).
		Defective fuser heater.	
		Defective PWB.	Replace the engine PWB and check for correct operation (see page 1-5-35).
6200	**Broken fuser edge heater wire** Fuser thermistor 1 does not reach 50° C/122 °F even after20 s during warming up. The detected temperature of fuser thermistor1 does not reach the specified temperature (ready indication temperature) for 60 s in warming up after reaching 50° C/122 °F.	Defective connector cable or poor contact in the connector.	Reinsert the connector. Also check for continuity within the connector cable. If none, replace the cable. IH coil unit and IHPWB IHPWB and engine PWB (YC7)
		Deformed connector pin.	If the I/F connector pins of the fuser unit and the main unit are deformed owing to foreign matters, such as paper dusts, replace the connectors or the units including the connectors.
		Fuser thermostat triggered.	Reinsert the fuser unit (see page 1-5-18).
		Broken fuser heater wire.	
		Defective PWB.	Replace the IH PWB or the engine PWB and check for correct operation (see page 1-5-43, 1-5-35).
6220	**Abnormally high fuser thermistor 1 (edge) temperature** The fuser temperature exceeds 240 °C/464 °F for 1 s.	Deformed connector pin.	If the I/F connector pins of the fuser unit and the main unit are deformed owing to foreign matters, such as paper dusts, replace the connectors or the units including the connectors.
		Defective cooling fan motor.	Replace the fuser fan motor.
		Defective fuser thermistor.	Replace the fuser unit (see page 1-5-18).
		Defective PWB.	Replace the engine PWB and check for correct operation (see page 1-5-35).

Code	Contents	Causes	Check procedures/ corrective measures
6230	**Fuser thermistor 1 (edge) break error** During warming up a hearter, fuser thermistor 2 detects a temperature of 100 °C/212 °F or higher and, fuser thermistor 1 detects a temperature of 37 °C/99 °F or lower.	Defective connector cable or poor contact in the connector.	Reinsert the connector. Also check for continuity within the connector cable. If none, replace the cable. Fuser thermistor 1 and fuser PWB (YC3) Fuser unit and engine PWB (YC22)
		Deformed connector pin.	If the I/F connector pins of the fuser unit and the main unit are deformed owing to foreign matters, such as paper dusts, replace the connectors or the units including the connectors.
		Defective fuser thermistor.	Replace the fuser unit (see page 1-5-18).
		Defective PWB.	Replace the engine PWB and check for correct operation (see page 1-5-35).
6250	**Abnormally low fuser thermistor 1 (edge) temperature** The fuser temperature lower than 80 °C/176 °F is detected continuously for 1 s during printing.	Deformed connector pin.	If the I/F connector pins of the fuser unit and the main unit are deformed owing to foreign matters, such as paper dusts, replace the connectors or the units including the connectors.
		Defective fuser thermistor.	Replace the fuser unit (see page 1-5-18).
		Defective fuser heater.	
		Defective PWB.	Replace the IH PWB or the engine PWB and check for correct operation (see page 1-5-43, 1-5-35).
6410	**Fuser unit type mismatch problem** Absence of the fuser unit is detected.	Fuser unit connector inserted incorrectly.	Reinsert the fuser unit connector if necessary.
		Different type of the fuser unit is installed.	Install the correct fuser unit (see page 1-5-18).
6600	**Belt rotation error** The belt was detected to stop for 2 s continuously during motor remote is on.	Defective fuser motor.	Replace the fuser motor.
		Defective IH belt.	Replace the fuser unit (see page 1-5-18).
		Defective IH PWB.	Replace the IH PWB and check for correct operation (see page 1-5-43).
		Defective PWB.	Replace the engine PWB and check for correct operation (see page 1-5-35).
6710	**CPU thermal runaway (IHPWB)**	Defective PWB.	Replace the IH PWB and check for correct operation (see page 1-5-43).

Code	Contents	Causes	Check procedures/ corrective measures
6720	**Belt rotation error (IHPWB)**	Defective PWB.	Replace the IH PWB and check for correct operation (see page 1-5-43).
		Defective fuser motor.	Replace the fuser motor.
		Defective fuser unit.	Replace the fuser unit (see page 1-5-18).
6730	**Abnormally high IGBT1 temperature (IHPWB)**	Defective PWB.	Replace the IH PWB and check for correct operation (see page 1-5-43).
		Defective cooling fan motor.	Replace the IH fan motor.
6740	**Abnormally high IGBT2 temperature (IHPWB)**	Defective PWB.	Replace the IH PWB and check for correct operation (see page 1-5-43).
		Defective cooling fan motor.	Replace the IH fan motor.
6750	**Abnormally output overcurrent (IHPWB)**	Defective PWB.	Replace the IH PWB and check for correct operation (see page 1-5-43).
		Defective fuser unit.	Replace the fuser unit (see page 1-5-18).
6760	**Abnormally AC input overcurrent (IHPWB)**	Defective PWB.	Replace the IH PWB and check for correct operation (see page 1-5-43).
6770	**Abnormally low electric power (IHPWB)**	Defective connector cable or poor contact in the connector.	Reinsert the connector. Also check for continuity within the connector cable. If none, replace the cable.
		Defective PWB.	Replace the IH PWB and check for correct operation (see page 1-5-43).
6930	**IH coil fan motor error** The alarm signal was detected for 5 seconds continuously during operation.	Defective connector cable or poor contact in the connector.	Reinsert the connector. Also check for continuity within the connector cable. If none, replace the cable. IH coil fan motor and engine PWB(YC21)
		Defective cooling fan motor.	Replace the container fan motor.
		Defective PWB.	Replace the engine PWB and check for correct operation (see page 1-5-35).
6950	**IH CPU communication error** **A communication error is detected 3 times in succession.**	Defective connector cable or poor contact in the connector.	Reinsert the connector. Also check for continuity within the connector cable. If none, replace the cable.
		Defective PWB.	Replace the IH PWB or the engine PWB and check for correct operation (see page 1-5-43, 1-5-35).

Code	Contents	Causes	Check procedures/ corrective measures
6990	**Fuser unit type mismatch problem** Absence of the fuser unit is detected.	Defective PWB.	Replace the IH PWB and check for correct operation (see page 1-5-43).
7101	**Toner sensor K error** The sensor outputs are for 5 seconds, 23 or less, or 248 or more.	Defective Developer unit.	Replace the developer unit K (see page 1-5-14).
		Defective PWB.	Replace the engine PWB check for correct operation (see page 1-5-35).
7102	**Toner sensor C error** The sensor outputs are for 5 seconds, 23 or less, or 248 or more.	Defective Developer unit.	Replace the developer unit C (see page 1-5-14).
		Defective PWB.	Replace the engine PWB check for correct operation (see page 1-5-35).
7103	**Toner sensor M error** The sensor outputs are for 5 seconds, 23 or less, or 248 or more.	Defective Developer unit.	Replace the developer unit M (see page 1-5-14).
		Defective PWB.	Replace the engine PWB check for correct operation (see page 1-5-35).
7104	**Toner sensor Y error** The sensor outputs are for 5 seconds, 23 or less, or 248 or more.	Defective Developer unit.	Replace the developer unit Y (see page 1-5-14).
		Defective PWB.	Replace the engine PWB check for correct operation (see page 1-5-35).
7401	**Developer unit K type mismatch error** Absence of the developer unit K is detected.	Defective connector cable or poor contact in the connector.	Reinsert the connector. Also check for continuity within the connector cable. If none, replace the cable. Developer unit K and drum connect PWB (YC9) Drum connect PWB and engine PWB (YC4)
		Different type of the developer unit is installed.	Install the correct developer unit (see page 1-5-14).

Code	Contents	Causes	Check procedures/ corrective measures
7402	**Developer unit C type mismatch error** Absence of the developer unit C is detected.	Defective connector cable or poor contact in the connector.	Reinsert the connector. Also check for continuity within the connector cable. If none, replace the cable. Developer unit C and drum connect PWB (YC7) Drum connect PWB and engine PWB (YC4)
		Different type of the developer unit is installed.	Install the correct developer unit (see page 1-5-14).
7403	**Developer unit M type mismatch error** Absence of the developer unit M is detected.	Defective connector cable or poor contact in the connector.	Reinsert the connector. Also check for continuity within the connector cable. If none, replace the cable. Developer unit M and drum connect PWB (YC8) Drum connect PWB and engine PWB (YC4)
		Different type of the developer unit is installed.	Install the correct developer unit (see page 1-5-14).
7404	**Developer unit Y type mismatch error** Absence of the developer unit Y is detected.	Defective connector cable or poor contact in the connector.	Reinsert the connector. Also check for continuity within the connector cable. If none, replace the cable. Developer unit Y and drum connect PWB (YC6) Drum connect PWB and engine PWB (YC4)
		Different type of the developer unit is installed.	Install the correct developer unit (see page 1-5-14).
7411	**Drum unit K type mismatch problem** Absence of the drum unit K is detected.	Drum unit connector inserted incorrectly.	Reinsert the drum unit K connector if necessary.
		Different type of the drum unit is installed.	Install the correct drum unit (see page 1-5-16).
7412	**Drum unit C type mismatch problem** Absence of the drum unit C is detected.	Drum unit connector inserted incorrectly.	Reinsert the drum unit C connector if necessary.
		Different type of the drum unit is installed.	Install the correct drum unit (see page 1-5-16).
7413	**Drum unit M type mismatch problem** Absence of the drum unit M is detected.	Drum unit connector inserted incorrectly.	Reinsert the drum unit M connector if necessary.
		Different type of the drum unit is installed.	Install the correct drum unit (see page 1-5-16).

Code	Contents	Causes	Check procedures/ corrective measures
7414	**Drum unit Y type mismatch problem** Absence of the drum unit Y is detected.	Drum unit connector inserted incorrectly.	Reinsert the drum unit Y connector if necessary.
		Different type of the drum unit is installed.	Install the correct drum unit (see page 1-5-16).
7420	**Transfer belt unit type mismatch problem** Absence of the transfer belt unit is detected.	Transfer belt unit connector inserted incorrectly.	Reinsert the transfer belt unit connector if necessary.
		Different type of the transfer belt unit is installed.	Install the correct transfer belt unit (see page 1-5-17).
7601	**ID sensor 1 (front) error**	Defective ID sensor.	Replace the ID sensor 1.
		Defective PWB.	Replace the engine PWB check for correct operation (see page 1-5-35).
7602	**ID sensor 2 (rear) error**	Defective ID sensor.	Replace the ID sensor 2.
		Defective PWB.	Replace the engine PWB check for correct operation (see page 1-5-35).
7611	**ID sensor (K) density error** When the concentration in a bias calibration is unusual.	Defective ID sensor.	Replace the ID sensor.
		Defective PWB.	Replace the engine PWB check for correct operation (see page 1-5-35).
7612	**ID sensor (C) density error** When the concentration in a bias calibration is unusual.	Defective ID sensor.	Replace the ID sensor.
		Defective PWB.	Replace the engine PWB check for correct operation (see page 1-5-35).
7613	**ID sensor (M) density error** When the concentration in a bias calibration is unusual.	Defective ID sensor.	Replace the ID sensor.
		Defective PWB.	Replace the engine PWB check for correct operation (see page 1-5-35).
7614	**ID sensor (Y) density error** When the concentration in a bias calibration is unusual.	Defective ID sensor.	Replace the ID sensor.
		Defective PWB.	Replace the engine PWB check for correct operation (see page 1-5-35).
7620	**ID sensor timing error** Color registration correction was failed.	Defective ID sensor.	Replace the ID sensor.
		Defective PWB.	Replace the engine PWB check for correct operation (see page 1-5-35).

Code	Contents	Causes	Check procedures/ corrective measures
7800	**Broken external thermistor wire** The external thermistor delivers 0.3V or more.	Defective connector cable or poor contact in the connector.	Reinsert the connector. Also check for continuity within the connector cable. If none, replace the cable. Temperature sensor and engine PWB (YC29)
		Defective temperature sensor.	Replace the temperature sensor.
		Defective PWB.	Replace the engine PWB check for correct operation (see page 1-5-35).
7810	**Short-circuited external thermistor wire** external thermistor delivers 3V or more.	Defective connector cable or poor contact in the connector.	Reinsert the connector. Also check for continuity within the connector cable. If none, replace the cable. Temperature sensor and engine PWB (YC29)
		Defective temperature sensor.	Replace the temperature sensor.
		Defective PWB.	Replace the engine PWB check for correct operation (see page 1-5-35).
7901	**Drum unit K EEPROM error** No response is issued from the device in reading/writing for 5 ms or more and this problem is repeated five times successively. Mismatch of reading data from two locations occurs eight times successively. Mismatch between writing data and reading data occurs eight times successively.	Poor contact in the connector terminals.	Reinsert the connector. Also check for continuity within the connector cable. If none, replace the cable. Drum unit (K) and drum connect PWB(YC5) drum connect PWB and engine connect PWB (YC4) Engine connect PWB and engine PWB (YC9)
		Defective drum PWB.	Replace the drum unit K (see 1-5-16).
		Defective PWB.	Replace the engine PWB check for correct operation (see page 1-5-35).
7902	**Drum unit C EEPROM error** No response is issued from the device in reading/writing for 5 ms or more and this problem is repeated five times successively. Mismatch of reading data from two locations occurs eight times successively. Mismatch between writing data and reading data occurs eight times successively.	Poor contact in the connector terminals.	Reinsert the connector. Also check for continuity within the connector cable. If none, replace the cable. Drum unit (C) and drum connect PWB(YC3) drum connect PWB and engine connect PWB (YC4) Engine connect PWB and engine PWB (YC9)
		Defective drum PWB.	Replace the drum unit C (see 1-5-16).
		Defective PWB.	Replace the engine PWB check for correct operation (see page 1-5-35).

Code	Contents	Causes	Check procedures/ corrective measures
7903	**Drum unit M EEPROM error** No response is issued from the device in reading/writing for 5 ms or more and this problem is repeated five times successively. Mismatch of reading data from two locations occurs eight times successively. Mismatch between writing data and reading data occurs eight times successively.	Poor contact in the connector terminals.	Reinsert the connector. Also check for continuity within the connector cable. If none, replace the cable. Drum unit (M) and drum connect PWB(YC4) drum connect PWB and engine connect PWB (YC4) Engine connect PWB and engine PWB (YC9)
		Defective drum PWB.	Replace the drum unit M (see 1-5-16).
		Defective PWB.	Replace the engine PWB check for correct operation (see page 1-5-35).
7904	**Drum unit Y EEPROM error** No response is issued from the device in reading/writing for 5 ms or more and this problem is repeated five times successively. Mismatch of reading data from two locations occurs eight times successively. Mismatch between writing data and reading data occurs eight times successively.	Poor contact in the connector terminals.	Reinsert the connector. Also check for continuity within the connector cable. If none, replace the cable. Drum unit (Y) and drum connect PWB(YC2) drum connect PWB and engine connect PWB (YC4) Engine connect PWB and engine PWB (YC9)
		Defective drum PWB.	Replace the drum unit Y (see 1-5-16).
		Defective PWB.	Replace the engine PWB check for correct operation (see page 1-5-35).
7911	**Developer unit K EEPROM error** No response is issued from the device in reading/writing for 5 ms or more and this problem is repeated five times successively. Mismatch of reading data from two locations occurs eight times successively. Mismatch between writing data and reading data occurs eight times successively.	Poor contact in the connector terminals.	Reinsert the connector. Also check for continuity within the connector cable. If none, replace the cable. Developer unit (K) and drum connect PWB(YC9) drum connect PWB and engine connect PWB (YC4) Engine connect PWB and engine PWB (YC12)
		Defective developer PWB.	Replace the developer unit K (see 1-5-14).
		Defective PWB.	Replace the engine PWB check for correct operation (see page 1-5-35).

Code	Contents	Causes	Check procedures/ corrective measures
7912	**Developer unit C EEPROM error** No response is issued from the device in reading/writing for 5 ms or more and this problem is repeated five times successively. Mismatch of reading data from two locations occurs eight times successively. Mismatch between writing data and reading data occurs eight times successively.	Poor contact in the connector terminals.	Reinsert the connector. Also check for continuity within the connector cable. If none, replace the cable. Developer unit (C) and drum connect PWB(YC7) drum connect PWB and engine connect PWB (YC4) Engine connect PWB and engine PWB (YC12)
		Defective developer PWB.	Replace the developer unit C (see 1-5-14).
		Defective PWB.	Replace the engine PWB check for correct operation (see page 1-5-35).
7913	**Developer unit M EEPROM error** No response is issued from the device in reading/writing for 5 ms or more and this problem is repeated five times successively. Mismatch of reading data from two locations occurs eight times successively. Mismatch between writing data and reading data occurs eight times successively.	Poor contact in the connector terminals.	Reinsert the connector. Also check for continuity within the connector cable. If none, replace the cable. Developer unit (M) and drum connect PWB(YC8) drum connect PWB and engine connect PWB (YC4) Engine connect PWB and engine PWB (YC12)
		Defective developer PWB.	Replace the developer unit M (see 1-5-14).
		Defective PWB.	Replace the engine PWB check for correct operation (see page 1-5-35).
7914	**Developer unit Y EEPROM error** No response is issued from the device in reading/writing for 5 ms or more and this problem is repeated five times successively. Mismatch of reading data from two locations occurs eight times successively. Mismatch between writing data and reading data occurs eight times successively.	Poor contact in the connector terminals.	Reinsert the connector. Also check for continuity within the connector cable. If none, replace the cable. Developer unit (Y) and drum connect PWB(YC6) drum connect PWB and engine connect PWB (YC4) Engine connect PWB and engine PWB (YC12)
		Defective developer PWB.	Replace the developer unit Y (see 1-5-14).
		Defective PWB.	Replace the engine PWB check for correct operation (see page 1-5-35).

Code	Contents	Causes	Check procedures/ corrective measures
8030	**Tray upper limit detection problem (document finisher)** When the tray elevation motor raises a tray, the ON status of the tray upper limit sensor is detected.	Defective connector cable or poor contact in the connector.	Reinsert the connector. Also check for continuity within the connector cable. If none, replace the cable. Tray upper limit sensor and DF main PWB (CN5) Paper surface sensor 1/2 and DF main PWB (CN6)
		Defective tray upper limit sensor, paper surface sensor 1/2.	Replace the sensor.
		Defective PWB.	Replace the DF main PWB and check for correct operation.
8040	**Belt problem (document finisher)** The belt sensor does not turn on/off within specified time of the belt solenoid turning on.	Defective connector cable or poor contact in the connector.	Reinsert the connector. Also check for continuity within the connector cable. If none, replace the cable. Belt sensor and DF main PWB (CN10) Belt solenoid and DF main PWB (CN21)
		Defective belt sensor.	Replace the belt sensor.
		Defective belt solenoid.	Replace the belt solenoid.
		Defective PWB.	Replace the DF main PWB and check for correct operation.
8140	**Tray elevation motor problem (document finisher)** The tray low limit sensor or paper surface sensor 1/2 cannot be detected to be on within 10 s since the tray elevation motor is activated.	Defective connector cable or poor contact in the connector.	Reinsert the connector. Also check for continuity within the connector cable. If none, replace the cable. Tray elevation motor and DF main PWB (CN15)
		Defective connector cable or poor contact in the connector.	Reinsert the connector. Also check for continuity within the connector cable. If none, replace the cable. Tray lower limit sensor, and DF main PWB (CN5) Paper surface sensor 1/2 and DF main PWB (CN6)
		The tray elevation motor malfunctions.	Replace the tray elevation motor.
		Defective tray lower limit sensor, paper surface sensor 1/2.	Replace the sensor.
		Defective PWB.	Replace the DF main PWB and check for correct operation.

Code	Contents	Causes	Check procedures/ corrective measures
8210	**Stapler problem (document finisher)** Jam 7013 or 7023 is indicated.	Defective connector cable of staple or poor contact in the connector.	Reinsert the connector. Also check for continuity within the connector cable. If none, replace the cable.
		The stapler is blocked with a staple.	Remove the stapler cartridge, and check the cartridge and the stapling section of the stapler.
		The stapler is broken.	Replace the stapler and check for correct operation.
		Defective PWB.	Replace the DF main PWB and check for correct operation.
8320	**Adjustment motor 2 problem (document finisher)** The adjustment sensor 2 does not turn on/off within specified time of the adjustment motor 2 turning on.	Defective connector cable or poor contact in the connector.	Reinsert the connector. Also check for continuity within the connector cable. If none, replace the cable. Adjustment motor 2 and DF main PWB (CN18) Adjustment sensor 2 and DF main PWB (CN7)
		Defective adjustment sensor 2.	Replace the adjustment sensor 2.
		Defective adjustment motor 2.	Replace the adjustment motor 2.
		Defective PWB.	Replace the DF main PWB and check for correct operation.
8330	**Adjustment motor 1 problem (document finisher)** The adjustment sensor 1 does not turn on/off within specified time of the adjustment motor 1 turning on.	Defective connector cable or poor contact in the connector.	Reinsert the connector. Also check for continuity within the connector cable. If none, replace the cable. Adjustment motor 1 and DF main PWB (CN18) Adjustment sensor 1 and DF main PWB (CN7)
		Defective adjustment sensor 1.	Replace the adjustment sensor 1.
		Defective adjustment motor 1.	Replace the adjustment motor 1.
		Defective PWB.	Replace the DF main PWB and check for correct operation.

Code	Contents	Causes	Check procedures/ corrective measures
8350	**Roller motor problem (document finisher)** The roller sensor does not turn on/off within specified time of the roller motor turning on.	Defective connector cable or poor contact in the connector.	Reinsert the connector. Also check for continuity within the connector cable. If none, replace the cable. Roller motor and DF main PWB (CN20) Roller sensor and DF main PWB (CN11)
		Defective roller sensor.	Replace the roller sensor.
		Defective roller motor.	Replace the roller motor.
		Defective PWB.	Replace the DF main PWB and check for correct operation.
8360	**Slide motor problem (document finisher)** The slide sensor does not turn on/off within specified time of the slide motor turning on.	Defective connector cable or poor contact in the connector.	Reinsert the connector. Also check for continuity within the connector cable. If none, replace the cable. Slide motor and DF main PWB (CN14) Slide sensor and DF main PWB (CN22)
		Defective slide sensor.	Replace the slide sensor.
		Defective slide motor.	Replace the slide motor.
		Defective PWB.	Replace the DF main PWB and check for correct operation.
8460	**EEPROM problem (document finisher)** Reading from or writing to EEPROM cannot be performed.	Defective EEPROM or DF main PWB.	Replace the DF main PWB and check for correct operation.
8800	**Document finisher communication error** A communication error is detected 10 times in succession.	Defective connector cable or poor contact in the connector.	Reinsert the connector. Also check for continuity within the connector cable. If none, replace the cable. Engine PWB (YC9) and Engine connect PWB (YC1) Engine connect PWB (YC7) and DF relay PWB (YC2) DF relay PWB (YC3) and DF main PWB (CN1)
		Defective DF main PWB.	Replace the DF main PWB and check for correct operation.
		Defective PWB.	Replace the engine PWB and check for correct operation (see page 1-5-35).

Code	Contents	Causes	Check procedures/ corrective measures
8830	**Bridge communication error (document finisher)** A communication error is detected 10 times in succession.	Defective connector cable or poor contact in the connector.	Reinsert the connector. Also check for continuity within the connector cable. If none, replace the cable. Engine PWB (YC9) and Engine connect PWB (YC1) Engine connect PWB (YC7) and DF relay PWB (YC2) DF relay PWB (YC4) and bridge PWB (YC5)
		Defective PWB.	Replace the bridge PWB or the engine PWB and check for correct operation (see page 1-5-35).
8990	**Backup memory data problem (document finisher)** Read and write data does not match 3 times in succession.	Defective connector cable or poor contact in the connector.	Check the connection of connector on the finisher main PWB and the connector of the machine, and the continuity across the connector terminals. Repair or replace if necessary.
		EEPROM installed incorrectly.	Install EEPROM correctly.
		Defective finisher main PWB.	Replace the finisher main PWB and check for correct operation.
9000	**Document processor communication error** A communication error is detected 10 times in succession.	Defective connector cable or poor contact in the connector.	Reinsert the connector. Also check for continuity within the connector cable. If none, replace the cable. DP main PWB and ISC PWB (YC12)
		Defective PWB.	Replace the DP main PWB or the ISC PWB and check for correct operation (see page 1-5-31).
9010	**Coin vender communication error** A communication error from coin vender is detected 10 times in succession.	Defective connector cable or poor contact in the connector.	Reinsert the connector. Also check for continuity within the connector cable. If none, replace the cable.
		Data setup failure.	Set maintenance mode U206 to off when a coin vender is not installed.
		Defective coin vender control PWB.	Replace the coin vender control PWB.
		Defective PWB.	Replace the video PWB and check for correct operation (see page 1-5-39).
9060	**DP EEPROM error** Mismatch between writing data and reading data occurs three times successively. Mismatch of reading data from two locations occurs three times successively.	Defective PWB.	Replace the DP main PWB and check for correct operation (see page 1-5-31).
		Device damage of EEPROM.	Contact the Service Administrative Division.

Code	Contents	Causes	Check procedures/ corrective measures
9100	**Coin vender control PWB error** Communication error has been detected at the coin mec of the coin vender control PWB.	Defective coin vender control PWB.	Replace the coin mec.
9110	**Coin vender error** Communication error has been detected in connection with the coin mec and the rejector.	Rejector installed incorrectly.	Check the rejector is properly installed and, if not, perform the corrective action.
		Defective rejector.	Replace the rejector.
9120	**Sensor error in coin vender change (Yen 10)** Change is empty despite change is enough.	Coin jam in the change tube	Check visually and remedy.
		Poor contact in the connector.	Check if the change empty sensor is intact.
		Defective change empty sensor.	Replace the coin mec.
		Defective coin vender control PWB.	
9130	**Sensor error in coin vender change (Yen 50)** Change is empty despite change is enough.	Coin jam in the change tube	Check visually and remedy.
		Poor contact in the connector.	Check if the change empty sensor is intact.
		Defective change empty sensor.	Replace the coin mec.
		Defective coin vender control PWB.	
9140	**Sensor error in coin vender change (Yen 100)** Change is empty despite change is enough.	Coin jam in the change tube	Check visually and remedy.
		Poor contact in the connector.	Check if the change empty sensor is intact.
		Defective change empty sensor.	Replace the coin mec.
		Defective coin vender control PWB.	

Code	Contents	Causes	Check procedures/ corrective measures
9150	**Sensor error in coin vender change (Yen 500)** Change is empty despite change is enough.	Coin jam in the change tube	Check visually and remedy.
		Poor contact in the connector.	Check if the change empty sensor is intact.
		Defective change empty sensor.	Replace the coin mec.
		Defective coin vender control PWB.	
9160	**Coin vender pay-out error** Coin is paid out despite the pay-out motor is determined not active.	Defective pay-out motor.	Replace the coin mec.
9170	**Coin vender pay-out sensor error** Coin is paid out despite the pay-out motor is determined not active.	Change jam at the pay-out.	Check visually and remedy.
		Defective pay-out motor.	Replace the coin mec.
		Defective pay-out sensor.	
9500			Contact the Service Administrative Division.
9510			
9520			
9530			Contact the Service Administrative Division.
9540			
9550			
F000	**Main PWB - operation panel PWB communication error**	Defective main PWB.	Turn the main power switch off/on to restart the machine. If the error is not resolved, replace main PWB (see page 1-5-33).
		Defective opera-tion panel PWB.	Replace the operation panel PWB and check for correct operation.
F010	**Main PWB checksum error**	Defective main PWB.	Turn the main power switch off/on to restart the machine. If the error is not resolved, replace main PWB (see page 1-5-33).
F011			
F012			
F013			
F040	**Main PWB - print engine communication error**	Defective main PWB.	Turn the main power switch off/on to restart the machine. If the error is not resolved, replace main PWB (see page 1-5-33).
		Defective engine PWB.	Replace the engine PWB and check for cor-rect operation (see page 1-5-35).

Code	Contents	Causes	Check procedures/ corrective measures
F041	**Communication error between main PWB and scanner engine**	Defective main PWB.	Turn the main power switch off/on to restart the machine. If the error is not resolved, replace main PWB (see page 1-5-33).
		Defective ISC PWB.	Replace the ISC PWB and check for correct operation.
F050	**Print engine ROM check-sum error**	Defective engine PWB.	Turn the main power switch off/on to restart the machine. If the error is not resolved, replace engine PWB (see page 1-5-35).
F051	**Scanner engine ROM checksum error**	Defective Scanner software.	Install the Scanner software.
		Defective ISC PWB.	Turn the main power switch off/on to restart the machine. If the error is not resolved, replace ISC PWB.

NOTE:
The other F codes are indicated to the appendix (see page 2-4-10).

1-4-3 Image quality problems

If the part causing the problem is not designated as a service part, replace with the assembly comprising the part.

(1) No image appears (entirely white).

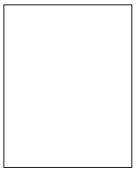

See page 1-4-44

(2) No image appears (entirely black).

See page 1-4-44

(3) Image is too light.

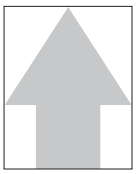

See page 1-4-45

(4) The background is colored.

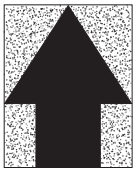

See page 1-4-45

(5) White streaks are printed vertically.

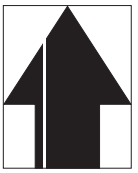

See page 1-4-45

(6) Black streaks are printed vertically.

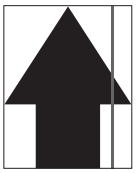

See page 1-4-46

(7) Streaks are printed horizontally.

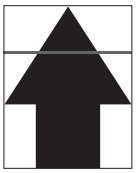

See page 1-4-46

(8) One side of the print image is darker than the other.

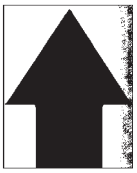

See page 1-4-46

(9) Spots are printed.

See page 1-4-47

(10) Image is blurred.

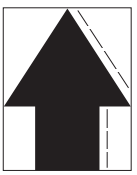

See page 1-4-47

(11) The leading edge of the image is consistently misaligned with the original.

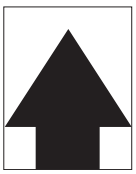

See page 1-4-47

(12) The leading edge of the image is sporadically misaligned with the original.

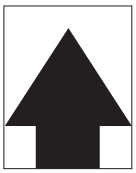

See page 1-4-47

(13) Paper is wrinkled.

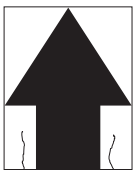

See page 1-4-48

(14) Offset occurs.

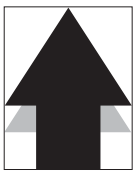

See page 1-4-48

(15) Part of image is missing.

See page 1-4-48

(16) Fusing is loose.

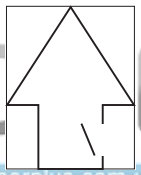

See page 1-4-48

(17) Image is out of focus.

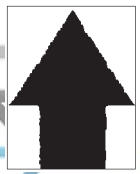

See page 1-4-49

(18) Image center does not align with the original center.

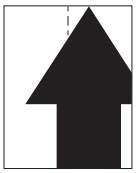

See page 1-4-49

(1) No image appears (entirely white).

Print example	Causes		Check procedures/corrective measures
	Defective transfer bias output.	Defective connector cable or poor contact in the connector.	Reinsert the connector. Also check for continuity of the connector cable. If necessary, replace the cable. High voltage PWB and engine PWB (YC15) High voltage PWB sub and engine PWB (YC13)
		Defective high voltage PWB.	Replace the high voltage PWB.
		Defective high voltage PWB sub.	Replace the high voltage PWB sub.
		Defective engine PWB.	Replace the engine PWB (see page 1-5-35).
	Defective developer bias output.	Defective connector cable or poor contact in the connector.	Reinsert the connector. Also check for continuity of the connector cable. If necessary, replace the cable. High voltage PWB and engine PWB (YC15)
		Defective high voltage PWB.	Replace the high voltage PWB.
		Defective engine PWB.	Replace the engine PWB (see page 1-5-35).
	No LSU laser is output.	Defective laser scanner unit.	Replace the laser scanner unit (see page 1-5-21).
		Defective main PWB.	Replace the main PWB (see page 1-5-33).

(2) No image appears (entirely black).

Print example	Causes		Check procedures/corrective measures
	No main charging.	Defective connector cable or poor contact in the connector.	Reinsert the connector. Also check for continuity within the connector cable. If none, replace the cable. High voltage PWB and engine PWB (YC15)
		Defective charger roller unit.	Replace the charger roller unit (see page 1-5-16).
		Defective high voltage PWB.	Replace the high voltage PWB.
		Defective engine PWB.	Replace the engine PWB (see page 1-5-35).

(3) Image is too light.

Print example	Causes		Check procedures/corrective measures
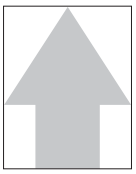	Defective transfer charger output.	Defective connector cable or poor contact in the connector.	Reinsert the connector. Also check for continuity within the connector cable. If none, replace the cable. High voltage PWB and engine PWB (YC15) High voltage PWB sub and engine PWB (YC13)
		Defective high voltage PWB.	Replace the high voltage PWB.
		Defective high voltage PWB sub.	Replace the high voltage PWB sub.
		Defective engine PWB.	Replace the engine PWB (see page 1-5-35).
	Insufficient toner.		If the display shows the message requesting toner replenishment, replace the container.
	Deteriorated toner.		Perform the drum refresh operation.

(4) The background is colored.

Print example	Causes		Check procedures/corrective measures
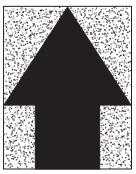	Defective main charger output.	Defective connector cable or poor contact in the connector.	Reinsert the connector. Also check for continuity within the connector cable. If none, replace the cable. High voltage PWB and engine PWB (YC15)
		Defective high voltage PWB.	Replace the high voltage PWB.
		Defective engine PWB.	Replace the engine PWB (see page 1-5-35).
	Deteriorated toner.		Perform the drum refresh operation.

(5) White streaks are printed vertically.

Print example	Causes	Check procedures/corrective measures
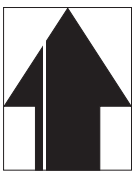	Foreign matter in the developer unit.	Check if the magnetic brush is formed uniformly. Replace the developer unit if any foreign matter (see page 1-5-14).
	Dirty shading plate.	Clean the shading plate.
	Adhesion of soiling to transfer belt.	Clean the transfer belt. Replace the intermadiate transfer unit if it is extremely dirty (see page 1-5-17).
	Adhesion of soiling to transfer roller.	Clean the transfer roller. Replace the transfer roller unit if it is extremely dirty (see page 1-5-17).
	Dirty LSU dust shield glass.	Perform the LSU dust shield glass cleaning.

(6) Black streaks are printed vertically.

Print example	Causes	Check procedures/corrective measures
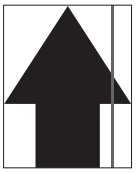	Dirty contact glass.	Clean the contact glass.
	Dirty slit glass.	Clean the slit glass.
	Dirty or flawed drum.	Perform the drum refresh operation. Flawed drum. Replace the drum unit (see page 1-5-16).
	Deformed or worn cleaning blade in the drum unit.	Replace the drum unit (see page 1-5-16).
	Defective transfer belt.	Replace the intermediate transfer unit (see page 1-5-17).
	Defective transfer roller.	Replace the transfer roller unit(see page 1-5-17).
	Dirty scanner mirror.	Clean the scanner mirror.

(7) Streaks are printed horizontally.

Print example	Causes	Check procedures/corrective measures
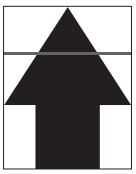	Dirty or flawed drum.	Perform the drum refresh operation. Flawed drum. Replace the drum unit (see page 1-5-16).
	Dirty developer section.	Clean any part contaminated with toner in the developer section.
	Poor contact of grounding terminal of drum unit.	Check the installation of the drum unit. If it operates incorrectly, replace it (see page 1-5-16).

(8) One side of the print image is darker than the other.

Print example	Causes	Check procedures/corrective measures
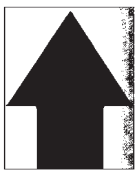	Defective exposure lamp.	Replace the LED PWB (see page 1-5-25).

(9) Spots are printed.

Print example	Causes	Check procedures/corrective measures
	Dirty contact glass.	Clean the contact glass.
	Dirty or flawed drum.	Perform the drum refresh operation. Flawed drum. Replace the drum unit (see page 1-5-16).
	Deformed or worn cleaning blade in the drum unit.	Replace the drum unit (see page 1-5-16).
	Flawed developer roller.	Replace the developer unit (see page 1-5-14).
	Dirty heat roller and press roller.	Clean the heat roller and press roller.

(10) Image is blurred.

Print example	Causes	Check procedures/corrective measures
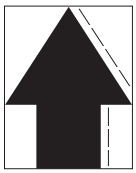	Scanner moves erratically.	Check if there is any foreign matter on the front and rear scanner rails. If any, remove it.
	Deformed press roller.	Replace the fuser unit (see page 1-5-18).
	Paper conveying section drive problem.	Check the gears and belts and, if necessary, grease them.

(11) The leading edge of the image is consistently misaligned with the original.

Print example	Causes	Check procedures/corrective measures
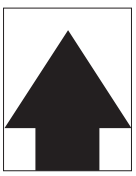	Misadjusted leading edge registration.	Run maintenance mode U034 to readjust the leading edge registration (see page 1-3-35).
	Misadjusted scanner leading edge registration.	Run maintenance mode U066 to readjust the scanner leading edge registration (see page 1-3-44).

(12) The leading edge of the image is sporadically misaligned with the original.

Print example	Causes	Check procedures/corrective measures
	Paper feed clutch, registration clutch or duplex clutch operating incorrectly.	Check the installation of the clutch. If it operates incorrectly, replace it.

(13) Paper is wrinkled.

Print example	Causes	Check procedures/corrective measures
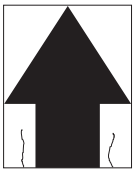	Paper curled.	Check the paper storage conditions.
	Paper damp.	Check the paper storage conditions.
	Defective pressure springs.	Replace the fuser unit (see page 1-5-18).

(14) Image is off-set.

Print example	Causes	Check procedures/corrective measures
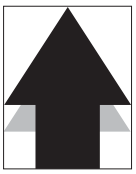	Deformed or worn cleaning blade in the drum unit.	Replace the drum unit (see page 1-5-16).
	Defective fuser unit.	Replace the fuser unit (see page 1-5-18).
	Wrong types of paper.	Check if the paper meets specifications. Replace paper.

(15) Part of image is missing.

Print example	Causes	Check procedures/corrective measures
	Paper damp.	Check the paper storage conditions.
	Paper creased.	Replace the paper.
	Drum condensation.	Perform the drum refresh operation.
	Dirty or flawed drum.	Perform the drum refresh operation. Flawed drum. Replace the drum unit (see page 1-5-16).
	Dirty transfer belt.	Clean the transfer belt. Replace the intermidate transfer unit if it is extremely dirty (see page 1-5-17).
	Dirty transfer roller.	Clean the transfer roller. Replace the transfer roller unit if it is extremely dirty (see page 1-5-17).

(16) Fusing is loose.

Print example	Causes	Check procedures/corrective measures
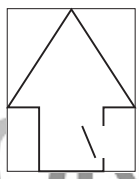	Wrong types of paper.	Check if the paper meets specifications, replace paper.
	Flawed heat roller or press roller.	Replace the fuser unit (see page 1-5-18).
	Defective pressure springs.	
	Defective fuser heater.	

(17) Image is out of focus.

Print example	Causes	Check procedures/corrective measures
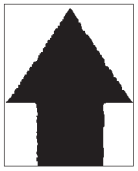	Defective image scanning unit.	Replace the image scanning unit (see page 1-5-22).
	Drum condensation.	Perform the drum refresh operation.

(18) Image center does not align with the original center.

Print example	Causes	Check procedures/corrective measures
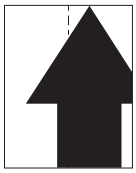	Misadjusted image center line.	Run maintenance item U034 to readjust the center line of image printing (see page 1-3-35).
	Misadjusted scanner center line.	Run maintenance item U067 to readjust the scanner leading edge registration (see page 1-3-45).
	Original is not placed correctly.	Place the original correctly.

1-4-4 Electric problems

If the part causing the problem s not designated as a service part, replace with the assembly comprising the part.
Troubleshooting to each failure must be made in the order of the numbered Problems.

Problem	Causes	Check procedures/corrective measures
(1) The machine does not operate when the main power switch is turned on.	1. No electricity at the power outlet.	Measure the input voltage.
	2. The power cord is not plugged in properly.	Check the contact between the power plug and the outlet.
	3. Broken power cord.	Check for continuity. If none, replace the cord.
	4. Defective main power switch.	Check for continuity across the contacts. If none, replace the power switch.
	5. Defective interlock switch.	Check for continuity across the contacts of interlock switch. If none, replace the power source PWB (see page 1-5-38).
	6. Defective power source PWB.	Replace the power source PWB (see page 1-5-38).
(2) ISU motor does not operate.	1. Defective connector cable or poor contact in the connector.	Reinsert the connector. Also check for continuity within the connector cable. If none, replace the cable. ISU motor and ISC PWB (YC5) ISC PWB (YC5) and main PWB (YC11)
	2. Defective drive transmission system.	Check if the rollers and gears rotate smoothly. If not, grease the bushes and gears. Check for broken gears and replace if any.
	3. Defective motor.	Replace the ISU motor.
	4. Defective PWB.	Replace the main PWB and check for correct operation (see page 1-5-33).
(3) Eject motor does not operate.	1. Defective connector cable or poor contact in the connector.	Reinsert the connector. Also check for continuity within the connector cable. If none, replace the cable. Eject motor and engine PWB (YC20)
	2. Defective drive transmission system.	Check if the rollers and gears rotate smoothly. If not, grease the bushes and gears. Check for broken gears and replace if any.
	3. Defective motor.	Replace the eject motor.
	4. Defective PWB.	Replace the engine PWB and check for correct operation (see page 1-5-35).

Problem	Causes	Check procedures/corrective measures
(4) ID Shutter motor does not operate.	1. Defective connector cable or poor contact in the connector.	Reinsert the connector. Also check for continuity within the connector cable. If none, replace the cable. ID Shutter motor and engine connect PWB (YC17) engine connect PWB and engine PWB (YC9)
	2. Defective drive transmission system.	Check if the rollers and gears rotate smoothly. If not, grease the bushes and gears. Check for broken gears and replace if any.
	3. Defective motor.	Replace the ID Shuttermotor.
	4. Defective PWB.	Replace the engine PWB or engin connect PWB and check for correct operation (see page 1-5-35).
(5) Fuser pressure release motor does not operate.	1. Defective connector cable or poor contact in the connector.	Reinsert the connector. Also check for continuity within the connector cable. If none, replace the cable. Fuser pressure release motor and engine PWB (YC22)
	2. Defective drive transmission system.	Check if the rollers and gears rotate smoothly. If not, grease the bushes and gears. Check for broken gears and replace if any.
	3. Defective motor.	Replace the Fuser pressure release motor.
	4. Defective PWB.	Replace the engine PWB and check for correct operation (see page 1-5-35).
(6) Controller fan motor does not operate.	1. Defective connector cable or poor contact in the connector.	Reinsert the connector. Also check for continuity within the connector cable. If none, replace the cable. Controller fan motor and main PWB (YC23)
	2. Defective motor.	Replace the controller fan motor.
	3. Defective PWB.	Replace the main PWB and check for correct operation (see page 1-5-33).
(7) Power source fan motor does not operate.	1. Defective connector cable or poor contact in the connector.	Reinsert the connector. Also check for continuity within the connector cable. If none, replace the cable. Power source fan motor and engine connect PWB (YC11) engine connect PWB and engine PWB (YC9)
	2. Defective motor.	Replace the power source fan motor.
	3. Defective PWB.	Replace the engine PWB or engine connect PWB and check for correct operation (see page 1-5-35).
(8) Developer fan motor 1 does not operate.	1. Defective connector cable or poor contact in the connector.	Reinsert the connector. Also check for continuity within the connector cable. If none, replace the cable. Developer fan motor 1 and engine PWB (YC21)
	2. Defective motor.	Replace the developer fan motor 1.
	3. Defective PWB.	Replace the engine PWB and check for correct operation (see page 1-5-35).

Problem	Causes	Check procedures/corrective measures
(9) Developer fan motor 2/3 does not operate.	1. Defective connector cable or poor contact in the connector.	Reinsert the connector. Also check for continuity within the connector cable. If none, replace the cable. Developer fan motor 2/3 and engine connect PWB (YC6) engine connect PWB and engine PWB (YC9)
	2. Defective motor.	Replace the developer fan motor 2/3.
	3. Defective PWB.	Replace the engine PWB or the engine connect PWB and check for correct operation (see page 1-5-35).
(10) LSU fan motor does not operate.	1. Defective connector cable or poor contact in the connector.	Reinsert the connector. Also check for continuity within the connector cable. If none, replace the cable. LSU fan motor and engine connect PWB (YC6) Engine connect PWB and engine PWB (YC9)
	2. Defective motor.	Replace the LSU fan motor.
	3. Defective PWB.	Replace the engine PWB engine connect PWB and check for correct operation (see page 1-5-35).
(11) IH fan motor does not operate.	1. Defective connector cable or poor contact in the connector.	Reinsert the connector. Also check for continuity within the connector cable. If none, replace the cable. IH fan motor and engine PWB (YC24)
	2. Defective motor.	Replace the IH fan motor.
	3. Defective PWB.	Replace the engine PWB and check for correct operation (see page 1-5-35).
(12) Fuser fan motor does not operate.	1. Defective connector cable or poor contact in the connector.	Reinsert the connector. Also check for continuity within the connector cable. If none, replace the cable. Fuser fan motor and engine PWB (YC24)
	2. Defective motor.	Replace the Fuser fan motor.
	3. Defective PWB.	Replace the engine PWB and check for correct operation (see page 1-5-35).
(13) Container fan motor does not operate.	1. Defective connector cable or poor contact in the connector.	Reinsert the connector. Also check for continuity within the connector cable. If none, replace the cable. Container fan motor and engine PWB (YC21)
	2. Defective motor.	Replace the container fan motor.
	3. Defective PWB.	Replace the engine PWB and check for correct operation (see page 1-5-35).
(14) Imaging fan motor does not operate.	1. Defective connector cable or poor contact in the connector.	Reinsert the connector. Also check for continuity within the connector cable. If none, replace the cable. Imaging fan motor and engine connect PWB (YC11) Engine connect PWB and engine PWB(YC9)
	2. Defective motor.	Replace the Imaging fan motor.
	3. Defective PWB.	Replace the engine PWB or engine connect PWB and check for correct operation (see page 1-5-35).

Problem	Causes	Check procedures/corrective measures
(15) Paper feed clutch 1 does not operate.	1. Defective connector cable or poor contact in the connector.	Reinsert the connector. Also check for continuity within the connector cable. If none, replace the cable. Paper feed clutch 1 and engine PWB (YC2)
	2. Defective clutch.	Replace the paper feed clutch 1.
	3. Defective PWB.	Replace the engine PWB and check for correct operation (see page 1-5-35).
(16) Paper feed clutch 2 does not operate.	1. Defective connector cable or poor contact in the connector.	Reinsert the connector. Also check for continuity within the connector cable. If none, replace the cable. Paper feed clutch 2 and video PWB (YC5) video PWB and main PWB
	2. Defective clutch.	Replace the paper feed clutch 2.
	3. Defective PWB.	Replace the video PWB or the main PWB and check for correct operation (see page 1-5-39, 1-5-33).
(17) Mid clutch 1 does not operate.	1. Defective connector cable or poor contact in the connector.	Reinsert the connector. Also check for continuity within the connector cable. If none, replace the cable. Mid clutch 1 and engine PWB (YC2)
	2. Defective clutch.	Replace the mid clutch 1.
	3. Defective PWB.	Replace the engine PWB and check for correct operation (see page 1-5-35).
(18) Mid clutch 2 does not operate.	1. Defective connector cable or poor contact in the connector.	Reinsert the connector. Also check for continuity within the connector cable. If none, replace the cable. Mid clutch 2 and video PWB (YC5)
	2. Defective clutch.	Replace the mid clutch 2.
	3. Defective PWB.	Replace the video PWB or the main PWB and check for correct operation (see page 1-5-39, 1-5-33).
(19) Registration clutch does not operate.	1. Defective connector cable or poor contact in the connector.	Reinsert the connector. Also check for continuity within the connector cable. If none, replace the cable. Registration clutch and engine PWB (YC2)
	2. Defective clutch.	Replace the registration clutch.
	3. Defective PWB.	Replace the engine PWB and check for correct operation (see page 1-5-35).
(20) Duplex clutch does not operate.	1. Defective connector cable or poor contact in the connector.	Reinsert the connector. Also check for continuity within the connector cable. If none, replace the cable. Duplex clutch and engine PWB (YC2)
	2. Defective clutch.	Replace the duplex clutch.
	3. Defective PWB.	Replace the engine PWB and check for correct operation (see page 1-5-35).

Problem	Causes	Check procedures/corrective measures
(21) Developer stop clutch does not operate.	1. Defective connector cable or poor contact in the connector.	Reinsert the connector. Also check for continuity within the connector cable. If none, replace the cable. Developer stop clutch and engine PWB (YC3)
	2. Defective clutch.	Replace the developer stop clutch.
	3. Defective PWB.	Replace the engine PWB and check for correct operation (see page 1-5-35).
(22) MP solenoid does not operate.	1. Defective connector cable or poor contact in the connector.	Reinsert the connector. Also check for continuity within the connector cable. If none, replace the cable. MP solenoid and engine PWB (YC2)
	2. Defective solenoid.	Replace the MP solenoid.
	3. Defective PWB.	Replace the engine PWB and check for correct operation (see page 1-5-35).
(23) Feedshift solenoid does not operate.	1. Defective connector cable or poor contact in the connector.	Reinsert the connector. Also check for continuity within the connector cable. If none, replace the cable. Feedshift solenoid and engine PWB (YC20)
	2. Defective solenoid.	Replace the Feedshift solenoid.
	3. Defective PWB.	Replace the engine PWB and check for correct operation (see page 1-5-35).
(24) The message requesting paper to be loaded is shown when paper is present on the cassette 1.	1. Defective connector cable or poor contact in the connector.	Reinsert the connector. Also check for continuity within the connector cable. If none, replace the cable. Paper sensor 1/2 and engine connect PWB (YC15) Engine connect PWB to engine PWB (YC9)
	2. Deformed actuator of the paper sensor.	Check visually and replace if necessary.
	3. Defective paper sensor.	Replace the paper sensor 1/2.
	4. Defective PWB.	Replace the engine PWB or engine connect PWB and check for correct operation (see page 1-5-35).
(25) The message requesting paper to be loaded is shown when paper is present on the cassette 2.	1. Defective connector cable or poor contact in the connector.	Reinsert the connector. Also check for continuity within the connector cable. If none, replace the cable. Paper sensor 3/4 and video PWB (YC7) Video PWB to main PWB (YC9)
	2. Deformed actuator of the paper sensor.	Check visually and replace if necessary.
	3. Defective paper sensor.	Replace the paper sensor 3/4.
	4. Defective PWB.	Replace the video PWB or main PWB and check for correct operation (see page 1-5-39, 1-5-33).

Problem	Causes	Check procedures/corrective measures
(26) The message requesting paper to be loaded is shown when paper is present on the MP tray.	1. Defective connector cable or poor contact in the connector.	Reinsert the connector. Also check for continuity within the connector cable. If none, replace the cable. MP paper sensor and engine PWB (YC5)
	2. Deformed actuator of the MP paper sensor.	Check visually and replace if necessary.
	3. Defective MP paper sensor.	Replace the MP paper sensor.
	4. Defective PWB.	Replace the engine PWB and check for correct operation (see page 1-5-35).
(27) The size of paper on the cassette 1 is not displayed correctly.	1. Defective connector cable or poor contact in the connector.	Reinsert the connector. Also check for continuity within the connector cable. If none, replace the cable. Paper size width switch 1 and engine connect PWB (YC14) Paper size length switch 1 and engine connect PWB (YC14) Engine connect PWB and engine PWB (YC9)
	2. Defective cassette size switch.	Replace the paper size width switch 1 or paper size length switch 1.
	3. Defective PWB.	Replace the engine PWB or the engine connect PWB and check for correct operation (see page 1-5-35).
(28) The size of paper on the cassette 2 is not displayed correctly.	1. Defective connector cable or poor contact in the connector.	Reinsert the connector. Also check for continuity within the connector cable. If none, replace the cable. Paper size width switch 2 and video PWB (YC6) Paper size length switch 2 and video PWB (YC6) Video PWB and main PWB
	2. Defective cassette size switch.	Replace the paper size width switch 1 or paper size length switch 1.
	3. Defective PWB.	Replace the video PWB or the main PWB and check for correct operation (see page 1-5-39, 1-5-33).
(29) A paper jam in the paper feed, paper conveying or eject section is indicated when the main power switch is turned on.	1. A piece of paper torn from paper is caught around registration sensor, duplex sensor , feed sensor 1/2 or eject sensor.	Check visually and remove it, if any.
	2. Defective sensor.	Replace the registration sensor, duplex sensor, feed sensor 1/2 or eject sensor.
(30) A message indicating cover open is displayed when the front cover or right cover 1/2 is closed.	1. Deformed actuator of the interlock switch.	Check visually and replace if necessary.
	2. Defective interlock switch.	Replace the interlock switch.

Problem	Causes	Check procedures/corrective measures
(31) The LED lamp does not turn on when original is present on the DP.	1. Defective connector cable or poor contact in the connector.	Reinsert the connector. Also check for continuity within the connector cable. If none, replace the cable. DP original sensor and DP main PWB (YC3) DP main PWB (YC1) and engine PWB (YC18)
	2. Defective sensor.	Replace the DP original sensor.
	3. Defective PWB.	Replace the DPLED PWB or the engine PWB and check for correct operation (see page 1-5-35).
(32) The size of original on the DP is not displayed correctly.	1. Defective connector cable or poor contact in the connector.	Reinsert the connector. Also check for continuity within the connector cable. If none, replace the cable. DP original size width sensor and DP main PWB (YC4) DP original size length sensor and DP main PWB (YC2) DP main PWB (YC1) and engine PWB (YC18)
	2. Defective sensor.	Replace the DP original size width sensor or DP original size length sensor.
	3. Defective PWB.	Replace the DP main PWB or engine PWB and check for correct operation (see page 1-5-31,1-5-35).
(33) DP paper feed motor does not operate.	1. Defective connector cable or poor contact in the connector.	Reinsert the connector. Also check for continuity within the connector cable. If none, replace the cable. DP paper feed motor and DP main PWB (YC9) DP main PWB (YC1) and engine PWB (YC18)
	2. Defective drive transmission system.	Check if the rollers and gears rotate smoothly. If not, grease the bushes and gears. Check for broken gears and replace if any.
	3. Defective motor.	Replace the DP paper feed motor.
	4. Defective PWB.	Replace the DP main PWB or engine PWB and check for correct operation (see page 1-5-31,1-5-35).
(34) DP switchback motor does not operate.	1. Defective connector cable or poor contact in the connector.	Reinsert the connector. Also check for continuity within the connector cable. If none, replace the cable. DP switchback motor and DP main PWB (YC9) DP main PWB (YC1) and engine PWB (YC18)
	2. Defective drive transmission system.	Check if the rollers and gears rotate smoothly. If not, grease the bushes and gears. Check for broken gears and replace if any.
	3. Defective motor.	Replace the DP switchback motor.
	4. Defective PWB.	Replace the DP main PWB or engine PWB and check for correct operation (see page 1-5-31,1-5-35).

Problem	Causes	Check procedures/corrective measures
(35) DP paper feed clutch does not operate.	1. Defective connector cable or poor contact in the connector.	Reinsert the connector. Also check for continuity within the connector cable. If none, replace the cable. DP paper feed clutch and DP main PWB (YC8) DP main PWB (YC1) and engine PWB (YC18)
	2. Defective clutch.	Replace the DP paper feed clutch.
	3. Defective PWB.	Replace the DP main PWB or engine PWB and check for correct operation (see page 1-5-31,1-5-35).
(36) DP registration clutch does not operate.	1. Defective connector cable or poor contact in the connector.	Reinsert the connector. Also check for continuity within the connector cable. If none, replace the cable. DP registration clutch and DP main PWB (YC8) DP main PWB (YC1) and engine PWB (YC18)
	2. Defective clutch.	Replace the DP registration clutch.
	3. Defective PWB.	Replace the DP main PWB or engine PWB and check for correct operation (see page 1-5-31,1-5-35).
(37) An original jams when the main power switch is turned on.	1. A piece of paper torn from an original is caught around the DP paper feed sensor, DP registration sensor or DP timing sensor.	Check visually and remove it, if any.
	2. Defective sensor.	Replace the DP paper feed sensor, DP registration sensor or DP timing sensor.
(38) A message indicating cover open is displayed when the DP top cover is closed.	1. Defective connector cable or poor contact in the connector.	Reinsert the connector. Also check for continuity within the connector cable. If none, replace the cable. DP open/close sensor and DP main PWB (YC5) DP main PWB (YC1) and engine PWB (YC18)
	2. Defective DP open/close sensor.	Replace the DP open/close sensor.

1-4-5 Mechanical problems

If the part causing the problem was not supplied, use the unit including the part for replacement.

Problem	Causes/check procedures	Corrective measures
(1) No primary paper feed.	Check if the surfaces of the following rollers are dirty with paper dusts. Pickup roller Paper feed roller MP paper feed roller	Clean with isopropyl alcohol.
	Check if any of the following rollers is deformed. Pickup roller Paper feed roller MP paper feed roller	Check visually and replace any deformed (see page 1-5-9, 1-5-10).
	Defective paper feed clutch installation.	Check visually and remedy if necessary.
(2) No secondary paper feed.	Check if the surfaces of the following rollers are dirty with paper powder. Right registration roller Left registration roller	Clean with isopropyl alcohol.
	Defective registration clutch installation.	Check visually and remedy if necessary.
(3) Skewed paper feed.	Paper width guide in the cassette are installed incorrectly.	Check the paper width guide visually and remedy or replace if necessary.
(4) Multiple sheets of paper are fed.	Check if the paper is excessively curled.	Change the paper.
	Paper is loaded incorrectly.	Load the paper correctly.
	Check if the retard roller is worn.	Replace the retard roller if it is worn (see page 1-5-9).
(5) Paper jams.	Check if the paper is excessively curled.	Change the paper.
	Check if the contact between the right and left registration rollers is correct.	Check visually and remedy if necessary.
	Check if the heat roller or press roller is extremely dirty or deformed.	Check visually and replace the fuser unit (see page 1-5-18).
(6) Toner drops on the paper conveying path.	Check if the drum unit or developer unit is extremely dirty.	Clean the drum unit or developer unit.

Problem	Causes/check procedures	Corrective measures
(7) Abnormal noise is heard.	Check if the rollers, pulleys and gears operate smoothly.	Grease the bushes and gears.
	Check if the following clutches are installed correctly. Paper feed clutch Mid clutch Registration clutch Duplex clutch	Check visually and remedy if necessary.
(8) No primary original feed.	Check if the surfaces of the following pulleys are dirty with paper powder. DP forwarding pulley DP paper feed roller	Clean with isopropyl alcohol.
	Check if the following pulleys is deformed. DP forwarding pulley DP paper feed roller	Check visually and replace any deformed (see page 1-5-29).
(9) Multiple sheets of original are fed.	Original is not correctly set.	Set the original correctly.
	Check if the DP separation pulley is worn.	Replace the DP separation pulley if it is worn (see page 1-5-29).
(10) Originals jam.	Originals being used do not conform with the specifications.	Use only originals conforming to the specifications.
	Check if the surfaces of the following pulleys are dirty with paper powder. DP forwarding pulley DP paper feed roller	Clean with isopropyl alcohol.
	Check if the contact between the registration roller and registration pulley is correct.	Check visually and remedy if necessary.
	Check if the contact between the conveying roller and conveying pulley is correct.	Check visually and remedy if necessary.
	Check if the contact between the eject roller and eject pulley is correct.	Check visually and remedy if necessary.
	Check if the contact between the switchback roller and switchback pulley is correct.	Check visually and remedy if necessary.

1-4-6 Send error code

This section describes the scanning errors and descriptions, preventive actions, as well as corrective actions.
Error codes not described here could fall within software errors.
If such an error is encountered, turn power off then on, and advise the service representative.

(1) Scan to SMB error codes

Code	Contents	Check procedures/corrective measures
1101	Host destined does not exist on the network.	1. Confirm the destined host. 2. Confirm thedevice's network parameters. 3. Confirm the parameters of the network to which the device is connected are correct.
1102	Login to the host has failed.	1. Confirm user name and password. 2. Confirm the parameters of the network to which the device is connected are correct. 3. Check the host if the folder is properly shared.
1103	Destined host, folder, and/or file names are invalid.	1. Check illegal characters are not contained within these names. 2. Check the name of the folder and files conform with the naming syntax. 3. Confirm destined host and folder.
1105	SMB protocol is not enabled.	1. Confirm device's SMB protocols.
2101	Login to the host has failed.	1. Confirm the destined host. 2. Confirm that the LAN cable is properly connected to the device. 3. Check the SMB port number. 4. Confirm the device's network parameters. 5. Confirm the parameters of the network to which the device is connected are correct.
2201	Writing scanned data has failed.	1. Check the file name to save the scanned data. 2. Confirm the device's network parameters. 3. Confirm the parameters of the network to which the device is connected are correct.
2203	No response from the host during a certain period of time.	1. Confirm the network parameters the device is connected. 2. Confirm that the LAN cable is properly connected to the device.

(2) Scan to FTP error codes

Code	Contents	Check procedures/corrective measures
1101	FTP server does not exist on the network.	1. Check the FTP server name. 2. Confirm device's network parameters. 3. Confirm the parameters of the network to which the device is connected are correct.
1102	Login to the FTP server has failed.	1. Confirm user name and password. 2. Check the FTP server name.
1103	Destined folder is invalid.	1. Check that the illegal characters are not contained within these names. 2. Check the FTP server name.
1105	FTP protocol is not enabled.	1. Confirm device's FTP protocols.
1131	Initializing TLS has failed.	1. Confirm device's security parameters.
1132	TLS negotiation has failed.	1. Confirm device's security parameters. 2. Check the FTP server name.
2101	Access to the FTP server has failed.	1. Check the FTP server name. 2. Confirm that the LAN cable is properly connected to the device. 3. Check the FTP port number. 4. Confirm device's network parameters. 5. Confirm the network parameters the device is connected. 6. Check the FTP server name.
2102	Access to the FTP server has failed. (Connection timeout)	1. Check the FTP server name. 2. Check the FTP port number. 3. Confirm device's network parameters. 4. Confirm the network parameters the device is connected. 5. Check the FTP server name.
2103	The server cannot establish communication.	1. Check the FTP server name. 2. Check the FTP port number. 3. Confirm device's network parameters. 4. Confirm the network parameters the device is connected. 5. Check the FTP server name.
2201	Connection with the FTP server has failed.	1. Confirm device's network parameters. 2. Confirm the network parameters the device is connected. 3. Confirm destined folder. 4. Check the FTP server name.
2202	Connection with the FTP server has failed. (Timeout)	1. Confirm device's network parameters. 2. Confirm the network parameters the device is connected.
2203	No response from the server during a certain period of time.	1. Confirm device's network parameters. 2. Confirm the network parameters the device is connected.

Code	Contents	Check procedures/corrective measures
2231	Connection with the FTP server has failed. (FTPS communication)	1. Confirm device's network parameters. 2. Confirm the network parameters the device is connected.
3101	FTP server responded with an error.	1. Confirm device's network parameters. 2. Confirm the network parameters the device is connected. 3. Check the FTP server.

(3) Scan to E-mail error codes

Code	Contents	Check procedures/corrective measures
1101	SMTP/POP3 server does not exist on the network.	1. Check the SMTP/POP3 server name. 2. Confirm device's network parameters. 3. Confirm the parameters of the network to which the device is connected are correct.
1102	Login to the SMTP/POP3 server has failed.	1. Confirm user name and password. 2. Check the SMTP/POP3 server.
1104	The domain the destined address belongs is prohibited by scanning restriction.	1. Confirm device's SMTP parameters.
1105	SMTP protocol is not enabled.	1. Confirm device's SMTP protocols.
1106	Sender’s address is not specified.	1. Confirm device's SMTP protocols.
2101	Connection to the SMTP/POP3 server has failed.	1. Check the SMTP/POP3 server name. 2. Confirm that the LAN cable is properly connected to the device. 3. Check the SMTP/POP3 port number. 4. Confirm device's network parameters. 5. Confirm the network parameters the device is connected. 6. Check the SMTP/POP3 server.
2102	Connection to the SMTP/POP3 server has failed. (Connection timeout)	1. Check the SMTP/POP3 server name. 2. Check the SMTP/POP3 port number. 3. Confirm device's network parameters. 4. Confirm the network parameters the device is connected. 5. Check the SMTP/POP3 server.
2103	The server cannot establish communication.	1. Check the SMTP/POP3 server name. 2. Check the SMTP/POP3 port number. 3. Confirm device's network parameters. 4. Confirm the network parameters the device is connected. 5. Check the SMTP/POP3 server.
2201	Connection to the SMTP/POP3 server has failed.	1. Confirm device's network parameters. 2. Confirm the network parameters the device is connected.
2202	Connection to the SMTP/POP3 server has failed. (Timeout)	1. Confirm device's network parameters. 2. Confirm the network parameters the device is connected.
2204	The size of scanning exceeded its limit.	1. Confirm device's network parameters.
3101	SMTP/POP3 server responded with an error.	1. Confirm device's network parameters. 2. Confirm the network parameters the device is connected. 3. Check the SMTP/POP3 server.
3201	No SMTP authentication is found.	1. Check the SMTP server. 2. The device supports SMTP authentication services including CRAM-MD5, DIGEST-MD5, PLAIN and LOGIN.

Code	Contents	Check procedures/corrective measures
4803	Failed to establish the SSL session.	1. Verify the self certificate of the device. 2. Check the server certificate of the SMTP/POP3 server. 3. Check the SMTP/POP3 configuration of the device and the SMTP/POP3 server.

1-4-7 Error codes

(1) Error code

Error codes are listed on the communication reports, activity report, etc. The codes consist of an error code indication U followed by a 5-digit number. (Error codes for V34 communication errors start with an E indication, followed by five digits.)
The upper three of the five digits indicate general classification of the error and its cause, while the lower two indicate the detailed classification. Items for which detailed classification is not necessary have 00 as the last two digits.

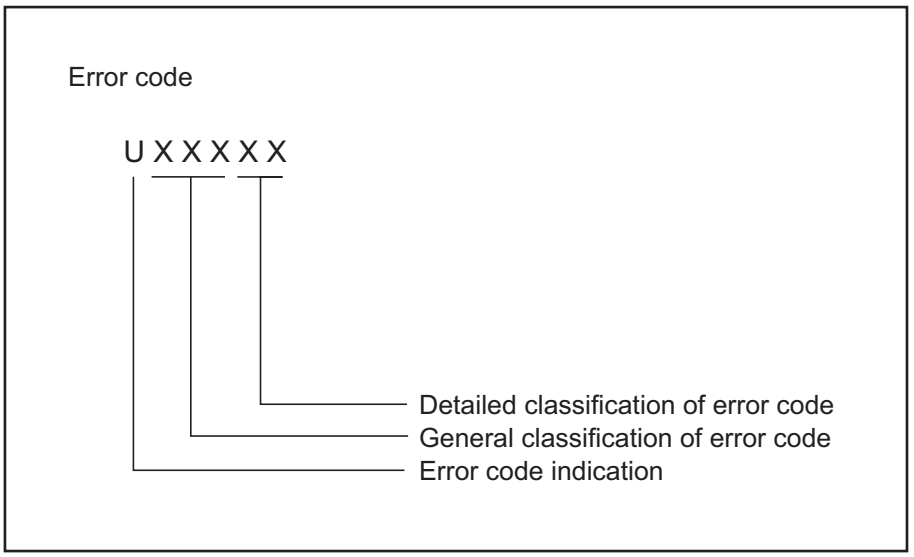

Figure 1-4-3

(2) Table of general classification

Error code	Description
U00000	No response or busy after the set number of redials.
U00100	Transmission was interrupted by a press of the stop/clear key.
U00200	Reception was interrupted by a press of the stop/clear key.
U00300	Recording paper on the destination unit has run out during transmission.
U004XX	A connection was made but interrupted during handshake with the receiver unit (See page 1-4-69).
U00500	Multiple communication was interrupted and call was not made on destination units after interruption.
U006XX	Communication was interrupted because of a machine problem (See page 1-4-70).
U00700	Communication was interrupted because of a problem in the destination unit.
U008XX	A page transmission error occurred in G3 mode (See page 1-4-70).
U009XX	A page reception error occurred in G3 mode (See page 1-4-70).
U010XX	Transmission in G3 mode was interrupted by a signal error (See page 1-4-71).
U011XX	Reception in G3 mode was interrupted by a signal error (See page 1-4-73).
U01400	An invalid one-touch key was specified during communication.
U01500	A communication error occurred when calling in V.8 mode.
U01600	A communication error occurred when called in V.8 mode.
U017XX	A communication error occurred before starting T.30 protocol during transmission in V.34 mode (See page 1-4-74).
U018XX	A communication error occurred before starting T.30 protocol during reception in V.34 mode (See page 1-4-75).
U02000	Relay broadcast was refused by a relay station because of a mismatch in permit ID number and permit telephone number when a relay command was issued.
U02100	A relay command failed because the destination unit (relay station) had no relay broadcast capability.
U02200	A relay command from a command station failed because a telephone number that was not registered in the relay station was specified. Or, relay broadcast was requested to a relay station but failed because a telephone number that was not registered in the relay station was specified. Or, Subaddress-based relay broadcast transmission failed because the data registered in the Subaddress relay box was deleted.
U023XX	Receiving station information was not normally received in reception of a relay command (See page 1-4-75).
U02400	An interoffice subaddress-based relay transmission was interrupted because of a mismatch in the specified relay box number.
U03000	No document was present in the destination unit when polling reception started.
U03100	In reverse polling, although no original was set in the destination unit, transmission was complete.
U03200	In confidential polling reception, data was not accumulated in the specified box in the destination unit. Or, in interoffice subaddress-based bulletin board reception, data was not stored in the box specified by the destination unit.

Error code	Description
U03300	In polling reception from a unit of our make, operation was interrupted due to a mismatch in permit ID or telephone number. Or, in interoffice subaddress-based bulletin board reception, operation was interrupted due to a mismatch in permit ID or telephone number.
U03400	Polling reception was interrupted because of a mismatch in individual numbers (destination unit is either of our make or by another manufacturer).
U03500	In confidential polling reception, the specified confidential box No. was not registered in the destination. Or, in interoffice subaddress-based bulletin board reception, the specified Subaddress confidential box number was not registered in the destination unit. Or, the destination was being accessed.
U03600	Confidential polling reception was interrupted because of a mismatch in specified confidential box No. Or, an interoffice subaddress-based bulletin board reception was interrupted because of a mismatch in the specified subaddress confidential box number.
U03700	Confidential polling reception failed because the destination unit had no confidential polling transmission capability or data was not accumulated in any box in the destination unit. Or, interoffice subaddress-based bulletin board reception failed because the destination unit had no subaddress-based bulletin board transmission capability, or data was not stored in any subaddress confidential box in the destination unit.
U04000	The confidential box specified for confidential transmission was not registered in the destination unit. Or, in interoffice subaddress-based transmission mode, the specified subaddress box number was not registered in the destination unit. Or, the destination was being accessed.
U04100	Confidential transmission failed because the destination unit had no confidential capability. Or, subaddress-based transmission failed because the destination unit had no subaddress-based reception capability.
U04200	In encrypted transmission, the specified encryption box was not registered in the destination unit.
U04300	Encrypted transmission failed because the destination unit had no encrypted communication capability.
U044XX	Communication was interrupted because of an encryption key error during encrypted transmission (See page 1-4-75).
U04500	Encrypted reception was interrupted because of a mismatch in encryption keys.
U05000	In transmission with a specified number, the set number of originals was different from the number of transmitted originals.
U05100	Password check transmission or restricted transmission was interrupted because the permit ID's did not agree with.
U05200	Password check reception or restricted reception was interrupted because the permit ID's did not match, the rejected FAX number's did match, or the destination receiver did not return its phone number.
U05300	The password check reception or the restricted reception was interrupted because the permitted numbers did not match, the rejected numbers did match, or the machine in question did not acknowledge its phone number.
U09000	G3 communication was attempted but failed because the destination unit was a G2 machine.

Error code	Description
U12000	Relay broadcast was requested from a command station but memory overflowed during reception. Or, in subaddress-based relay reception, memory overflowed.
U12100	Relay was commanded but memory overflowed in the destination unit (relay station).
U14000	Memory overflowed during confidential reception. Or, in subaddress-based confidential reception, memory overflowed.
U14100	Memory overflowed in the destination unit during confidential transmission. Or, in interoffice subaddress-based transmission, memory overflowed in the destination unit.
U19000	Memory overflowed during memory reception.
U19100	Memory overflowed in the destination unit during transmission.
U19200	Memory transmission failed because a decoding error occurred.
U19300	Transmission failed because an error occurred during JBIG encoding.
U19400	Reception failed because an error occurred during JBIG decoding.

(2-1) U004XX error code table: Interrupted phase B

Error code	Description
U00420	A relay request was received from the host center but interrupted because of a mismatch in permit ID or telephone number.
U00421	Subaddress-based relay reception was interrupted because of a mismatch in the specified subaddress relay box number.
U00430	Polling request (confidential or reverse) was received but interrupted because of a mismatch in permit number. Or, subaddress-based bulletin board transmission request was received but interrupted because of a mismatch in permit ID in the transmitting unit.
U00431	Confidential polling transmission was interrupted because the specified confidential box No. was not registered. Or, an subaddress-based bulletin board transmission was interrupted because the specified subaddress confidential box was not registered.
U00432	Confidential polling transmission was interrupted because of a mismatch in confidential box ID number. Or, an subaddress-based bulletin board transmission was interrupted because of a mismatch in Subaddress confidential box numbers.
U00433	Confidential polling request was received but data was not present in the confidential box. Or, subaddress-based bulletin board transmission request was received but data was not present in the subaddress confidential box.
U00434	Confidential polling request was received but interrupted because the specified confidential box No. was intended for encryption.
U00435	Confidential polling request was received but interrupted because the specified confidential box was being accessed. Or, subaddress-based bulletin board transmission request was received but interrupted because the specified subaddress confidential box was being accessed.
U00440	Confidential reception was interrupted because the specified confidential box No. was not registered. Or, subaddress-based confidential reception or subaddress-based relay reception was interrupted because the specified subaddress box was not registered. Or, subaddress based confidential reception or subaddress relay command reception was interrupted because the specified subaddress box No. was being accessed.
U00441	Confidential reception was interrupted because the specified confidential box No. was intended for encryption.
U00450	The destination transmitter disconnected because the permit ID's did not agree with while the destination transmitter is in password-check transmission or restricted transmission.
U00460	Encrypted reception was interrupted because the specified encryption box number was not registered. Or, encrypted reception request was received but interrupted because the specified encryption box was being accessed.
U00462	Encrypted reception was interrupted because the encryption key for the specified encryption box was not registered.

(2-2) U006XX error code table: Problems with the unit

Error code	Description
U00600	The document processor cover is open.
U00601	Document jam or the document length exceeds the maximum.
U00602	Image scanning section problem.
U00603	No document feed.
U00604	Document length exceeded the limit of the bitmap memory capacity.
U00610	Recording section cover is open.
U00611	Recording paper JAM
U00613	Image writing section problem
U00614	Nearly empty of recording paper
U00615	Empty of recording paper
U00620	Copier fixing unit problem
U00622	Copier drive motor problem
U00655	CTS was not activated after RTS due to a modem error.
U00656	Data was not transmitted after CTS was activated due to a modem error.
U00670	Power was cut off during communication.
U00677	There was no file to transmit in the memory transmission mode.
U00690	System error.

(2-3) U008XX error code table: Page transmission error

Error code	Description
U00800	A page transmission error occurred because of reception of a RTN or PIN signal.
U00810	A page transmission error reoccurred after retry of transmission in the ECM mode.

(2-4) U009XX error code table: Page reception error

Error code	Description
U00900	An RTN or PIN signal was transmitted because of a page reception error.
U00910	A page reception error remained after retry of transmission in the ECM mode.

(2-5) U010XX error code table: G3 transmission

Error code	Description
U01000	An FTT signal was received for a set number of times after TCF signal transmission at 2400 bps. Or, an RTN signal was received in response to a Q signal (excluding EOP) after transmission at 2400 bps.
U01001	Function of the unit differs from that indicated by a DIS signal.
U01010	No relevant signal was received after transmission of a DNL (MPS or EOM) signal, and the preset number of command retransfers was exceeded (between units of our make).
U01011	No relevant signal was received after transmission of a DCS, TCF signal, and the preset number of command retransfers was exceeded.
U01012	No relevant signal was received after transmission of an NSS1, NSS2 (TCF) signal, and the preset number of command retransfers was exceeded (between units of our make).
U01013	No relevant signal was received after transmission of an NSS3, TCF signal, and the preset number of command retransfers was exceeded (between units of our make).
U01014	No relevant signal was received after transmission of an MPS signal, and the preset number of command retransfers was exceeded.
U01015	No relevant signal was received after transmission of an EOM signal, and the preset number of command retransfers was exceeded.
U01016	An MCF signal was received but no DIS signal was received after transmission of an EOM signal, and T1 timeout was detected.
U01017	No relevant signal was received after transmission of an EOP signal, and the preset number of command retransfers was exceeded.
U01018	No relevant signal was received after transmission of a PRI-EOP signal, and the preset number of command retransfers was exceeded.
U01019	No relevant signal was received after transmission of a CNC signal, and the preset number of command retransfers was exceeded (between units of our make).
U01020	No relevant signal was received after transmission of a CTC signal, and the preset number of command retransfers was exceeded (ECM).
U01021	No relevant signal was received after transmission of an EOR.Q signal, and the preset number of command retransfers was exceeded (ECM).
U01022	No relevant signal was received after transmission of an RR signal, and the preset number of command retransfers was exceeded (ECM).
U01023	No relevant signal was received after transmission of a PSS.NULL signal, and the preset number of command retransfers was exceeded (ECM).
U01024	No relevant signal was received after transmission of a PSS.MPS signal, and the preset number of command retransfers was exceeded (ECM).
U01025	No relevant signal was received after transmission of a PPS.EOM signal, and the preset number of command retransfers was exceeded (ECM).
U01026	No relevant signal was received after transmission of a PPS.EOP signal, and the preset number of command retransfers was exceeded (ECM).
U01027	No relevant signal was received after transmission of a PPS.PRI-EOP signal, and the preset number of command retransfers was exceeded (ECM).
U01028	T5 time-out was detected during ECM transmission (ECM).

Error code	Description
U01040	A DCN or other inappropriate signal was received during standby for DIS signal reception.
U01041	A DCN signal was received after transmission of a DNL (MPS or EOM) signal (between units of our make).
U01042	A DCN signal was received after transmission of a DCS, TCF signal.
U01043	A DCN signal was received after transmission of an NSS1, NSS2 (TCF) signal (between units of our make).
U01044	A DCN signal was received after transmission of an NSS3, TCF signal (between units of our make).
U01045	A DCN or other inappropriate signal was received after transmission of an MPS signal.
U01046	A DCN or other inappropriate signal was received after transmission of an EOM signal.
U01047	A DCN or other inappropriate signal was received after transmission of an EOP signal.
U01048	A DCN signal was received after transmission of a PRI-EOP signal.
U01049	A DCN signal was received after transmission of a CNC signal (between units of our make).
U01050	A DCN signal was received after transmission of a CTC signal (ECM).
U01051	A DCN signal was received after transmission of an EOR.Q signal (ECM).
U01052	A DCN signal was received after transmission of an RR signal (ECM).
U01053	A DCN signal was received after transmission of a PPS.NULL signal (ECM).
U01054	A DCN signal was received after transmission of a PPS.MPS signal (ECM).
U01055	A DCN signal was received after transmission of a PPS.EOM signal (ECM).
U01056	A DCN signal was received after transmission of a PPS.EOP signal (ECM).
U01057	A DCN signal was received after transmission of a PPS.PRI-EOP signal (ECM).
U01070	Polarity reversal was detected during handshake.
U01071	Polarity reversal was detected during message transmission.
U01072	A break in loop current was detected during transmission.
U01073	During reverse polling in V.34 mode at the receiver unit, a CM signal was not detected when transmitting after reception.
U01080	A PIP signal was received after transmission of a PPS.NULL signal.
U01091	During transmission in V.34 mode, communication was interrupted because a PPR signal was received over 10 times even after reducing the communication speed to the minimum with the symbol speed maintained at the level of connection.
U01092	During transmission in V.34 mode, communication was interrupted because of an impossible combination of the symbol speed and communication speed.

(2-6) U011XX error code table: G3 reception

Error code	Description
U01100	Function of the unit differs from that indicated by a DCS signal.
U01101	Function of the unit (excl. communication mode select) differs from that indicated by an NSS signal.
U01102	A DTC (NSC) signal was received when no transmission data was in the unit.
U01110	No response after transmission of a DIS signal.
U01111	No response after transmission of a DTC (NSC) signal.
U01112	No training reception after reception of a DCS or NSS signal.
U01113	No response after transmission of an FTT signal.
U01114	No message reception after transmission of a CFR signal.
U01115	No message reception after transmission of an MCF signal.
U01116	No message reception after transmission of a PPR signal.
U01117	No message reception after transmission of a CTR signal.
U01118	No message reception after transmission of an ERR signal.
U01119	No further signals were received after reception of a message.
U01120	No response after transmission of an MCF signal.
U01121	No response after transmission of an RTP signal.
U01122	No response after transmission of an RTN signal.
U01123	No response after transmission of a PIP signal.
U01124	No response after transmission of a PIN signal.
U01125	No response after transmission of a CNS signal (between units of our make).
U01126	No response after transmission of a PPR signal (ECM).
U01127	No response after transmission of an ERR signal (ECM).
U01128	No response after transmission of an RNR signal (ECM).
U01129	No response after transmission of an SPA signal (short protocol).
U01140	A DCN signal was received after transmission of a DIS signal.
U01141	A DCN signal was received after transmission of a DTC signal.
U01142	A DCN signal was received after transmission of a DCS or NSS signal.
U01143	A DCN signal was received after transmission of an FTT signal.
U01144	A DCN signal was received after transmission of a CFR signal.
U01145	A DCN signal was received after reception of a message.
U01146	A DCN signal was received after transmission of an MCF signal (interoffice communication after reception of an MPS, EOM signal or confidential interoffice communication).
U01147	A DCN signal was received after transmission of an RTP signal.
U01148	A DCN signal was received after transmission of an RTN signal.
U01149	A DCN signal was received after transmission of a PIP signal.
U01150	A DCN signal was received after transmission of a PIN signal.
U01151	A DCN signal was received after transmission of a PPR signal (ECM).

Error code	Description
U01152	A DCN signal was received after transmission of a CTR signal (ECM).
U01153	A DCN signal was received after transmission of an ERR signal (ECM).
U01154	A DCN signal was received after transmission of an RNR signal (ECM).
U01155	A DCN signal was received after transmission of an SPA signal (short protocol).
U01160	During message reception, transmission time exceeded the maximum transmission time per line.
U01161	Number of error lines exceeded limits during message reception.
U01162	A break in loop current was detected during message reception.
U01163	Polarity reversal was detected during message reception.
U01164	One page length exceeded the specified length during message reception.
U01170	A decoding error occurred during MMR message reception.
U01172	During reverse polling in V.34 mode at the transmitting unit, a JM signal was not detected after transmission of a CM signal when receiving after transmission.
U01191	Communication was interrupted because an error occurred during an image data reception sequence in the V.34 mode.
U01199	A DIS signal with different FIF was received after transmission of a DIS signal.

(2-7) U017XX error code table: V.34 transmission

Error code	Description
U01700	A communication error occurred in phase 2 (line probing).
U01720	A communication error occurred in phase 4 (modem parameter exchange).
U01721	Operation was interrupted due to the absence of a common communication speed between units.

U01700: A communication error that occurs at the transmitting unit in the period after transmission of INFO0 before entering phase 3 (primary channel equivalent device training). For example, INFO0/A/Abar (B/Bbar, for polling transmission)/INFOh was not detected.
U01720: A communication error that occurs at the transmitting unit in the period after initiating the control channel before entering the T.30 process. For example, PPh/ALT/MPh/E was not detected.
U01721: In the absence of a common communication speed between units (including when an impossible combination of communication speed and symbol speed occurs) after MPh exchange; 1) a DCN signal was received from the destination unit, and the line was cut; or 2) a DIS (NSF, CSI) signal was received from the destination unit and, in response to the signal, the unit transmitted a DCN signal, and the line was cut.

(2-8) U018XX error code table: V.34 reception

Error code	Description
U01800	A communication error occurred in phase 2 (line probing).
U01810	A communication error occurred in phase 3 (primary channel equivalent device training).
U01820	A communication error occurred in phase 4 (modem parameter exchange).
U01821	Operation was interrupted due to the absence of a common communication speed between units.

U01800: A communication error that occurs at the receiver unit in the period after transmission of INFO0 before entering phase 3 (primary channel equivalent device training). For example, INFO0/B/Bbar (A/Abar, for polling reception)/probing tone was not detected.
U01810: A communication error that occurs at the receiver unit in phase 3 (primary channel equivalent device training).
For example, S/Sbar/PP/TRN was not detected.
U01820: A communication error that occurs at the receiver unit in the period after initiating the control channel before entering the T.30 process. For example, PPh/ALT/MPh/E was not detected.
U01821: In the absence of a common communication speed between units (including when an impossible combination of communication speed and symbol speed occurs) after MPh exchange, a DCN signal was transmitted to the destination unit and the line was cut.

(2-9) U023XX error code table: Relay command abnormal reception

Error code	Description
U02303	Timeout was detected before a correct DNL signal was received.
U02304	A signal other than MPS or EOM signal was received after a DNL signal was received.

(2-10) U044XX error code table: Encrypted transmission

Error code	Description
U04400	Encrypted transmission was interrupted because encryption keys did not agree.
U04401	Calling failed during encrypted transmission because the encryption key was not registered.

This page is intentionally left blank.

1-5-1 Precautions for assembly and disassembly

(1) Precautions

Before starting disassembly, press the Power key on the operation panel to off. Make sure that the Power lamp is off before turning off the main power switch. Unplug the power cable from the wall outlet.
When the fax kit is installed, be sure to disconnect the modular code before starting disassembly.
When handling PWBs (printed wiring boards), do not touch parts with bare hands.
The PWBs are susceptible to static charge.
Do not touch any PWB containing ICs with bare hands or any object prone to static charge.
When removing the hook of the connector, be sure to release the hook.
Take care not to get the cables caught.
To reassemble the parts, use the original screws. If the types and the sizes of screws are not known, refer to the PARTS LIST.

(2) Drum unit

Note the following when handling or storing the drum unit.
When removing the drum unit, never expose the drum surface to strong direct light.
Keep the drum unit at an ambient temperature between -20°C/-4°F and 40°C/104°F and at a relative humidity not higher than 85% RH. Avoid abrupt changes in temperature and humidity.
Avoid exposure to any substance which is harmful to or may affect the quality of the drum unit.
Do not touch the drum surface with any object. Should it be touched by hands or stained with oil, clean it.

(3) Toner

Store the toner containers in a cool, dark place.
Avoid exposing the toner containers to direct light and high humidity.

(4) How to tell a genuine Kyocera toner container

As a means of brand protection, the Kyocera toner container utilizes an optical security technology to enable visual validation. A validation viewer is required to accomplish this.

Hold the validation viewer over the left side part of the brand protection seal on the toner container. Through each window of the validation viewer, the left side part of the seal should be seen as follows:

A black-colored band when seen through the left side window (●)

A shiny or gold-colored band when seen through the right side window (☼)

The above will reveal that the toner container is a genuine Kyocera branded toner container, otherwise, it is a counterfeit.

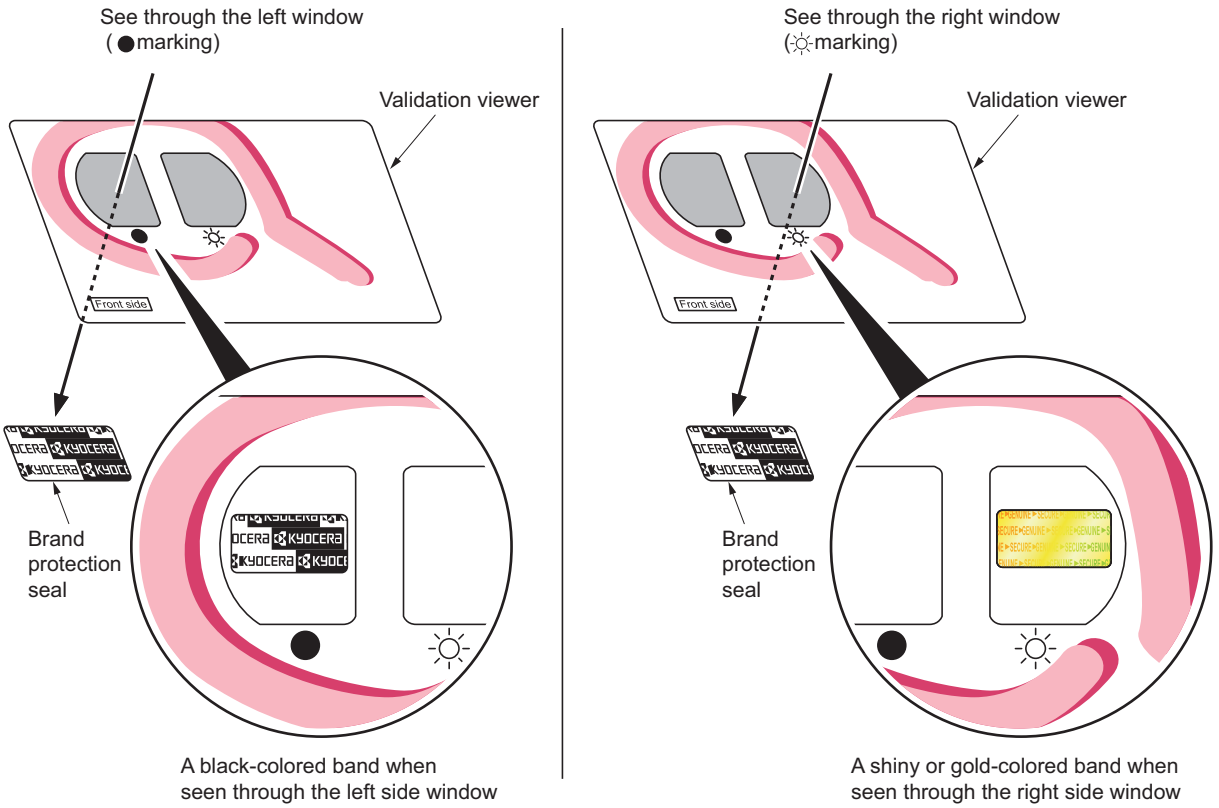

Figure 1-5-1

The brand protection seal has an incision as shown below to prohibit reuse.

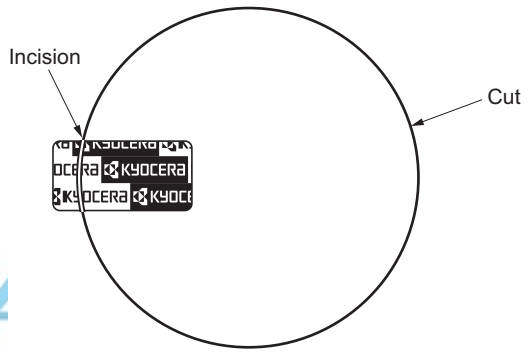

Figure 1-5-2

1-5-2 Outer covers

(1) Detaching and refitting the front cover

Procedure

1. Remove the cassette.
   (See page 1-5-9)
2. Open the front cover.

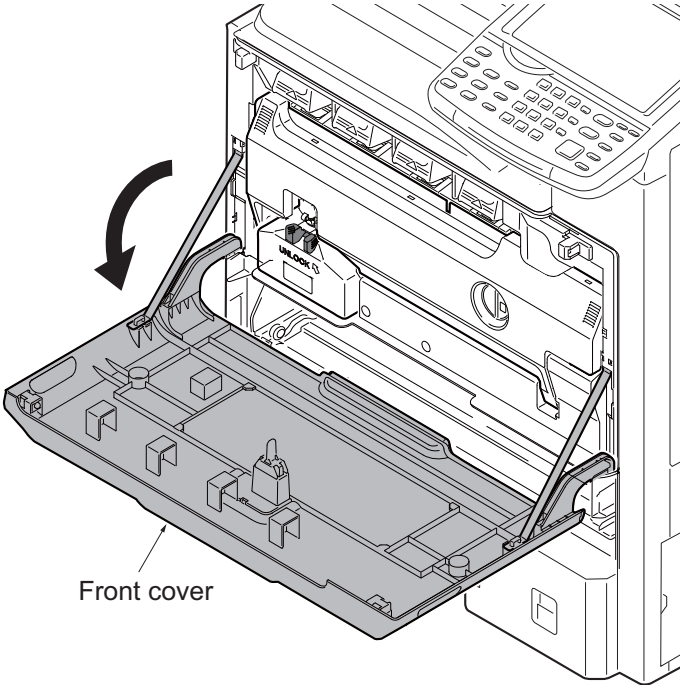

Figure 1-5-3

3. Unhitch the straps by squeezing the hooks inward as shown.

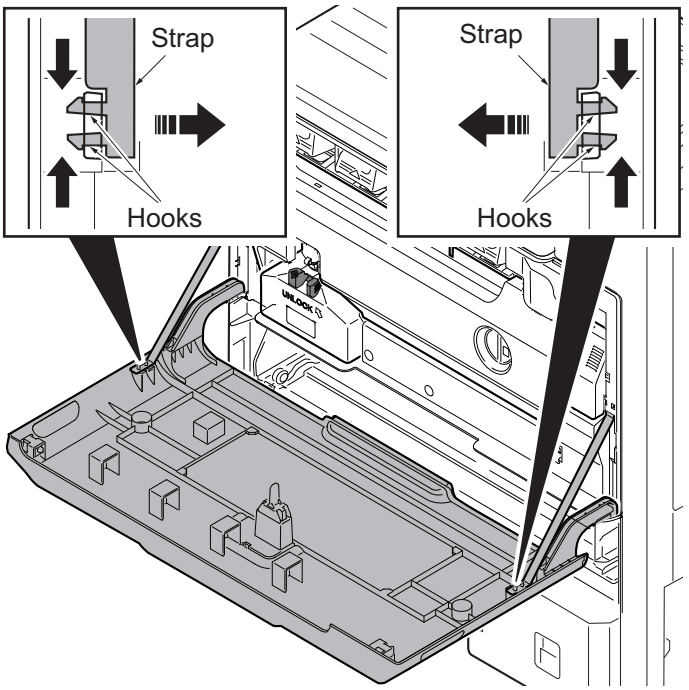

Figure 1-5-4

4. Remove two fulcrum axes of the front cover.
5. Remove the front cover.

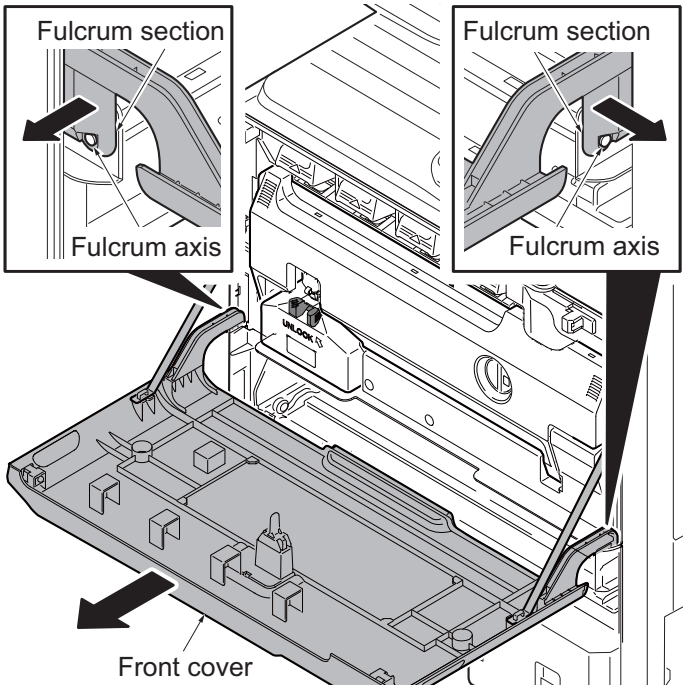

Figure 1-5-5

(2) Detaching and refitting the rear cover

Procedure

1. Remove the power cord.
   If the document finisher is installed, remove its interface connector.
2. Remove two screws of the DP interface connector and then remove the DP interface connector.
3. Remove eight screws.
4. Pull the rear cover upwards and then release three hooks.
5. Remove the rear cover.

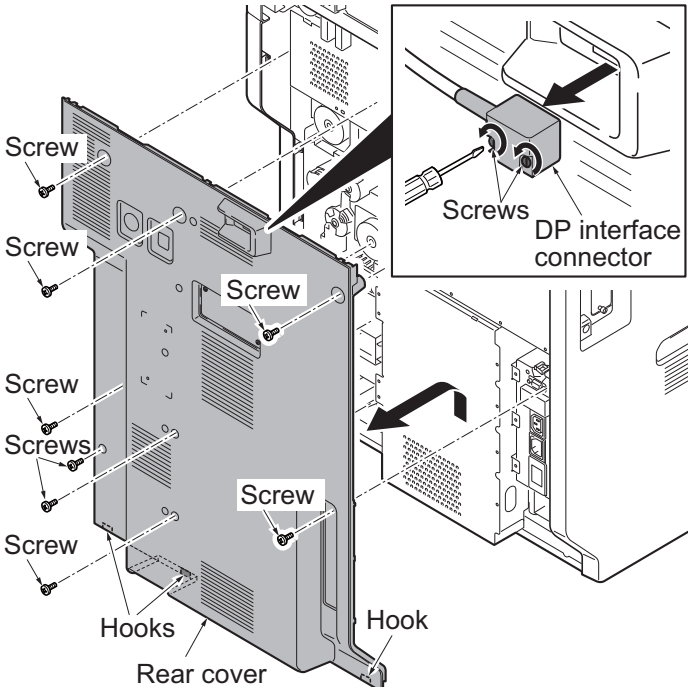

Figure 1-5-6

(3) Detaching and refitting the inner tray

Procedure

1. Release the lock lever and then remove the job separator tray.

   ATTENTION: When refitting the Job separator tray, are cautious of the position of a paper guide.

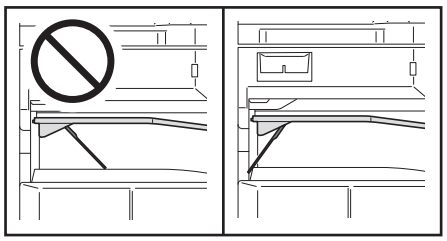

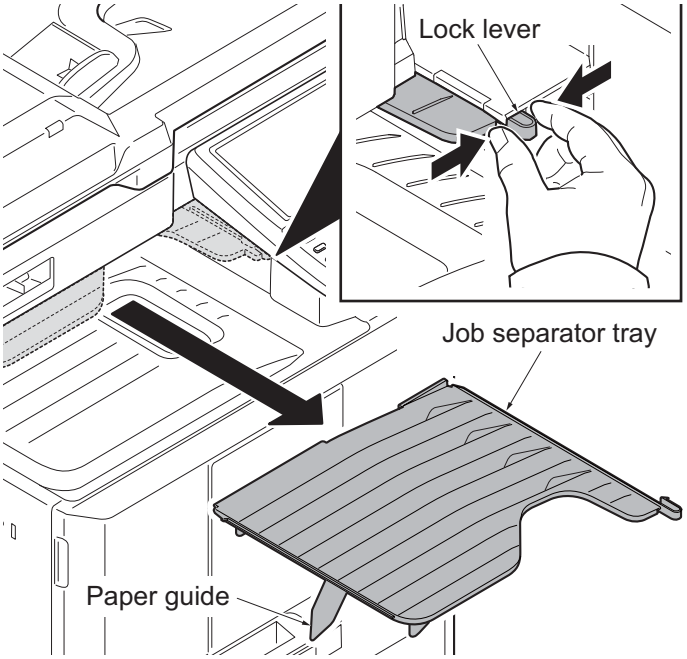

Figure 1-5-7

2. Remove the rear cover. (See page 1-5-5)
3. Remove the cassette. (See page 1-5-9)
4. Open the front cover.
5. Remove four screws.
6. Release seven hooks A.
7. Pull the left lower cover upwards and then release eight hooks B.
8. Remove the left lower cover.

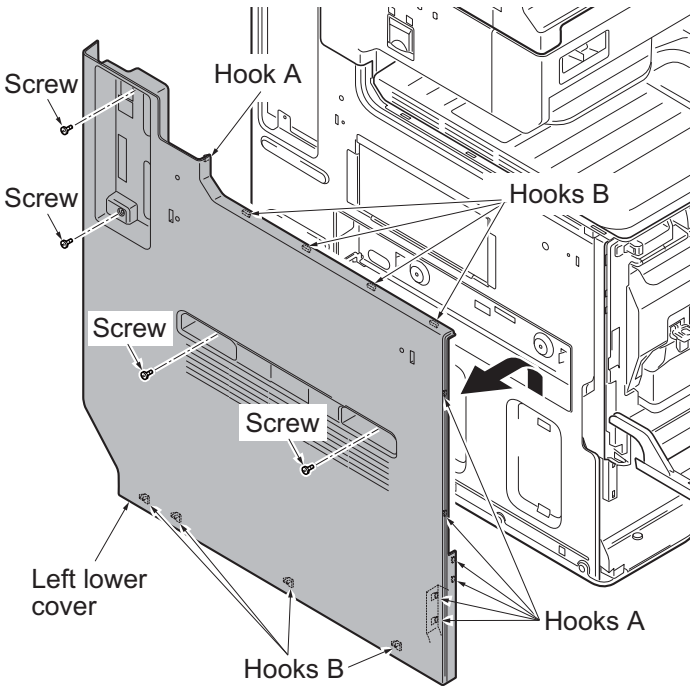

Figure 1-5-8

9. Release the hook of the front upper cover.
10. Tilt the front upper cover forward.

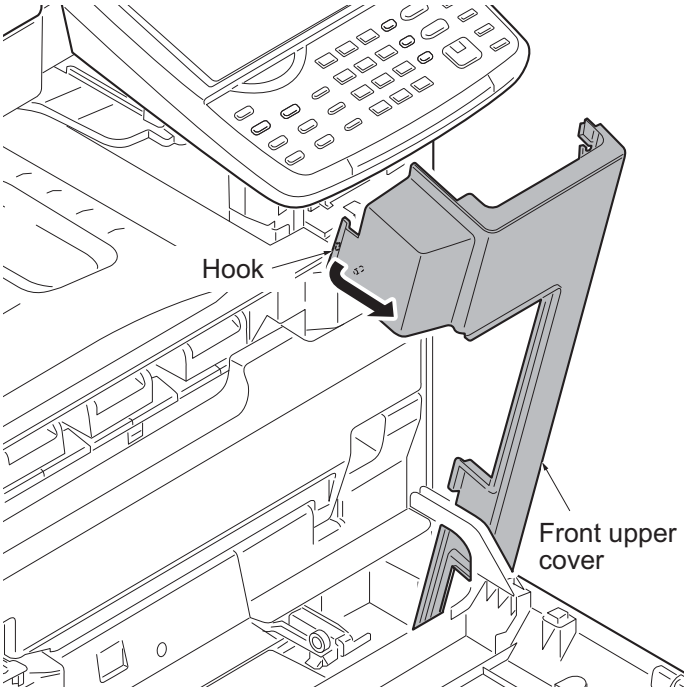

Figure 1-5-9

11. Remove the inner tray.

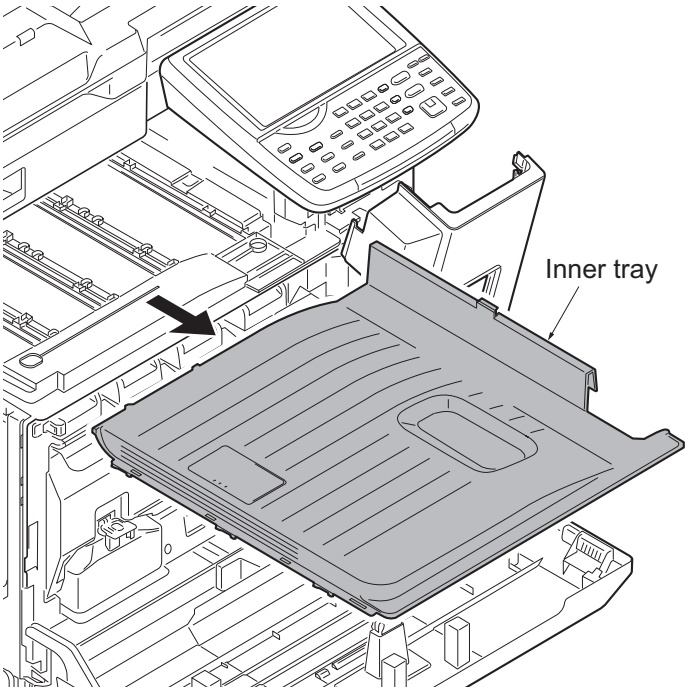

Figure 1-5-10

(4) Detaching and refitting the eject rear cover

Procedure

1. Release two hooks by using a flat screwdriver and then remove the tray left cover.

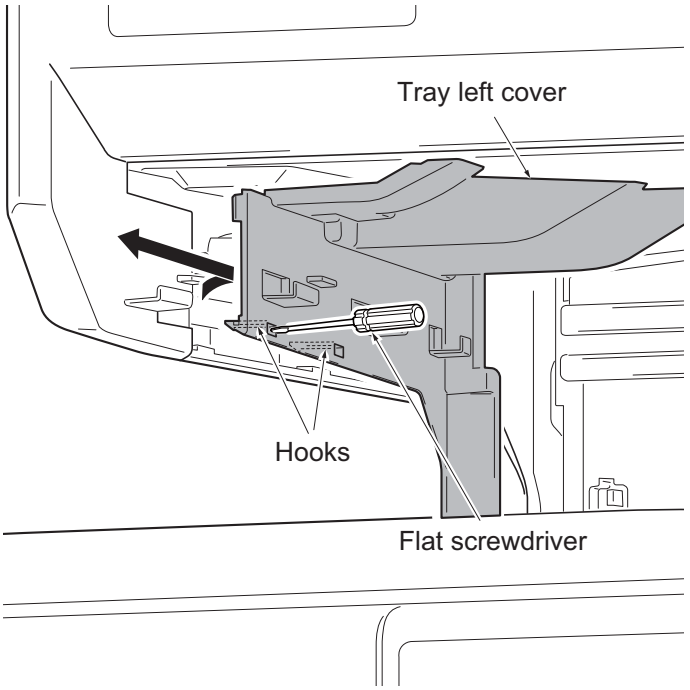

Figure 1-5-11

2. Remove the eject rear cover.

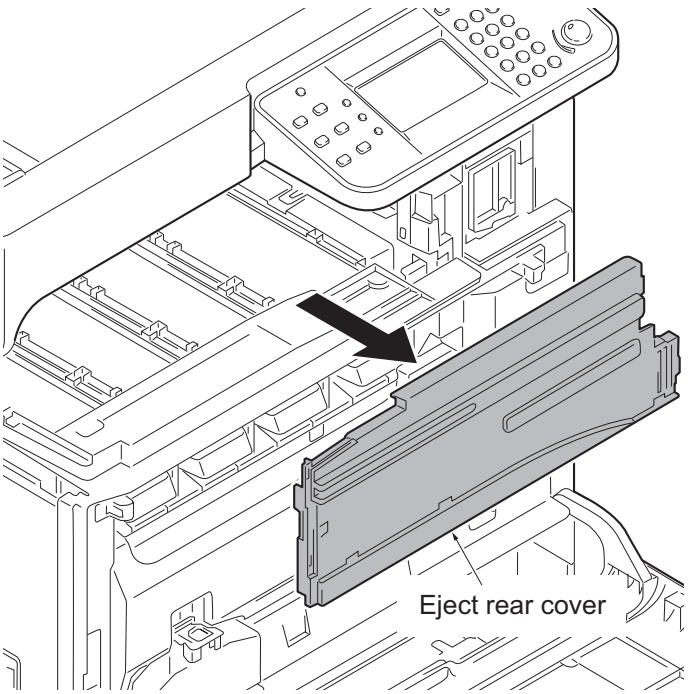

Figure 1-5-12

1-5-3 Paper feed section

(1) Detaching and refitting the primary paper feed unit

Procedure

1. Remove the cassette.

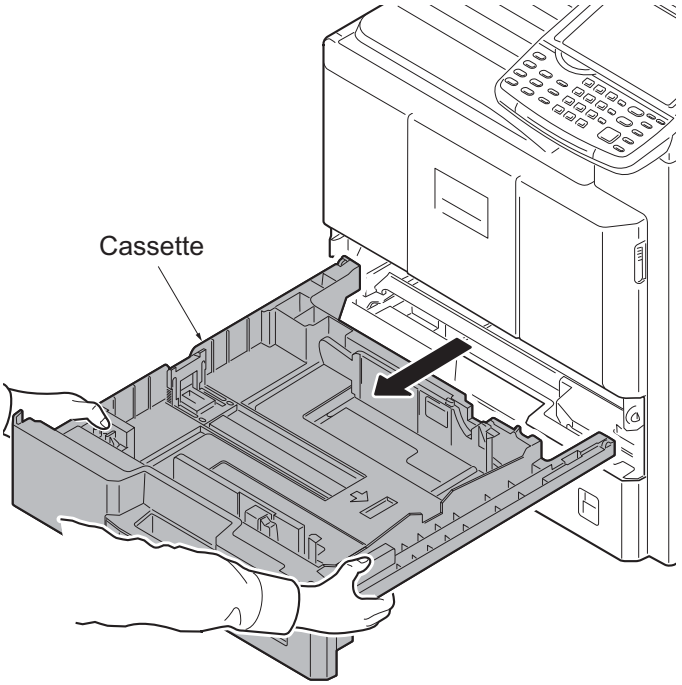

Figure 1-5-13

2. Release the paper feed lever and then remove the primary paper feed unit.
3. Check or replace the primary paper feed unit and refit all the removed parts.
4. When replacing the new unit,proceed as follows:
   1)Performs maintenance mode U901 (Checking copy counts by paper feed locations) (see page 1-3-167).

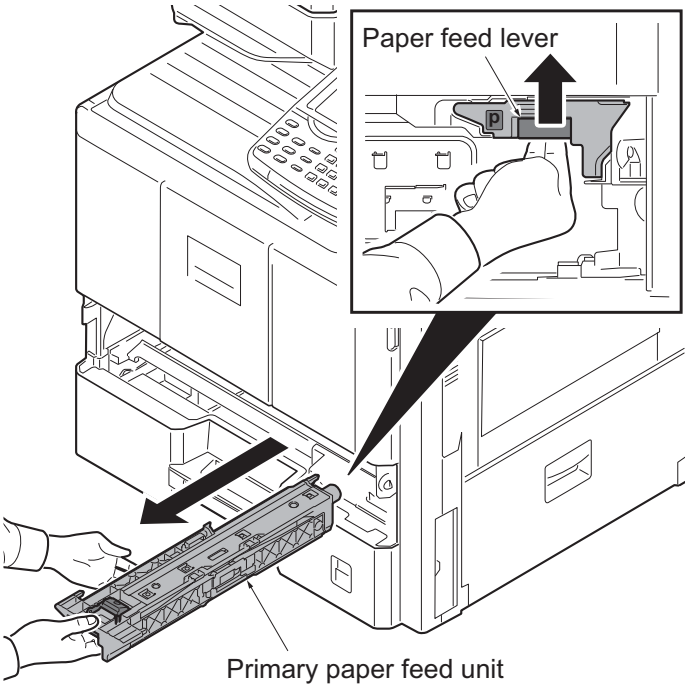

Figure 1-5-14

(2) Detaching and refitting the MP paper feed roller and MP separation pad

Procedure

1. Open the right cover 1.

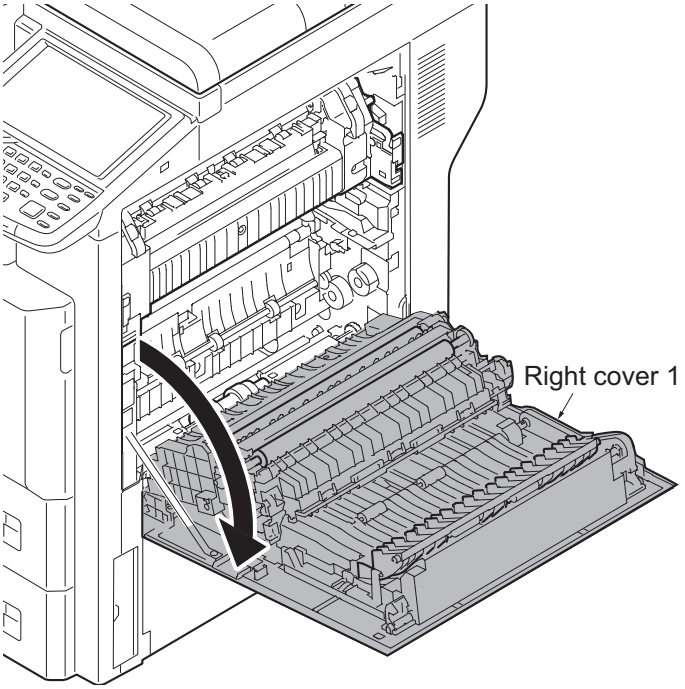

Figure 1-5-15

2. While squeezing the holder inward, remove the MP paper feed roller.

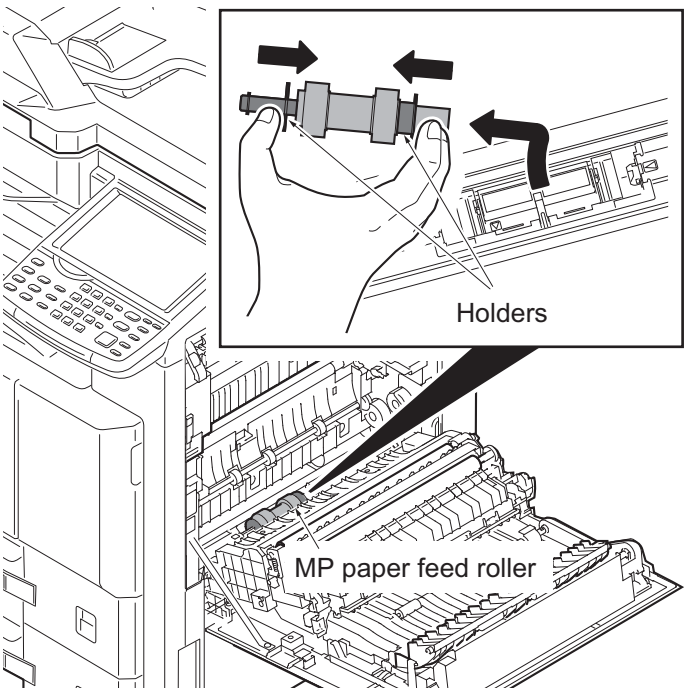

Figure 1-5-16

3. Tilt the MP separation pad forward and then remove it upwards.
4. Check or replace the MP paper feed roller and MP separation pad and refit all the removed parts.
5. When replacing the new parts,proceed as follows:
   1)Performs maintenance mode U901 (Checking copy counts by paper feed locations) (see page 1-3-167).

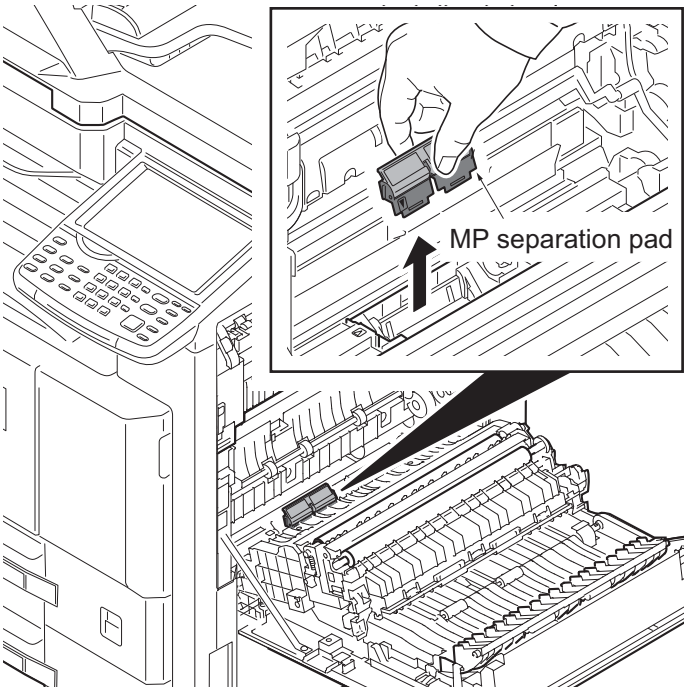

Figure 1-5-17

(3) Detaching and refitting the registration roller

Procedure

1. Open the right cover 1.
2. Remove the transfer roller unit. (See page 1-5-17)
3. Remove two springs at the front and back of the registration roller right.
4. Remove the cap and gear.
5. Slide and remove the registration roller right.
6. Check or replace the registration roller right and refit all the removed parts.

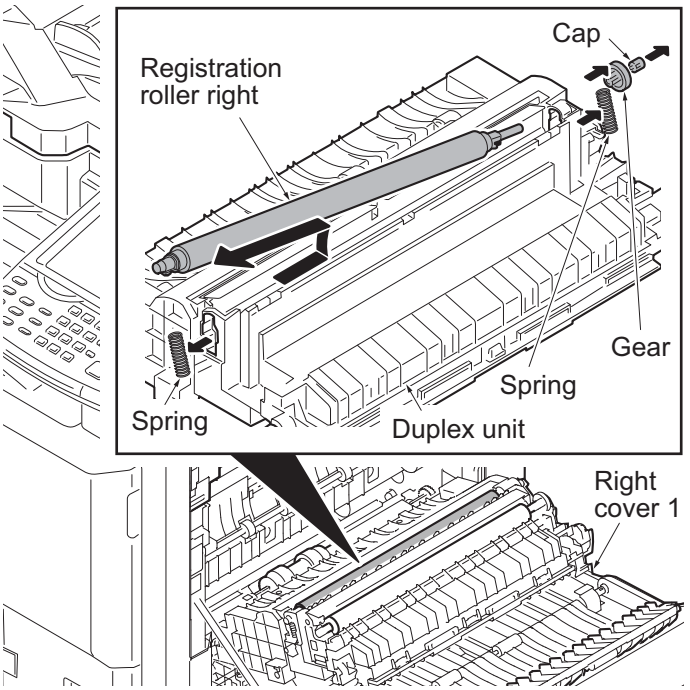

Figure 1-5-18

(4) Detaching and refitting the registration cleaner

Procedure

1. Open the front cover.
2. Open the duct cover. (See page 1-5-15)
3. Set the cleaner lever up and draw the registration cleaner frontward.
4. Check or replace the registration cleaner and refit all the removed parts.

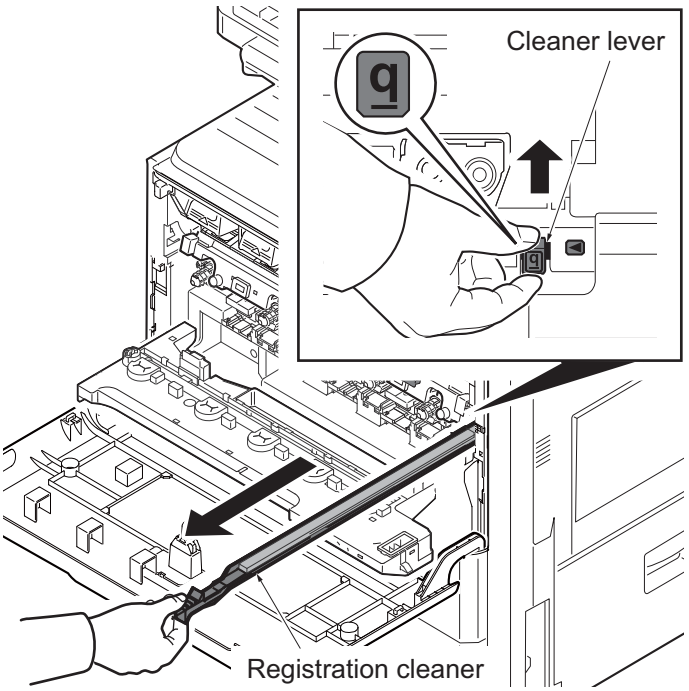

Figure 1-5-19

(5) Detaching and refitting the MP tray

Procedure

1. Open the right cover 1.
2. Remove the MPF wire cover and then remove the connector.
3. Close the right cover 1.

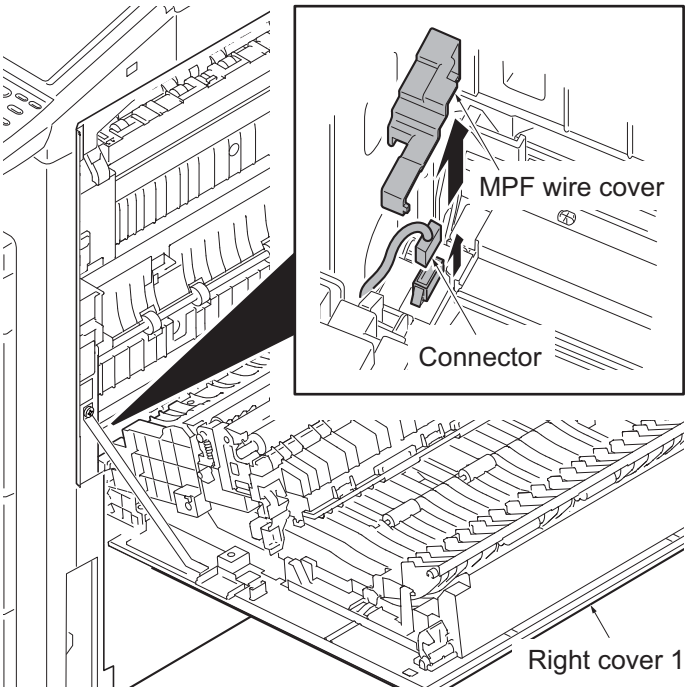

Figure 1-5-20

4. Open the MP tray.
5. Release two fulcrums of the MP tray by using a flat screwdriver.
6. Pull two straps upwards to remove.
7. Remove the MP tray.

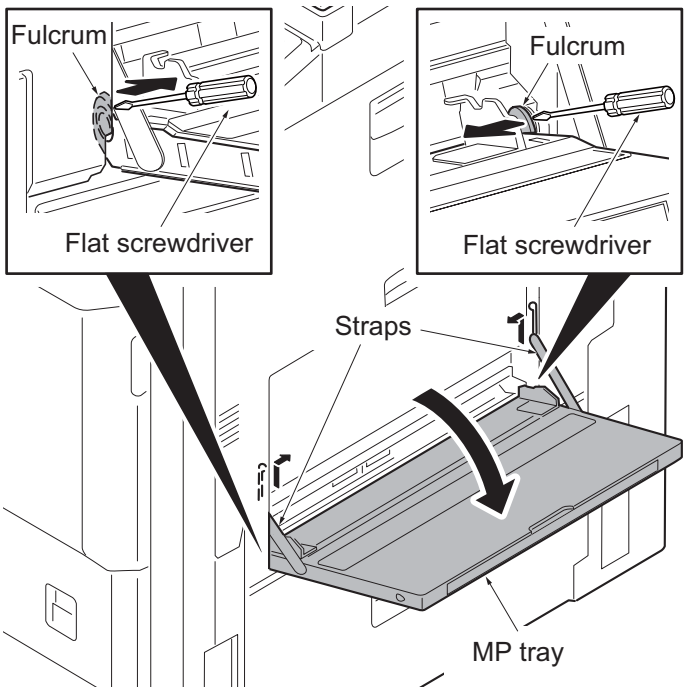

Figure 1-5-21

1-5-4 Developing section

(1) Detaching and refitting the developing unit

Procedure

1. Open the front cover.
2. Release the lock lever and then remove the waste toner box.

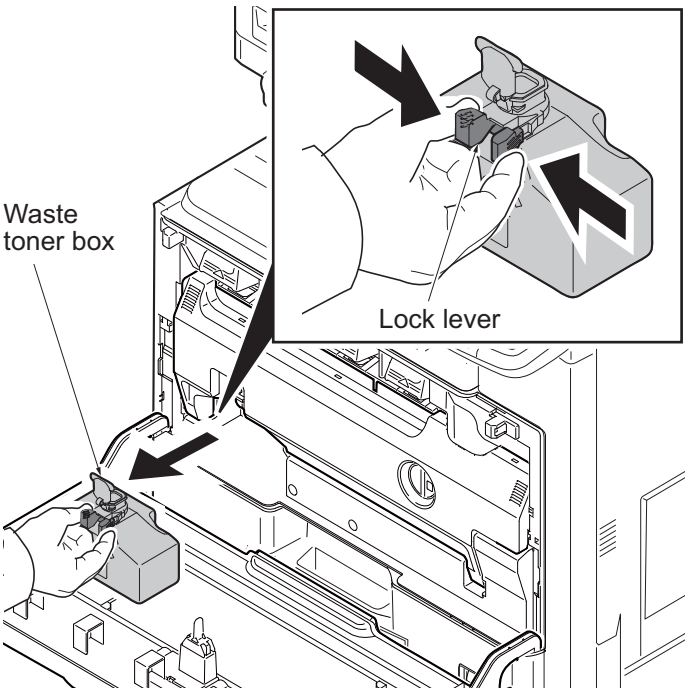

Figure 1-5-22

3. Turn the lock lever to the right using a coin and then knock down the duct cover forwards.

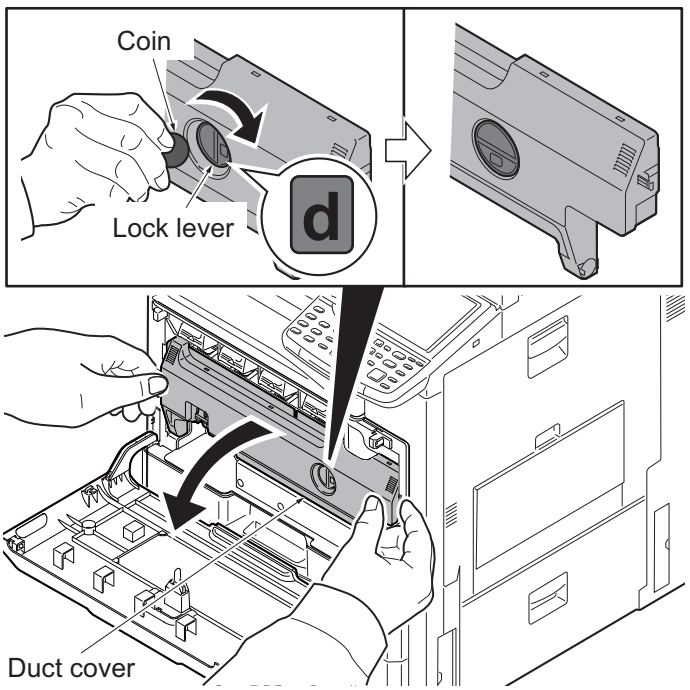

Figure 1-5-23

4. Lift the lever and turn the duct holder upwards.

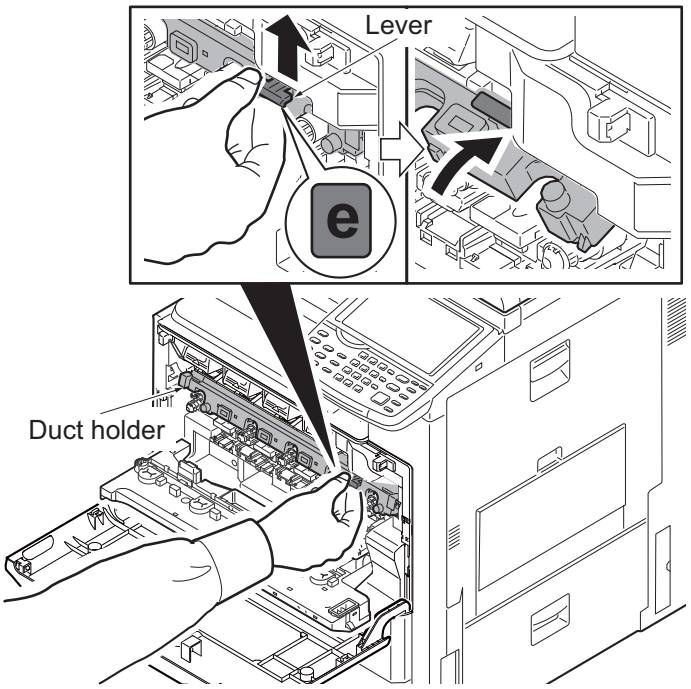

Figure 1-5-24

5. Push the lock lever of the developer unit upwards and then remove the developer unit.
6. Check or replace the developer unit and refit all the removed parts.
7. When replacing the new unit,proceed as follows:
   1)Performs maintenance mode U410 (Adjusting the halftone automatically) (see page 1-3-109).

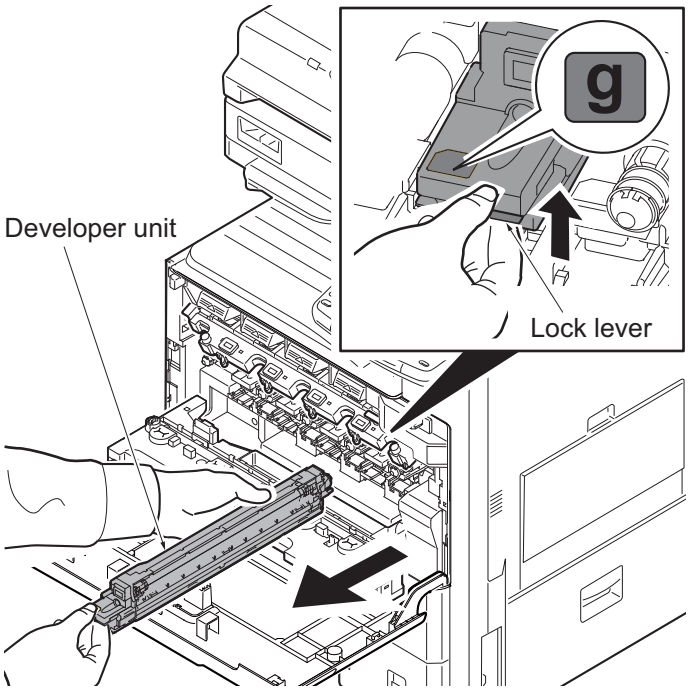

Figure 1-5-25

1-5-5 Drum section

(1) Detaching and refitting the drum unit

Procedure

1. Open the front cover.
2. Release the waste toner box.
   (See page 1-5-14)
3. Turn the lock lever to the right and then knock down the duct cover forwards.
   (See page 1-5-15)
4. Lift the lever and turn the duct holder upwards.(See page1-5-15)
5. Push the lock lever of the drum unit upwards and then remove the drum unit.
6. Check or replace the drum unit and refit all the removed parts.
7. When replacing the new unit,proceed as follows:
   1)Performs maintenance mode U410 (Adjusting the halftone automatically) (see page 1-3-109).

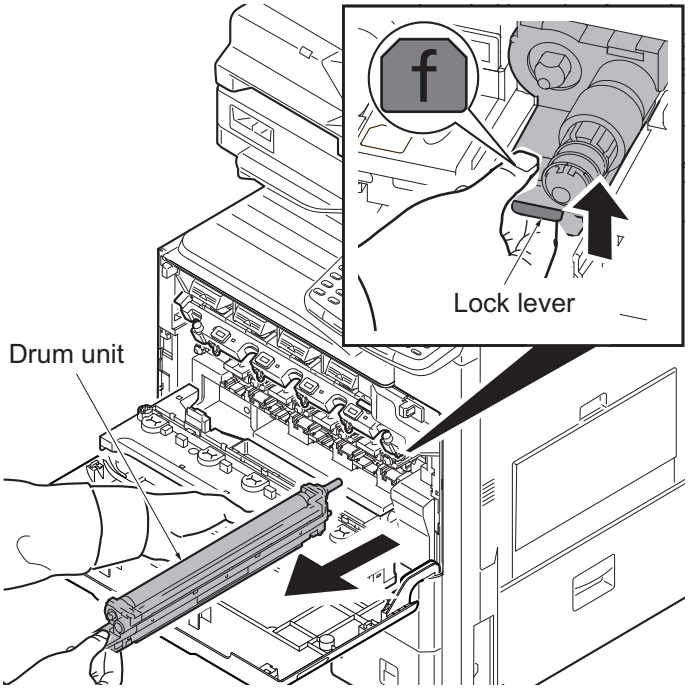

Figure 1-5-26

(2) Detaching and refitting the chager roller unit

Procedure

1. Remove the drum unit.
   (See page 1-5-16)
2. Release two lock levers and then remove the chager roller unit.
3. Check or replace the chager roller unit and refit all the removed parts.

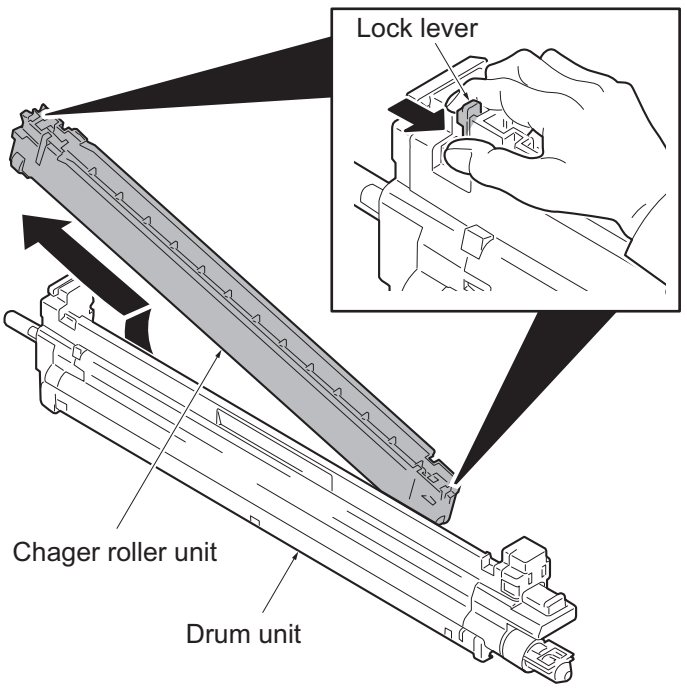

Figure 1-5-27

1-5-6 Transfer/separation section

(1) Detaching and refitting the intermediate transfer unit

Procedure

1. Open the right cover 1.
2. Pull the intermediate transfer unit forwards by holding two knobs A.
3. .Change to the knob B from the knob A and then remove the intermediate transfer unit.
4. Check or replace the intermediate transfer unit and refit all the removed parts.
5. When replacing the new unit,proceed as follows:
   1)Performs maintenance mode U410 (Adjusting the halftone automatically) (see page 1-3-109).

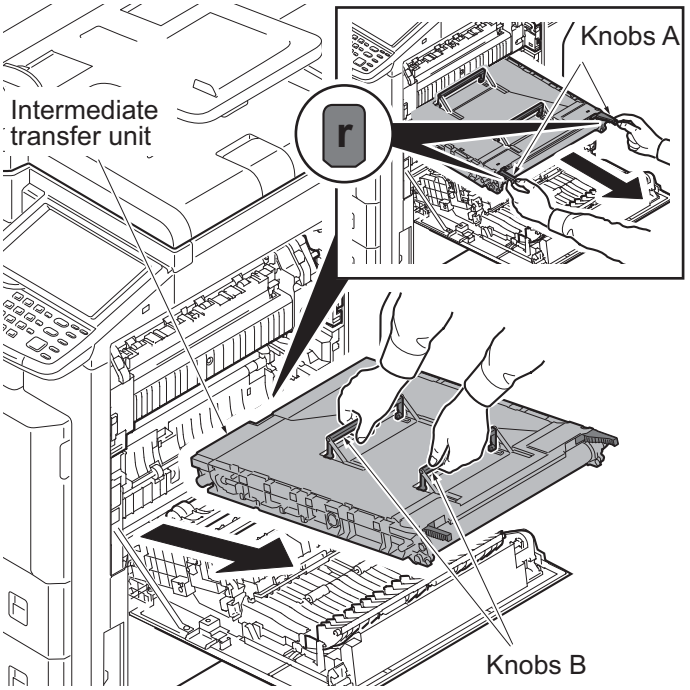

Figure 1-5-28

(2) Detaching and refitting the secondary transfer roller unit

Procedure

1. Open the right cover 1.
2. Release two lock levers and then remove the secondary transfer roller unit.
3. Check or replace the secondary transfer roller unit and refit all the removed parts.
4. When replacing the new unit,proceed as follows:
   1)Performs maintenance mode U127 (Clearing the transfer count) (see page 1-3-69).
   2)Performs maintenance mode U410 (Adjusting the halftone automatically) (see page 1-3-109).

ATTENTION: When refitting the secondary transfer roller unit, insert it in place until it clicks in.

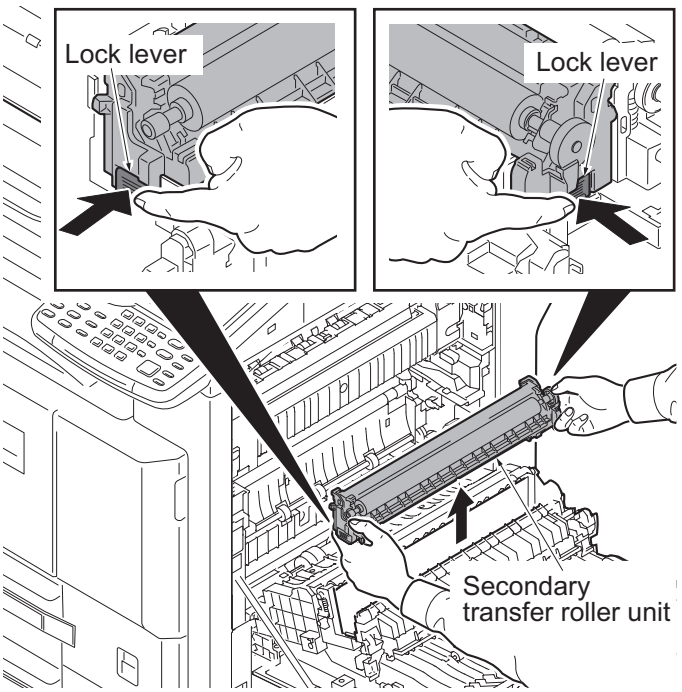

Figure 1-5-29

1-5-7 Fuser section

(1) Detaching and refitting the fuser unit

Procedure

1. Open the right cover 1.
2. Release two mount levers and then pull the fuser unit forwards

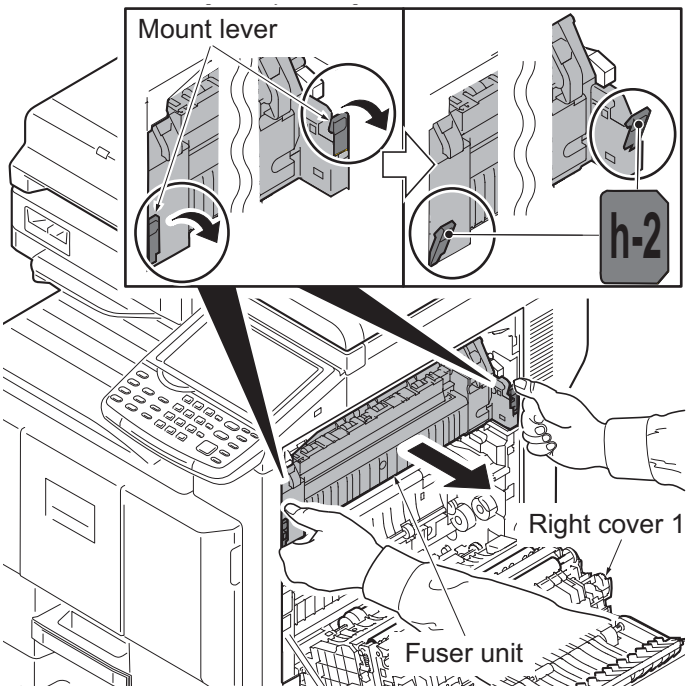

Figure 1-5-30

3. Grip two knobs of the fuser unit.
4. Lift the fuser unit upwards and then remove the fuser unit.
5. Check or replace the fuser unit and refit all the removed parts.
6. When replacing the new unit,proceed as follows:
   1)Performs maintenance mode U410 (Adjusting the halftone automatically) (see page 1-3-109).

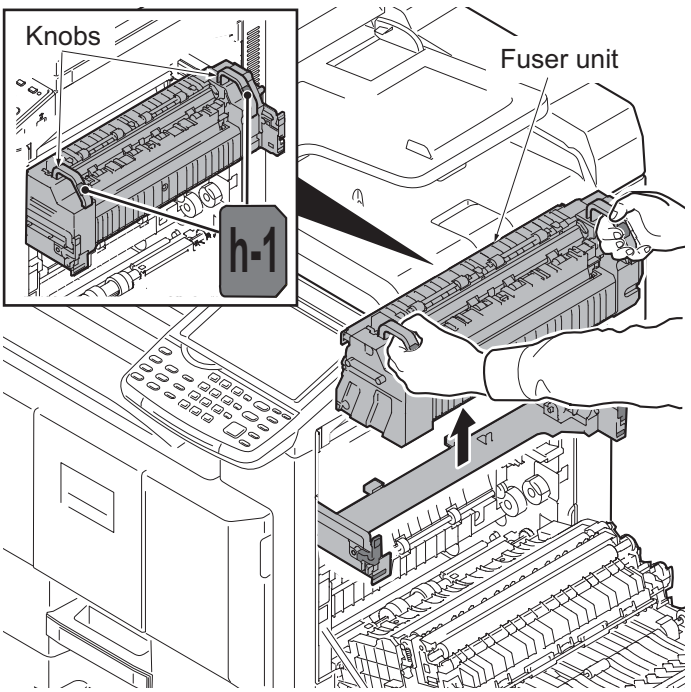

Figure 1-5-31

1-5-8 Drive section

(1) Detaching and refitting the drive unit 1

Procedure

1. Remove the rear cover.
   (See page 1-5-5)
2. Remove the connector.
3. Remove four screws and then remove the drive unit 1.
4. Check or replace the drive unit 1 and refit all the removed parts.

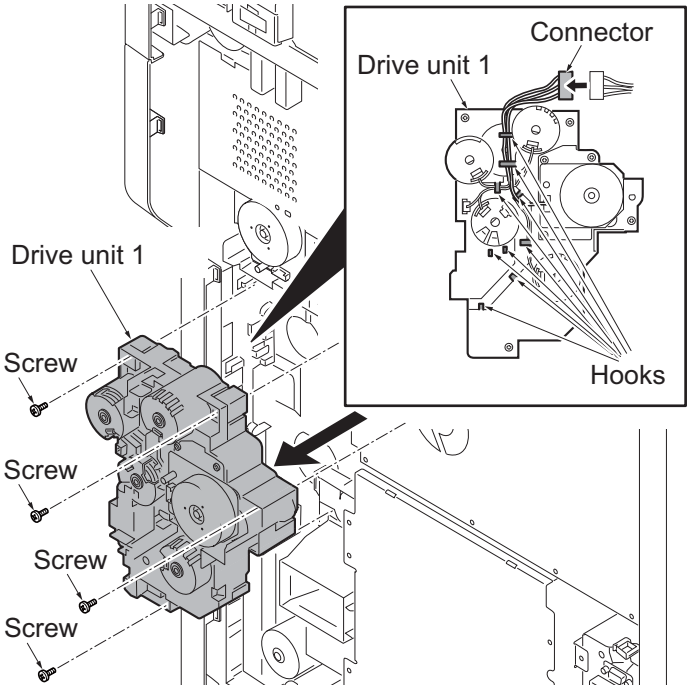

Figure 1-5-32

NOTE: When refitting the drive unit 1, checks that the position of a cam is in the A side from the upper limit line.
NOTE: When cam isn't in the A side from the upper limit line, turn the motor by hand and bring the cam into the A side.

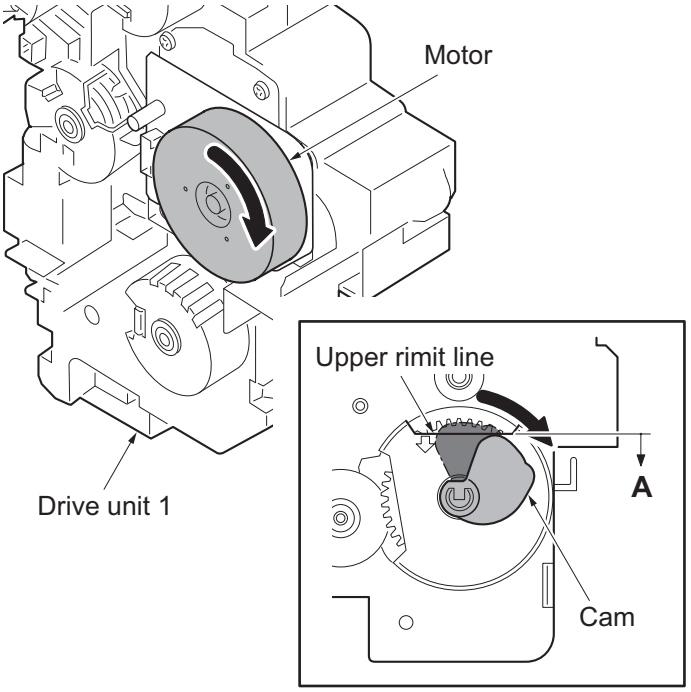

Figure 1-5-33

(2) Detaching and refitting the drive unit 2

Procedure

1. Remove the rear cover.
   (See page 1-5-5)
2. Remove five connectors.
3. Remove four screws and then remove the drive unit 2.
4. Check or replace the drive unit 2 and refit all the removed parts.

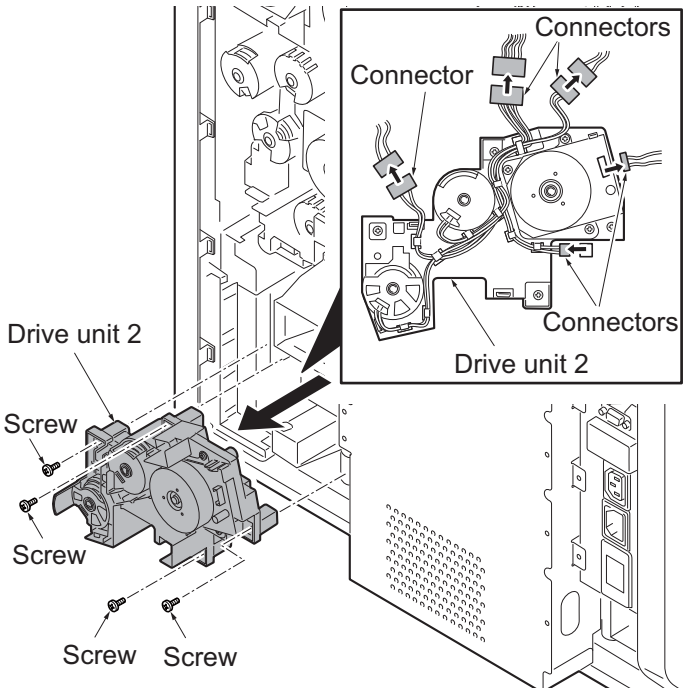

Figure 1-5-34

(3) Detaching and refitting the drive unit 3

Procedure

1. Remove the rear cover.
   (See page 1-5-5)
2. Remove two connectors.
3. Remove two wire holders and then release the wires.
4. Remove four screws.
5. Release the hook and remove the drive unit 3.
6. Check or replace the drive unit 3 and refit all the removed parts.

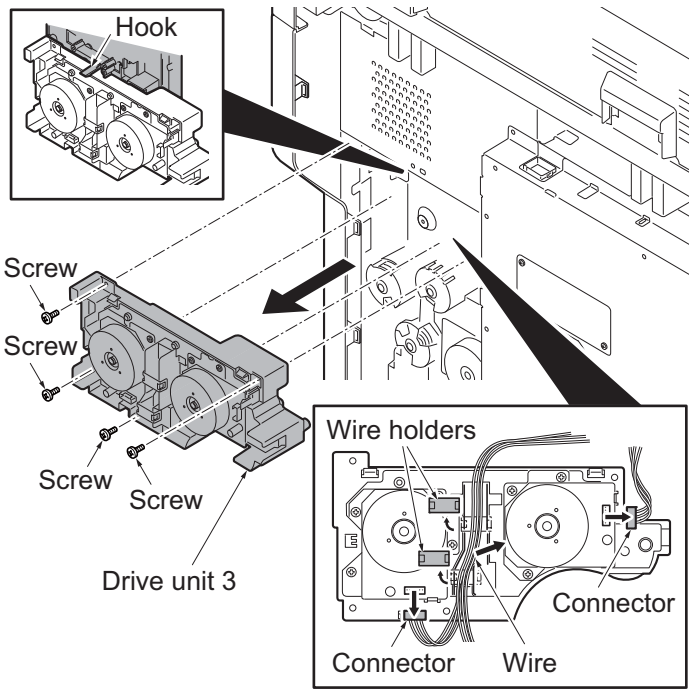

Figure 1-5-35

1-5-9 Optical section

(1) Detaching and refitting the laser scanner unit

Procedure

1. Remove the cassette.
   (See page 1-5-9)
2. Remove the rear cover and left lower cover.(See page 1-5-5,1-5-6)
3. Remove two connectors.
4. Remove four screws and then remove the laser scanner unit assy by pulling it forwards.

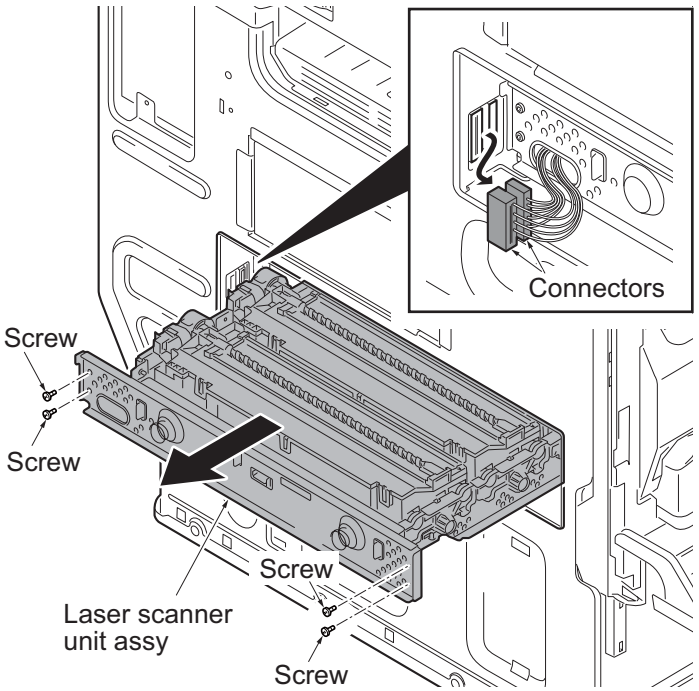

Figure 1-5-36

5. Release the clamp and then remove the FFC from the connector.
6. Remove two screws.
7. Remove the pin and spring and then remove the unit holder Y.
8. Lift the laser scanner unit Y upwards and then remove the laser scanner unit Y (LSU-Y).
9. Similarly, remove the laser scanner unit C/M/K(LSU-C/M/K).
10. Check or replace the laser scanner unit and refit all the removed parts.

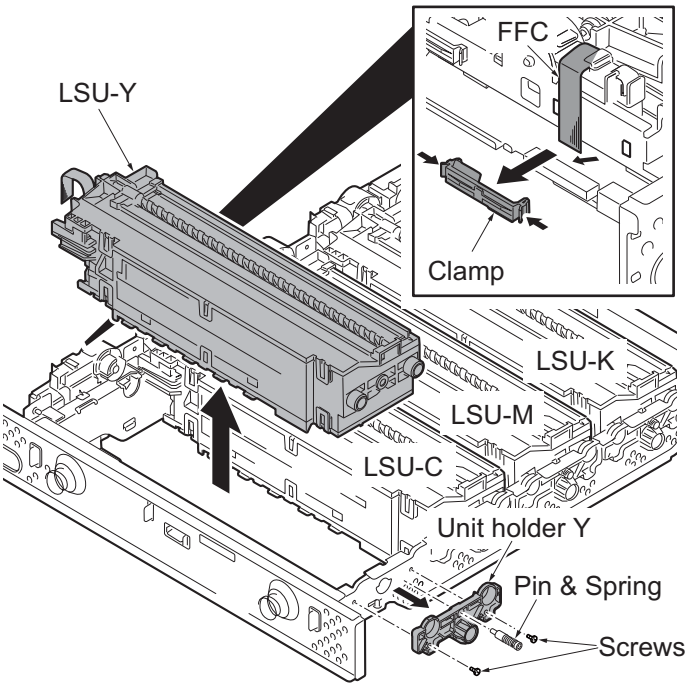

Figure 1-5-37

(2) Detaching and refitting the image scanner unit

Procedure

1. Remove the DP. (See page 1-5-28)
2. Remove two screws and then remove the scanner right cover.

   ATTENTION: To reinstall the scanner right cover, position it close to the platen.

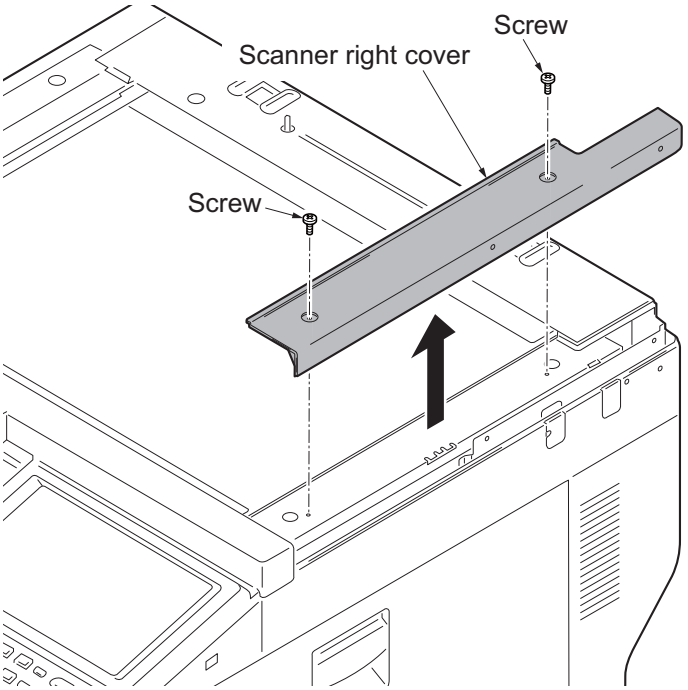

Figure 1-5-38

3. Remove the platen by pull rightward.

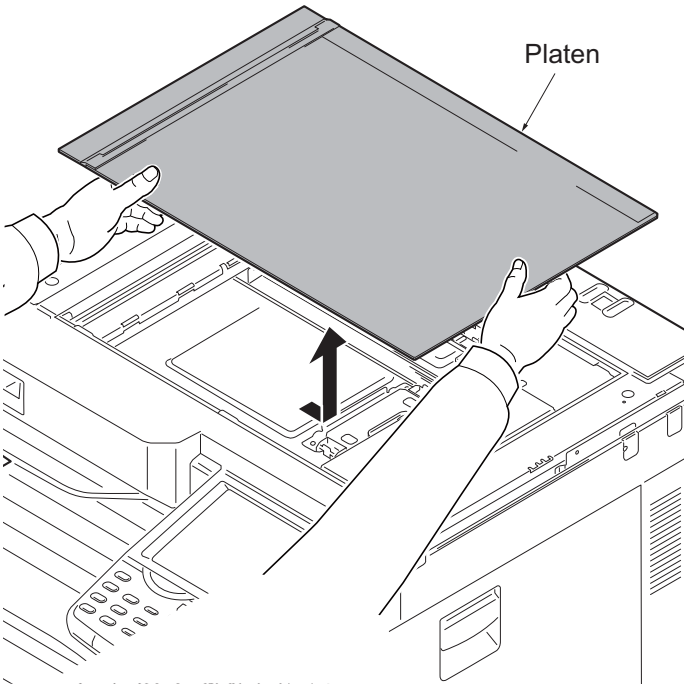

Figure 1-5-39

4. Remove five screws and then remove the scanner cover.

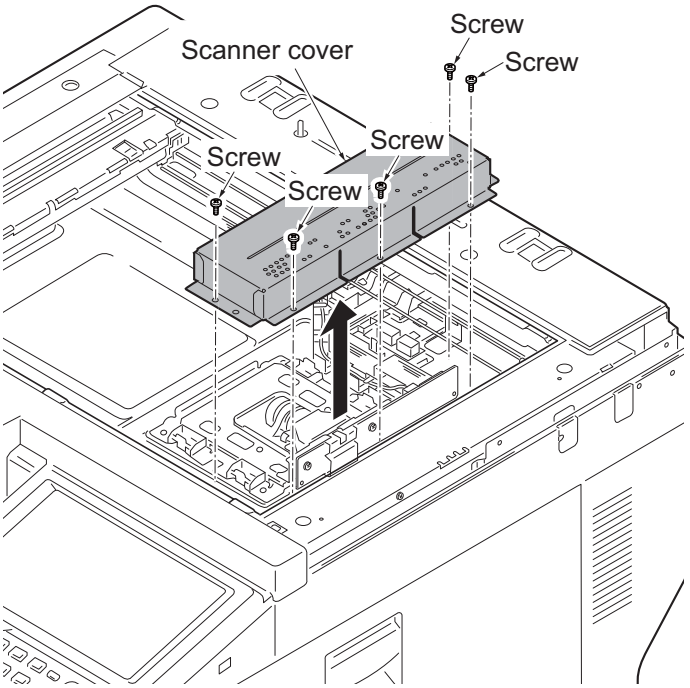

Figure 1-5-40

5. Remove the FFC and the connector.
6. Remove four screws and then remove the image scanner unit.

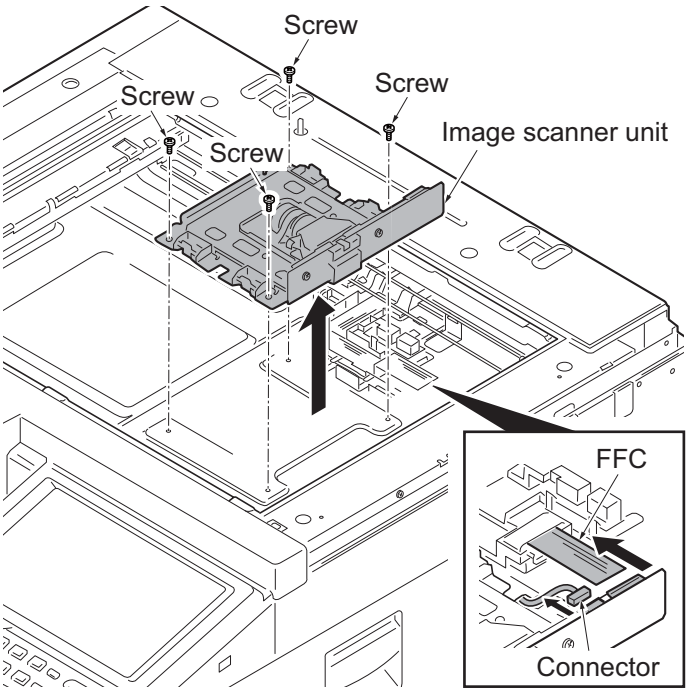

Figure 1-5-41

Refitting the ISU

7. When re-installation, fix the image scanner unit by matching to the scale of a former position.

   When exchange, decide the fix position of ISU by the following.

   The right and left of machine:
   Confirm the number marked (a) and then match the line (c) of ISU to the positioning line (b) of same number on frame side.
   (Line (c) is the one which is marked with the appropriate number.)

   The rear and front of machine:
   Match the edge (e) of ISU to the positioning line (d) on frame side.

8. Fix the ISU as before with four screws.
9. Check or replace the image scanner unit and refit all the removed parts.

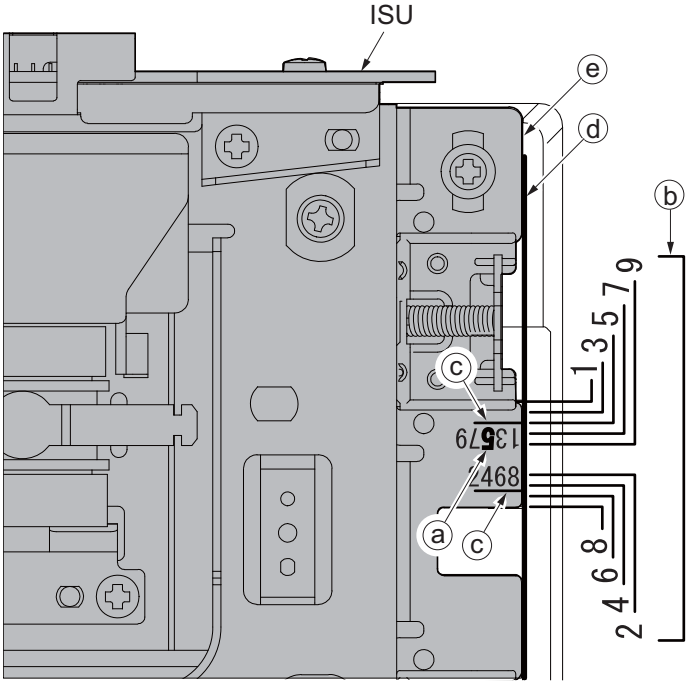

Figure 1-5-42

(3) Detaching and refitting the LED unit

Procedure

1. Remove the sanner right cover and platen.(See page 1-5-22)
2. Remove two screws and then remove the ISU rear cover.
3. Remove the rear cover.

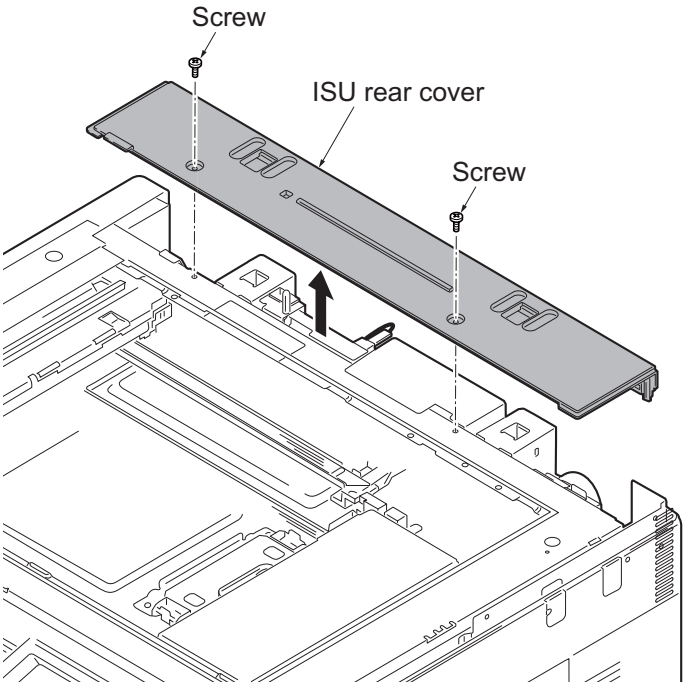

Figure 1-5-43

4. Remove the ISU front cover.

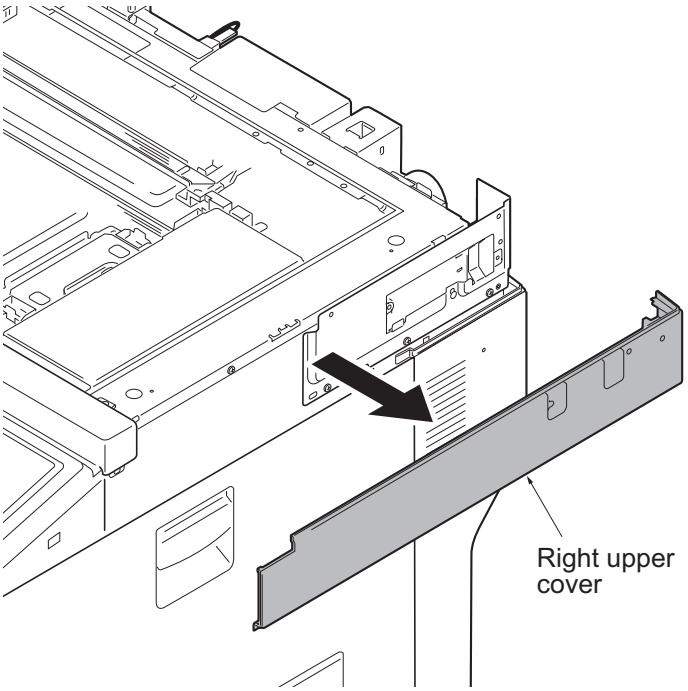

Figure 1-5-44

5. Unhook five hooks and then remove the ISU front cover.

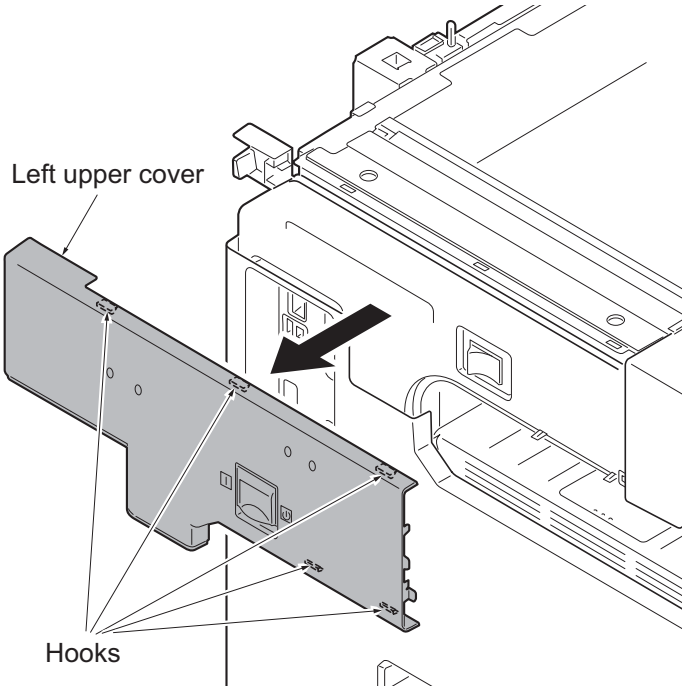

Figure 1-5-45

6. Remove the job separator tray.
7. Remove the operation panel unit.
8. Remove the ISU front cover.

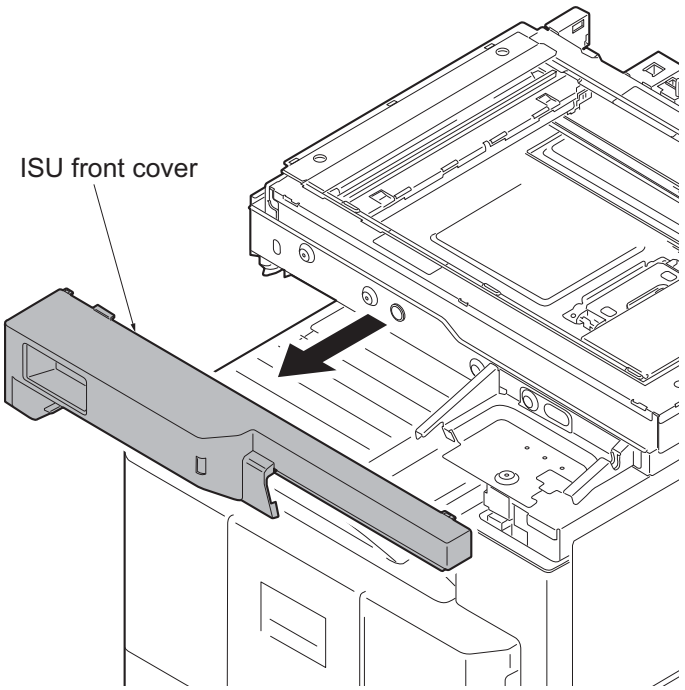

Figure 1-5-46

9. Move the exposure unit to the cutting lack part.
10. Peel off the sheet.
11. Release the hook and then remove the FFC cover.

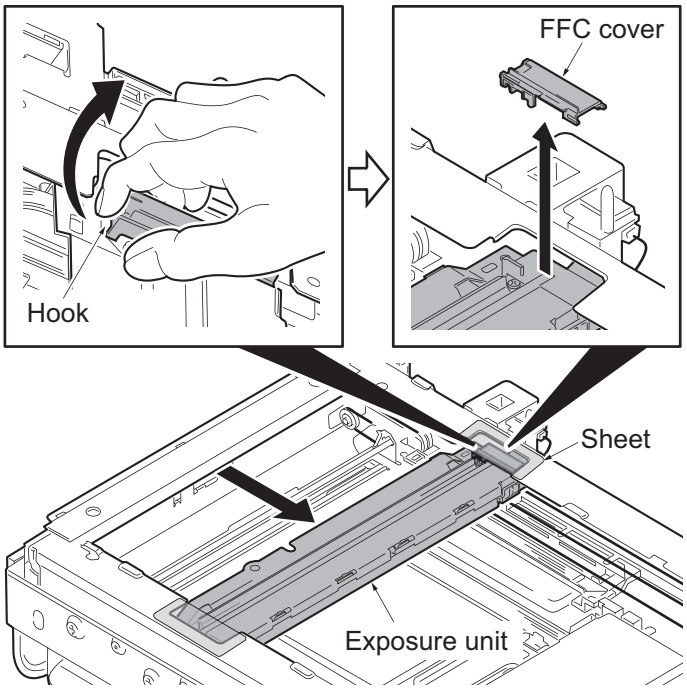

Figure 1-5-47

12. Remove the FFC from the connector.
13. Remove two screws and then remove the LED unit.
14. Check or replace the LED unit and refit all the removed parts.

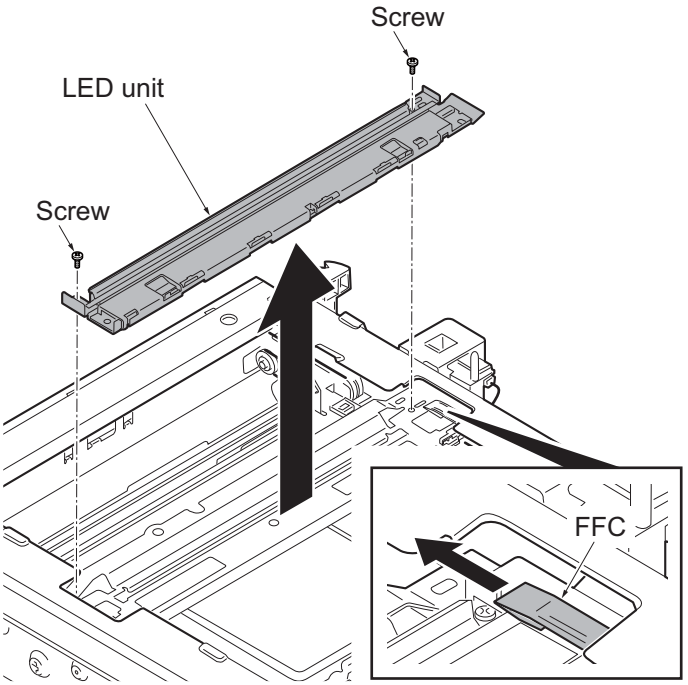

Figure 1-5-48

1-5-10 Document processor

(1) Detaching and refitting the document processor

Procedure

1. Remove the restriction parts.
2. Open the document processor on vertically.

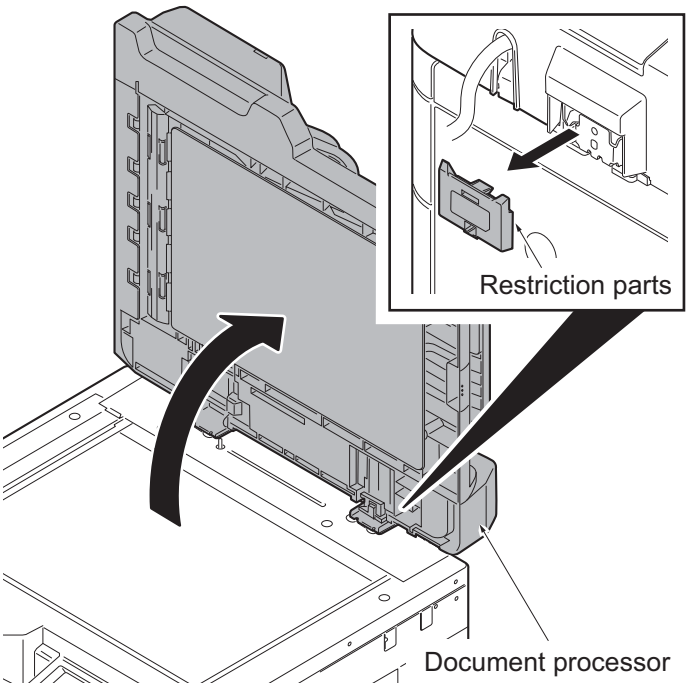

Figure 1-5-49

3. Remove two screws and then remove the DP interface connector.
4. Pull the document processor upwards out.

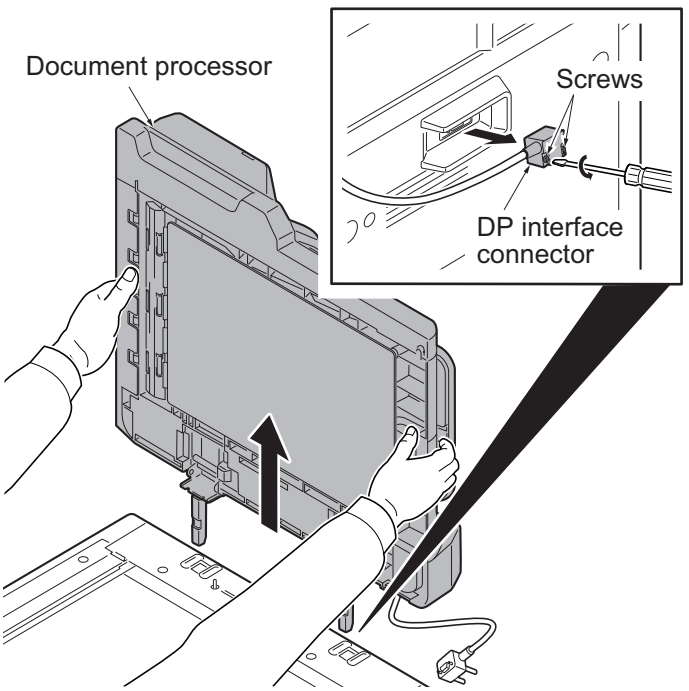

Figure 1-5-50

(2) Detaching and refitting the DP paper feed roller and DP separation pulley

Procedure

1. Open the DP top cover.

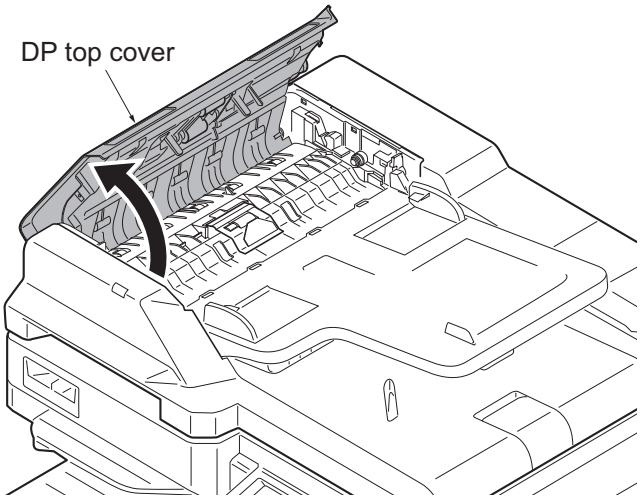

Figure 1-5-51

2. Pull the DP paper feed lever down and then open it.
3. Knock the DP paper feed roller down forward.

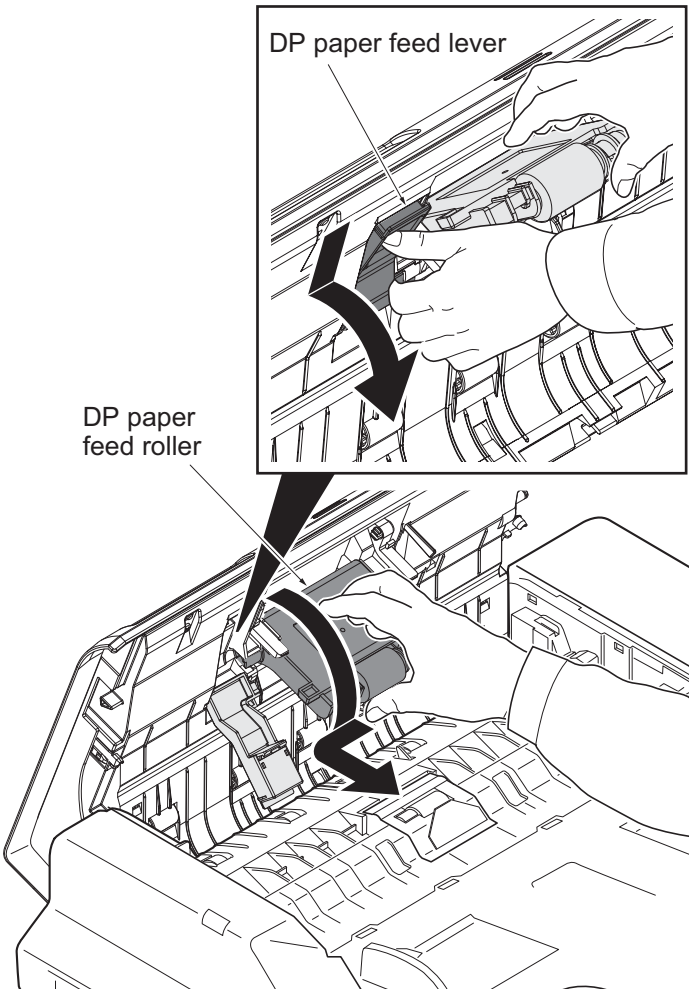

Figure 1-5-52

4. Release the hook and then remove DP separation pulley cover.

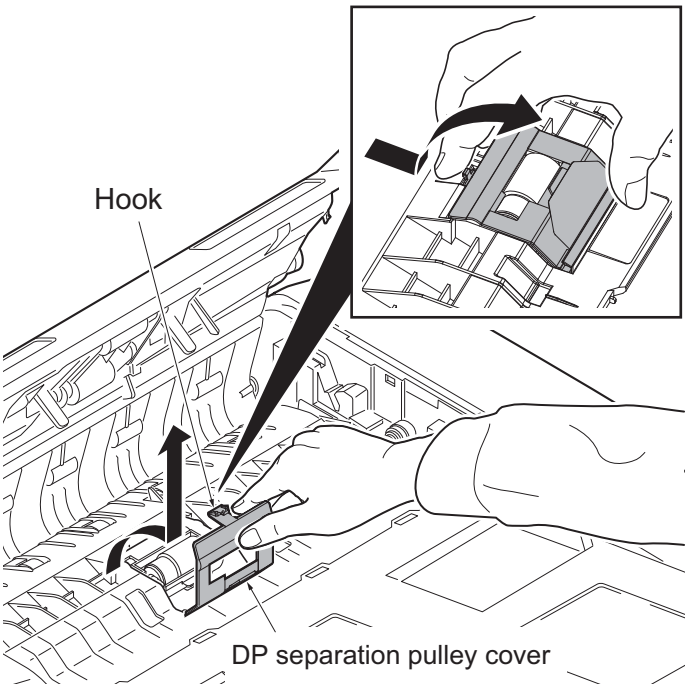

Figure 1-5-53

5. Raise the DP separation pulley and remove it by pulling upward.
6. Check or replace the DP paper feed roller and DP separation pulley and refit all the removed parts.

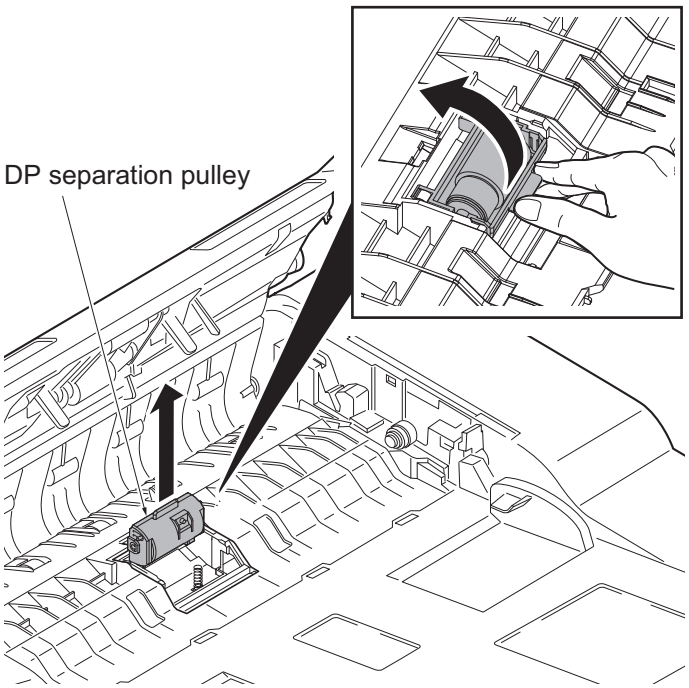

Figure 1-5-54

(3) Detaching and refitting the DP main PWB

Procedure

1. Open the document processor.
2. Release three hooks of the DP rear cover.

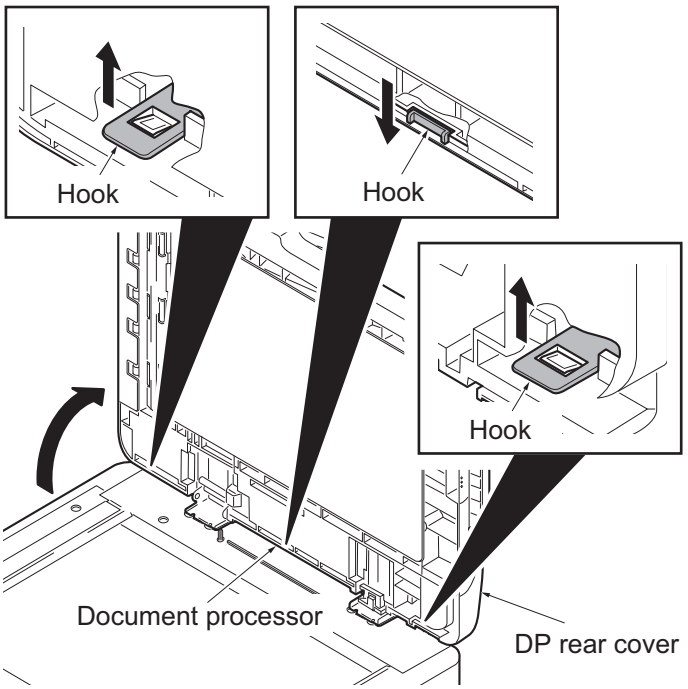

Figure 1-5-55

3. Release two hooks of the DP rear cover and then remove it.

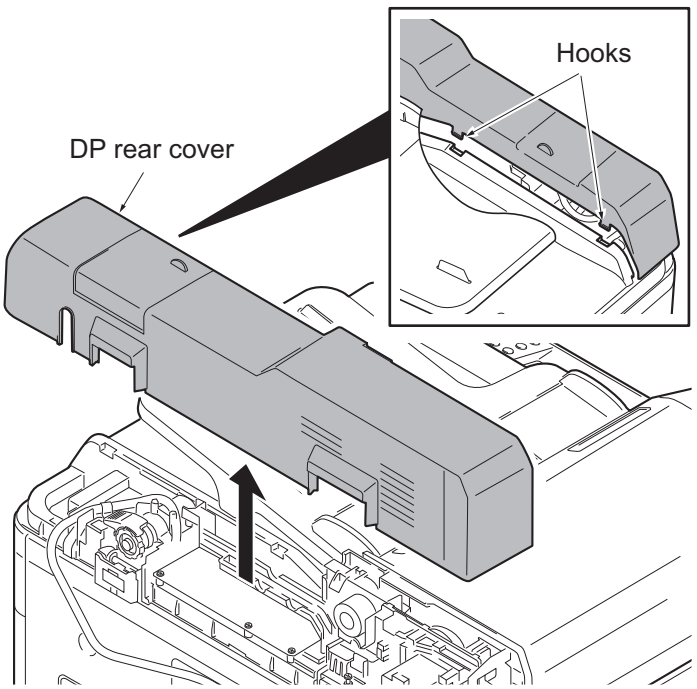

Figure 1-5-56

4. Remove all connectors from DP main PWB.
5. Remove five clamps and then remove the waires from holder.
6. Remove two screws and then remove the holder.

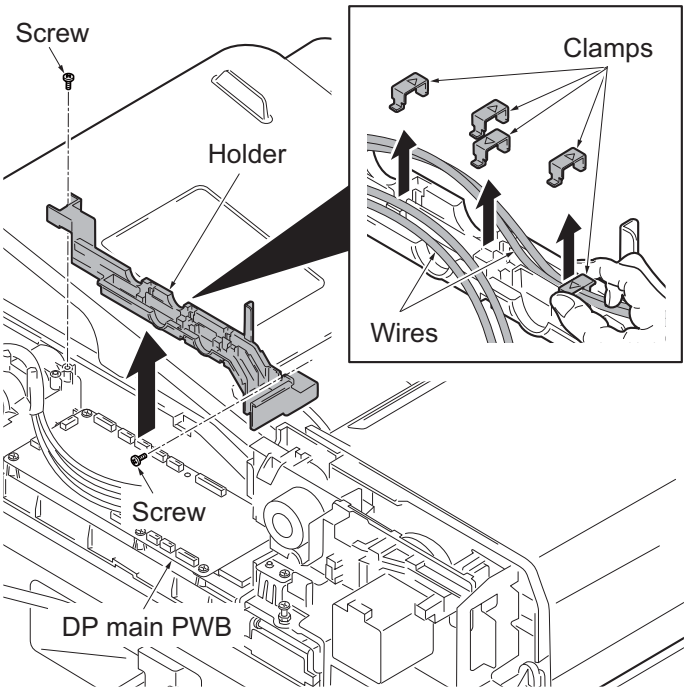

Figure 1-5-57

7. Remove six screws and then remove the DP main PWB.
8. Check or replace the DP main PWB and refit all the removed parts.

   CAUTION: When replacing the DP main PWB, remove the EEPROM from the DP main PWB that has been removed and then reattach it to the new DP main PWB.

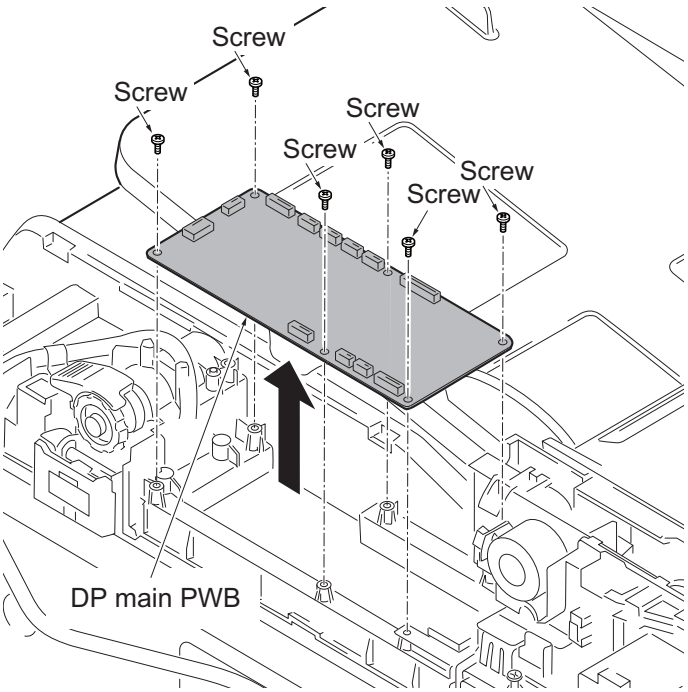

Figure 1-5-58

1-5-11 PWBs

(1) Detaching and refitting the main PWB

Procedure

1. Remove the rear cover.
   (See page 1-5-5)
2. Remove fifteen screws and then remove the controller box cover.

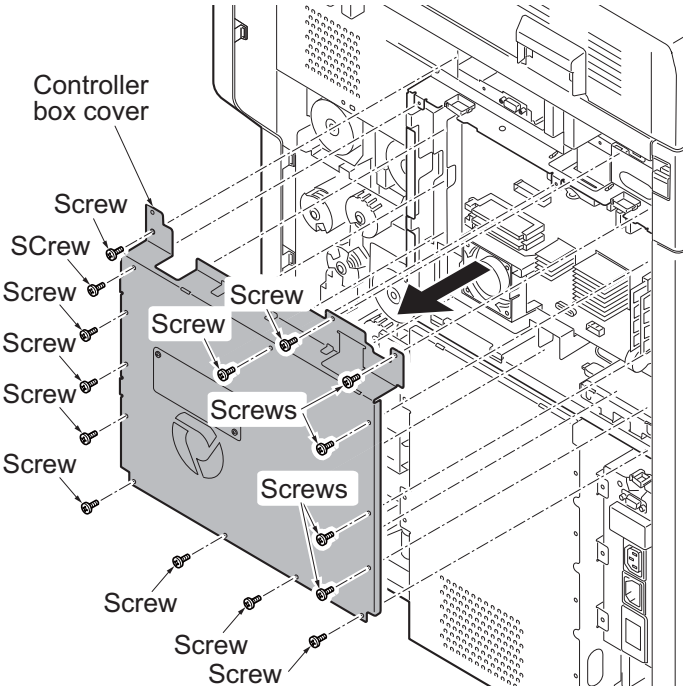

Figure 1-5-59

3. Remove five connectors and FFC for the main PWB.
4. Remove six wire holders and then release the wires and the FFC.
5. Remove the connector of controller fan motor from the main PWB.
6. Unhook two hooks of wire guide and then remove the wire guide from the controller box.

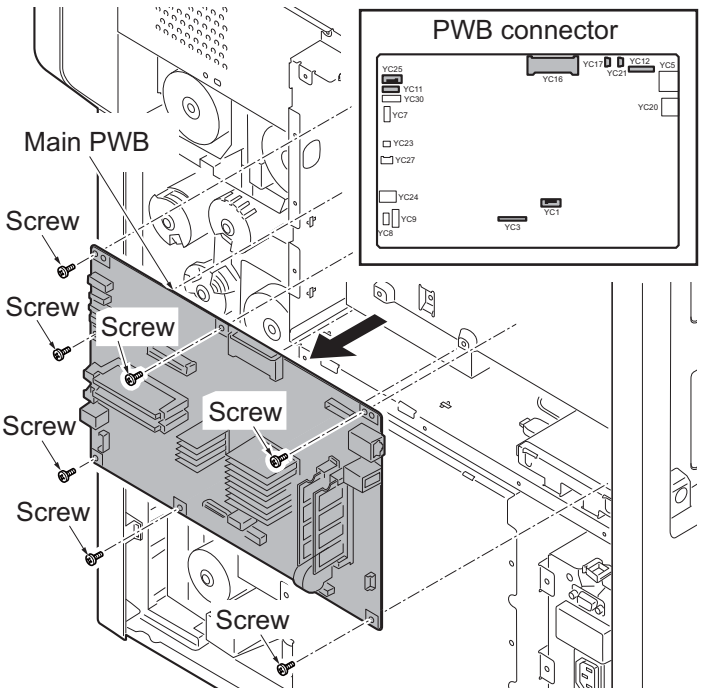

Figure 1-5-60

7. Remove all connectors and FFC from the main PWB.
8. Remove seven screws and then remove the main PWB.
9. Check or replace the main PWB and refit all the removed parts.

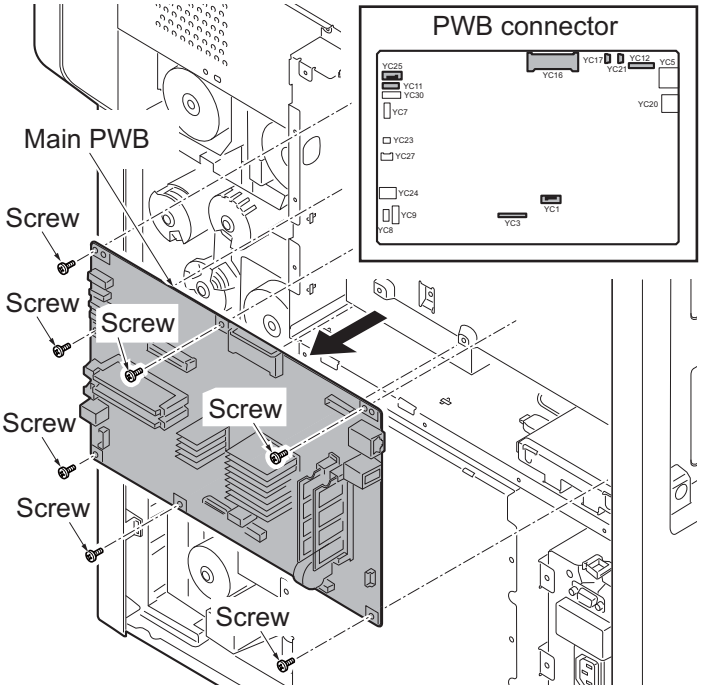

Figure 1-5-61

(2) Detaching and refitting the engine PWB

Procedure

1. Remove the rear cover.
   (See page 1-5-5)
2. Remove fifteen screws and then remove the controller box cover.

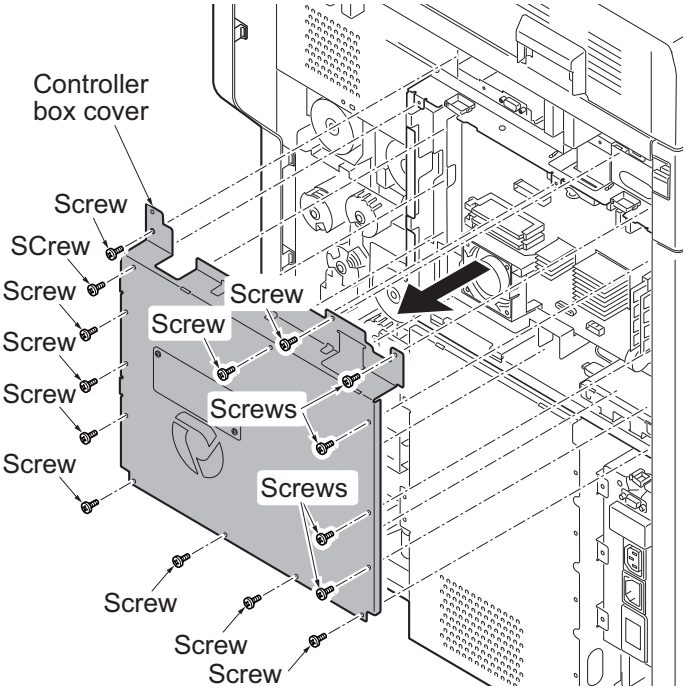

Figure 1-5-62

3. Remove five connectors and the FFC from the main PWB.
4. Remove six wire holders and then release the wires and the FFC.
5. Remove the connector of the controller fan moutor from the main PWB.
6. Remove two hooks of the wire guide and then remove the wire guide from the controller box.

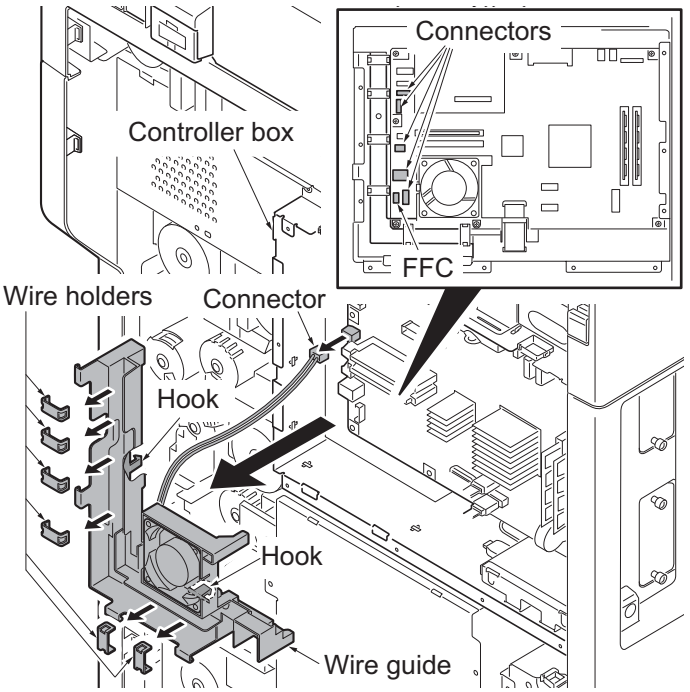

Figure 1-5-63

7. Remove four screws.
8. Release seven hooks A.
9. Pull the left lower cover upwards and release eight hooks B.
10. Remove the left lower cover.

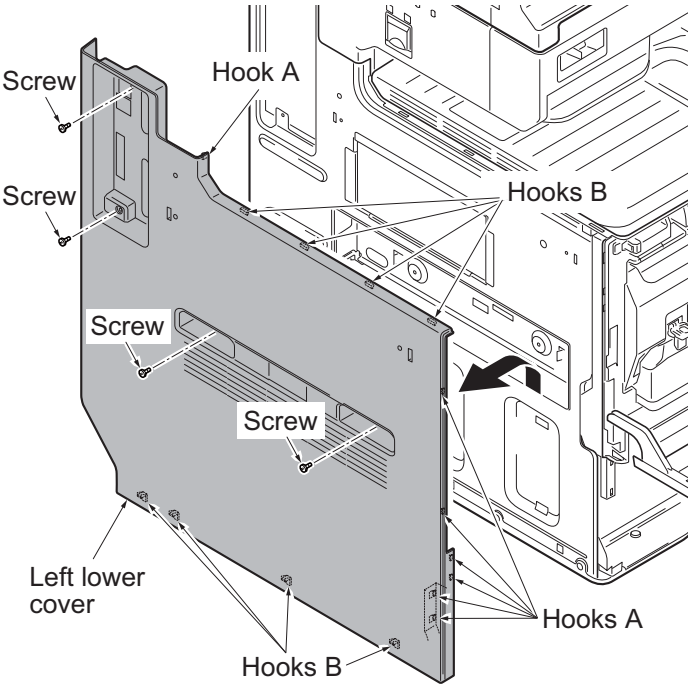

Figure 1-5-64

11. Remove eight screws and then remove the main PWB with mount board.

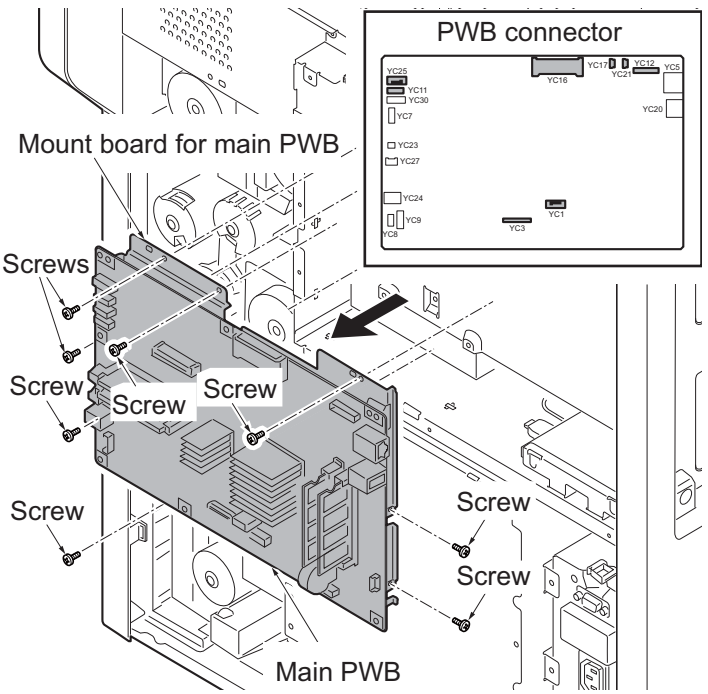

Figure 1-5-65

12. Remove all connectors from the video PWB.
13. Release three wire holders and three edgings and remove the wires and the FFC.
14. Remove nine screws and then remove the controller box.

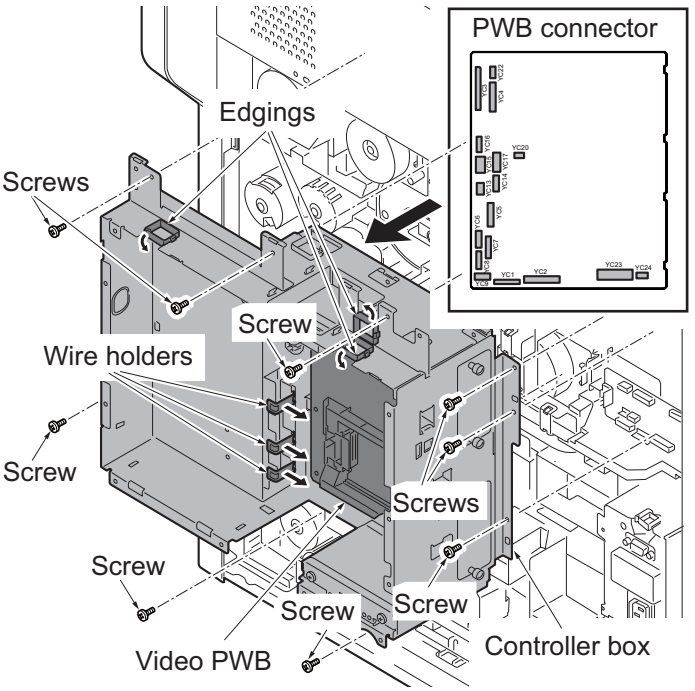

Figure 1-5-66

15. Remove all conectors from the engine PWB.
16. Remove four screws and then remove the engin PWB.
17. Check or replace the engine PWB and refit all the removed parts.

    CAUTION: When replacing the engine PWB, remove the EEPROM (U15) from the engine PWB that has been removed and then reattach it to the new engine PWB.

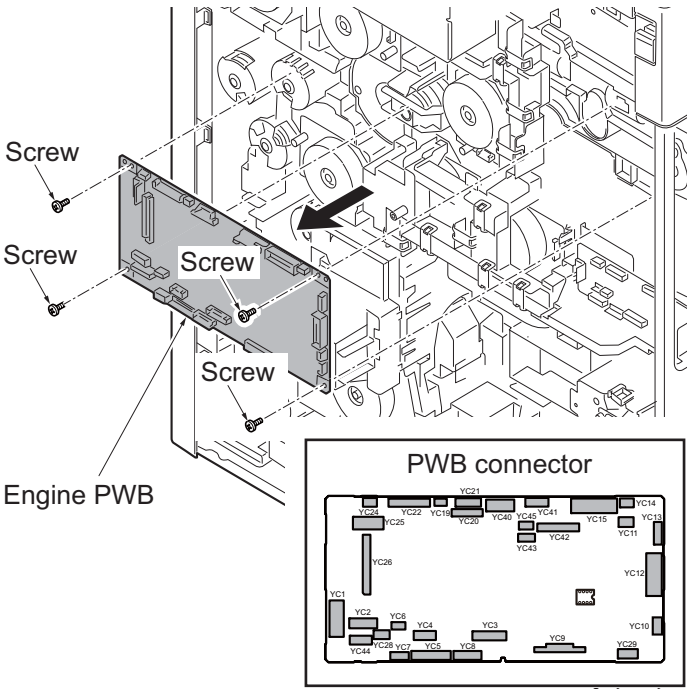

Figure 1-5-67

(3) Detaching and refitting the power source PWB

Procedure

1. Remove the rear cover.
   (See page 1-5-5)
2. Remove seven screws and then remove the controller box cover.

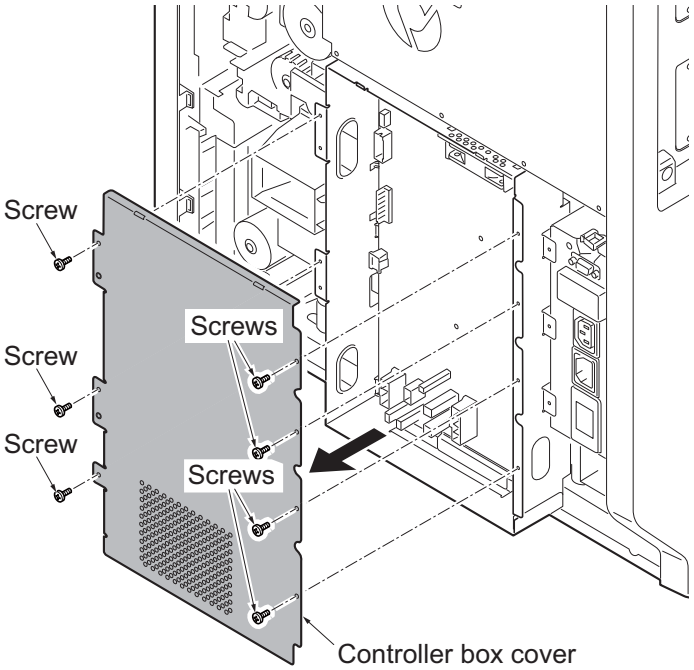

Figure 1-5-68

3. Remove all connecters from the power source PWB.
4. Remove eight screws and then remove the power source PWB.
5. Check or replace the power source PWB and refit all the removed parts.

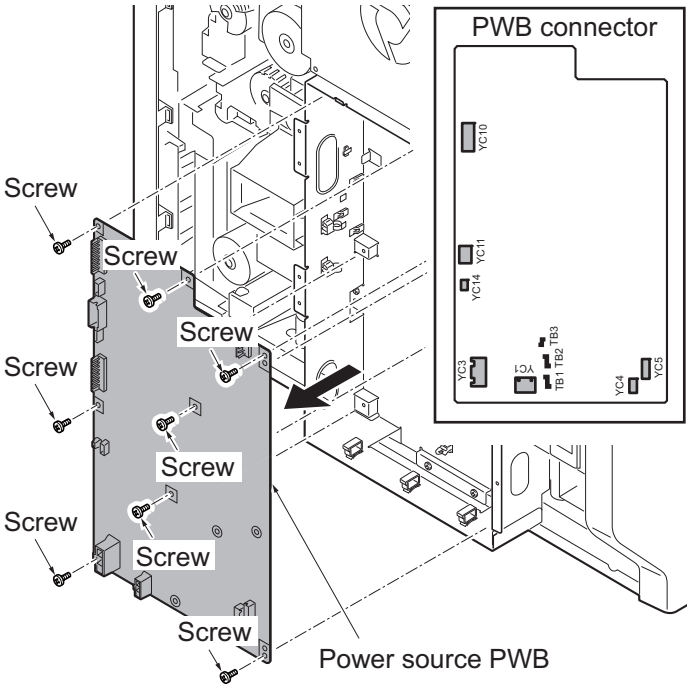

Figure 1-5-69

(4) Detaching and refitting the video PWB

Procedure

1. Remove the rear cover.
   (See page 1-5-5)
2. Remove the controller box.
3. Remove the slot 1 cover and the slot 2 cover by removing each two screws.
4. Remove two screws and then remove the mount board for CF slot.
5. Remove two screws and then remove the hard disk.

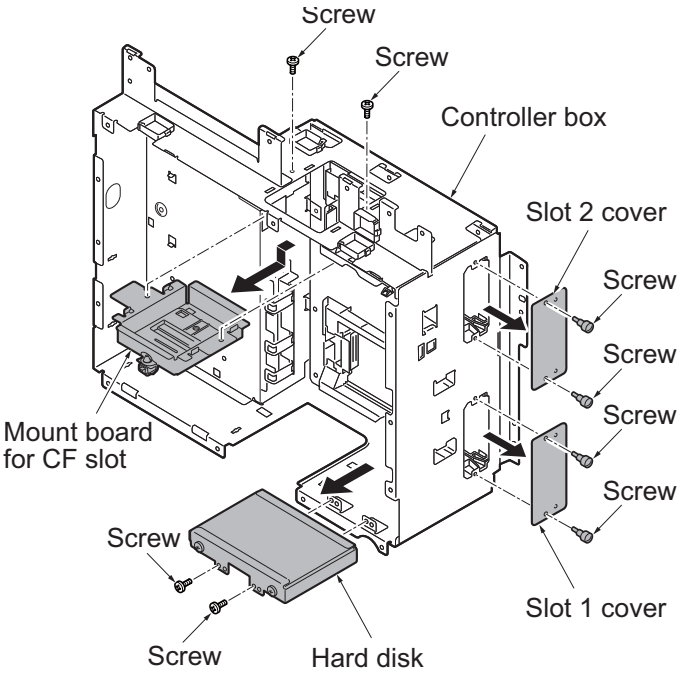

Figure 1-5-70

6. Unhook two hooks and then remove the wire guide 1.
7. Unhook the hook and then remove the wire guide 2.

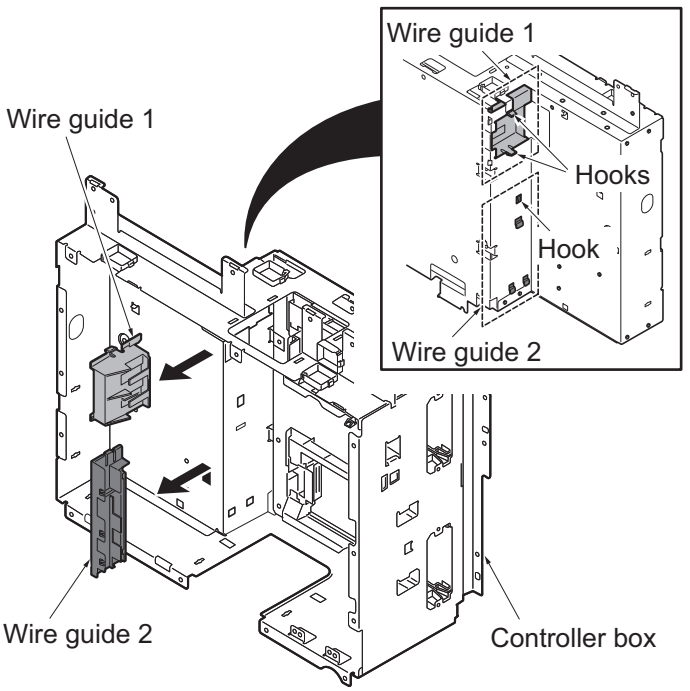

Figure 1-5-71

8. Remove eight screws and then remove the video PWB.
9. Check or replace the video PWB and refit all the removed parts.

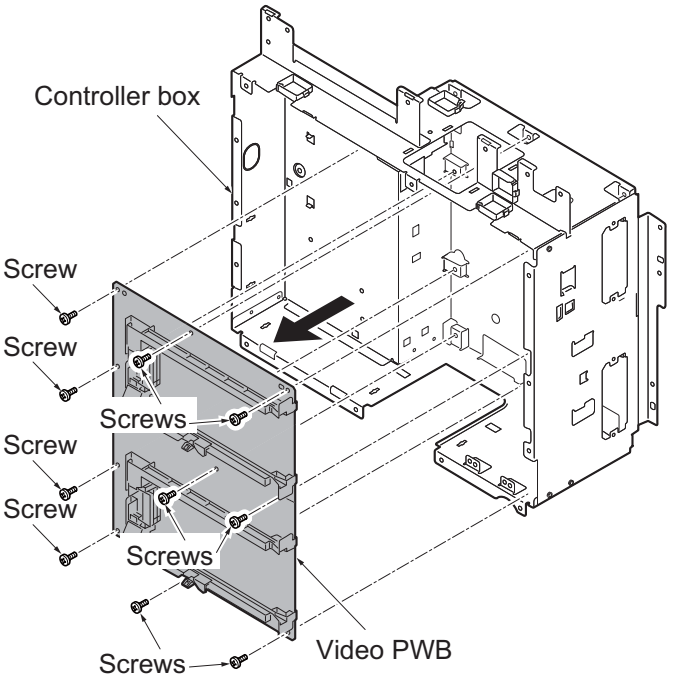

Figure 1-5-72

(5) Detaching and refitting the operation panel PWB main

Procedure

1. Open the front cover.
2. Remove the front upper cover.
3. Remove two screws and then remove the operation panel lower cover.

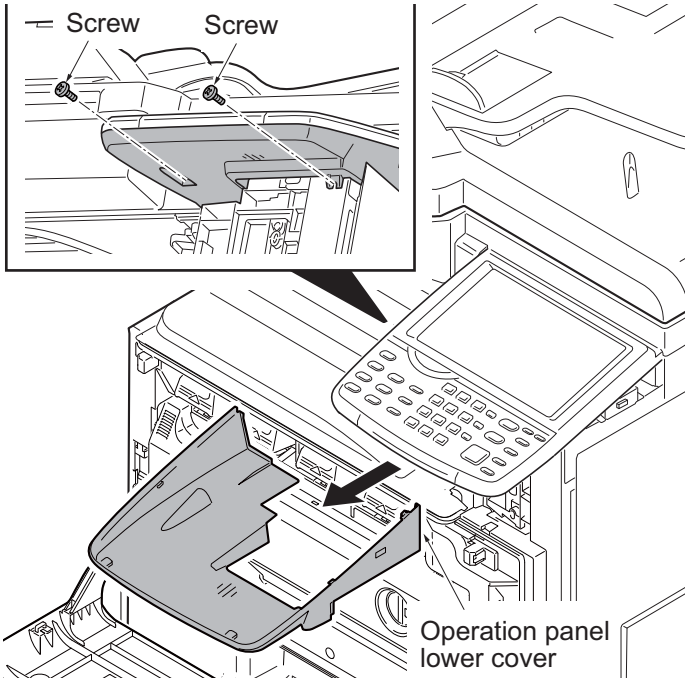

Figure 1-5-73

4. Remove three screws and then rotate the operation panel upper unit.

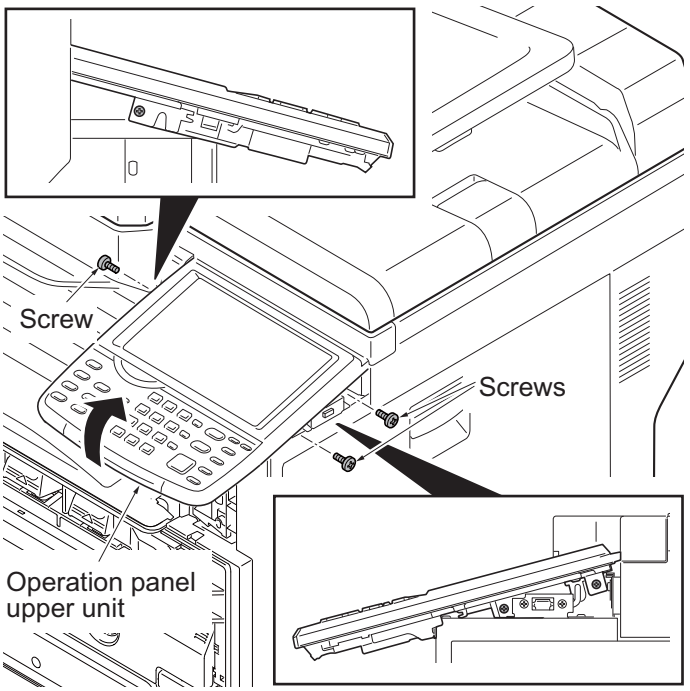

Figure 1-5-74

5. Remove three connectors from the operation panel PWB main.
6. Remove the operation panel upper unit.

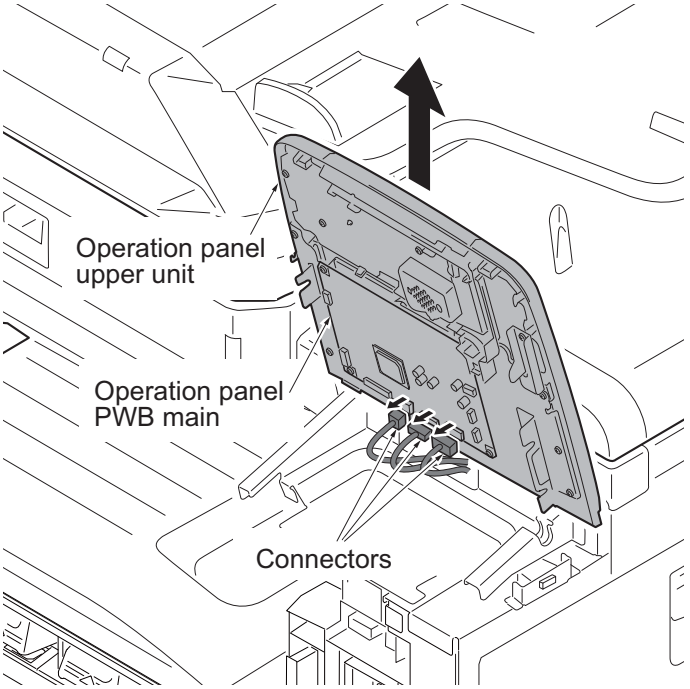

Figure 1-5-75

7. Remove all connectors and FFC from the operatioon panel PWB main.
8. Remove four screws and then remove the operation panel PWB main.
9. Check or replace the operation panel PWB main and refit all the removed parts.

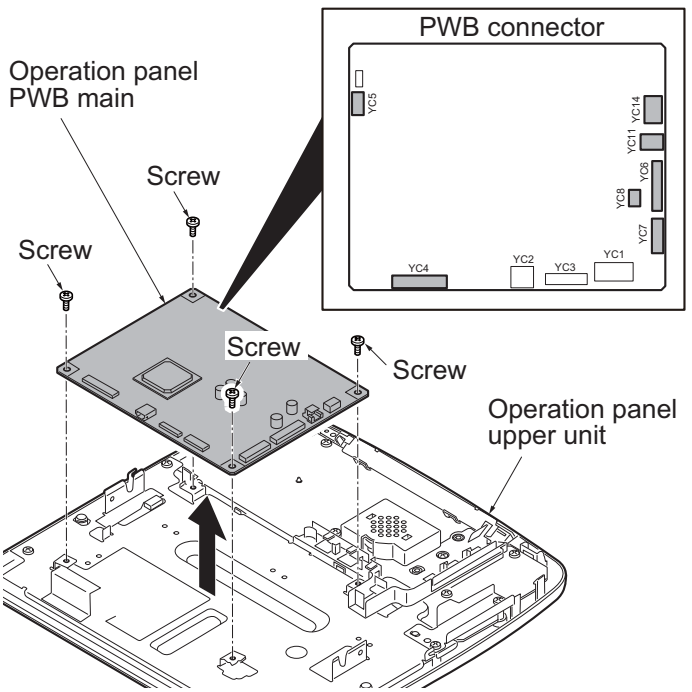

Figure 1-5-76

(6) Detaching and refitting the IH PWB

Procedure

1. Remove the controller box.
   (See page 1-5-35)
2. Remove the scanner right cover.
   (See page 1-5-22)
3. Remove the right upper cover.
4. Remove the right rear cover.

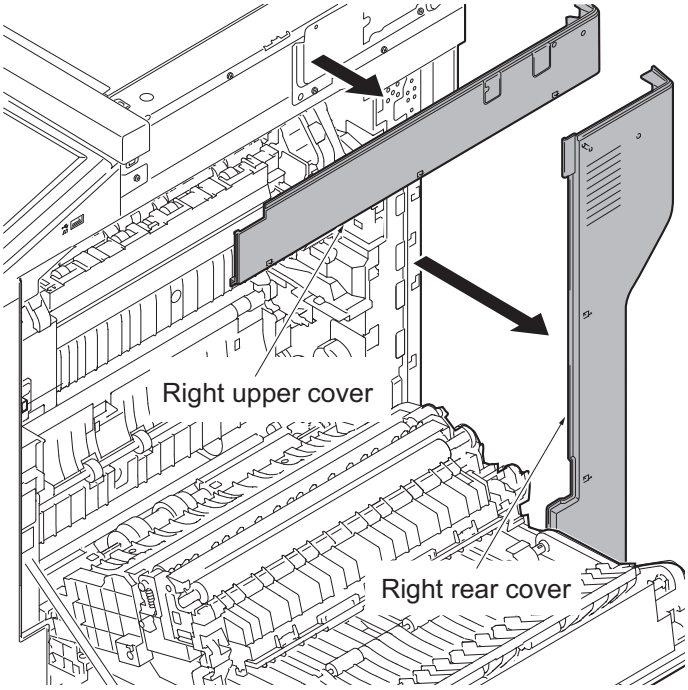

Figure 1-5-77

5. Remove two screws and then remove the IH box cover.
6. Remove all connectors from the IH PWB.
7. Remove six screws and then remove the IH PWB.
8. Check or replace the IH PWB and refit all the removed parts.

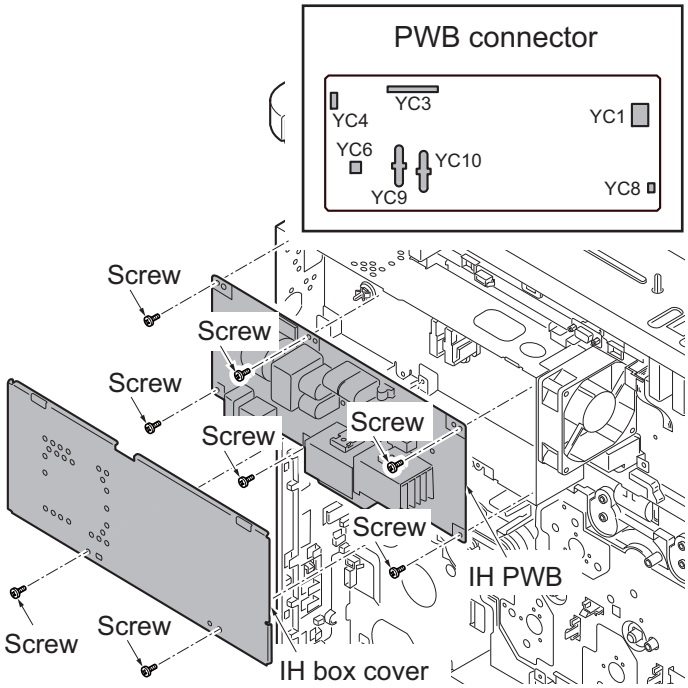

Figure 1-5-78

1-5-12 Others

(1) Detaching and refitting the language sheet

Procedure

1. Insert a flat-head screwdriver and slide the operation panel covers A and B to remove them.

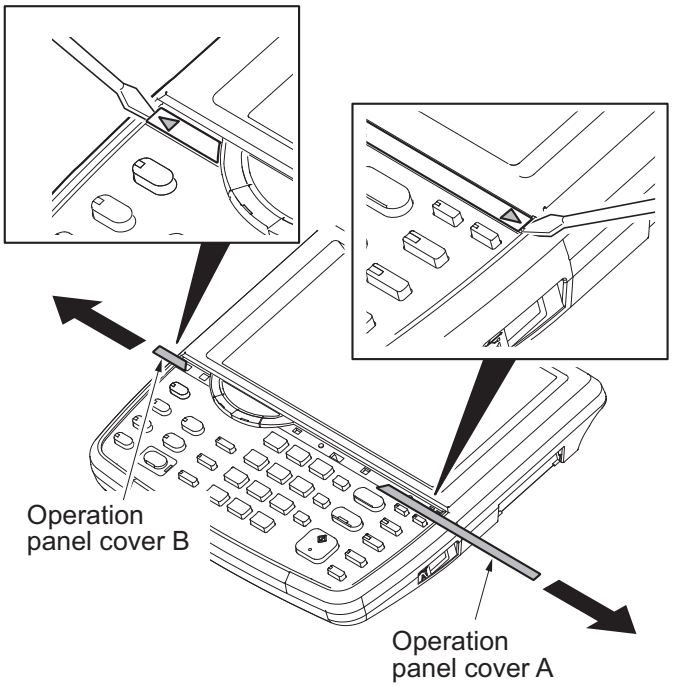

Figure 1-5-79

2. Remove the clear panel.

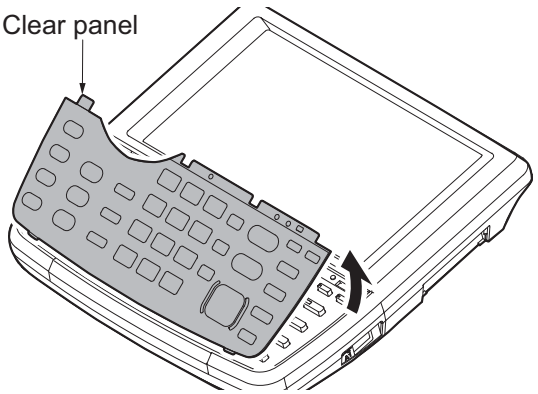

Figure 1-5-80

3. Remove the operation panel sheet.
4. Replace the operation panel sheet of the corresponding language.
5. Refit the clear panel.
6. Refit the operation panel covers A and B.

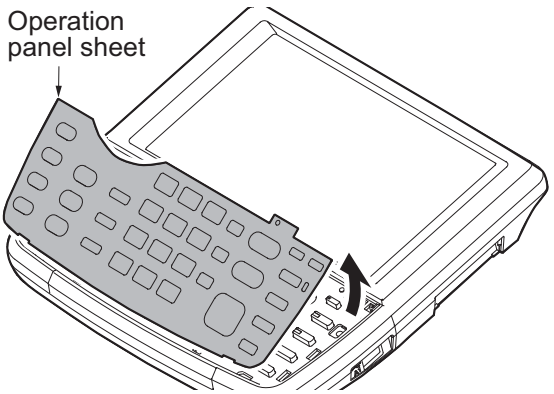

Figure 1-5-81

(2) Detaching and refitting the conveying unit

Procedure

1. Remove the MP tray.(See page 1-5-13)
2. Open the right cover 1.

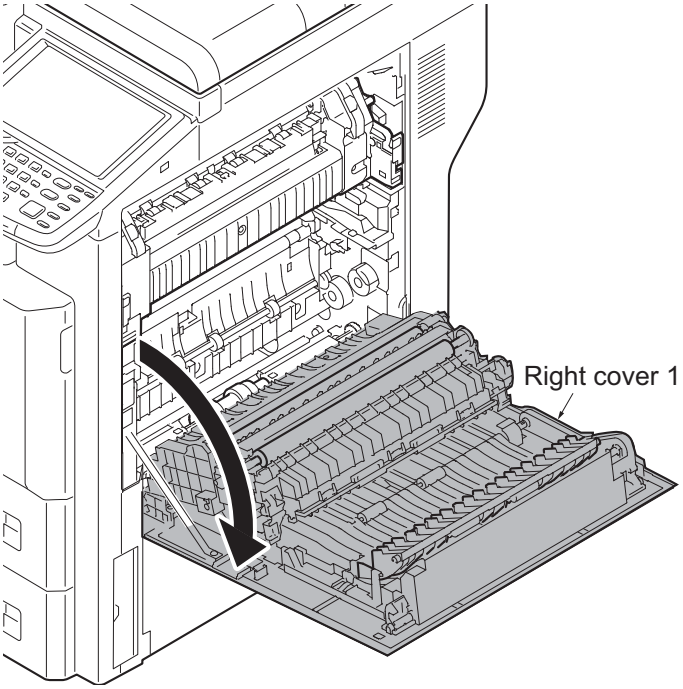

Figure 1-5-82

3. Remove two screws and then remove two straps.

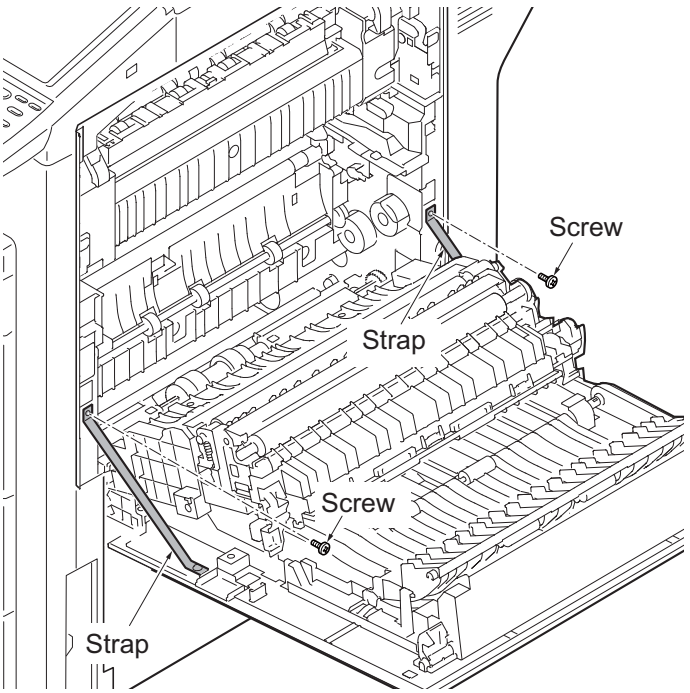

Figure 1-5-83

4. Rotate the wire cover.
5. Remove two connectors.
6. Rotate the fulcrum axis and slide it forward.
7. Pull the right cover 1 backward and then remove it.

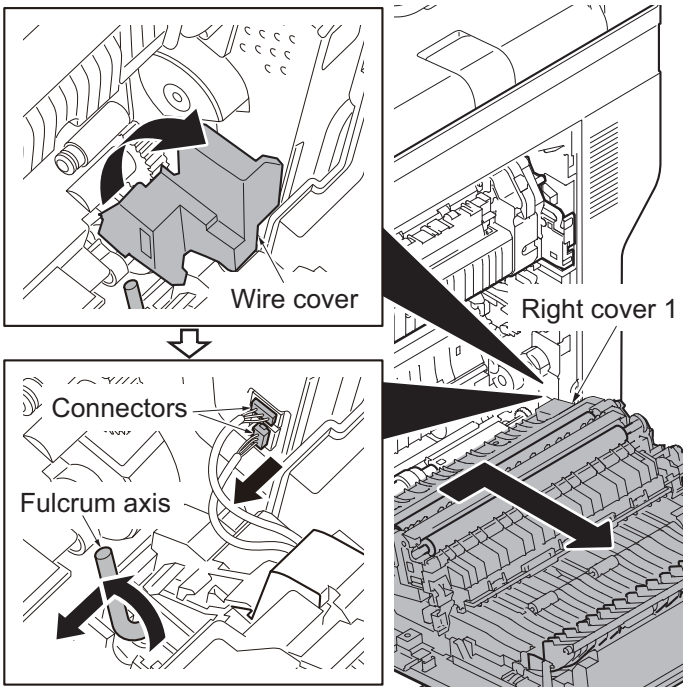

Figure 1-5-84

(3) Direction of installing the principal fan motors

When detaching or refitting the fan moter,be careful of the airflow direction (intake or exhaust).

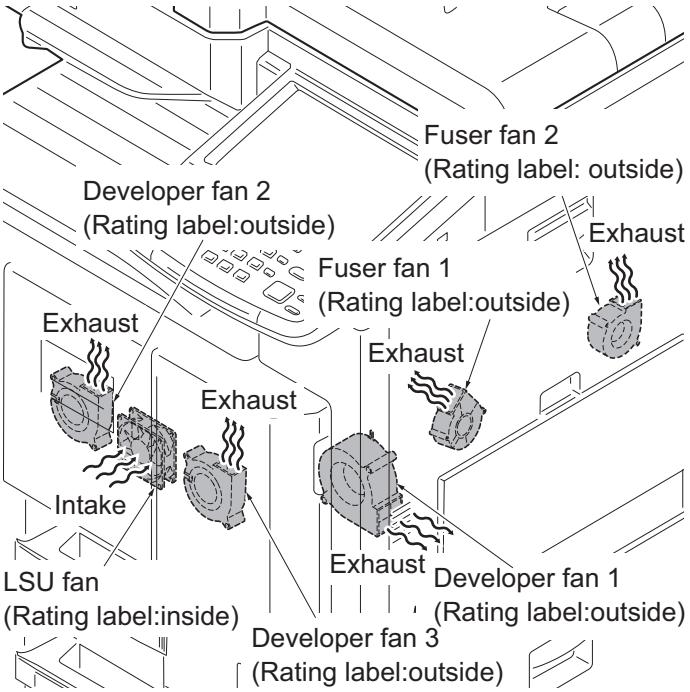

Figure 1-5-85

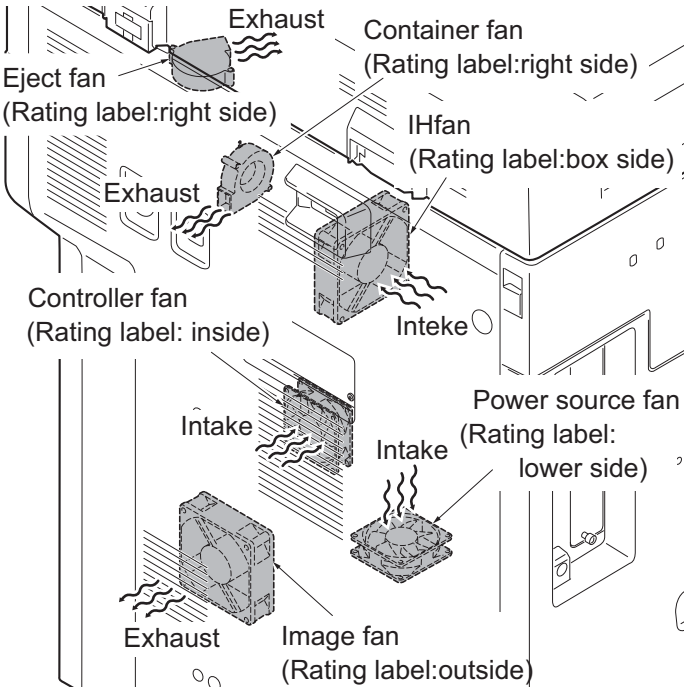

Figure 1-5-86

This page is intentionally left blank.

1-6-1 Upgrading the firmware

Follow the procedure to upgrade the firmware below.

* Main PWB (CTRL)
* DP main PWB (DP)
* PF main PWB (PF)
* DF main PWB (DF)
* Bridge PWB (AK)
* Engine fuser PWB (IH)
* Engine LSU PWB (LSU)
* Engine IO PWB (IO)
* Engine PWB (ENGN)
* FAX PWB (FAX)
* First color table (CLT1)
* Second color table (CLT2)
* Language data (OPT)
* Dictionary data (DIC)
* Operation panel PWB (PANL)

Preparation

Extract the file that has the download firmware and store them in a USB Memory.

NOTE: To improve Firmware Upgrade speed, a separate SKIP file can be added to the USB Memory Stick with the Firmware Upgrade package. The Skip file will allow ONLY the Firmware that has been Upgraded to a New Version to load, skipping duplicate Firmware Levels.

Procedure

1. Turn ON the main power switch and confirm if the screen shows “Ready to print” then, turn OFF the main power switch.
2. Insert USB memory that has the firmware in the USB memory slot.
3. Turn ON the main power switch.
4. About 50 seconds later, “Farmware Update” will be displayed (this shows that downloading is ready to start).
5. Select the firmware to upgrade by referring to the following codes:

   CTRL → DP → PF → DF → AK → IH → LSU → IO → ENGN → FAX → CLT1 → CLT2 → OPT → DIC → PANL

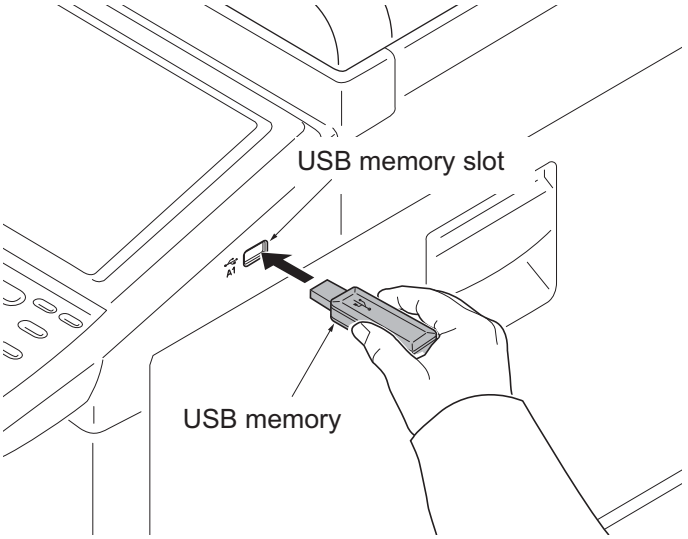

Figure 1-6-1

Caution:

Never turn off the power switch or remove the USB flash device during upgrading.

Example:

```
=================
  Firmware Update        First line:    Status of upgrading.
      CTRL               Second line:   Firm ware for upgrading.
      xxx%               Third line:    The progress of upgrading in %.
=================
```

6. Confirm that upgrading is completed.
7. Confirm that the version of the firmware is correctly displayed.
8. Turn OFF the main power switch and remove the USB memory.

Emergency-UPDATE

If the device is accidentally switched off and upgrading was incomplete, upgrade becomes impossible from a USB flash device.
In that case, retry upgrading after recovering the software by following the procedure below.

Preparation

The CF memory card must be formatted in FAT or FAT32 in advance.
Extract the main firmware to download from the file.
Rename the file which was extracted from the archive. [DL_CTRL.2MV] to [KM_EMRG.2MV]
Copy the all extracted files to the root of the CF memory.

Procedure

1. Turn the main power switch off.
2. Install the CF memory card which contains the firmware onto the main PWB.
3. Turn the main power switch on.
4. Rewriting of the PWB software will start for restoration.
   The memory and attention LEDs will be blinking.
5. Only the Memory LED will be blinking when rewriting is successful.
   * : Only the Attention LED will be blinking when rewriting is failed.
6. Turn the main power switch off.
7. Wait for several seconds and then remove the CF memory from the main PWB.
8. Extract the firmware to download from the archive and copy to the root of the USB flash device.
   NOTE: Deletes the "ES_SKIP.on" file When it is contained directly under the USB memory.
9. Insert the USB flash device in which the firmware was copied into the slot on the machine.
10. Perform steps 3 to 8 on the previous page.

11. Turn the main power switch on.
12. Perform maintenance item U000 (Print a maintenance report) to check that the version of ROM U109 has been upgraded.

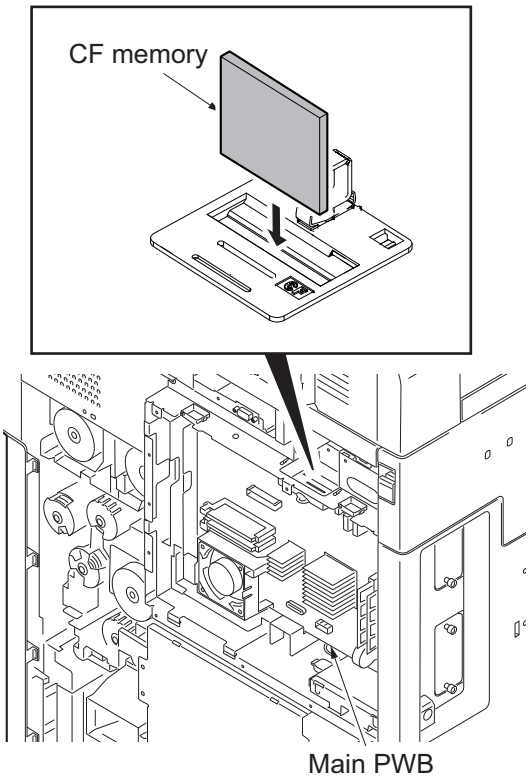

Figure 1-6-2

1-6-2 Remarks on PWB replacement

(1) Main PWB

NOTE: When replacing the main PWB, remove the EEPROM (YC14) and code DIMM (YS4) from the main PWB that has been removed and then reattach it to the new main PWB.

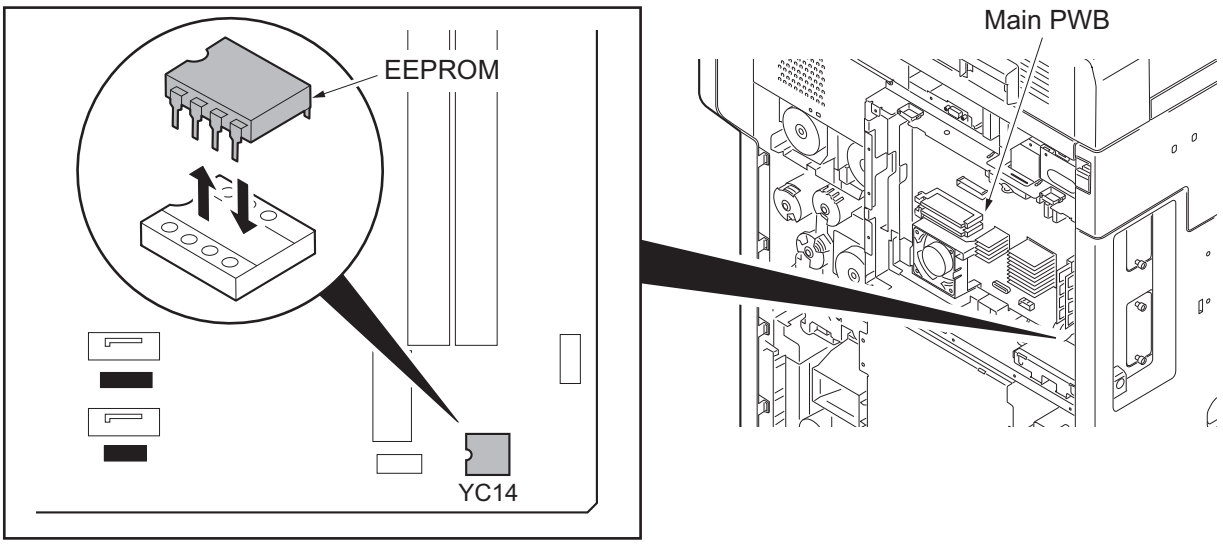

Figure 1-6-3

NOTE: When refitting DIMM, check "CODE" and "FLS" marked on the PWB and refit them to the original positions.

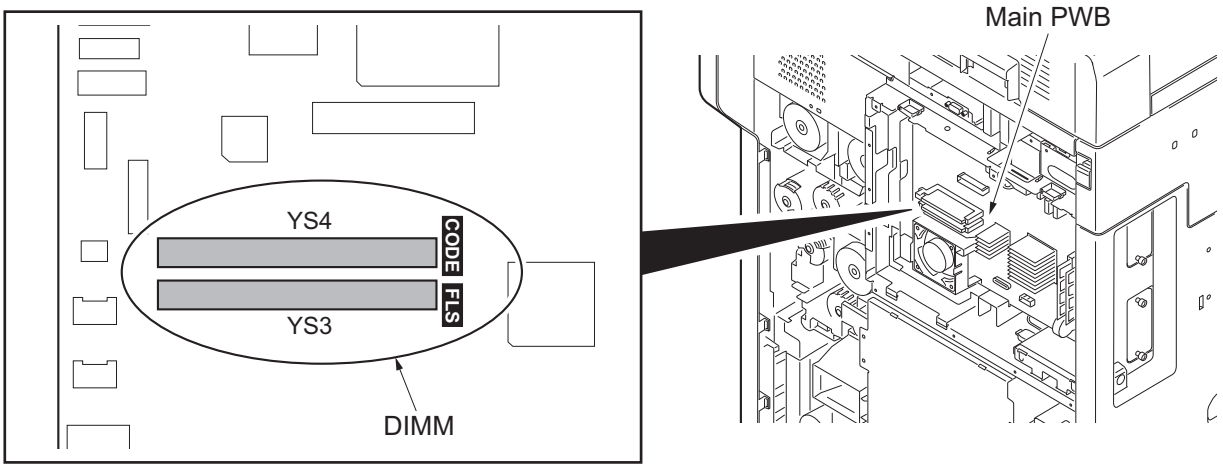

Figure 1-6-4

NOTE: If the code DIMM (YS4) was replaced with a service supplied part, perform the following.

1. Insert the USB flash device in which the latest firmware was copied, into the slot on the machine and turn power on.(see page P.1-6-1)
2. Referring to the U000 maintenance report printed previously, enter the following values.
   U252 Setting the destination
   U265 Setting OEM purchaser code
   U278 Setting the delivery date
   U402 Adjusting margins of image printing
   U952 Maintenance mode workflow

3. Reset machine settings.(Resets system menu settings modified at setup to their defaults.)
   Main items for settings
   [Date/Timer] - Date/Time settings
   [Date/Timer] - Timer settings (Sleep timer)
   [Edit Destination] - One-touch presetting
   [User/Job accounting] - Defaults for user authentication and job accounting only.
   Resettings are not required as the data are stored in hard disk.
   [FAX] - FAX transmittion settings (tel. no. of itself)
   [System] - Network settings (IP address)
   [Adjustment/Maintenance] - Silent Mode setting
4. Run the maintenance mode for image adjustments which follows.
   1. Performs maintenance mode U464 (Calibration) (see page P.1-3-124).
   2. Performs maintenance mode U469 (Auto color registration correction) (see page P.1-3-128).
   3. Performs maintenance mode U410 (Adjusting the halftone automatically) (see page P.1-3-109).

NOTE: When connecting the hard disk cables (YC1, YC2) to the PWB, match "BLACK" and "BLUE" marked on the PWB with the connector colors.

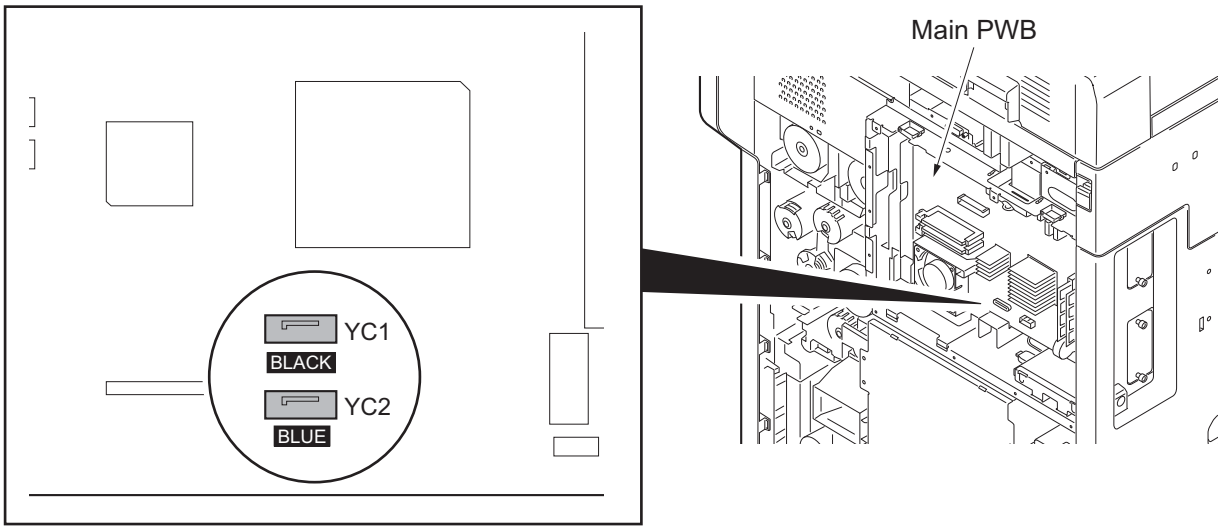

Figure 1-6-5

NOTE: When connecting the USB cables (YC17, YC21) to the PWB, match "BK" and "WH" marked on the PWB with the connector colors.

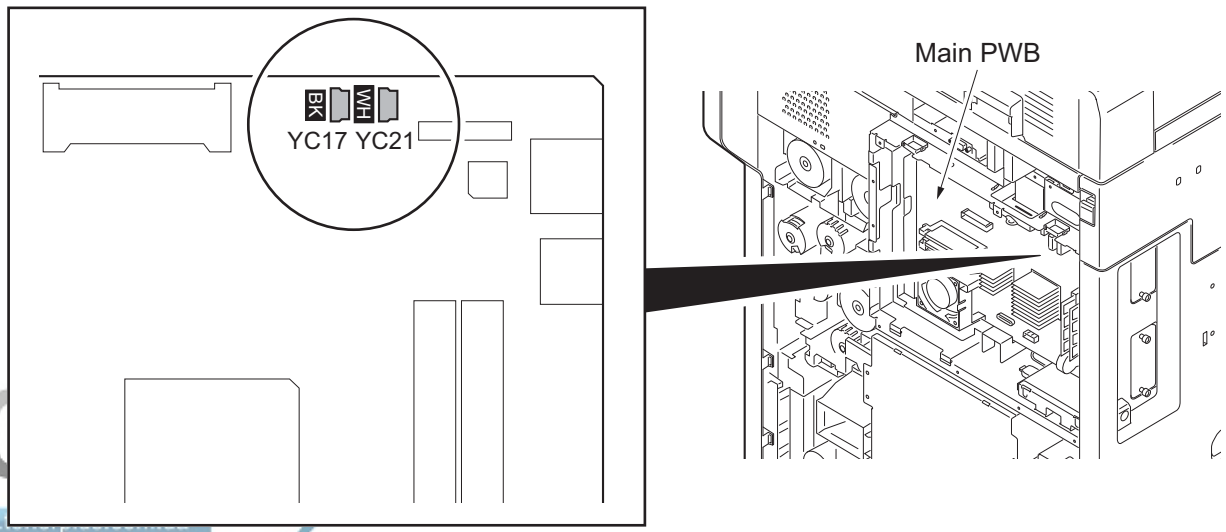

Figure 1-6-6

(2) Engine PWB

NOTE: When replacing the PWB, remove the EEPROM (U15) from the PWB and then reattach it to the new PWB.

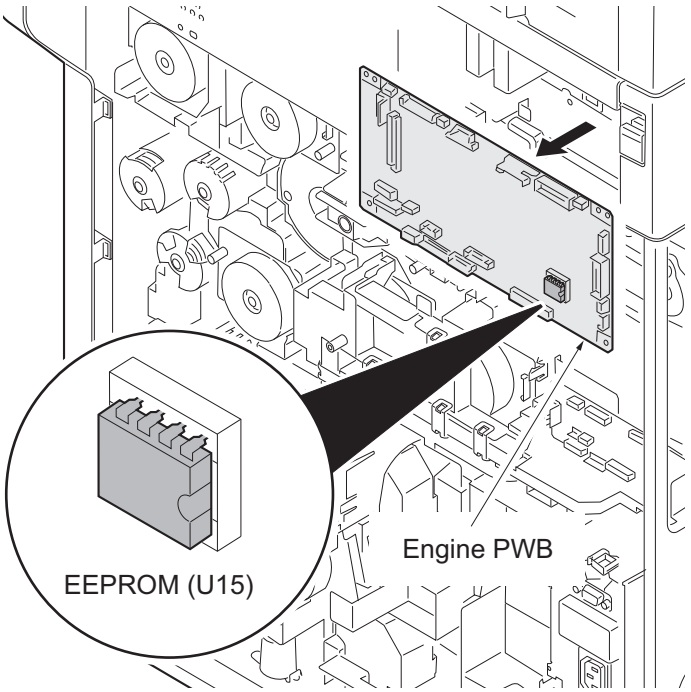

Figure 1-6-7

(3) DP main PWB

NOTE: When replacing the PWB, remove the EEPROM (YS1) from the PWB and then reattach it to the new PWB.

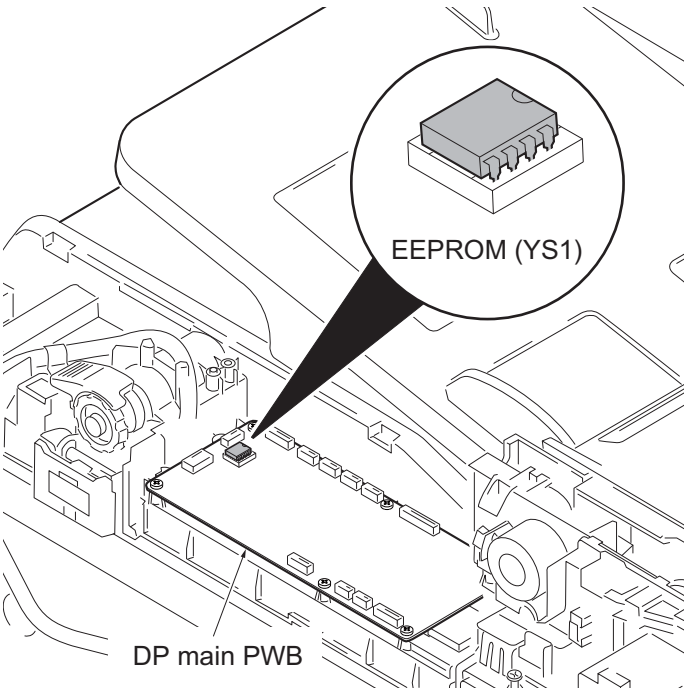

Figure 1-6-8

This page is intentionally left blank.

2-1-1 Paper feed/conveying section

The paper feed/conveying section consists of the paper feed unit that feeds paper from the cassette and the MP tray paper feed unit that feeds paper from the MP tray, and the paper conveying section that conveys the fed paper to the transfer/separation section.

(1) Cassette paper feed section

The cassette can contain 500 sheets. The sheet from the cassette is pulled out by rotation of the pickup roller and sent to the paper conveying section by rotation of the paper feed roller. Also the retard roller prevents multiple feeding of paper.

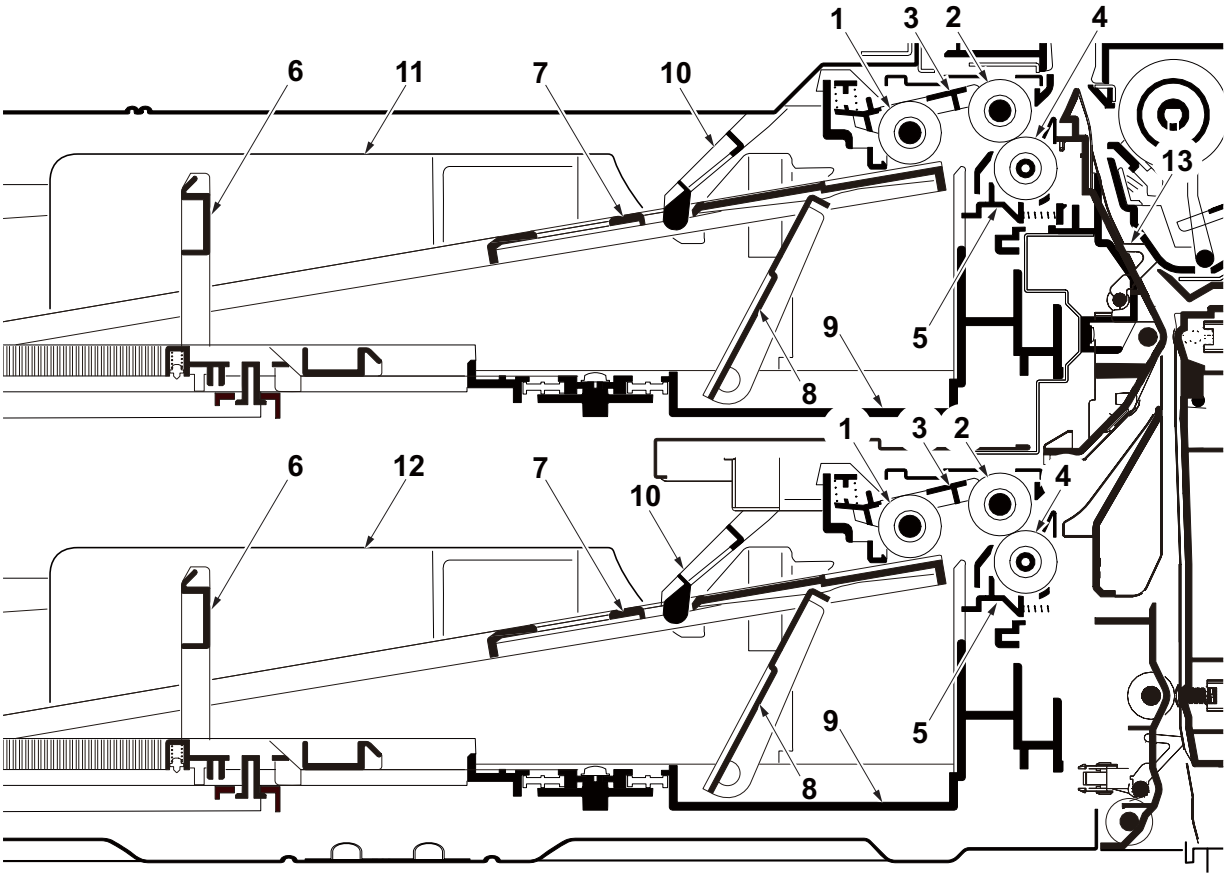

Figure 2-1-1 Cassette paper feed section

1. Pickup roller
2. Paper feed roller
3. Feed holder
4. Retard roller
5. Retard holder
6. Paper length guide
7. Bottom plate
8. Lift work plate
9. Cassette base
10. Actuator (paper sensor)
11. Cassette 1
12. Cassette 2
13. Acutuator (feed sensor 1)

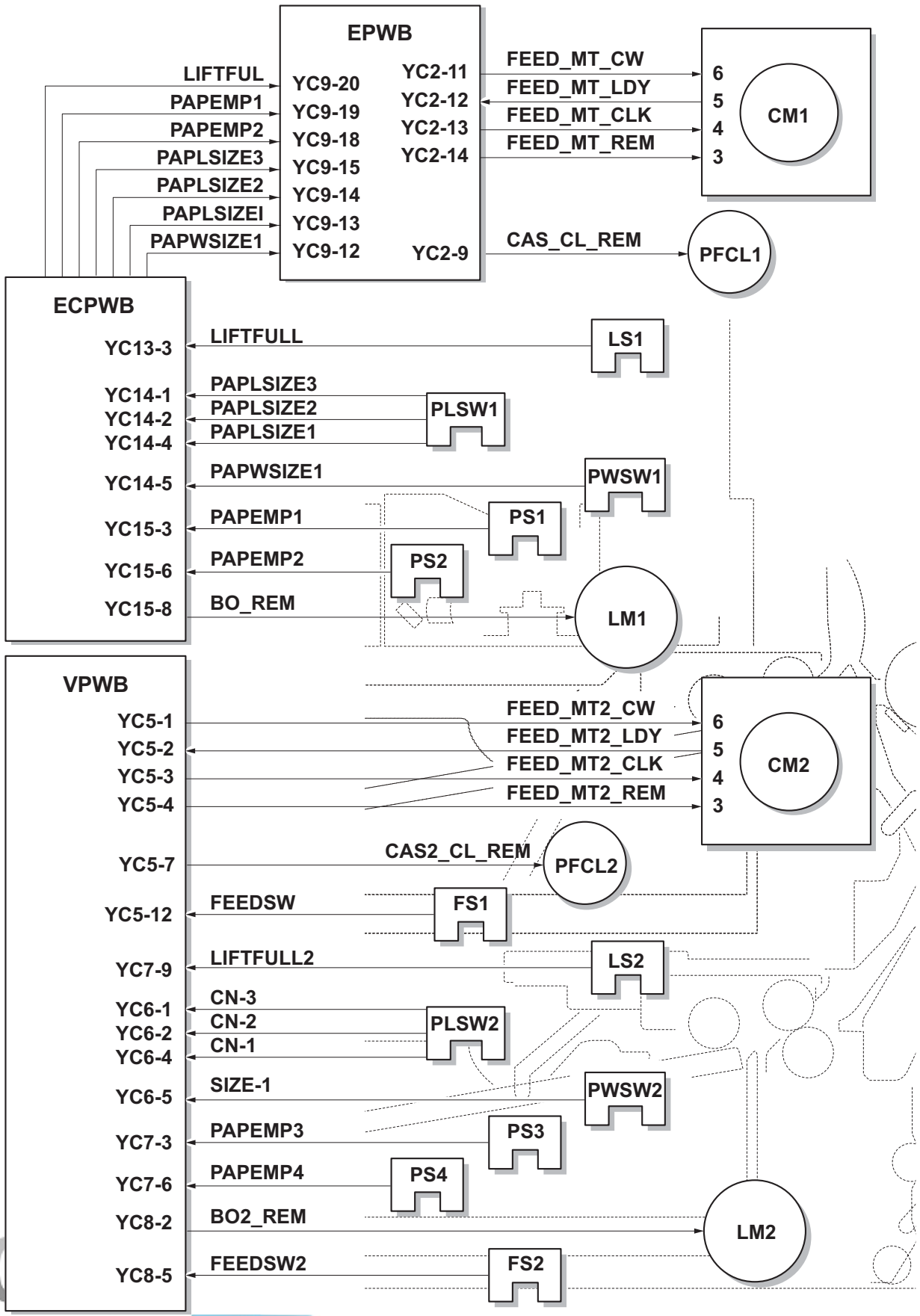

Figure 2-1-2 Cassette paper feed section block diagram

(2) MP tray paper feed section

The MP tray can contain 100 sheets. Feeding from the MP tray is performed by the rotation of the MP paper feed roller. Also, function of the MP separation pad prevents paper from multiple feeding.

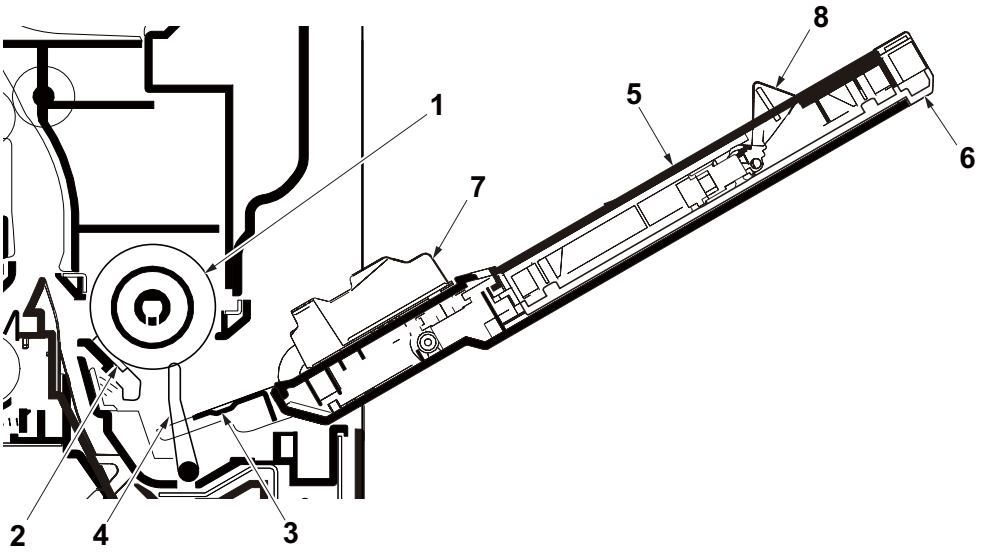

Figure 2-1-3 MP tray paper feed section

1. MP paper feed roller
2. MP separation pad
3. MP bottom plate
4. Actuator(MP paper feed sensor)
5. MP (multi purpose)tray
6. MP tray extension
7. MP paper width guide
8. Actuator (MP paper length switch)

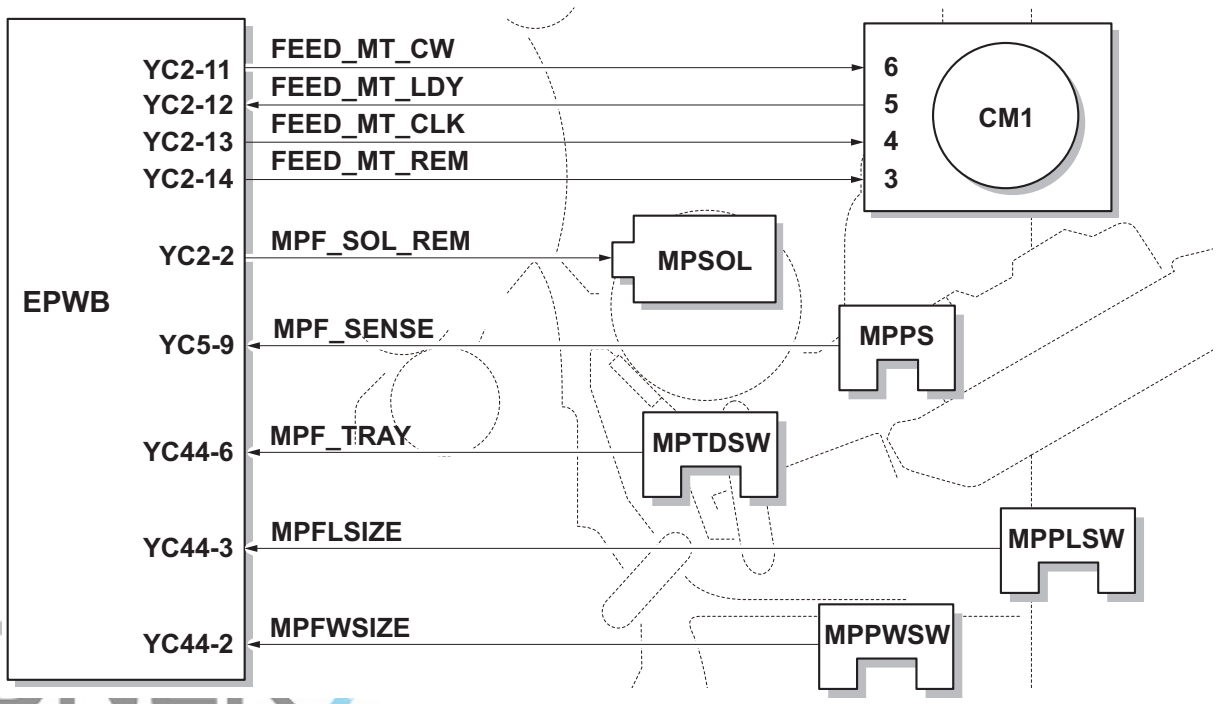

Figure 2-1-4 MP tray paper feed section block diagram

(3) Conveying section

The conveying section conveys paper to the transfer/separation section as paper feeding from the cassette or MP tray, or as paper refeeding for duplex printing. Paper by feeding is conveyed by the paper feed roller to the position where the registration sensor (RS) is turned on, and then sent to the transfer/separation section by the right registration roller and left registration roller.

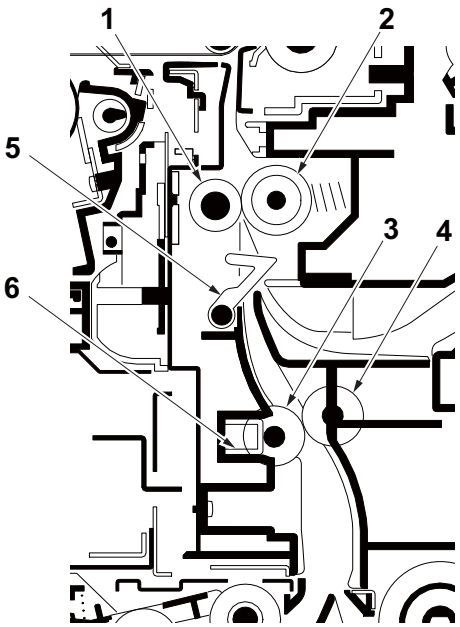

Figure 2-1-5 Conveying section

1. Left registration roller
2. Right registration roller
3. Left feed roller
4. Right feed roller
5. Actuator (registration sensor)
6. Registration cleaner

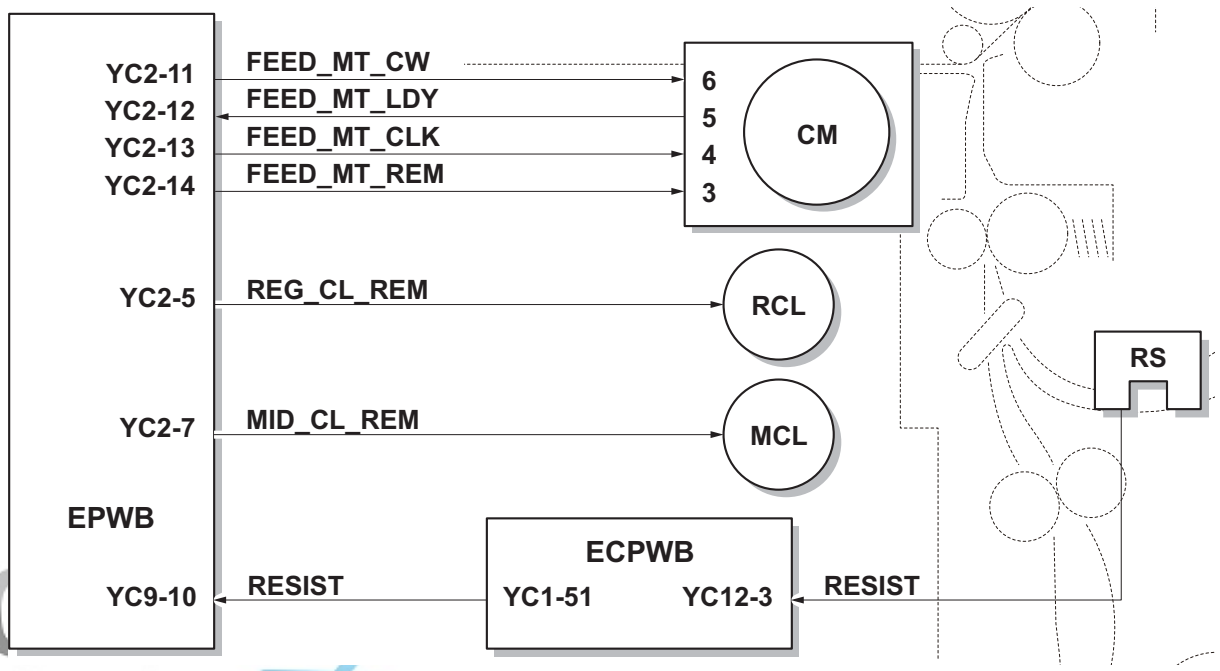

Figure 2-1-6 Paper conveying section block diagram

2-1-2 Drum section

The drum section consists of the drum, the charger roller unit, and the cleaning unit, and the drum surface is uniformly charged in preparation for formation of residual image by laser beam.
After transfer is complete, toner remaining on the drum surface is chipped off with the cleaning blade and is collected to the waste toner box with the sweep roller. The cleaning lamp (CL) consists of LEDs and removes residual charge on the drum before main charging.

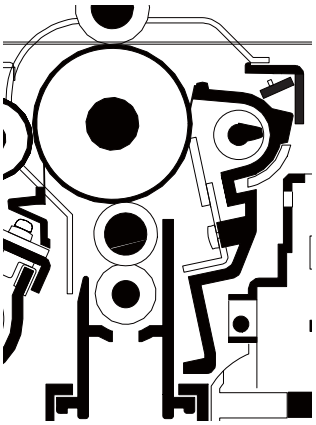

Figure 2-1-7 Drum section

1. Drum
2. Charger roller
3. Charger cleaning roller
4. Charger case
5. Cleaning blade
6. Sweep roller
7. Drum frame
8. Cleaning lamp (CL)

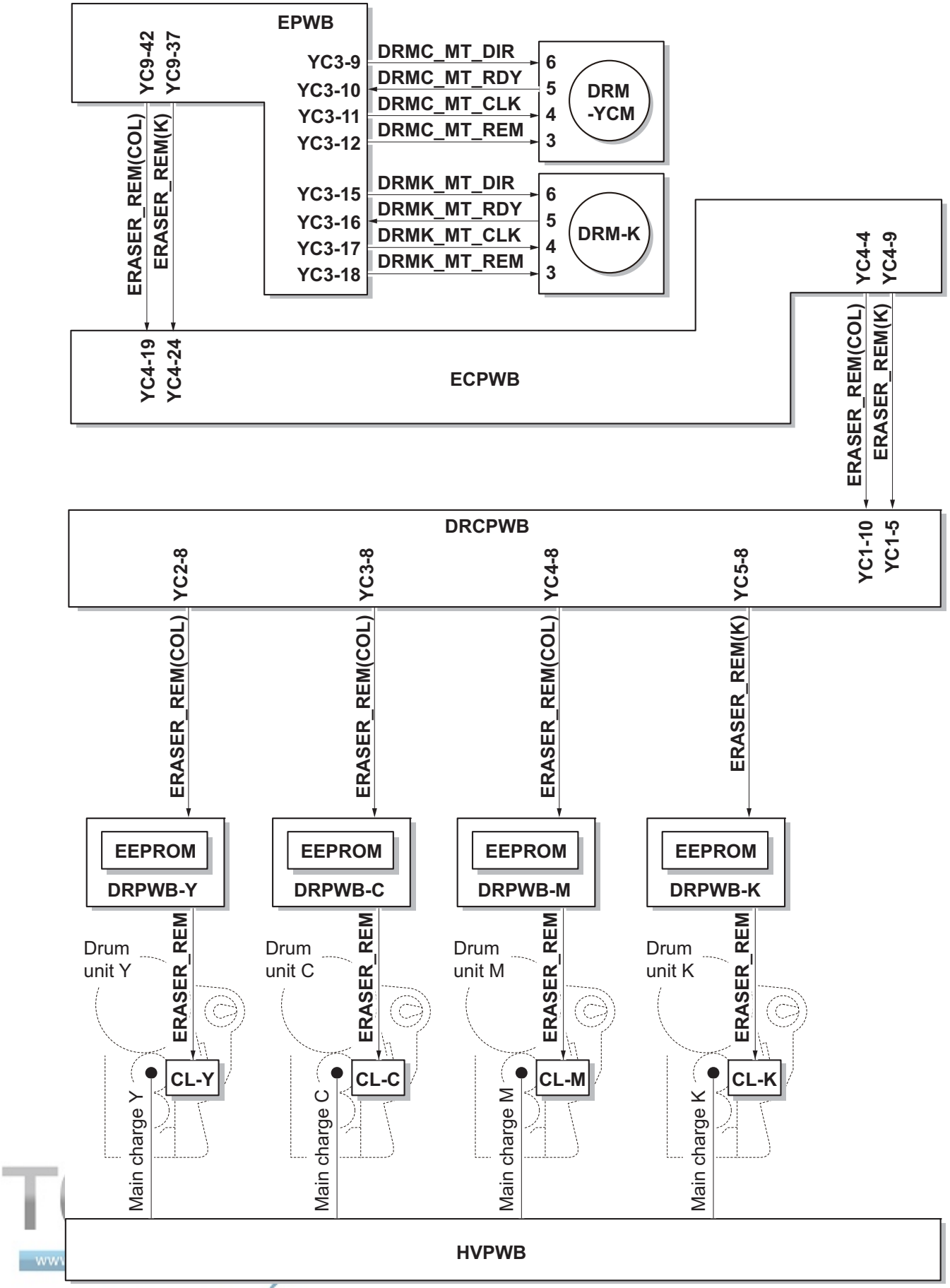

Figure 2-1-8 Drum section block diagram

2-1-3 Developing section

The developing unit consists of the sleeve roller that forms the magnetic brush, the magnet roller, the developing blade and the developing screws that agitate the toner.Also, the toner sensor (TS) checks whether or not toner remains in the developing unit.

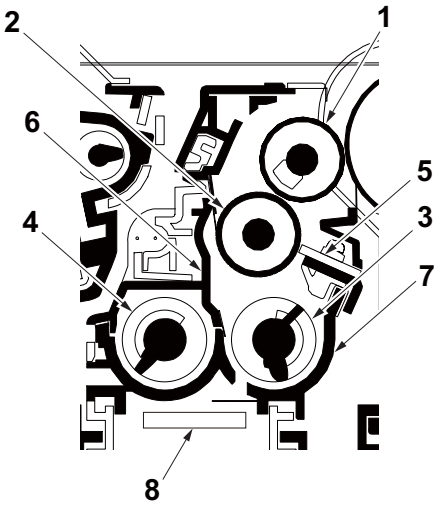

Figure 2-1-9 Developer section

1. Sleeve roller
2. Magnet roller
3. Developing screw A
4. Developing screw B
5. Developing blade
6. Developer case
7. Developer base
8. Toner sennsor (TS)

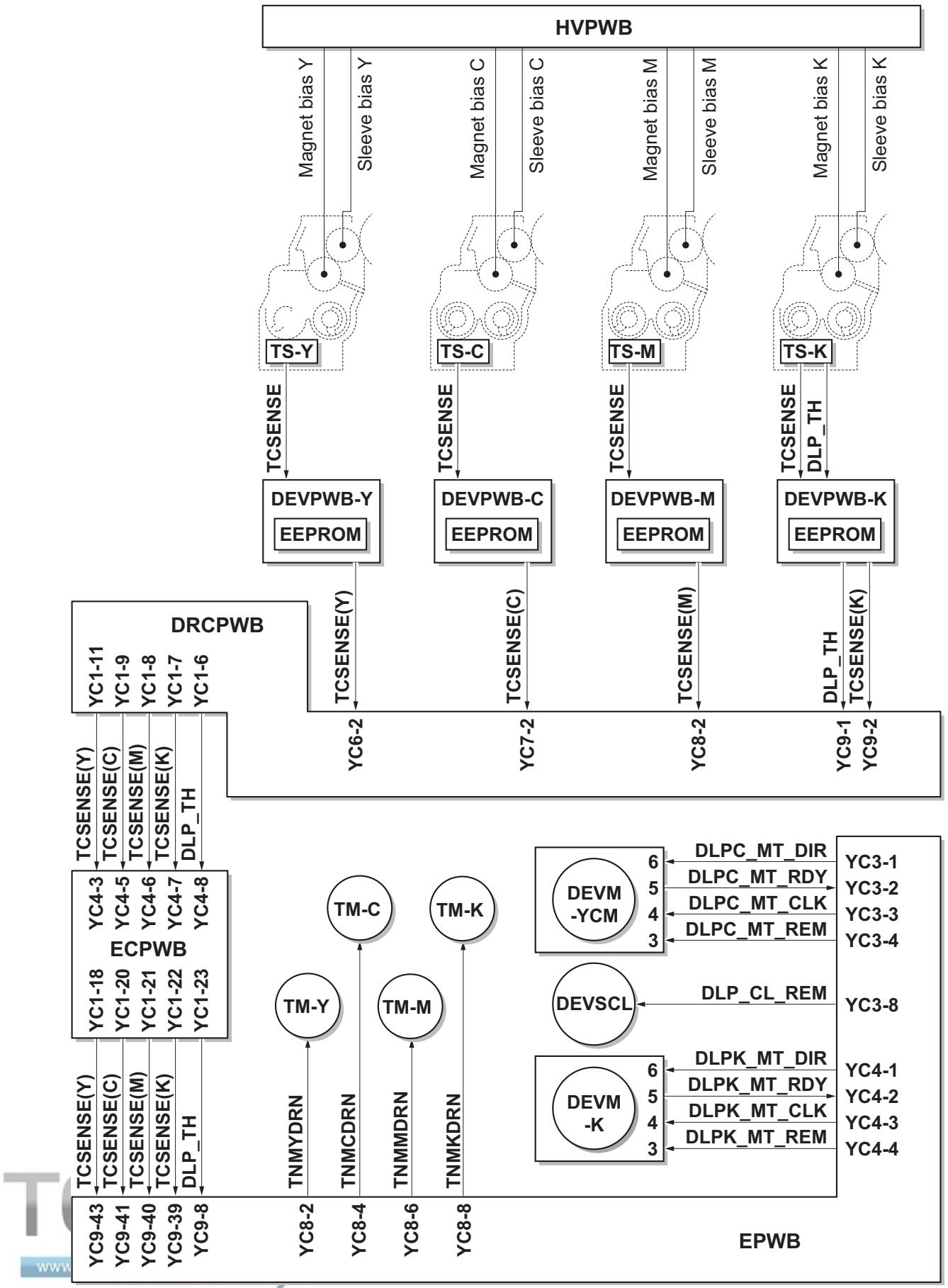

Figure 2-1-10 Developing section block diagram

2-1-4 Optical section

The optical section consists of the image scanner section for scanning and the laser scanner section for printing.

(1) Image scanner section

The original image is illuminated by the exposure lamp (EL) and scanned by the CCD image sensor in the CCD PWB (CCDPWB) via the three mirrors and ISU lens, the reflected light being converted to an electrical signal.
If a document processor is used, the image scanner unit stops at the position of the DP contact glass and scans sequentially one row of the image on the original in synchronization with the moving timing of the original in the sub scan direction by driving the DP.

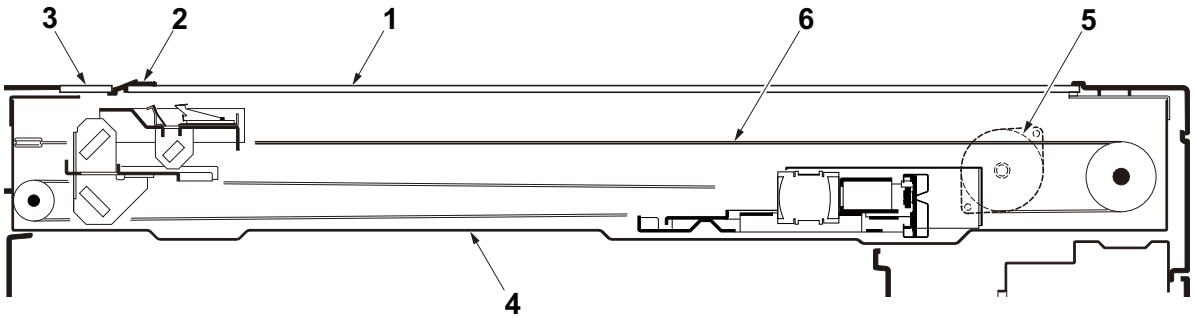

Figure 2-1-11 Scanner unit

1. Platen
2. Original size indicator plate
3. DP contact glass
4. ISU frame
5. ISU motor (ISUM)
6. ISU wire

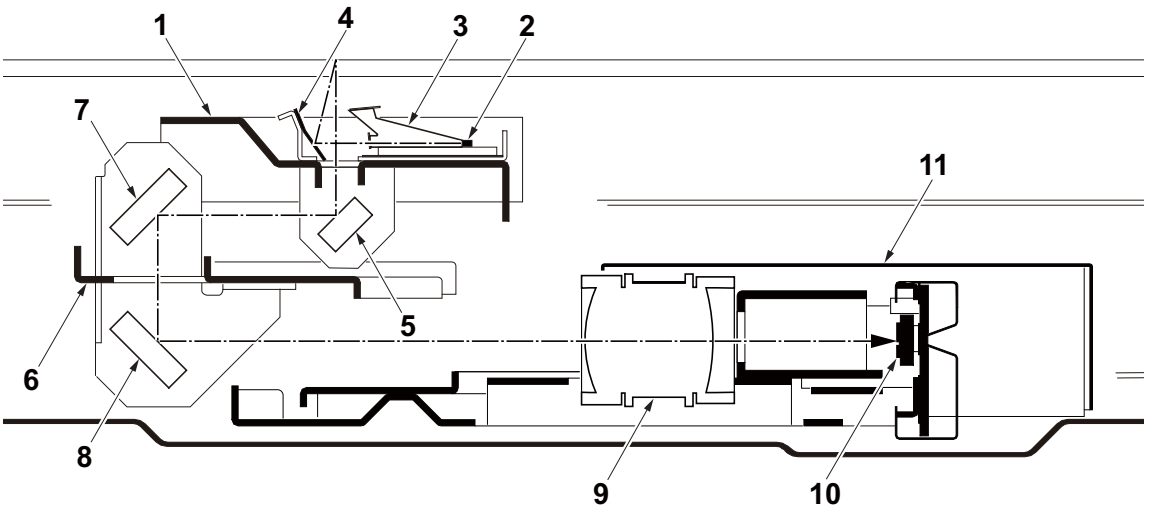

Figure 2-1-12 Image scanner unit (ISU)

1. The first mirror frame
2. Exposure lamp (EL)
3. Exposure lens
4. Reflector
5. Mirror A
6. The second mirror frame
7. Mirror B
8. Mirror C
9. ISU lens
10. CCD PWB (CCDPWB)
11. Scanner cover

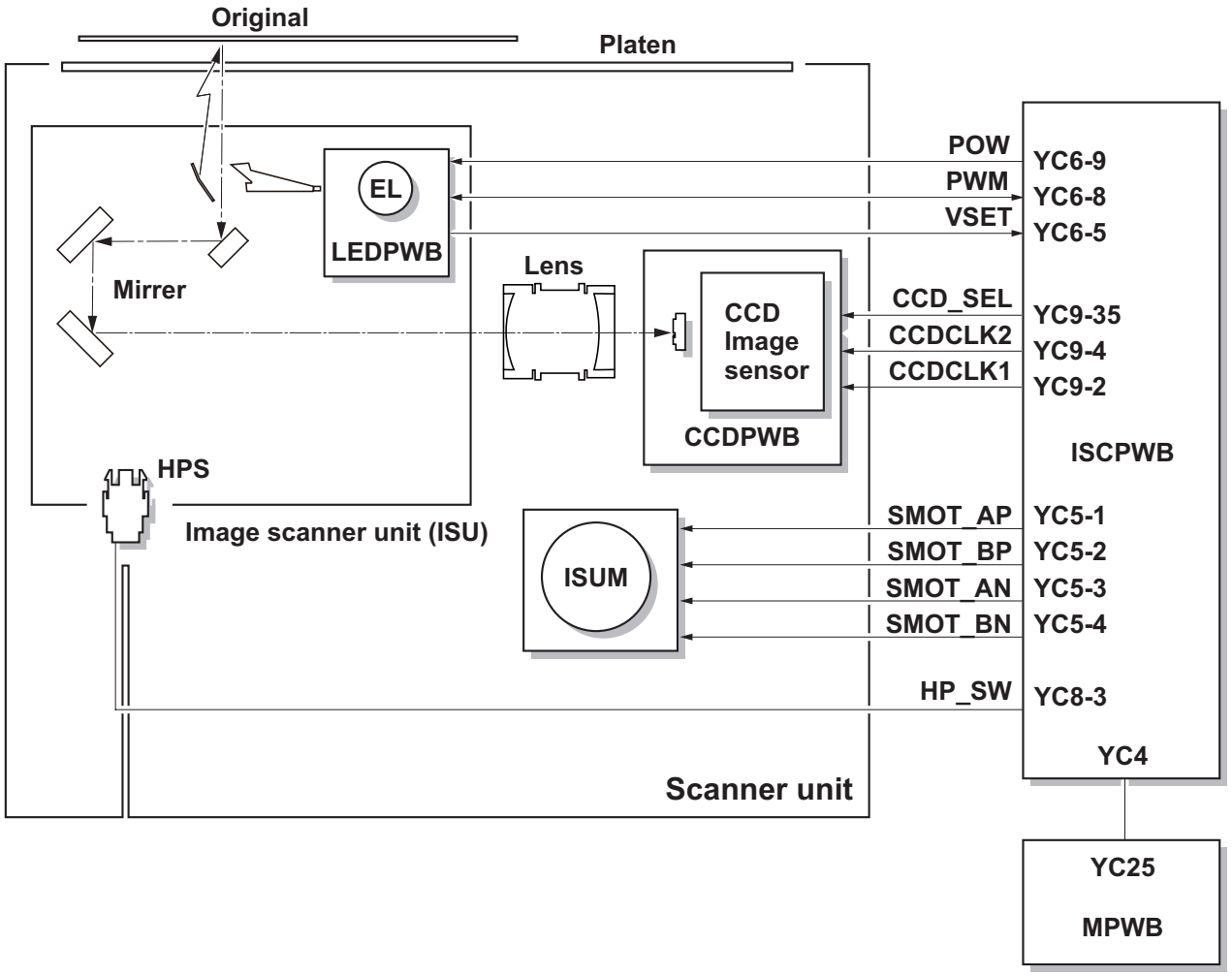

Figure 2-1-13 Scanner unit block diagram

(2) Laser scanner section

The charged surface of the drum is then scanned by the laser beam from the laser scanner unit. The laser beam is dispersed as the polygon motor (PM) revolves to reflect the laser beam over the drum. Various lenses and mirror are housed in the laser scanner unit, adjust the diameter of the laser beam, and focalize it at the drum surface. Also the LSU cleaning motor (LSUCM) is activated to conduct automatically cleaning of the LSU dust shield glass.

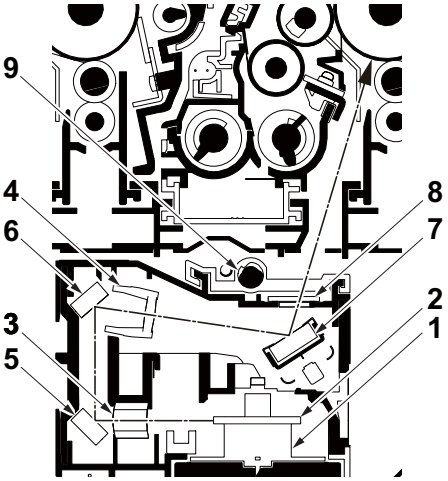

Figure 2-1-14 Laser scanner unit (LSU)

1. Polygon motor (PM)
2. Porygon mirrer
3. fθ lens A
4. fθ lens B
5. Mirrer A
6. Mirrer B
7. Mirrer C
8. LSU dust shield glass
9. LSU cleaning spiral

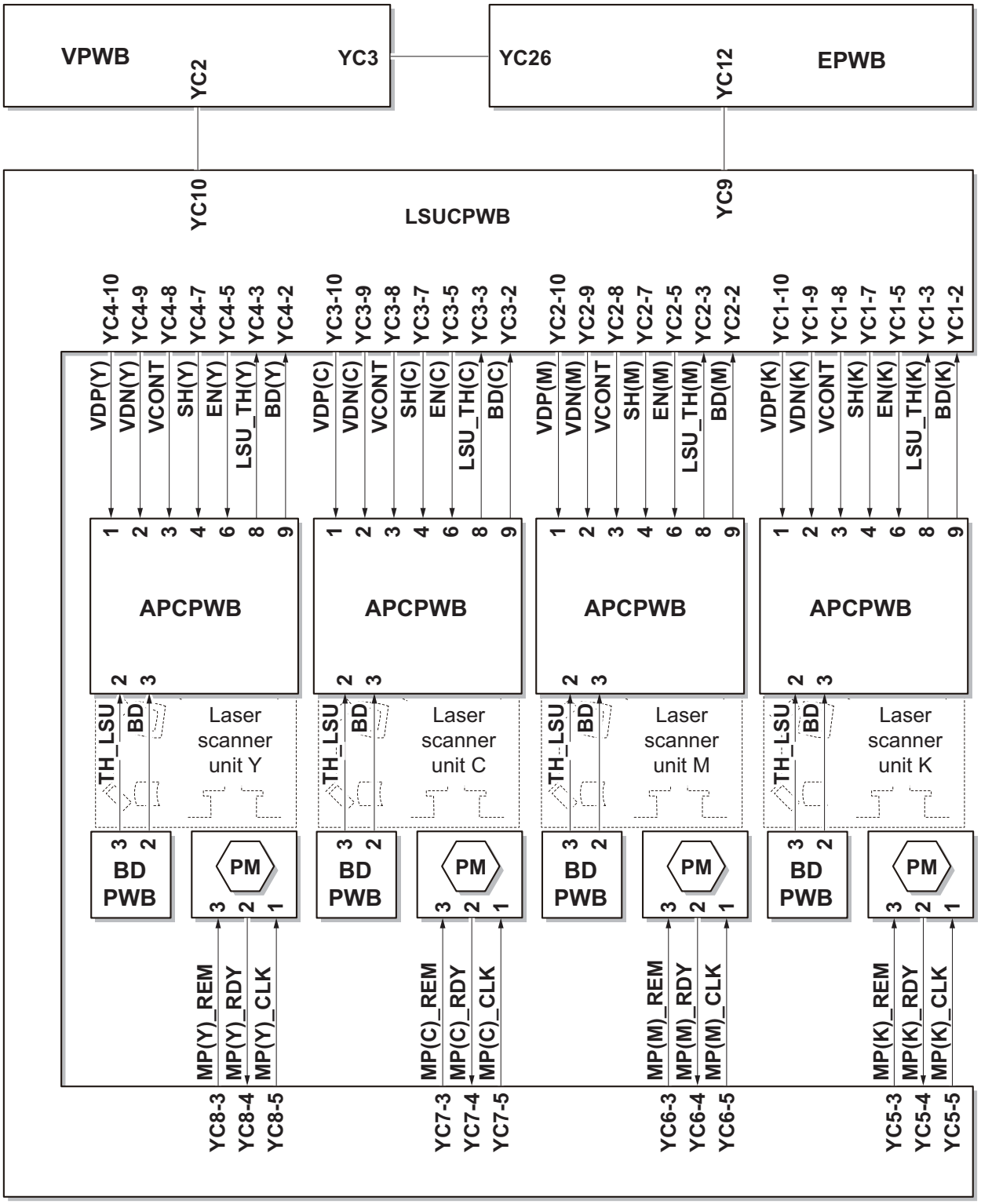

Figure 2-1-15 Laser scanner unit block diagram

2-1-5 Transfer/Separation section

The transfer/separation section consists of the intermediate transfer unit section and the secondary transfer roller section.

(1) Intermediate transfer unit section

The intermediate transfer unit section consists of the transfer cleaning unit, the transfer belt, and the four primary transfer rollers for respective color drums, and forms a full-color toner image by superimposing and transferring single-color toner images formed on each drum onto the transfer belt. Also with the ID sensors (IDS) mounted on the machine frame, the toner density on the transfer belt is measured.
The transfer cleaning unit collects toner remaining on the transfer belt after secondary transfer and forwards it as waste toner to the waste toner box.

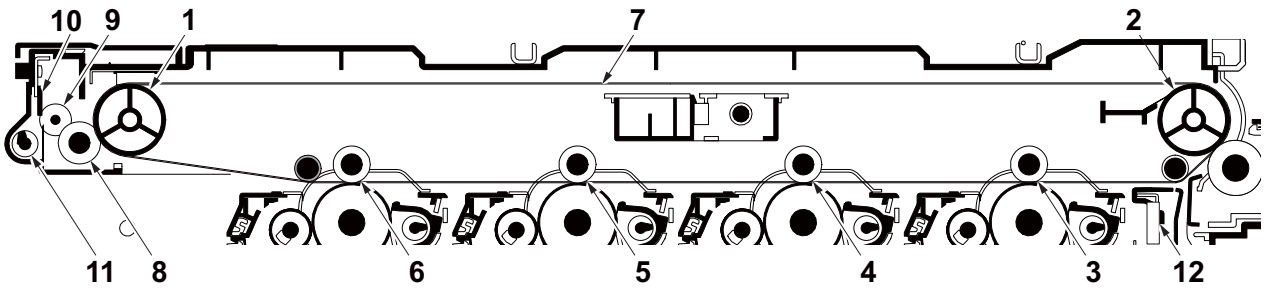

Figure 2-1-16 Inter mediate transfer unit section

1. Tension roller
2. Drive roller
3. Primary transfer roller K
4. Primary transfer roller M
5. Primary transfer roller C
6. Primary transfer roller Y
7. Transfer belt
8. Cleaning fur brush
9. Cleaning roller
10. Cleaning blade
11. Cleaning screw
12. ID sensors (IDS)

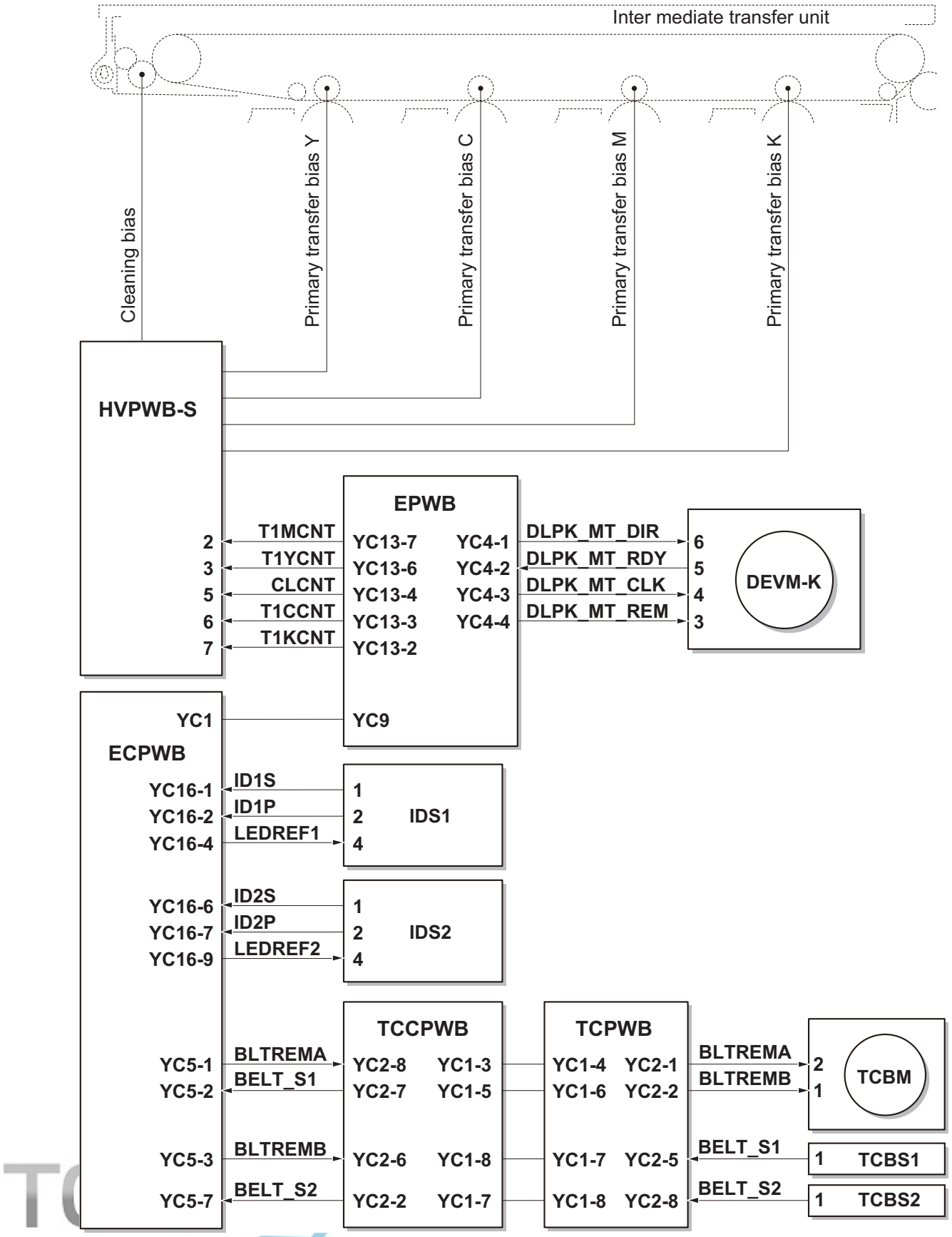

Figure 2-1-17 Intermediate transfer unit section block diagram

(2) Secondary transfer roller section

The secondary transfer roller section consists of the secondary transfer roller mounted to the paper conveying unit and the separation needle. To the secondary transfer roller, DC bias is applied from the high voltage PWB (HVPWB). The toner image formed on the transfer belt is transferred to the paper by the potential difference. Paper after transfer is separated from the drum by applying separation charging that is output from the high voltage PWB (HVPWB) to the separation electrode.

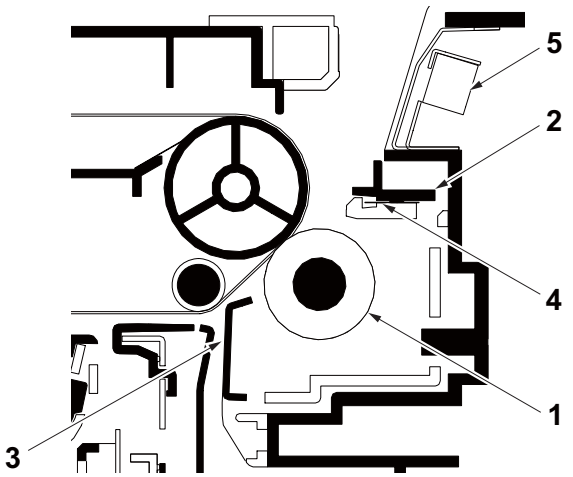

Figure 2-1-18 Secondary transfer roller section

1. Secondary transfer roller
2. Separation needle holder
3. Paper chute guide
4. Separation needle
5. Fuser pre sensor

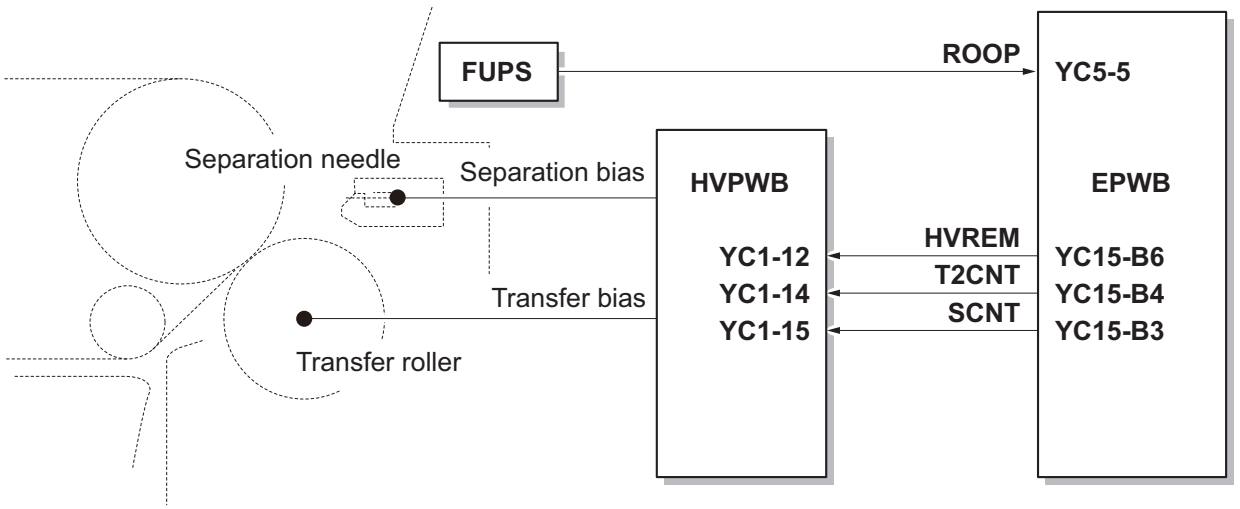

Figure 2-1-19 Secondary transfer roller section block diagram

2-1-6 Fuser section

The paper sent from the transfer/separation section is interleaved between the heat roller and the press roller. The heat roller is heated by the IH coil (IHC), and the toner is fused by heat and pressure and fixed onto the paper because the press roller is pressed by the fuser press spring. The surface temperature of heat roller is detected by the fuser thermistor1 (FTH1), fuser thermistor2 (FTH2) and the surface temperature of press roller is detected by the fuser thermistor3 (FTH3) and controlled by the engine PWB (EPWB). If the fuser section shows extremely high temperature, the power line will be shut off and the IH coil (IHC) is forced to turn off.

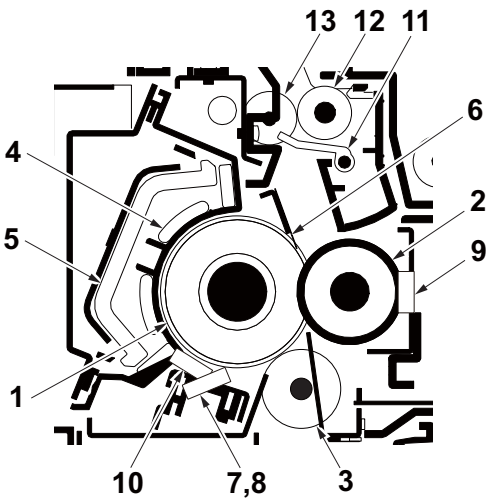

Figure 2-1-20 Fuser section

1. Heat roller
2. Press roller
3. Uniformity heat roller
4. IH coil (IHC)
5. Core
6. Separate plate
7. Fuser thermistor 1 (FTH1)
8. Fuser thermistor 2 (FTH2)
9. Fuser thermistor 3 (FTH3)
10. Fuser thermostat (FTS)
11. Actuator (eject sensor)
12. Eject roller
13. Eject pulley

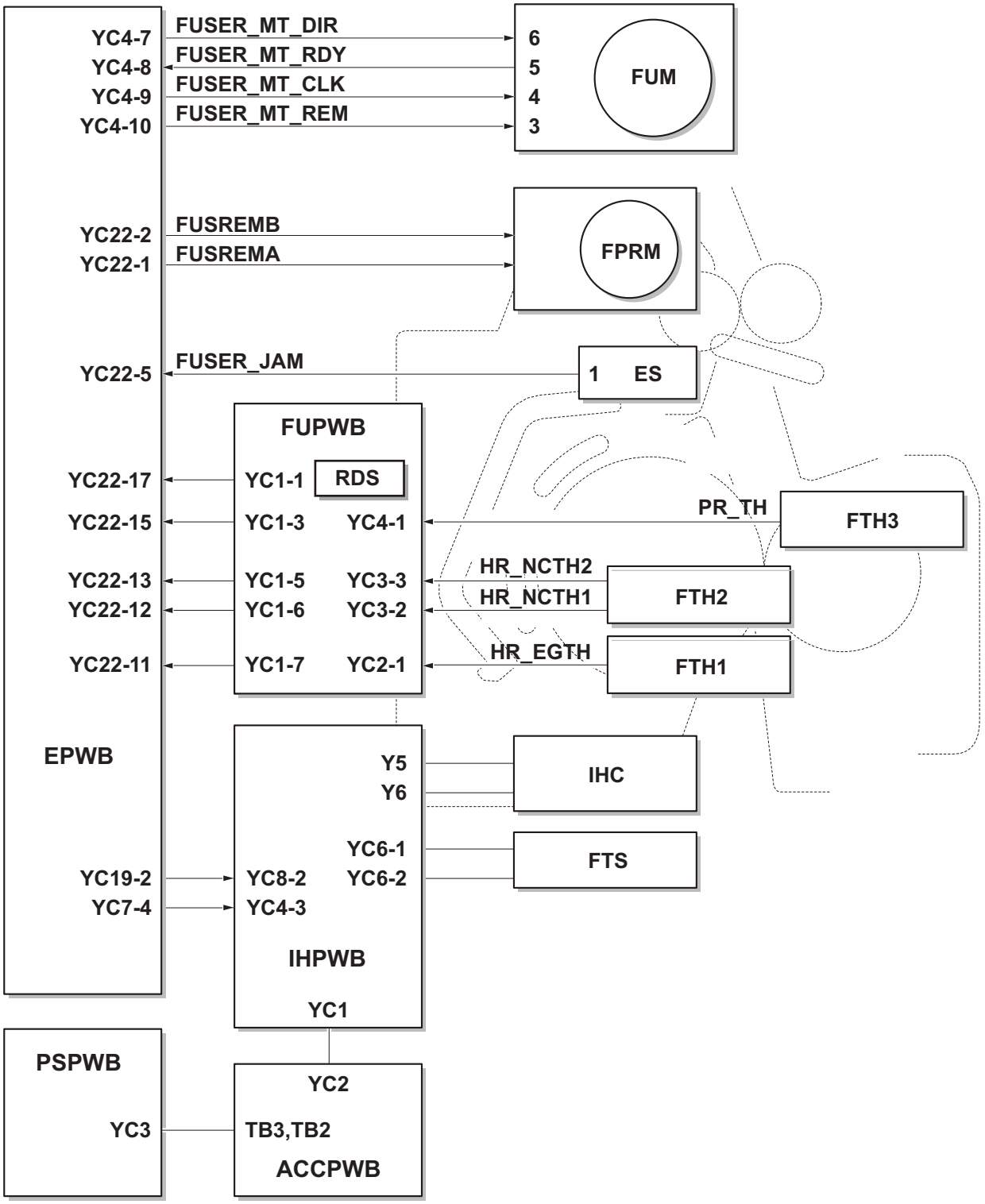

Figure 2-1-21 Fuser section block diagram

2-1-7 Eject/Feedshift section

The paper eject/feedshift section consists of the conveying path which sends the paper that has passed the fuser section to the inner tray, the job separator tray or the duplex conveying section.

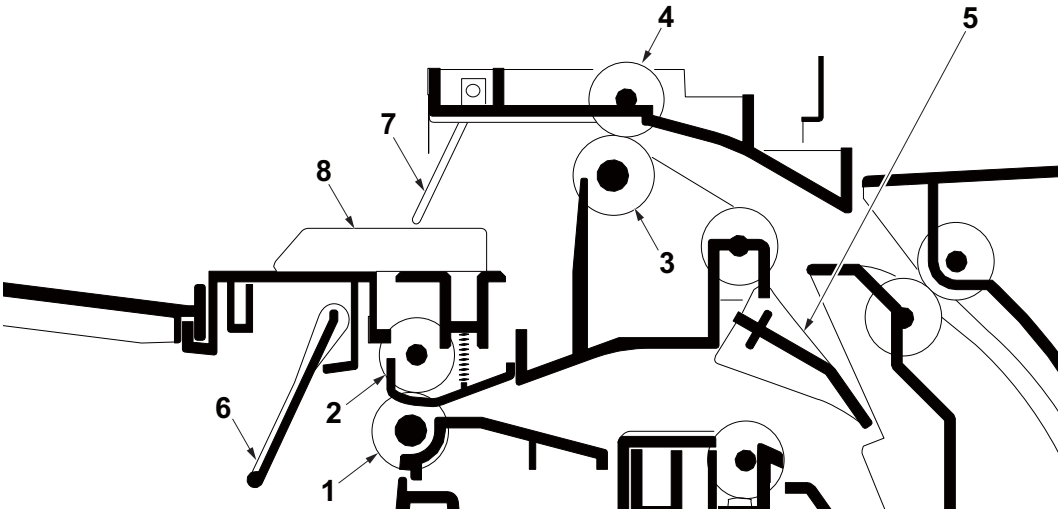

Figure 2-1-22 Eject/Feedshift section

1. Eject roller A
2. Eject pulley A
3. Eject roller B
4. Eject pulley B
5. Feedshift guide
6. Actuator (paper full sensor)
7. Actuator (job paper full sensor)
8. Actuator (job eject paper sensor)

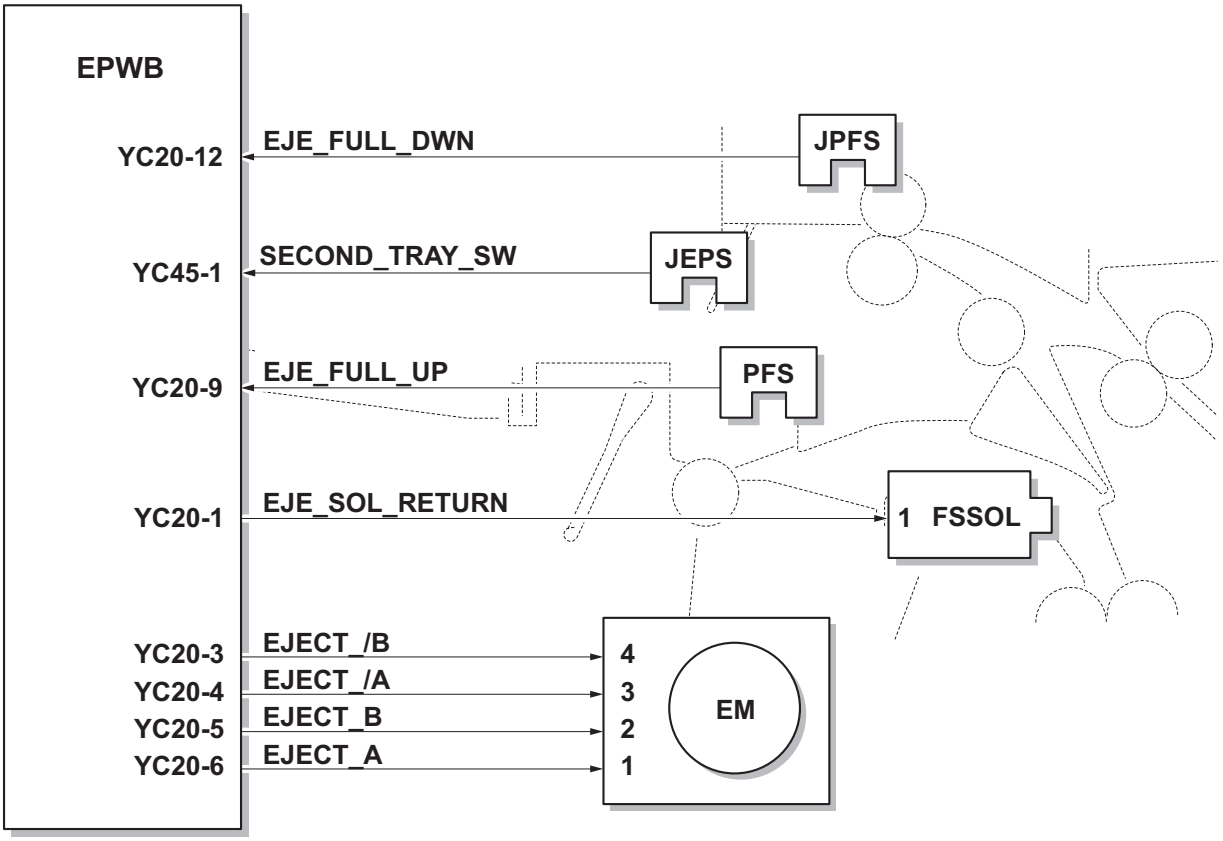

Figure 2-1-23 Eject/Feed shift section block diagram

2-1-8 Duplex conveying section

The duplex conveying section consists of conveying path which sends the paper sent from the eject/feedshift section to the paper feed/conveying section when duplex printing.

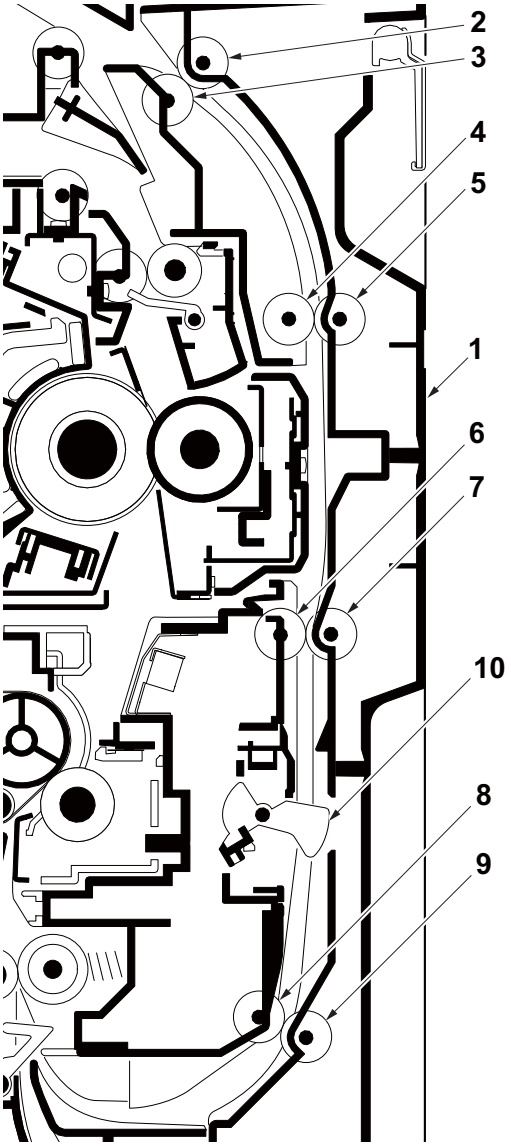

Figure 2-1-24 Duplex conveying section

1. Right cover 1
2. Duplex feed roller A
3. Duplex feed pulley A
4. Duplex feed roller B
5. Duplex feed pulley B
6. Duplex feed roller C
7. Duplex feed pulley C
8. Duplex feed roller D
9. Duplex feed pulley D
10. Actuater(duplex sensor)

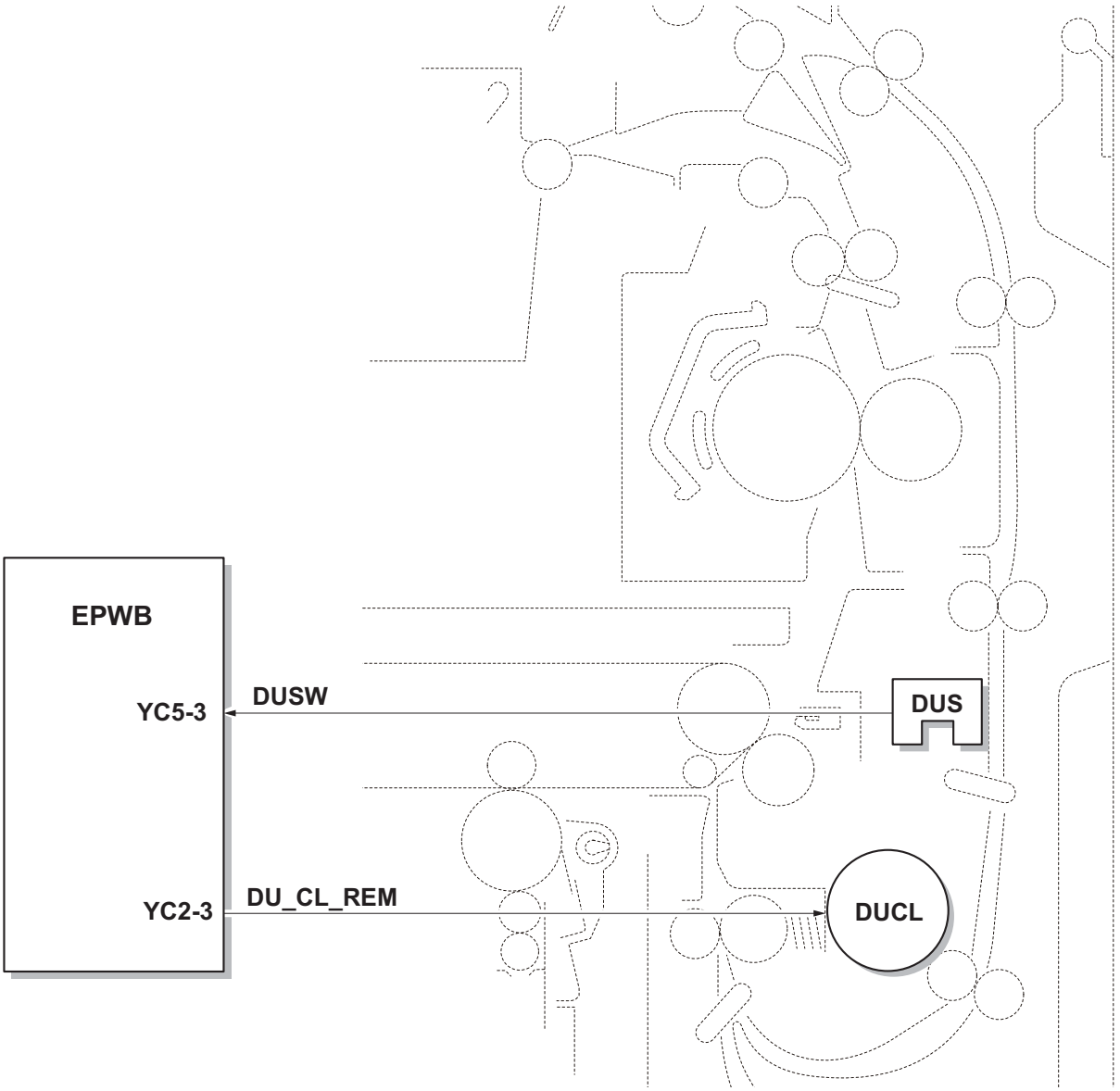

Figure 2-1-25 Duplex conveying section block diagram

2-1-9 Document processor

(1) Original feed section

The original feed section consists of the parts shown in figure. An original placed on the original tray is conveyed to the original conveying section. Original is fed by the rotation of the DP forwarding pulley and DP paper feed roller.

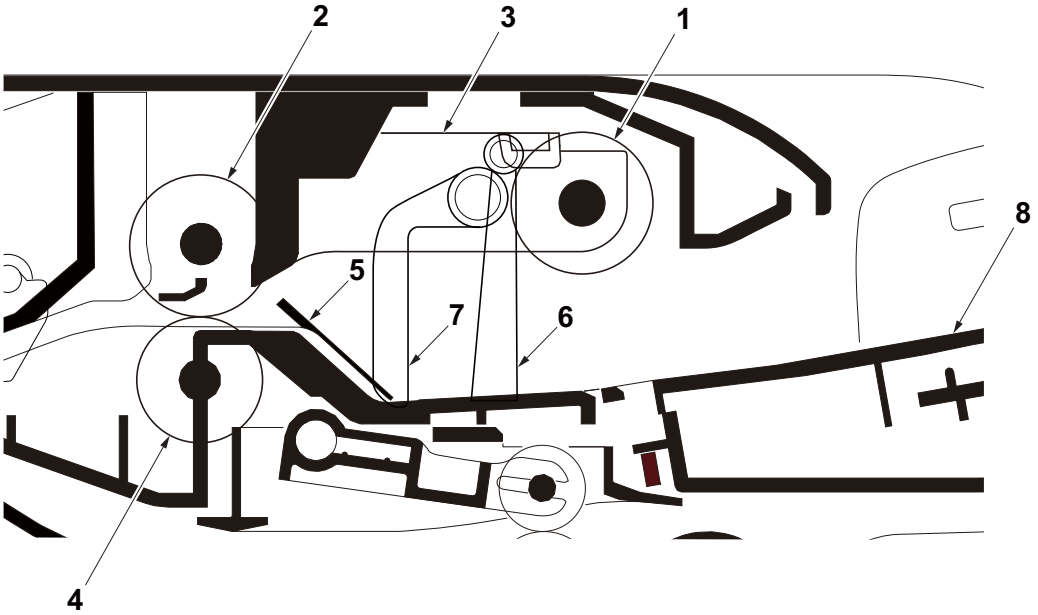

Figure 2-1-26 Original feed section

1. DP forwarding pulley
2. DP paper feed roller
3. DP feed holder
4. DP separation pulley
5. Front separation pad
6. Actuator (DP original sensor)
7. PF stopper
8. Original tray

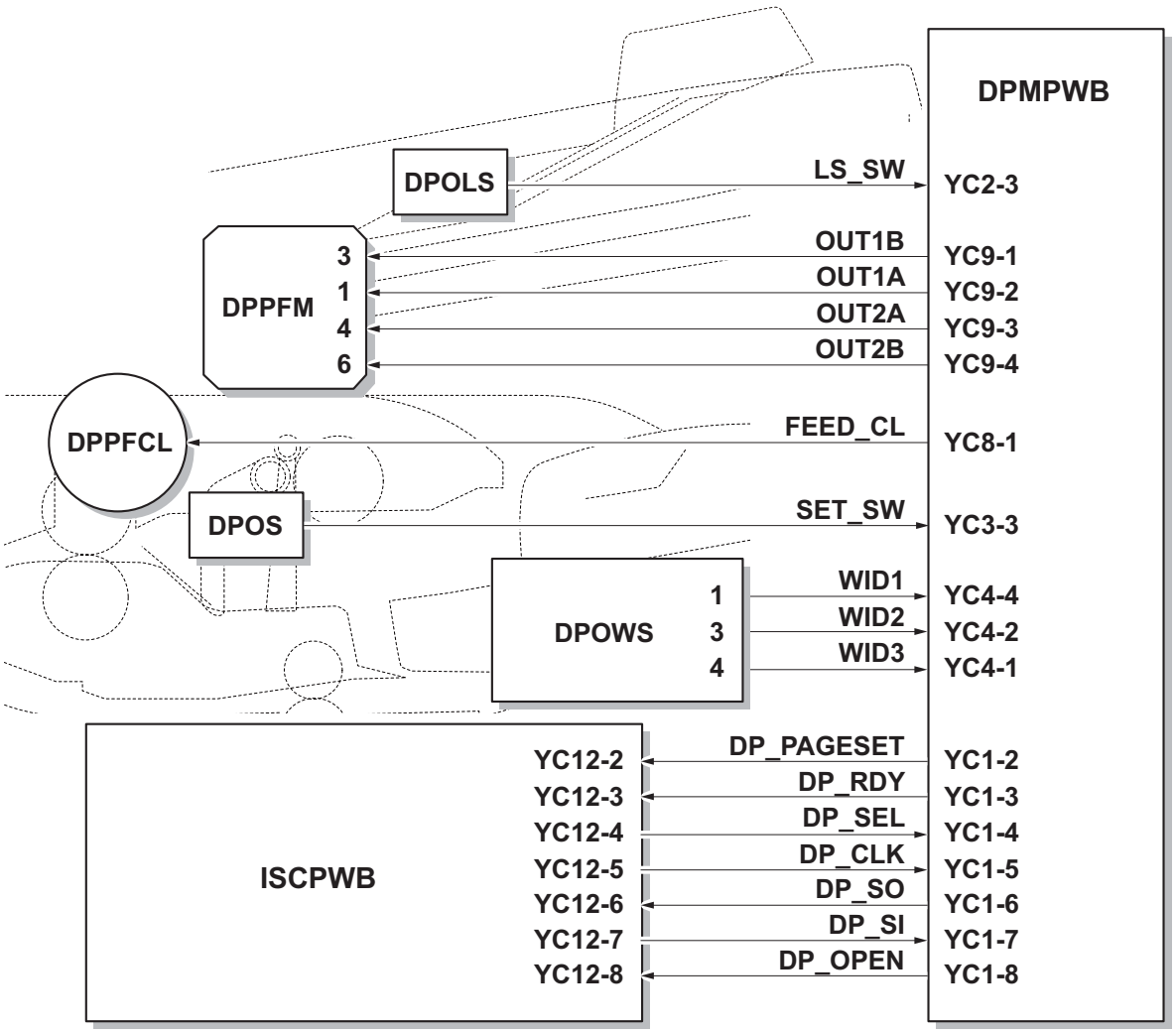

Figure 2-1-27 Original feed section block diagram

(2) Original conveying section

The original conveying section consists of the parts shown in figure. A conveyed original is scanned by the optical section (CCD) on the main machine when it passes through the slit glass of main machine.

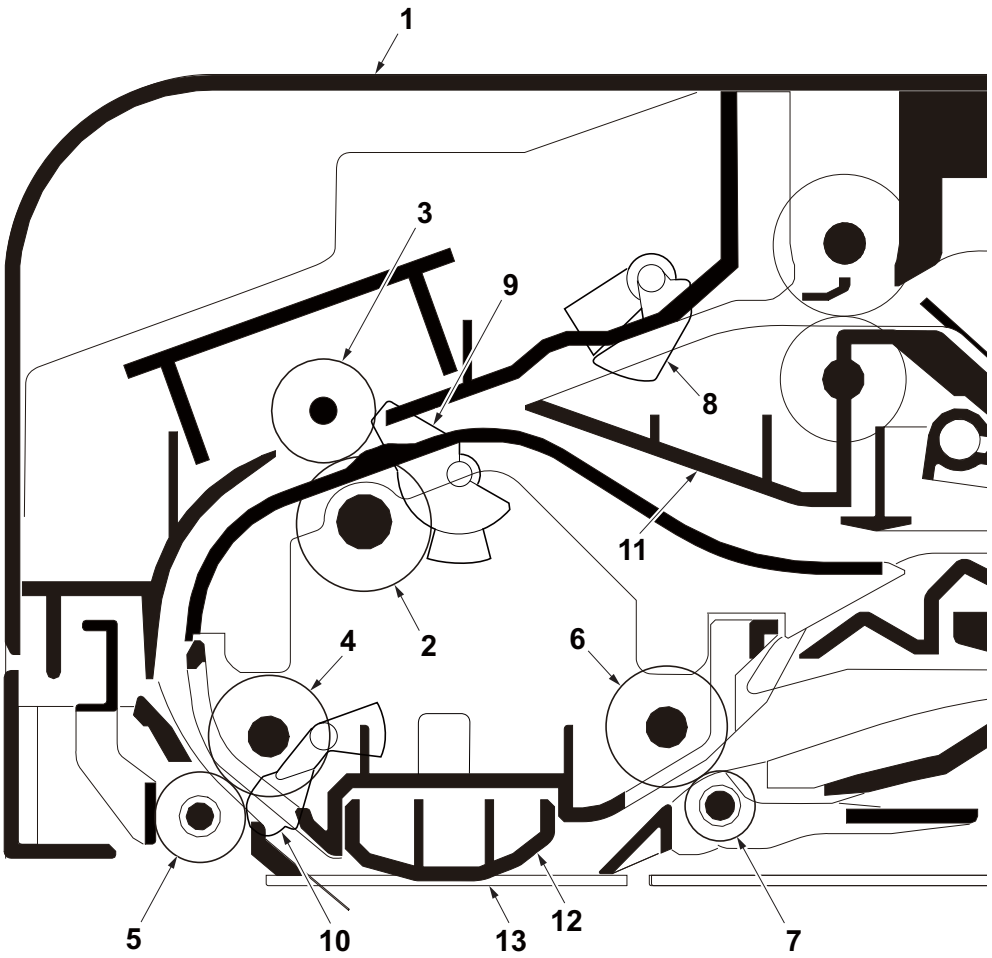

Figure 2-1-28 Original conveying section

1. DP top cover
2. DP registration roller
3. DP registration pulley
4. Conveying roller
5. Conveying pulley
6. Eject roller
7. Eject pulley
8. Actuator (DP paper feed sensor)
9. Actuator (DP registration sensor)
10. Actuator (DP timing sensor)
11. Switchback guide
12. Reading guide
13. Slit glass

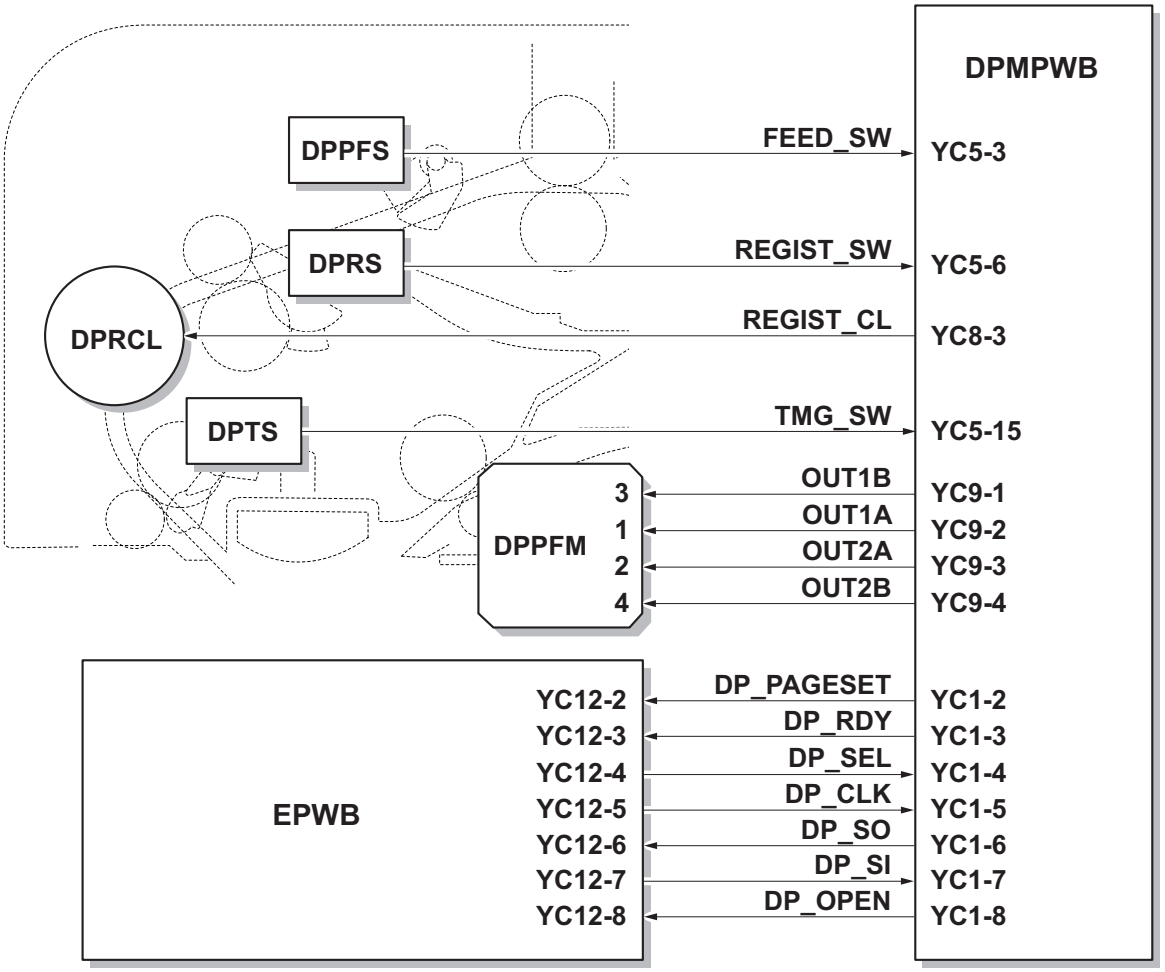

Figure 2-1-29 Original conveying section block diagram

(3) Original switchback/eject sections

The original switchback/eject sections consists of the parts shown in figure. An original of which scanning is complete is ejected to the original eject table by the eject roller. In the case of duplex switchback scanning, an original is conveyed temporarily to the switchback tray and conveyed again to the original conveying section by the switchback roller.

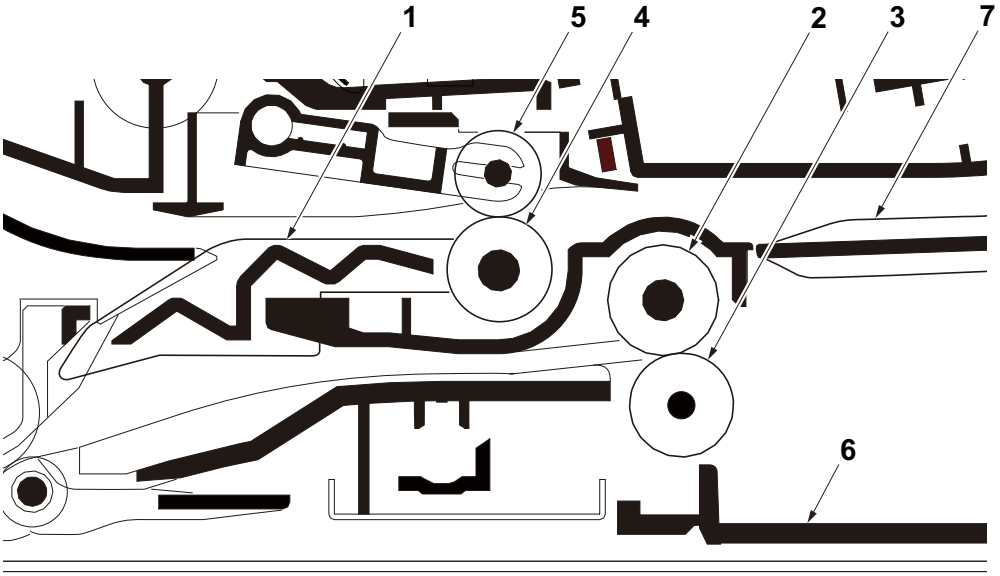

Figure 2-1-30 Original switchback/eject sections

1. Feedshift guide
2. Eject roller
3. Eject pulley
4. Switchback roller
5. Switchback pulley
6. Original eject table
7. Switchback tray

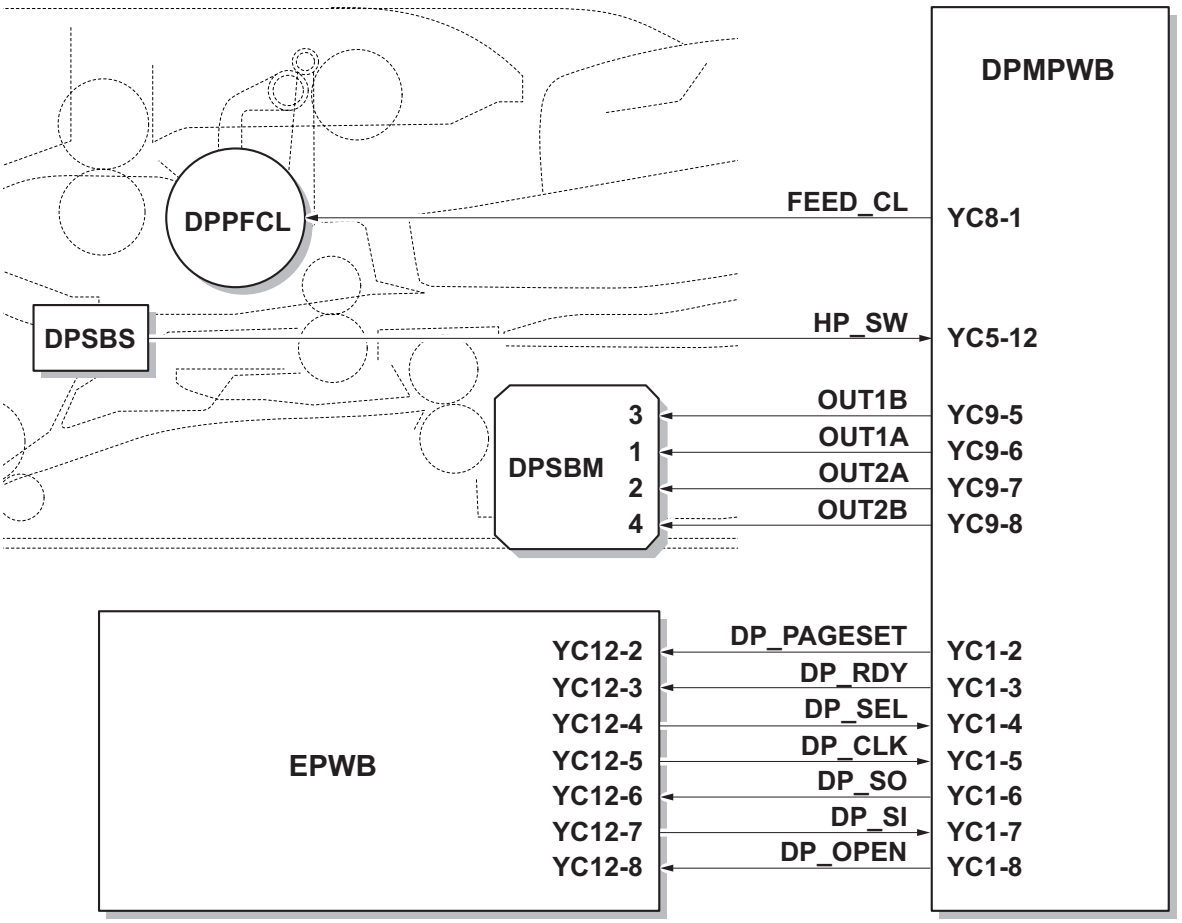

Figure 2-1-31 Original switchback/eject sections block diagram

This page is intentionally left blank.

2-2-1 Electrical parts layout

(1) PWBs

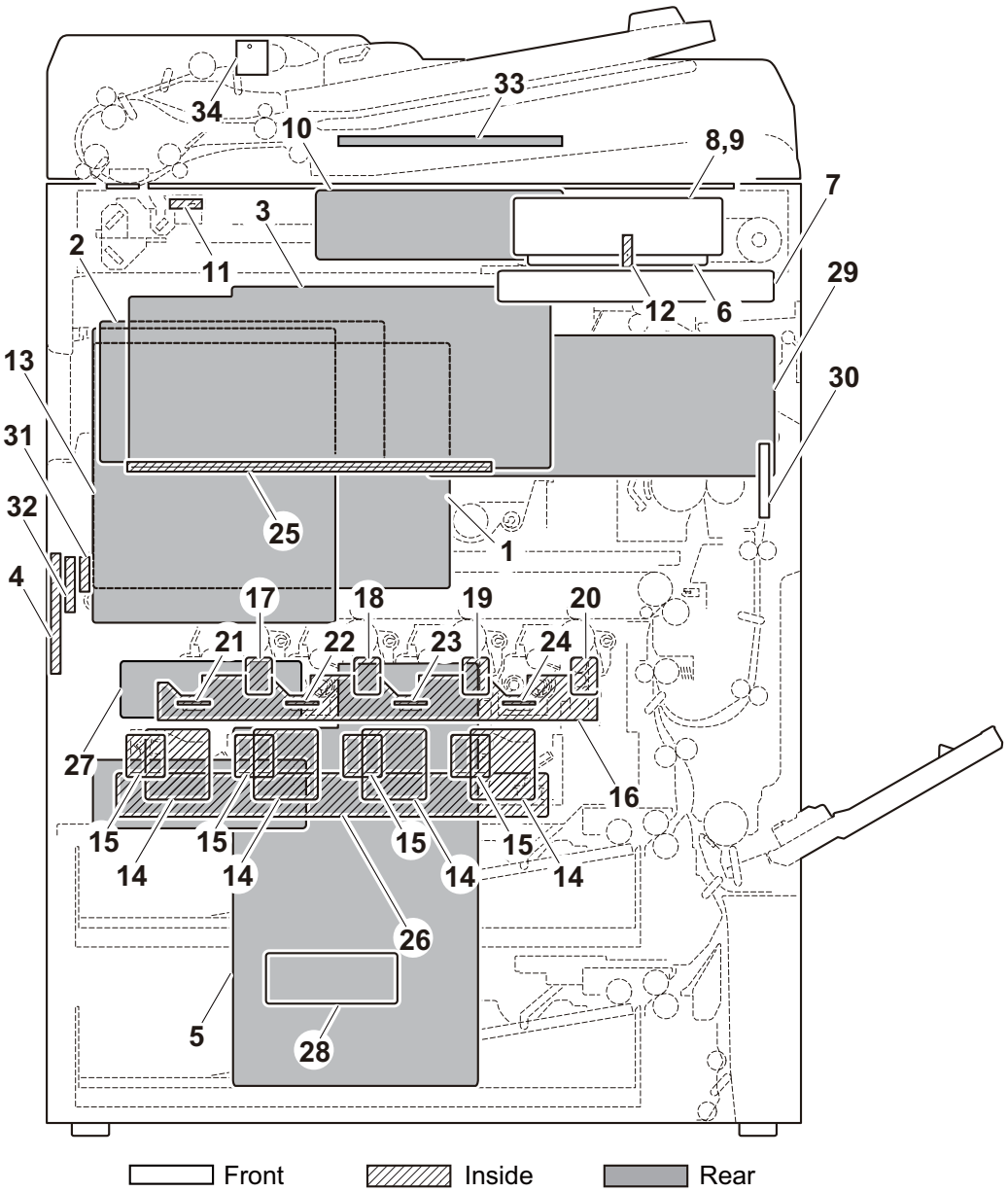

Figure 2-2-1 PWBs

1. Main PWB (MPWB) ..... Controls the software for print data processing and provides the interface with computers.
2. Engine PWB (EPWB)..... Controls printer hardware such as high voltage/bias output control, paper conveying system control, and fuser temperature control, etc.
3. High voltage PWB (HVPWB) ..... Generates main charging, developing bias, secondary transfer bias and separation bias.
4. High voltage PWB sub (HVPWB-S)..... Generates primary transfer bias, cleaning bias.

5. Power source PWB (PSPWB) ..... After full-wave rectification of AC power source input, switching for converting to 24 V DC for output. Controls the fuser heater.
6. Operation panel PWB main (OPPWB-M) ..... Consists of the LCD, LED indicators and key switches.
7. Operation panel PWB sub (OPPWB-S)..... Consists of the LED indicators and key switches.
8. LCD (LCD) ..... LCD display.
9. Touch panel (TP)..... Operates the operation panel.
10. ISC PWB (ISCPWB) ..... Controls the scanner section.
11. LED PWB (LEDPWB) ..... Exposes originals.
12. CCD PWB (CCDPWB)..... Reads the image of originals.
13. Video PWB (VPWB)..... Controls the output of LSU, the paper feed system and the option system.
14. APC PWB (APCPWB) ..... Generates and controls the laser beam.
15. BD PWB (BDPWB) ..... Controls horizontal synchronizing timing of laser beam.
16. Drum connect PWB (DRCPWB) ..... Consists of wiring relay circuit between engine PWB and the drum unit.
17. Drum PWB Y (DRPWB-Y) ..... Relays wirings from electrical components on the drum unit for yellow.
    Stores the drum's identifications a EEPROM.
18. Drum PWB C (DRPWB-C)..... Relays wirings from electrical components on the drum unit for cyan.
    Stores the drum's identifications a EEPROM.
19. Drum PWB M (DRPWB-M) ..... Relays wirings from electrical components on the drum unit for magenta.
    Stores the drum's identifications a EEPROM.
20. Drum PWB K (DRPWB-K) ..... Relays wirings from electrical components on the drum unit for black.
    Stores the drum's identifications a EEPROM.
21. Developer PWB Y (DEVPWB-Y) ..... Relays wirings from electrical components on the developing unit for yellow.
    Stores the developer's identifications a EEPROM.
22. Developer PWB C (DEVPWB-C) ..... Relays wirings from electrical components on the developing unit for cyan.
    Stores the developer's identifications a EEPROM.
23. Developer PWB M (DEVPWB-M) ..... Relays wirings from electrical components on the developing unit for magenta.
    Stores the developer's identifications a EEPROM.
24. Developer PWB K (DEVPWB-K) ..... Relays wirings from electrical components on the developing unit for black.
    Stores the developer's identifications a EEPROM.
25. RFID PWB (RFPWB) ..... Reads the container information.
26. LSU connect PWB (LSUCPWB) ..... Consists of wiring relay circuit between Video PWB, engine connect PWB and LSU unit.
27. Engine connect PWB (ECPWB) ..... Consists of wiring relay circuit between engine PWB and drum connect PWB, transfer connect PWB, option unit.
28. AC connect PWB (ACCPWB) ..... Branch of AC power supply input, and relay.
29. IH PWB (IHPWB) ..... Controls the temperature of the fuser unit.
30. Fuser PWB (FUPWB) ..... Relays wirings from electrical components on the fuser unit.
    Fuser individual information in EEPROM storage.
31. Transfer PWB (TCPWB) ..... Relays wirings from electrical components on the intermediate transfer unit.
    Intermediate transfer individual information in EEPROM storage.

32. Transfer connect PWB (TCCPWB)..... Consists of wiring relay circuit between engine connect PWB and Transfer PWB.
33. DP main PWB (DPMPWB) ..... Consists the motor and clutch driver circuit and wiring relay circuit.
34. DP LED PWB (DPLEDPWB) ..... Displays the presence of the original.

PWB names conversion

No.	Name used in service manual	Name used in parts list
1	Main PWB (MPWB)	PARTS PWB MAIN ASSY SP
2	Engine PWB (EPWB)	PARTS PWB ENGINE ASSY SP
3	High voltage PWB (HVPWB)	PARTS HVU1 SP
4	High voltage PWB sub (HVPWB-S)	PARTS HVU2 SP
5	Power source PWB (PSPWB)	PARTS LVU MAIN 200 SP
6	Operation panel PWB main (OPPWB-M)	PARTS PWB PANEL MAIN ASSY SP
7	Operation panel PWB sub (OPPWB-S)	-
8	LCD (LCD)	PARTS LCD COLOR SP
9	Touch panel (TP)	-
10	ISC PWB (ISCPWB)	PARTS PWB ISC ASSY SP
11	LED PWB (LEDPWB)	-
12	CCD PWB (CCDPWB)	-
13	Video PWB (VPWB)	PARTS PWB VIDEO ASSY SP
14	APC PWB (APCPWB)	-
15	BD PWB (BDPWB)	-
16	Drum connect PWB (DRCPWB)	PARTS PWB DRUM DLP CONNECT ASSY SP
17	Drum PWB Y (DRPWB-Y)	-
18	Drum PWB C (DRPWB-C)	-
19	Drum PWB M (DRPWB-M)	-
20	Drum PWB K (DRPWB-K)	-
21	Developer PDB Y (DEVPWB-Y)	-
22	Developer PDB C (DEVPWB-C)	-
23	Developer PDB M (DEVPWB-M)	-
24	Developer PDB K (DEVPWB-K)	-
25	RFID PWB (RFIDPWB)	PARTS PWB RFID ASSY SP
26	LSU connect PWB (LSUCPWB)	PARTS PWB LSU CONNECT ASSY SP
27	Engine connect PWB (ECPWB)	PARTS PWB ENGINE CONNECT ASSY SP

No.	Name used in service manual	Name used in parts list
28	AC connect PWB (ACCPWB)	-
29	IH PWB (IHPWB)	PARTS PWB IH 200 ASSY SP
30	Fuser PWB (FUPWB)	-
31	Transfer PWB (TCPWB)	-
32	Transfer connect PWB (TCCPWB)	PARTS PWB TRANSFER CONNECT ASSY SP
33	DP main PWB (DPMPWB)	PARTS PWB DRIVE ASSY SP
34	DP LED PWB (DPLEDPWB)	PARTS PWB LED ASSY SP

(2) Switches and sensors

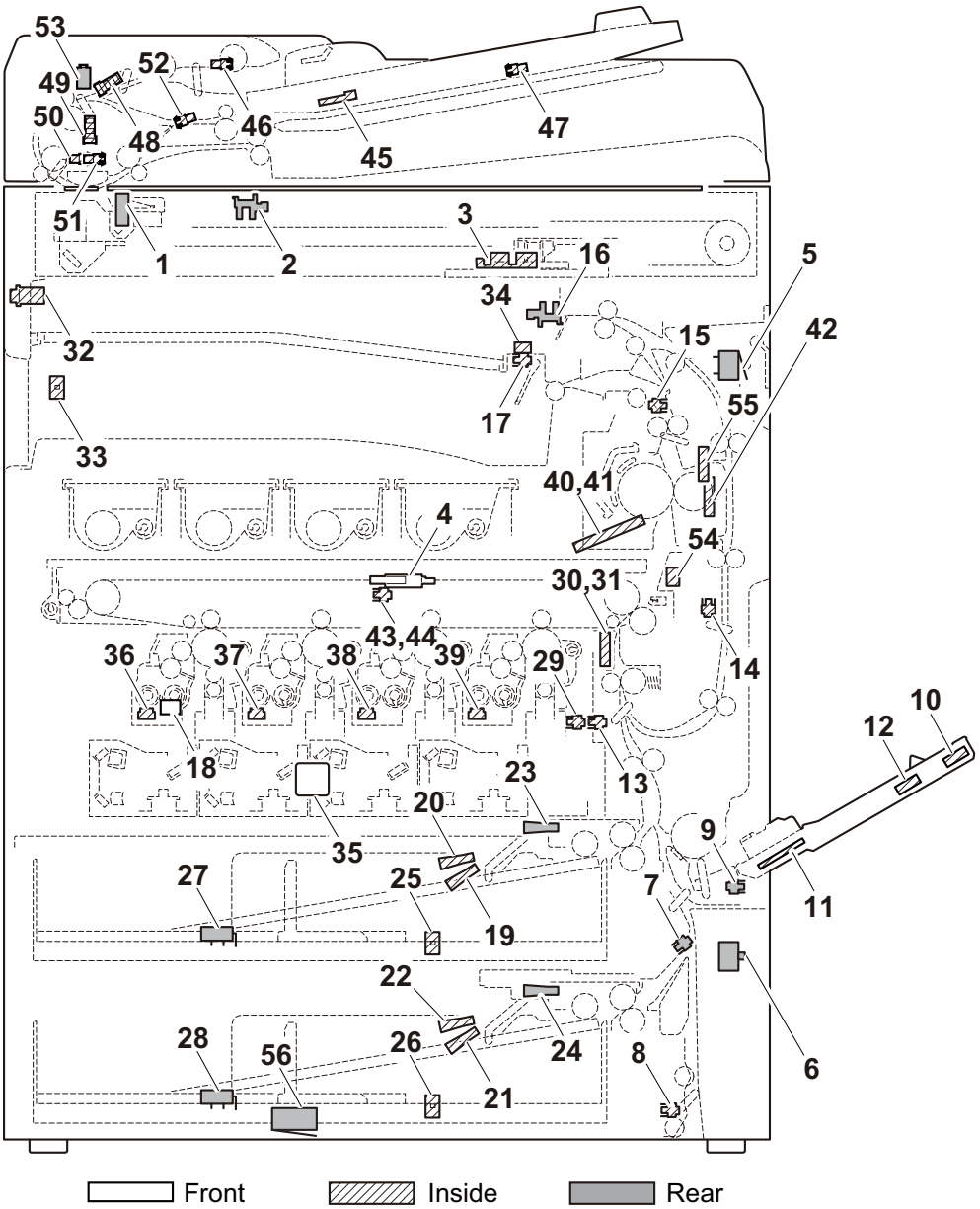

Figure 2-2-2 Switches and sensors

1. Home position sensor (HPS) ..... Detects the ISU in the home position.
2. Original detection switch (ODSW) ..... Operates the original size detection sensor.
3. Original size sensor (OSS) ..... Detects the size of the original.
4. Front cover switch (FCSW)..... Detects the opening and closing of the front cover.
5. Right cover switch 1 (RCSW1) ..... Detects the opening and closing of the right cover 1.
6. Right cover switch 2 (RCSW2) ..... Detects the opening and closing of the right cover 2.
7. Feed sensor 1 (FS1)..... Detects a paper misfeed in the vertical conveying section.
8. Feed sensor 2 (FS2)..... Detects a paper misfeed in the vertical conveying section.
9. MP paper sensor (MPPS)..... Detects the presence of paper on the MP tray.
10. MP sub tray detection switch (MPTDSW)..... Detects the position of the MP sub tray.
11. MP paper width switch (MPPWSW)..... Detects the width of paper in the MP tray.
12. MP paper length switch (MPPLSW)..... Detects the length of paper in the MP tray.

13. Registration sensor (RS)..... Controls the secondary paper feed start timing.
14. Duplex sensor (DUS)..... Detects a paper jam in the duplex section.
15. Eject sensor (ES)..... Detects a paper misfeed in the fuser or eject section.
16. Job paper full sensor (JPFS) ..... Detects the paper full in the job separator tray.
17. Paper full sensor (PFS)..... Detects the paper full in the inner tray.
18. Waste toner sensor (WTS)..... Detects when the waste toner box is full.
19. Paper sensor 1 (PS1) ..... Detects the presence of paper in the cassette 1.
20. Paper sensor 2 (PS2) ..... Detects the presence of paper in the cassette 1.
21. Paper sensor 3 (PS3) ..... Detects the presence of paper in the cassette 2.
22. Paper sensor 4 (PS4) ..... Detects the presence of paper in the cassette 2.
23. Lift sensor 1 (LS1)..... Detects activation of upper limit of the bottom plate in the cassette 1.
24. Lift sensor 2 (LS2)..... Detects activation of upper limit of the bottom plate in the cassette 2.
25. Paper size width switch 1 (PWSW1)..... Detects the width of paper in the cassette 1.
26. Paper size width switch 2 (PWSW2)..... Detects the width of paper in the cassette 2.
27. Paper size length switch 1 (PLSW1) .... Detects the length of paper in the cassette 1.
28. Paper size length switch 2 (PLSW2) .... Detects the length of paper in the cassette 2.
29. ID shutter sensor (IDSS)..... Detects the position of the iD shutter.
30. ID sensor 1 (IDS1) ..... Measurement of density of toner at calibration.
31. ID sensor 2 (IDS2) ..... Measurement of density of toner at calibration.
32. Main power switch (MSW) ..... Turns ON/OFF the AC power source.
33. Bridge detection switch (BRDSW) ..... Detects the presence of the bridge.
34. Job eject papersensor (JEPS) ..... Detects the presence of paper in the job separator.
35. Temperature sensor (TEMS)..... Detects temperature and absolute humidity in machine.
36. Toner sensor Y (TS-Y) ..... Detects the amount of toner remainder in the developing unit Y.
37. Toner sensor C (TS-C)..... Detects the amount of toner remainder in the developing unit C.
38. Toner sensor M (TS-M)..... Detects the amount of toner remainder in the developing unit M.
39. Toner sensor K (TS-K) ..... Detects the amount of toner remainder in the developing unit K.
40. Fuser thermistor 1 (FTH1) ..... Detects the heat roller temperature.(edge)
41. Fuser thermistor 2 (FTH2) ..... Detects the heat roller temperature.(center)
42. Fuser thermistor 3 (FTH3) ..... Detects the press roller temperature.
43. TC belt sensor 1 (TCBS1)..... Detects the position of the primary transfer belt.
44. TC belt sensor 2 (TCBS2)..... Detects the position of the primary transfer belt.
45. DP original size width sensor (DPOWS)..... Detects the width of the original.
46. DP original sensor (DPOS)..... Detects the presence of an original.
47. DP original size length sensor (DPOLS) ..... Detects the length of the original.
48. DP paper feed sensor (DPPFS)..... Detects a paper misfeed.
49. DP registration sensor (DPRS)..... Controls the secondary paper feed start timing.
50. DP timing sensor (DPTS)..... Detects the original scanning timing.
51. DP open/close sensor (DPOCS)..... Detects the opening/closing of the DP.
52. DP switchback sensor (DPSBS)..... Detects the switchback guide in the home position.
53. DP interlock switch (DPILSW) ..... Shuts off 24 V DC power line when the dp top coveris opened.
54. Fuser pre sensor (FUPS)..... Detects the JAM on this side of fuser.
55. Fuser roller rotation detection sensor (FRS) ..... Detects the rotation of the fuser roller.
56. Paper feeder detection switch (PFDSW)..... Detects the presence of the paper feeder.

(3) Motors

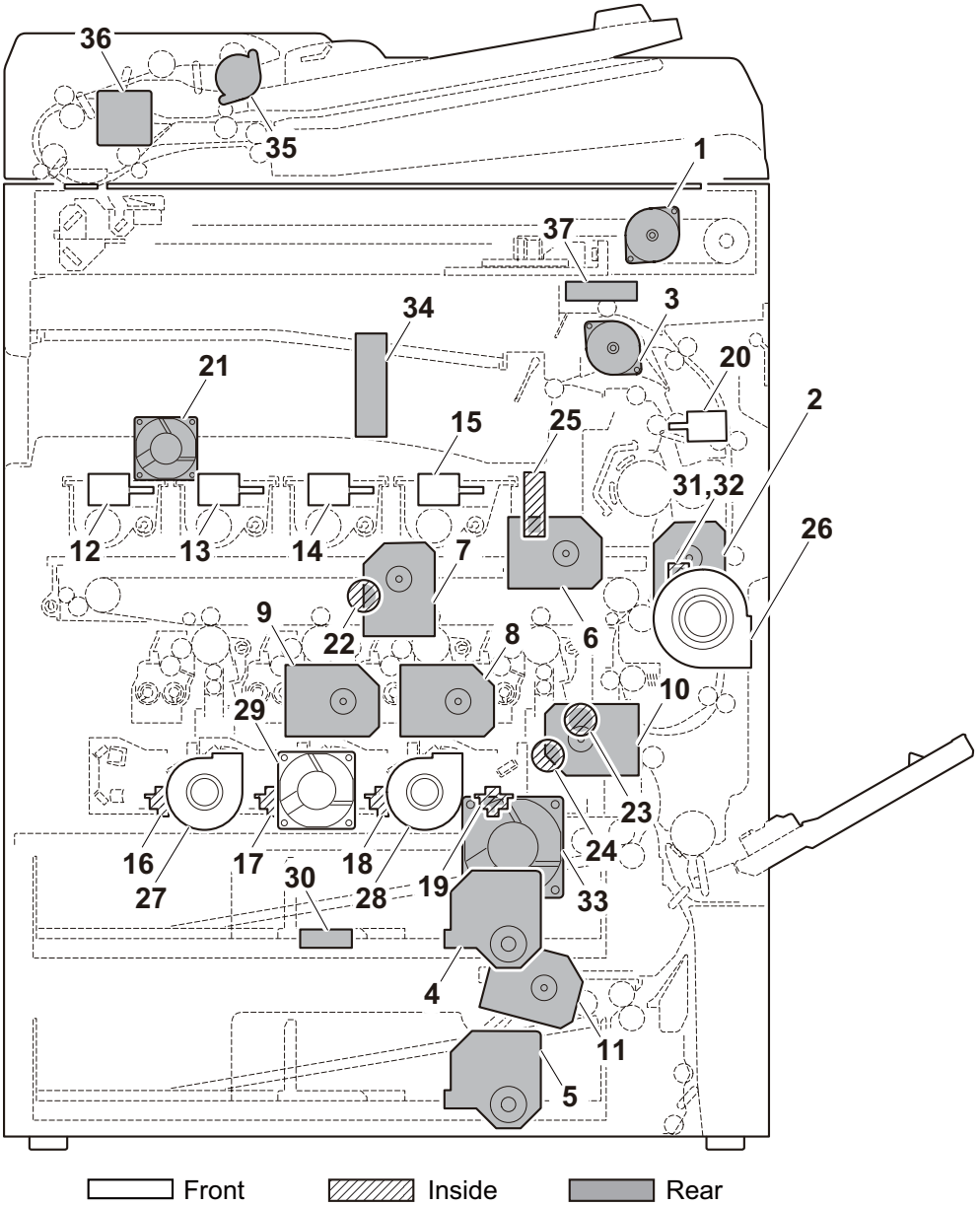

Figure 2-2-3 Motors

1. ISU motor (ISUM) ..... Drives the ISU.
2. Fuser motor (FUM) ..... Drives the fuser section.
3. Eject motor (EM) ..... Drives the eject section.
4. Lift motor 1 (LM1)..... Operates the bottom plate in the cassette 1.
5. Lift motor 2 (LM2)..... Operates the bottom plate in the cassette 2.
6. Drum motor K (DRM-K) ..... Drives the drum unit K.
7. Drum motor CMY (DRM-CMY) ..... Drives the drum unit CMY.
8. Developer motor K (DEVM-K)..... Drives the developer unit K.
9. Developer motor CMY (DEVM-CMY) ... Drives the developer unit CMY.
10. Conveying motor 1 (CM1)..... Drives the paper feed section and conveying section.
11. Conveying motor 2 (CM2)..... Drives the paper feed section and conveying section.
12. Toner motor Y (TM-Y) ..... Replenishes toner to the developer unit Y.
13. Toner motor C (TM-C)..... Replenishes toner to the developer unit C.

14. Toner motor M (TM-M) ..... Replenishes toner to the developer unit M.
15. Toner motor K (TM-K) ..... Replenishes toner to the developer unit K.
16. Polygon motor Y (PM-Y) ..... Drives the polygon mirror Y.
17. Polygon motor C (PM-C)..... Drives the polygon mirror C.
18. Polygon motor M (PM-M)..... Drives the polygon mirror M.
19. Polygon motor K (PM-K) ..... Drives the polygon mirror K.
20. Fuser press release motor (FPRM) ..... Drives the pressure release system of the fuser.
21. Controller fan motor (CONFM)..... Cools the controller section.
22. Transfer belt motor (TCBM) ..... Drives the transfer belt.
23. ID shutter motor (IDSM)..... Drives the ID sensor cleaning section.
24. LSU cleaning motor (LSUCM) ..... Drives the LSU cleaning section.
25. Container fan motor (CFM) ..... Cools the containers and the IH PWB.
26. Developer fan motor 1 (DEVFM1) ..... Cools the developer section.
27. Developer fan motor 2 (DEVFM2) ..... Cools the developer section.
28. Developer fan motor 3 (DEVFM3) ..... Cools the developer section.
29. LSU fan motor (LSUFM) ..... Cools the LSU section.
30. Power source fan motor (PSFM) ..... Cools the power source PWB.
31. Fuser fan motor 1 (FUFM1) ..... Cools the fuser and eject sections.
32. Fuser fan motor 2 (FUFM2) ..... Cools the fuser and eject sections.
33. Imaging fan motor (IMGFM)..... Cools the imaging section.
34. IH fan motor (IHFM) ..... Cools the IH PWB.
35. DP paper feed motor (DPPFM)..... Drives the original feed section.
36. DP switchback motor (DPSBM) ..... Drives the original switchback section.
37. Eject fan motor (EFM)..... Disperses steam.

(4) Others

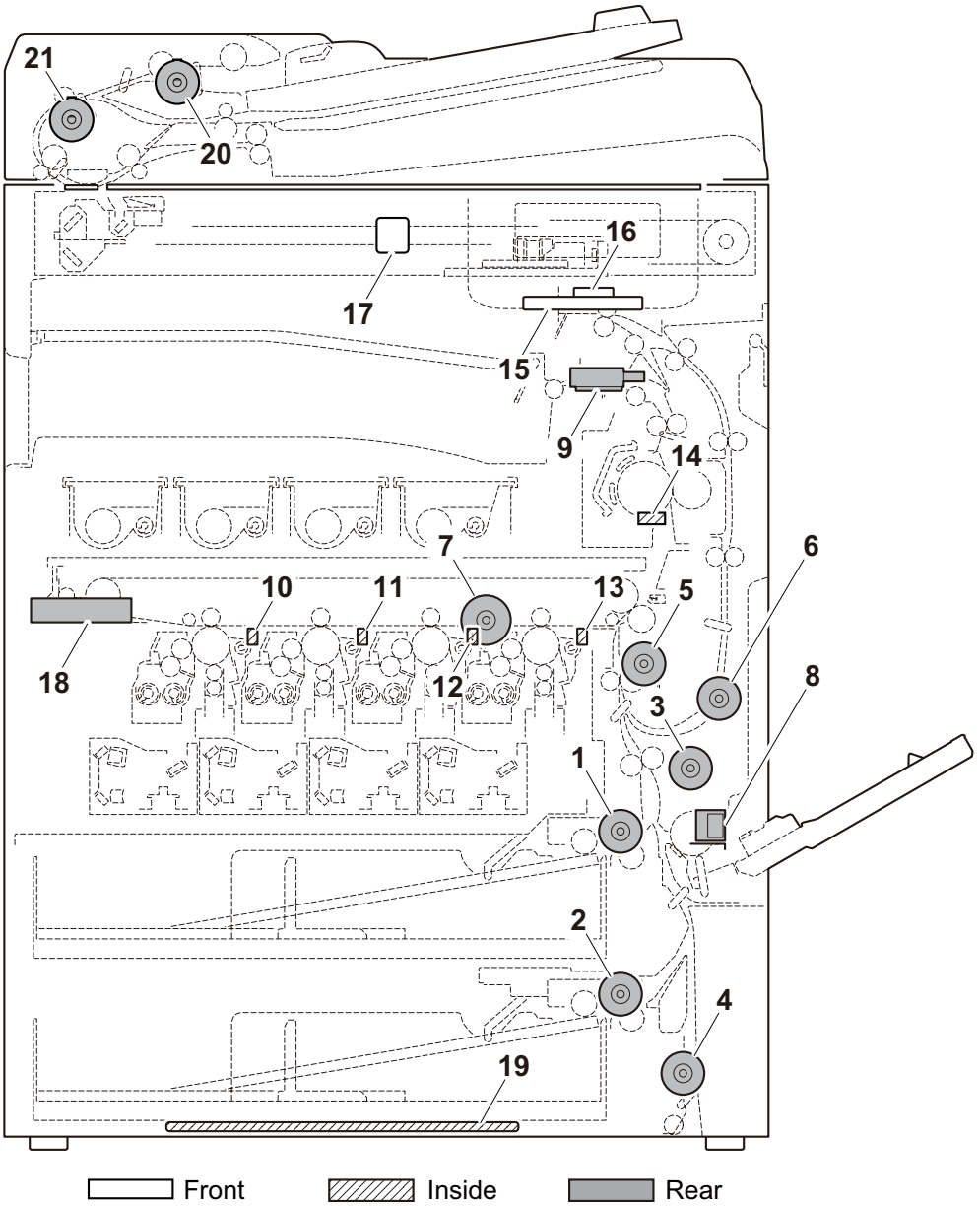

Figure 2-2-4 Others

1. Paper feed clutch 1 (PFCL1) ..... Controls the primary paper feed from cassette 1.
2. Paper feed clutch 2 (PFCL2) ..... Controls the primary paper feed from cassette 2.
3. Mid clutch 1 (MCL1)..... Controls the paper conveying.
4. Mid clutch 2 (MCL2)..... Controls the paper conveying.
5. Registration clutch (RCL)..... Controls the secondary paper feed.
6. Duplex clutch (DUCL) ..... Controls the drive of the duplex feed roller.
7. Developer stop clutch (DEVSCL)..... Controls the drive of the developer.
8. MP solenoid (MPSOL) ..... Controls the MP bottom plate.
9. Feedshift solenoid (FSSOL)..... Operates the feedshift guide.
10. Exposure lamp (EL) ..... Exposes originals.
11. Cleaning lamp Y (CL-Y)..... Eliminates the residual electrostatic charge on the drum.
12. Cleaning lamp C (CL-C)..... Eliminates the residual electrostatic charge on the drum.
13. Cleaning lamp M (CL-M)..... Eliminates the residual electrostatic charge on the drum.
14. Cleaning lamp K (CL-K)..... Eliminates the residual electrostatic charge on the drum.

15. Fuser thermostat (FTS)..... Prevents overheating of the heat roller.
16. Speaker (SPK) ..... Generates an error sound.
17. Job LED (JLED) ..... Displays the presence of a paper in the job separator.
18. Hard disk (HDD)..... Storages the image data and information of job accounting mode.
19. Cassette heater (CH) ..... Dehumidifies the cassette section.
20. DP paper feed clutch (DPPFCL)..... Controls the drive of the DP forwarding pulley and DP paper feed roller.
21. DP registration clutch (DPRCL) ..... Controls the secondary paper feed.

2-3-1 Main PWB

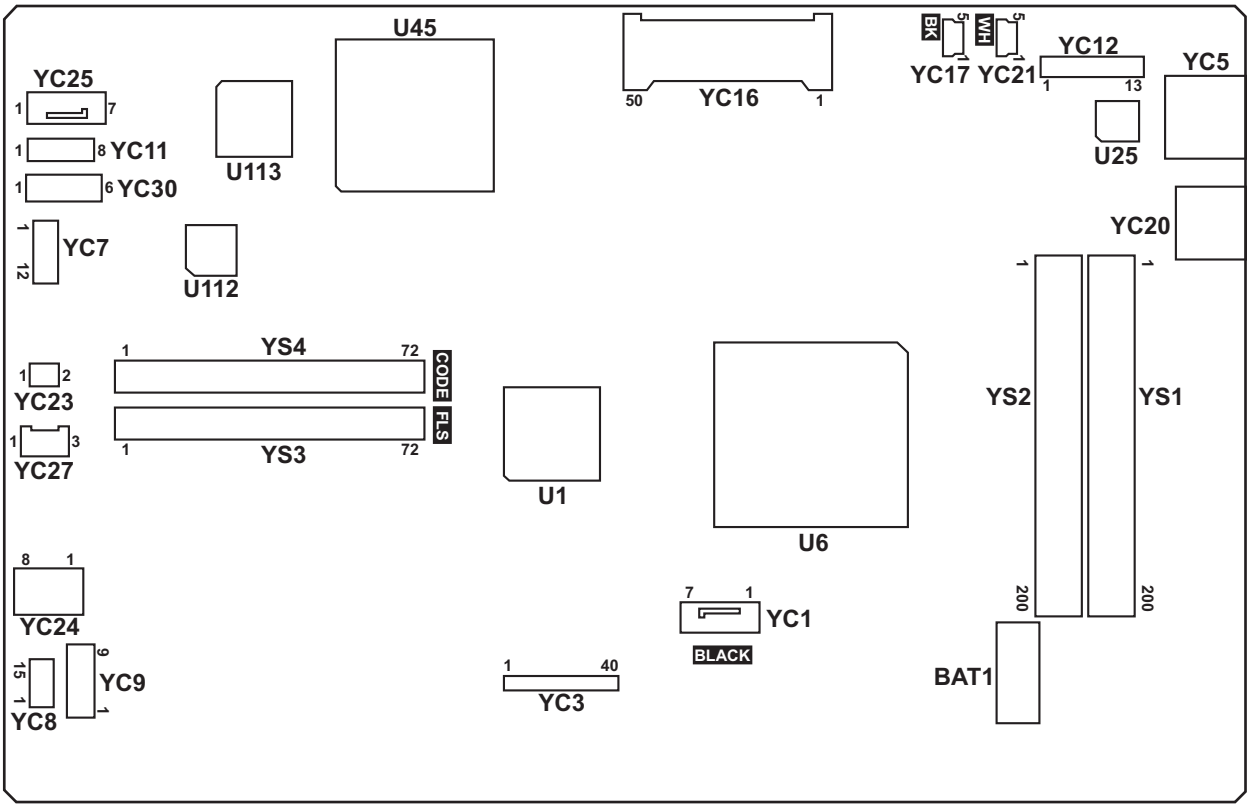

Figure 2-3-1 Main PWB silk-screen diagram

Connector	Pin	Signal	I/O	Voltage	Description
YC1	1	GND	-	-	Ground
Connected to hard disk.	2	TXP	O	-	HDD data signal
	3	TXN	O	-	HDD data signal
	4	GND	-	-	Ground
	5	RXN	I	-	HDD data signal
	6	RXP	I	-	HDD data signal
	7	GND	-	-	Ground
YC3	1	GND	-	-	Ground
Connected to video PWB.	2	EGSCLK	O	0/3.3 V DC(pulse)	Engine clock sijgnal
	3	EGSI	O	0/3.3 V DC(pulse)	serial communication data signal
	4	EGSDIR	O	0/3.3 V DC	Engine communication direction signal
	5	EGSBSY	O	0/3.3 V DC	Engine busy signal
	6	EGSO	I	0/3.3 V DC(pulse)	serial communication data signal
	7	EGSIRN	O	0/3.3 V DC	Engine interrupt sijgnal
	8	GND	-	-	Ground
	9	GND	-	-	Ground
	10	HOLD_ENG	O	0/3.3 V DC	Engine hold signal
	11	SLEEP	O	0/3.3 V DC	Sleep signal
	12	HSYNCD_P	O	0/3.3 V DC(pulse)	Image control signal
	13	HSYNCD_N	O	0/3.3 V DC(pulse)	Image control signal
	14	HSYNCC_P	O	0/3.3 V DC(pulse)	Image control signal
	15	HSYNCC_N	O	0/3.3 V DC(pulse)	Image control signal
	16	HSYNCB_P	O	0/3.3 V DC(pulse)	Image control signal
	17	HSYNCB_N	O	0/3.3 V DC(pulse)	Image control signal
	18	HSYNCA_P	O	0/3.3 V DC(pulse)	Image control signal
	19	HSYNCA_N	O	0/3.3 V DC(pulse)	Image control signal
	20	VSYNCD_P	O	0/3.3 V DC(pulse)	Image control signal
	21	VSYNCD_N	O	0/3.3 V DC(pulse)	Image control signal
	22	VSYNCC_P	O	0/3.3 V DC(pulse)	Image control signal
	23	VSYNCC_N	O	0/3.3 V DC(pulse)	Image control signal
	24	VSYNCB_P	O	0/3.3 V DC(pulse)	Image control signal
	25	VSYNCB_N	O	0/3.3 V DC(pulse)	Image control signal
	26	VSYNCA_P	O	0/3.3 V DC(pulse)	Image control signal
	27	VSYNCA_N	O	0/3.3 V DC(pulse)	Image control signal
	28	GND	-	-	Ground
	29	TCLKP	O	0/3.3 V DC(pulse)	Clock signal
	30	TCLKN	O	0/3.3 V DC(pulse)	Clock signal

Connector	Pin	Signal	I/O	Voltage	Description
YC3	31	GND	-	-	Ground
Connected to video PWB.	32	TCP	O	0/3.3 V DC(pulse)	Image control signal
	33	TCN	O	0/3.3 V DC(pulse)	Image control signal
	34	GND	-	-	Ground
	35	TBP	O	0/3.3 V DC(pulse)	Image control signal
	36	TBN	O	0/3.3 V DC(pulse)	Image control signal
	37	GND	-	-	Ground
	38	TAP	O	0/3.3 V DC(pulse)	Image control signal
	39	TAN	O	0/3.3 V DC(pulse)	Image control signal
	40	GND	-	-	Ground
YC5	1	TD1+	O	0/3.3 V DC(pulse)	Transmission data
Connected to ethernet	2	TD1-	O	0/3.3 V DC(pulse)	Transmission data
	3	TD2+	O	0/3.3 V DC(pulse)	Transmission data
	4	TD2-	O	0/3.3 V DC(pulse)	Transmission data
	5	CT1	O	3.3 V DC	3.3 V DC power output
	6	CT2	O	3.3 V DC	3.3 V DC power output
	7	TD3+	O	0/3.3 V DC(pulse)	Transmission data
	8	TD3-	O	0/3.3 V DC(pulse)	Transmission data
	9	TD4+	O	0/3.3 V DC(pulse)	Transmission data
	10	TD4-	O	0/3.3 V DC(pulse)	Transmission data
	11	GRLED_A1	O	0/3.3 V DC	LED emitter signal
	12	GRLED_K1	O	0/3.3 V DC	LED emitter signal
	13	YWLED_A2	O	0/3.3 V DC	LED emitter signal
	14	YWLED_K2	O	0/3.3 V DC	LED emitter signal
YC7	1	KMDET	I	0/3.3 V DC	KMAS set signal
Connected to KMAS	2	NC	-	-	Not used
	3	KMDREQ	I	0/3.3 V DC	KMAS control signal
	4	KMACK	O	0/3.3 V DC	KMAS control signal
	5	KMRXD	O	0/3.3 V DC(pulse)	KMAS received data signal
	6	SGND	-	-	Ground
	7	KMTXD	I	0/3.3 V DC(pulse)	KMAS transmission data signal
	8	SGND	-	-	Ground
	9	SGND	-	-	Ground
	10	SGND	-	-	Ground
	11	+5V	O	5 V DC	5 V DC power to KMAS
	12	+5V	O	5 V DC	5 V DC power to KMAS

Connector	Pin	Signal	I/O	Voltage	Description
YC8	1	RESET	I	0/3.3 V DC	Reset signa
Connected to Video PWB.	2	WAKEUP0	O	0/3.3 V DC	Control signal
	3	AUDIO0	I	Analog	Audio signal
	4	GND	-	-	Ground
	5	USB_DP0	I/O	-	USB data signal
	6	USB_DN0	I/O	-	USB data signal
	7	VBUS0	O	3.3 V DC	3.3 V DC power output to VPWB
	8	GND	-	-	Ground
	9	RESET1	I	0/3.3 V DC	Reset signal
	10	WAKEUP1	O	0/3.3 V DC	Control signal
	11	AUDIO1	I	Analog	Audio signal
	12	GND	-	-	Ground
	13	USB_DP1	I/O	-	USB data signal
	14	USB_DN1	I/O	-	USB data signal
	15	VBUS1	O	3.3 V DC	3.3 V DC power output to VPWB
YC9	1	GND	-	-	Ground
Connected to Video PWB	2	5V_CUT0	I	0/3.3 V DC	5 V DC cut signal
	3	GND	-	-	Ground
	4	5V	O	5 V DC	5 V DC power output to VPWB
	5	GND	-	-	Ground
	6	5V_CUT1	I	0/3.3 V DC	5 V DC cut signal
YC11	1	GND	-	-	Ground
Connected to ISC PWB	2	SC_IRN	O	0/3.3 V DC	Scanner interrupt signal
	3	SC_DIR	O	0/3.3 V DC	Scanner communication direction signal
	4	SC_HLDN	O	0/3.3 V DC	Scanner hold signal
	5	SC_BSY	O	0/3.3 V DC	Scanner busy signal
	6	SC_SI	O	0/3.3 V DC(pulse)	Serial communication data signal
	7	SC_SO	I	0/3.3 V DC(pulse)	Serial communication data signal
	8	SC_CLK	O	0/3.3 V DC(pulse)	Scanner clock signal

Connector	Pin	Signal	I/O	Voltage	Description
YC12	1	DEEP_POWERON	O	0/3.3 V DC	Sleep return signal
Connected to operation panel PWB main	2	ENERGY_SAVE	O	0/3.3 V DC	Energy save signal
	3	SUPND_POWER	O	DC3.3V	3.3 V DC power output to OPPWB-M
	4	LED_MEMORY_N	O	0/3.3 V DC	Memory LED control signal
	5	LED_ATTENTION_N	O	0/3.3 V DC	Attention LED control signal
	6	LED_PROCESSING_N	O	0/3.3 V DC	Processing LED control signal
	7	SHUT_DOWN	O	0/3.3 V DC	24 V down signal
	8	LIGHTOFF_POWERON	O	0/3.3 V DC	Sleep return signal
	9	AUDIO	O	Analog	Audio output signal
	10	PANEL RESET	O	0/3.3 V DC	Reset signal
	11	INT_POWER KEY_N	I	0/3.3 V DC	Power key: On/Off
	12	PANEL_STATUS	I	0/3.3 V DC	Operation panel status signal
	13	GND	-	-	Ground
YC16	1	GND	-	-	Ground
Connected to CF card	2	D3	I/O	0/3.3 V DC(pulse)	Data bus signal
	3	D4	I/O	0/3.3 V DC(pulse)	Data bus signal
	4	D5	I/O	0/3.3 V DC(pulse)	Data bus signal
	5	D6	I/O	0/3.3 V DC(pulse)	Data bus signal
	6	D7	I/O	0/3.3 V DC(pulse)	Data bus signal
	7	/CE1	O	0/3.3 V DC	Control signal
	8	A10	O	0/3.3 V DC(pulse)	Address bus signal
	9	/OE	O	0/3.3 V DC	Control signal
	10	A9	O	0/3.3 V DC(pulse)	Address bus signal
	11	A8	O	0/3.3 V DC(pulse)	Address bus signal
	12	A7	O	0/3.3 V DC(pulse)	Address bus signal
	13	VCC	O	0/3.3 V DC	Control signal
	14	A6	O	0/3.3 V DC(pulse)	Address bus signal
	15	A5	O	0/3.3 V DC(pulse)	Address bus signal
	16	A4	O	0/3.3 V DC(pulse)	Address bus signal

Connector	Pin	Signal	I/O	Voltage	Description
YC16	17	A3	O	0/3.3 V DC(pulse)	Address bus signal
Connected to CF card	18	A2	O	0/3.3 V DC(pulse)	Address bus signal
	19	A1	O	0/3.3 V DC(pulse)	Address bus signal
	20	A0	O	0/3.3 V DC(pulse)	Address bus signal
	21	D0	I/O	0/3.3 V DC(pulse)	Data bus signal
	22	D1	I/O	0/3.3 V DC(pulse)	Data bus signal
	23	D2	I/O	0/3.3 V DC(pulse)	Data bus signal
	24	WP	O	0/3.3 V DC	Control signal
	25	/CD2	O	0/3.3 V DC	Control signal
	26	/CD1	O	0/3.3 V DC	Control signal
	27	D11	I/O	0/3.3 V DC(pulse)	Data bus signal
	28	D12	I/O	0/3.3 V DC(pulse)	Data bus signal
	29	D13	I/O	0/3.3 V DC(pulse)	Data bus signal
	30	D14	I/O	0/3.3 V DC(pulse)	Data bus signal
	31	D15	I/O	0/3.3 V DC(pulse)	Data bus signal
	32	/CE2	O	0/3.3 V DC	Control signal
	33	/VS1	O	0/3.3 V DC	Control signal
	34	/IORD	O	0/3.3 V DC	Control signal
	35	/IOWD	O	0/3.3 V DC	Control signal
	36	/WE	O	0/3.3 V DC	Control signal
	37	RDY /BSY	I	0/3.3 V DC	Control signal
	38	VCC	O	0/3.3 V DC	Control signal
	39	/CSEL	O	0/3.3 V DC	Control signal
	40	/VS2	O	0/3.3 V DC	Control signal
	41	RESET	I	0/3.3 V DC	Reset signal
	42	/WAIT	O	0/3.3 V DC	Control signal
	43	/INPACK	O	0/3.3 V DC	Control signal
	44	/REG	I	0/3.3 V DC	REG signal
	45	BVD2	O	0/3.3 V DC	Control signal
	46	BVD1	O	0/3.3 V DC	Control signal
	47	D8	I/O	0/3.3 V DC(pulse)	Data bus signal
	48	D9	I/O	0/3.3 V DC(pulse)	Data bus signal
	49	D10	I/O	0/3.3 V DC(pulse)	Data bus signal
	50	GND	-	-	Ground

Connector	Pin	Signal	I/O	Voltage	Description
YC17	1	VBUS	O	5 V DC	5 V DC power output
Connected to operation panel PWB main	2	DATA -	I/O	-	USB data signal
	3	DATA +	I/O	-	USB data signal
	4	NC	-	-	Not used
	5	GND	-	-	Ground
YC20	D1	VBUS_D	O	5 V DC	5 V DC power output
Connected to USB	D2	D-_D	I/O	-	USB data signal
	D3	D+_D	I/O	-	USB data signal
	D4	GND_D	-	-	Ground
	H1	VBUS_H	O	5 V DC	5 V DC power output
	H2	D-_H	I/O	-	USB data signal
	H3	D+_H	I/O	-	USB data signal
	H4	GND_H	-	-	Ground
YC21	1	VBUS	O	5 V DC	5 V DC power output
Connected to USB host	2	DATA-	I/O	-	USB data signal
	3	DATA+	I/O	-	USB data signal
	4	ID	-	-	Not used
	5	GND	-	-	Ground
YC23	1	SC	O	5 V DC	CONFM: On/Off
Connected to controller fan motor	2	GND	-	-	Ground
	3	5V	O	5 V DC	5 V DC power output
YC24	1	12V0	O	12 V DC	12 V DC power input from VPWB
Connected to video PWB	2	12V0	O	12 V DC	12 V DC power input from VPWB
	3	12V0	O	12 V DC	12 V DC power input from VPWB
	4	12V0(N.C)	-	-	Not used
	5	GND	-	-	Ground
	6	GND	-	-	Ground
	7	GND	-	-	Ground
	8	GND(N.C)	-	-	Not used
YC25	1	GND	-	-	Ground
Connected to ISC PWB	2	HTPDN	I	0/3.3 V DC	Control signal
	3	LOCKN	I	0/3.3 V DC	Lock signal
	4	GND	-	-	Ground
	5	RX0N	I	0/3.3 V DC(pulse)	Received data signal
	6	RX0P	I	0/3.3 V DC(pulse)	Received data signal
	7	GND	-	-	Ground

Connector	Pin	Signal	I/O	Voltage	Description
YC27	1	GND	-	-	Ground
Connected to hard disk	2	+5V_HDD	O	5 V DC	5 V DC power output to HDD
	3	GND	-	-	Ground
YC30	1	+5V	O	5 V DC	5 V DC power input from OPPWB-M
Connected to operation panel PWB main	2	+5V	O	5 V DC	5 V DC power input from OPPWB-M
	3	+5V	O	5 V DC	5 V DC power input from OPPWB-M
	4	GND	-	-	Ground
	5	GND	-	-	Ground
	6	GND	-	-	Ground

2-3-2 Engine PWB

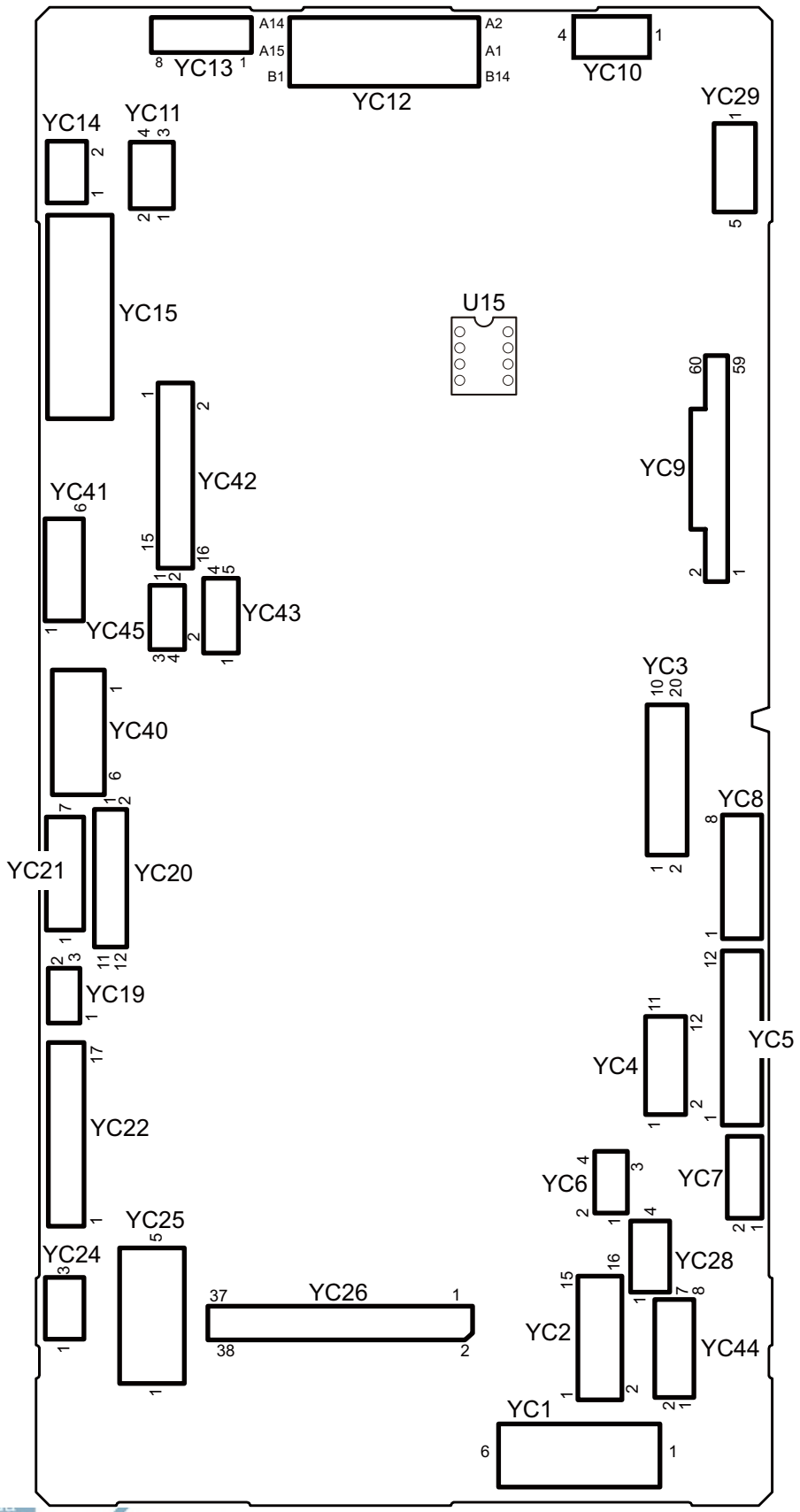

Figure 2-3-2 Engine PWB silk-screen diagram

Connector	Pin	Signal	I/O	Voltage	Description
YC1	1	GND	-	-	GROUND
Connected to power source PWB	2	GND	-	-	GROUND
	3	GND	-	-	GROUND
	4	24V4	I	24 V DC	24 V DC power input from PSPWB
	5	24V4	I	24 V DC	24 V DC power input from PSPWB
	6	24V4	I	24 V DC	24 V DC power input from PSPWB
YC2	1	24V4	O	24 V DC	24 V DC power output to MPSOL
Connected to MP solenoid, duplex clutch, registration clutch, mid clutch 1, paper feed clutch 1, conveying motor 1	2	MPF_SOL_REM	O	0/24 V DC	MPSOL: On/Off
	3	DU_CL_REM	O	0/24 V DC	DUCL: On/Off
	4	24V4	O	24 V DC	24 V DC power output to DUCL
	5	REG_CL_REM	O	0/24 V DC	RCL: On/Off
	6	24V4	O	24 V DC	24 V DC power output to RCL
	7	MID_CL_REM	O	0/24 V DC	MCL1: On/Off
	8	24V4	O	24 V DC	24 V DC power output to MCL1
	9	CAS_CL_REM	O	0/24 V DC	PFCL1: On/Off
	10	24V4	O	24 V DC	24 V DC power output to PFCL1
	11	FEED_MT_DIR	O	0/5 V DC	CM1 drive shift signal
	12	FEED_MT_RDY	I	0/3.3 V DC	CM1 ready signal
	13	FEED_MT_CLK	O	0/5 V DC (pulse)	CM1 clock signal
	14	FEED_MT_REM	O	0/5 V DC	CM1: On/Off
	15	GND	-	-	GROUND
	16	24VIL	O	24 V DC	24 V DC power output to CM1

Connector	Pin	Signal	I/O	Voltage	Description
YC3	1	DLPC_MT_DIR	O	0/5V DC	DEVM-YCM drive shift signal
Connected to developer motor YCM, developer stop clutch, drum motor YCM, drum motor K	2	DLPC_MT_RDY	I	0/3.3 V DC	DEVM-YCM ready signal
	3	DLPC_MT_CLK	O	0/5 V DC (pulse)	DEVM-YCM clock signal
	4	DLPC_MT_REM	O	0/5 V DC	DEVM-YCM: On/Off
	5	GND	-	-	GROUND
	6	24V4	O	24 V DC	24 V DC power output to DEVM-YCM
	7	24V4	O	24 V DC	24 V DC power output to DEVSCL
	8	DLP_CL_REM	O	0/3.3 V DC	DEVSCL: On/Off
	9	DRMC_MT_DIR	O	0/5 V DC	DRM-YCM drive shift signal
	10	DRMC_MT_RDY	I	0/3.3 V DC	DRM-YCM ready signal
	11	DRMC_MT_CLK	O	0/5 V DC (pulse)	DRM-YCM clock signal
	12	DRMC_MT_REM	O	0/5 V DC	DRM-YCM: On/Off
	13	GND	-	-	GROUND
	14	24VIL	O	24 V DC	24 V DC power output to DRM-YCM
	15	DRMK_MT_DIR	O	0/5 V DC	DRM-K drive shift signal
	16	DRMK_MT_RDY	I	0/3.3 V DC	DRM-K ready signal
	17	DRMK_MT_CLK	O	0/5 V DC (pulse)	DRM-K clock signal
	18	DRMK_MT_REM	O	0/5 V DC	DRM-K: On/Off
	19	GND	-	-	GROUND
	20	24VIL	O	24 V DC	24 V DC power output to DRM-K

Connector	Pin	Signal	I/O	Voltage	Description
YC4	1	DLPK_MT_DIR	O	0/5 V DC	DEVM-K drive shift signal
Connected to developer motor K, fuser motor	2	DLPK_MT_RDY	I	0/3.3 V DC	DEVM-K ready signal
	3	DLPK_MT_CLK	O	0/5 V DC (pulse)	DEVM-K clock signal
	4	DLPK_MT_REM	O	0/5 V DC	DEVM-K: On/Off
	5	GND	-	-	GROUND
	6	24VIL	O	24 V DC	24 V DC power output to DEVM-K
	7	FUSER_MT_DIR	O	0/5 V DC	FUM drive shift signal
	8	FUSER_MT_RDY	I	0/3.3 V DC	FUM ready signal
	9	FUSER_MT_CLK	O	0/5 V DC (pulse)	FUM clock signal
	10	FUSER_MT_REM	O	0/5 V DC	FUM: On/Off
	11	GND	-	-	GROUND
	12	24VIL	O	24 V DC	24 V DC power output to FUM
YC5	1	3.3V4	O	3.3 V DC	3.3 V DC power output to DUS
Connected to duplex sensor, MP paper sensor, eject paper sensor, feed sensor1	2	GND	-	-	GROUND
	3	DUSW	I	0/3.3 V DC	DUS: On/Off
	4	GND	-	-	GROUND
	5	ROOP	-	-	FUPS: On/Off
	6	5V4	-	5 V DC	5 V DC power output to FUPS
	7	3.3V0	O	3.3 V DC	3.3 V DC power output to MPPS
	8	GND	-	-	GROUND
	9	MPF_SENSE	I	0/3.3 V DC	MPPS: On/Off
	10	3.3V4	O	3.3 V DC	3.3 V DC power output to FS1
	11	GND	-	-	GROUND
	12	FEEDSW	I	0/3.3 V DC	FS1: On/Off
YC6	1	SUB_SCL	O	3.3 V DC	Clock signal
Connected to sub PWB	2	SUB_SDA	I/O	3.3 V DC	Data signal
	3	GND	-	-	GROUND
	4	3.3V4	O	3.3 V DC	3.3 V DC power output to SUBPWB

Connector	Pin	Signal	I/O	Voltage	Description
YC7	1	RXD	I	3.3 V DC	Data input
Connected to IH PWB	2	TXD	O	3.3 V DC	Data output
	3	ROTATION	O	3.3 V DC	Rotation detection
	4	IH_REM	O	3.3 V DC	Heater remote
	5	3.3V4	O	3.3 V DC	3.3 V DC power output to IHPWB
	6	GND	-	-	GROUND
YC8	1	24V4	O	24 V DC	24 V DC power output to TM-Y
Connected to toner motor Y/C/M/K	2	TNMYDRN	O	0/24 V DC	TM-Y: On/Off
	3	24V4	O	24 V DC	24 V DC power output to TM-C
	4	TNMCDRN	O	0/24 V DC	TM-C: On/Off
	5	24V4	O	24 V DC	24 V DC power output to TM-M
	6	TNMMDRN	O	0/24 V DC	TM-M: On/Off
	7	24V4	O	24 V DC	24 V DC power output to TM-K
	8	TNMKDRN	O	0/24 V DC	TM-K: On/Off
YC9	1	GND	-	-	GROUND
Connected to engine con-nect PWB	2	GND	-	-	GROUND
	3	GND	-	-	GROUND
	4	ID2S	I	Analog	IDS2 detection signal
	5	ID2P	I	Analog	IDS2 detection signal
	6	ID1S	I	Analog	IDS1 detection signal
	7	ID1P	I	Analog	IDS1 detection signal
	8	LEDREF2	O	Analog	IDS2 control signal
	9	LEDREF1	O	Analog	IDS1 control signal
	10	RESIST	I	0/3.3 V DC	RS: On/Off
	11	NC	-	-	Not used
	12	PAPWSIZE1	I	0/3.3 V DC	PWSW1: On/Off
	13	PAPLSIZE1	I	0/3.3 V DC	PLSW1: On/Off
	14	PAPLSIZE2	I	0/3.3 V DC	PLSW1: On/Off
	15	PAPLSIZE3	I	0/3.3 V DC	PLSW1: On/Off
	16	LMOTOCP	I	0/3.3 V DC	LM1 detection signal
	17	LMOTRE	O	0/3.3 V DC	LM1: On/Off
	18	PAPEMP2	I	0/3.3 V DC	PS2: On/Off
	19	PAPEMP1	I	0/3.3 V DC	PS1: On/Off
	20	LIFTFULL	I	0/3.3 V DC	LS1: On/Off
	21	FANBHALF	O	0/3.3 V DC	CM1 drive shift signal
	22	FANBFULL	O	0/3.3 V DC	CM1: On/Off

Connector	Pin	Signal	I/O	Voltage	Description
YC9	23	LIGHTSLEEPN	O	0/3.3 V DC	Sleep signal: On/Off
Connected to engine connect PWB	24	PFPAUSE	O	0/3.3 V DC	Paper feeder control signal
	25	PFSET	O	0/3.3 V DC	Paper feeder sleep return signal
	26	DFSET	O	0/3.3 V DC	Finisher set signal
	27	DFSEL	O	0/3.3 V DC	Finisher selection signal
	28	BRSEL	O	0/3.3 V DC	Bridge selection signal
	29	PFSEL	O	0/3.3 V DC	Paper feed selection signal
	30	EHRDY	I	0/3.3 V DC	Ready signal
	31	EHSO	O	0/3.3 V DC (pulse)	Serial communication data signal
	32	EHSI	I	0/3.3 V DC (pulse)	Serial communication data signal
	33	EHCLK	O	0/3.3 V DC (pulse)	Clock signal
	34	FANCHALF	O	0/3.3 V DC	FM2 drive shift signal
	35	FANCFULL	O	0/3.3 V DC	FM2: On/Off
	36	NC	-	-	Not used
	37	ERASER_REM(K)	O	0/3.3 V DC	CL-K: On/Off
	38	DLP_TH	I	Analog	DEVTH detection voltege
	39	TCSENSE(K)	I	0/3.3 V DC	TS-K: On/Off
	40	TCSENSE(M)	I	0/3.3 V DC	TS-M: On/Off
	41	TCSENSE(C)	I	0/3.3 V DC	TS-C: On/Off
	42	ERASER_REM(COL)	O	0/3.3 V DC	CL-YCM: On/Off
	43	TCSENSE(Y)	I	0/3.3 V DC	TS-Y: On/Off
	44	GND	-	-	GROUND
	45	SDAC	I/O	0/3.3 V DC	Data
	46	GND	-	-	GROUND
	47	SCLC	O	0/3.3 V DC	Clock signal
	48	GND	-	-	GROUND
	49	SDAA	I/O	0/3.3 V DC	Data
	50	GND	-	-	GROUND
	51	SCLA	O	0/3.3 V DC	Clock signal
	52	GND	-	-	GROUND
	53	BLTHP2	I	0/3.3 V DC	BDS2: On/Off
	54	BLTHP1	I	0/3.3 V DC	BDS1: On/Off
	55	WTCFULLIN	I	Analog	WTDS detection voltage

Connector	Pin	Signal	I/O	Voltage	Description
YC9	56	WTCFULLOUT	O	0/3.3 V DC	WTDS: On/Off
Connected to engine connect PWB	57	IDCLHP	I	0/3.3 V DC	IDS: On/Off
	58	3.3V0	O	3.3 V DC	3.3 V DC power output to ECPWB
	59	3.3V4	O	3.3 V DC	3.3 V DC power output to ECPWB
	60	3.3V4	O	3.3 V DC	3.3 V DC power output to ECPWB
YC10	1	IDMOTA	O	24 V DC	IDSM: On/Off
Connected to engine connect PWB	2	IDMOTB	O	24 V DC	IDSM: On/Off
	3	BLTREMA	O	24 V DC	TCBM: On/Off
	4	BLTREMB	O	24 V DC	TCBM: On/Off
YC11	1	3.3V4	O	3.3 V DC	3.3 V DC power output to RFPWB
Connected to RFID PWB	2	RFID_SCL	O	0/3.3 V DC (pulse)	RFPWB EEPROM clock signal
	3	RFID_SDA	I/O	0/3.3 V DC (pulse)	RFPWB EEPROM data signal
	4	GND	-	-	GROUND
YC12	B1	LSUMOTB	O	0/24 V DC	LSUCM: Forward/Stop (Forward)
Connected to LSU connect PWB	B2	LSUMOTA	O	0/24 V DC	LSUCM: Forward/Stop (Reverse)
	B3	MP(K)_REM	O	0/3.3 V DC	PM: On/Off
	B4	24V4	O	24 V DC	24 V DC power output to PM
	B5	MP(K)_RDY	I	0/3.3 V DC	PM ready signal
	B6	MP(M)_REM	O	0/3.3 V DC	PM: On/Off
	B7	MP(C)_REM	O	0/3.3 V DC	PM: On/Off
	B8	MP(C)_RDY	I	0/3.3 V DC	PM ready signal
	B9	VCONT(K)	O	Analog	APCPWB laser power standard voltage
	B10	MP(Y)_RDY	I	0/3.3 V DC	PM ready signal
	B11	VCONT(M)	O	Analog	APCPWB laser power standard voltage
	B12	LSU_TH(Y)	I	Analog	LSU thermistor signal
	B13	VCONT(Y)	O	Analog	APCPWB laser power standard voltage
	B14	GND	-	-	GROUND
	B15	VCONT(C)	O	Analog	APCPWB laser power standard voltage
	A1	3.3VIL	O	3.3 V DC	3.3 V DC power output to BDPWB
	A2	GND	-	-	GROUND
	A3	LSU_TH(K)	I	Analog	LSU thermistor signal
	A4	EN(K)	O	0/3.3 V DC	APCPWB laser enable signal
	A5	EN?COL)	O	0/3.3 V DC	APCPWB laser enable signal
	A6	MP(Y)_CLK	O	0/3.3 V DC (pulse)	PM clock signal
	A7	MP(Y)_REM	O	0/3.3 V DC	PM: On/Off

Connector	Pin	Signal	I/O	Voltage	Description
YC12	A8	MP(C)_CLK	O	0/3.3 V DC (pulse)	PM clock signal
Connected to LSU connect PWB	A9	MP(M)_RDY	I	0/3.3 V DC	PM ready signal
	A10	MP(M)_CLK	O	0/3.3 V DC (pulse)	PM clock signal
	A11	MP(K)_CLK	O	0/3.3 V DC (pulse)	PM clock signal
	A12	GND	-	-	GROUND
	A13	24V4	O	24 V DC	24 V DC power output to PM
	A14	GND	-	-	GROUND
	A15	24V4	O	24 V DC	24 V DC power output to PM
YC13	1	GND	-	-	GROUND
Connected to high voltage PWB sub	2	T1KCNT	O	Analog	Primary transfer bias control voltage (Black)
	3	T1CCNT	O	Analog	Primary transfer bias control voltage (Magenta)
	4	CLCNT	O	Analog	Cleaning bias control signal
	5	HVREM	O	0/10 to 24 V DC (pulse)	Transfer bias remote signal
	6	T1YCNT	O	Analog	Primary transfer bias control voltage (Yellow)
	7	T1MCNT	O	Analog	Primary transfer bias control voltage (Cyan)
	8	24VIL	O	24 V DC	24 V DC power output to HVPWB-S
YC14	1	BRSET	I	0/3.3 V DC	BRDSW: On/Off
Connected to bridge detection switch	2	GND	-	-	GROUND
YC15	B1	GND	-	-	GROUND
Connected to high voltage PWB	B2	GND	-	-	GROUND
	B3	SCNT	O	Analog	Separation control signal
	B4	T2CNT	O	Analog	Secondary transfer bias control voltage
	B5	MISENS	I	Analog	Chager roller AC current signal
	B6	HVREM	O	0/10 to 24 V DC (pulse)	Developer bias remote signal
	B7	BKSCNT	O	Analog	Developer sleeve roller bias control voltage (Black)
	B8	BMMCNT	O	Analog	Developer magnet roller bias control voltage (Magenta)
	B9	BKMCNT	O	Analog	Developer magnet roller bias control voltage (Black)
	B10	BMSCNT	O	Analog	Developer sleeve roller bias control voltage (Magenta)

Connector	Pin	Signal	I/O	Voltage	Description
YC15	B11	MKCNT	O	Analog	Chager roller control voltage (Black)
Connected to high voltage PWB	B12	MMCNT	O	Analog	Chager roller control voltage (Magenta)
	B13	BKBACCNT	O	Analog	Developing AC bias control voltage (Black)
	B14	HVCLKK	O	0/10 V DC (pulse)	Developer bias clock signal (Black)
	B15	HVCLKM	O	0/10 V DC (pulse)	Developer bias clock signal (Magenta)
	B16	24VIL	O	24 V DC	24 V DC power output to HVPWB
	B17	24VIL	O	24 V DC	24 V DC power output to HVPWB
	A1	CBACCNT	O	Analog	Developer AC bias control voltage (Cyan)
	A2	MBACCNT	O	Analog	Developer AC bias control voltage (Magenta)
	A3	MCCNT	O	Analog	Chager roller control voltage (Cyan)
	A4	HVCLKC	O	0/10 V DC (pulse)	Developer bias clock signal (Cyan)
	A5	BCSCNT	O	Analog	Developer sleeve roller bias control voltage (Cyan)
	A6	BYMCNT	O	Analog	Developer magnet roller bias control voltage (Yellow)
	A7	BCMCNT	O	Analog	Developer magnet roller bias control voltage (Cyan)
	A8	BYSCNT	O	Analog	Developer sleeve roller bias control voltage (Yellow)
	A9	MYCNT	O	Analog	Chager roller control voltage (Yellow)
	A10	YBACCNT	O	Analog	Developer AC bias control voltage (Yellow)
	A11	HVCLKY	O	0/10 V DC (pluse)	Developer bias clock signal (Yellow)
YC19	1	GND	-	-	GROUND
Connected to IH PWB	2	RELAY	O	3.3 V DC	Relay remote
	3	24V4	O	24 V DC	24 V DC power output to IHPWB

Connector	Pin	Signal	I/O	Voltage	Description
YC20	1	EJE_SOL_RETURN	O	0/24 V DC	FSSOL: On/Off
Connected to shift solenoid, eject motor, paper full sensor, job paper full sensor, job eject paper sensor	2	24V4	O	24 V DC	24 V DC power output to FSSOL
	3	EJECT_/B	O	0/24 V DC (pluse)	EM drive control signal
	4	EJECT_/A	O	0/24 V DC (pluse)	EM drive control signal
	5	EJECT_B	O	0/24 V DC (pluse)	EM drive control signal
	6	EJECT_A	O	0/24 V DC (pluse)	EM drive control signal
	7	3.3V4	O	3.3 V DC	3.3 V DC power output to PFS
	8	GND	-	-	GROUND
	9	EJE_FULL_UP	I	0/3.3 V DC	PFS: On/Off
	10	3.3V4	O	3.3 V DC	3.3 V DC power output to JEPS
	11	GND	-	-	GROUND
	12	EJE_FULL_DWN	I	0/3.3 V DC	JEPS: On/Off
YC21	1	24V4	O	24 V DC	24 V DC power output to CFM
Connected to container fan motor, developer fan motor and eject fan motor	2	IH_FAN2_REM	O	0/24 V DC	CFM: On/Off
	3	IH_FAN2_ALM	I	0/3.3 V DC	CFM alarm signal
	4	24VIL	O	24 V DC	24 V DC power output to DEVFM
	5	DLP_FAN_REM	O	0/24 V DC	DEVFM: On/Off
	6	24V4	O	24 V DC	24 V DC power output to EFM
	7	CON_FAN_REM	O	0/24 V DC	EFM: On/Off
YC22	1	FUSREMA	O	0/24 V DC	PRM: On/Off
Connected to thermistor1, thermistor2, eject sensor, fuser press release motor	2	FUSREMB	O	24 V DC	24 V DC power output to PRM
	3	3.3V4	O	3.3 V DC	3.3 V DC power output to ES
	4	GND	-	-	GROUND
	5	FUSER_JAM	I	0/3.3 V DC	ES: On/Off
	6	3.3V4	-	-	Not used
	7	GND	-	-	Not used
	8	FUSER_PRE	-	-	Not used
	9	SUBSDA	I/O	3.3 V DC	Data
	10	SUBSCL	O	3.3 V DC	Clock
	11	PR_TH	I	Analog	FTH detection voltage (Press roller)
	12	HR_NCTH1	I	Analog	FTH detection voltage (Center)
	13	HR_NCTH2	I	Analog	FTH detection voltage (Center)

Connector	Pin	Signal	I/O	Voltage	Description
YC22	14	3.3V4	O	3.3 V DC	3.3 V DC power output to FTH
Connected to thermistor1, thermistor2, eject sensor, fuser press release motor	15	EG_TH	I	Analog	FTH detection voltage (Edge)
	16	GND	-	-	GROUND
	17	ROTATION	I	3.3 V DC	Rotation detection
YC24	1	24V4	O	24 V DC	24 V DC power output to IHFM
Connected to IH fan motor	2	IH_FAN1_REM	O	0/24 V DC	IHFM: On/Off
	3	IH_FAN1_ALM	I	0/3.3 V DC	IHFM alarm signal
YC25	1	24VIL2	I	24 V DC	24 V DC power input from RCSW1
Connected to right cover switch 1, front cover switch	2	24VIL1	O	24 V DC	24 V DC power output to RCSW1
	3	24VIL1	O	24 V DC	24 V DC power output to FCSW
	4	24V4	I	24 V DC	24 V DC power input from FCSW
	5	3.3V0	O	3.3 V DC	3.3 V DC power output to FCSW
YC26	1	BDN_E(Y)	O	0/3.3 V DC (pulse)	Horizontal synchronizing signal (Yellow)
Connected to video PWB	2	BDN_E(C)	O	0/3.3 V DC (pulse)	Horizontal synchronizing signal (Cyan)
	3	BDN_E(M)	O	0/3.3 V DC (pulse)	Horizontal synchronizing signal (Magenta)
	4	BDN_E(K)	O	0/3.3 V DC (pulse)	Horizontal synchronizing signal (Black)
	5	NC	-	-	Not used
	6	ENG_IRN	O	0/3.3 V DC	Interruption signal
	7	ENG_DIR	O	0/3.3 V DC	Communication direction change signal
	8	ENG_BSY	O	0/3.3 V DC	Busy signal
	9	ENG_SO	I	0/3.3 V DC (pulse)	Serial communication data signal input
	10	ENG_SI	O	0/3.3 V DC (pulse)	Serial communication data signal output
	11	ENG_CLK	I	0/3.3 V DC (pulse)	Clock signal
	12	DC1_COUNT	O	0/3.3 V DC	Key counter count signal
	13	NC	-	-	Not used
	14	PVSYNC	O	0/3.3 V DC (pulse)	Vertical synchronizing signal
	15	MCV_EJ_COUNT	O	0/3.3 V DC	Coin vender control signal
	16	MCV_FED_COUNT	O	0/3.3 V DC	Coin vender control signal
	17	MCV_RXD	I	0/3.3 V DC (pulse)	MCV: On/Off
	18	MCV_TXD	O	0/3.3 V DC (pulse)	Serial communication data signal output

Connector	Pin	Signal	I/O	Voltage	Description
YC26	19	MCV_COPY_SIG	O	0/3.3 V DC	Coin vender control signal
Connected to video PWB	20	MCV_ENBL	I	0/3.3 V DC	Coin vender enable signal
	21	DEBUGRXD	O	0/3.3 V DC (pulse)	Serial communication data signal output
	22	DEBUGTXD	O	0/3.3 V DC (pulse)	Serial communication data signal output
	23	GND	-	-	GROUND
	24	GND	-	-	GROUND
	25	GND	-	-	GROUND
	26	GND	-	-	GROUND
	27	GND	-	-	GROUND
	28	NC	-	-	Not used
	29	3.3V4	O	3.3 V DC	3.3 V DC power output to VPWB
	30	3.3V4	O	3.3 V DC	3.3 V DC power output to VPWB
	31	3.3V0	O	3.3 V DC	3.3 V DC power output to VPWB
	32	5V4	O	5 V DC	5 V DC power output to VPWB
	33	NC	-	-	Not used
	34	NC	-	-	Not used
	35	Power_Off	I	0/3.3 V DC	Sleep signal
	36	MK2-ENBL	I	0/3.3 V DC	Key card enable signal
	37	ENG_HLD	I	0/3.3 V DC	Engine hold signal
	38	NC(SLEEPOFF)	-	-	Not used
YC28	1	24VIL	O	24 V DC	24 V DC power output to FUFM1
Connected to fuser fan motor 1,fuser fan motor 2	2	FUSER_FAN_REM	O	0/24 V DC	FUFM1: On/Off
	3	24VIL	O	24 V DC	24 V DC power output to FUFM2
	4	FUSER_FAN_REM	O	0/24 V DC	FUFM2: On/Off
YC29	1	GND	-	-	GROUND
Connected to temperature sensor	2	TMPDATA	I	Analog	TEMS detection voltage (Temperature)
	3	WETCLK0	O	0/3.3 V DC (pulse)	TEMS clock signal
	4	WETCLK1	O	0/3.3 V DC (pulse)	TEMS clock signal
	5	HUMDATA	I	Analog	TEMS detection voltage (Humidity)

Connector	Pin	Signal	I/O	Voltage	Description
YC40	1	24V4	O	24 V DC	24 V DC power output to ISU
Connected to image scan-ner unit	2	24V4	O	24 V DC	24 V DC power output to ISU
	3	GND	-	-	GROUND
	4	GND	-	-	GROUND
	5	GND	-	-	GROUND
	6	24V4	O	24 V DC	24 V DC power output to ISU
YC41	1	24VIL	O	24 V DC	24 V DC power output to VPWB
Connected to video PWB	2	GND	-	-	GROUND
	3	GND	-	-	GROUND
	4	GND	-	-	GROUND
	5	24V4	O	24 V DC	24 V DC power output to VPWB
	6	24V4	O	24 V DC	24 V DC power output to VPWB
YC42	1	FEED_MT2_REM	O	0/5 V DC	CM2: On/Off
Connected to video PWB	2	FEED_MT2_CLK	O	0/5 V DC (pulse)	CM clock signal
	3	FEED_MT2_RDY	I	0/3.3 V DC	CM ready signal
	4	MID2_CL_REM	O	0/24 V DC	MCL2: On/Off
	5	CAS2_CL_REM	O	0/24 V DC	PFCL2: On/Off
	6	LMOTOCP2	I	0/3.3 V DC	LM2 detection signal
	7	BO2_REM	O	0/3.3 V DC	LM2: On/Off
	8	PAPWSIZE2_1	I	0/3.3 V DC	PWSW2: On/Off
	9	PAPLSIZE2_1	I	0/3.3 V DC	PLSW2: On/Off
	10	PAPLSIZE2_2	I	0/3.3 V DC	PLSW2: On/Off
	11	PAPLSIZE2_3	I	0/3.3 V DC	PLSW2: On/Off
	12	RIGHT_COVER_SET	I	0/3.3 V DC	RCSW2: On/Off
	13	FEEDSW2	I	0/3.3 V DC	FS2: On/Off
	14	LIFTFULL2	I	0/3.3 V DC	LS2: On/Off
	15	PAPEMP4	I	0/3.3 V DC	PS4: On/Off
	16	PAPEMP3	I	0/3.3 V DC	PS3: On/Off

Connector	Pin	Signal	I/O	Voltage	Description
YC43	1	VIDEO_SEL	O	0/3.3 V DC (pulse)	Video select signal
Connected to video PWB	2	VIDEO_READY	I	0/3.3 V DC (pulse)	Video ready signal
	3	VIDEO_SCL	O	0/3.3 V DC (pulse)	Video clock signal
	4	VIDEO_RXD	O	0/3.3 V DC (pulse)	Video serial communication data signal
	5	VIDEO_TXD	O	0/3.3 V DC (pulse)	Video serial communication data signal
YC44	1	3.3V4	O	3.3 V DC	3.3 V DC power output to MPPWSW
Connected to MP tray detection switch, MP paper length switch, MP paper width switch	2	MPFWSIZE	I	0/3.3 V DC	MPPWSW: On/Off
	3	MPFLSIZE	I	0/3.3 V DC	MPPLSW: On/Off
	4	GND	-	-	GROUND
	5	3.3V4	O	3.3 V DC	3.3 V DC power output to MPPLSW
	6	MPF TRAY	I	0/3.3 V DC	MPTDSW: On/Off
	7	GND	-	-	GROUND
YC45	1	2nd Tray SW	I	0/3.3 V DC	JEPS: On/Off
Connected to job eject paper sensor, job LED	2	GND	-	-	GROUND
	3	2nd Tray LED	O	0/5 V DC	JLED: On/Off
	4	GND	-	-	GROUND

2-3-3 Video PWB

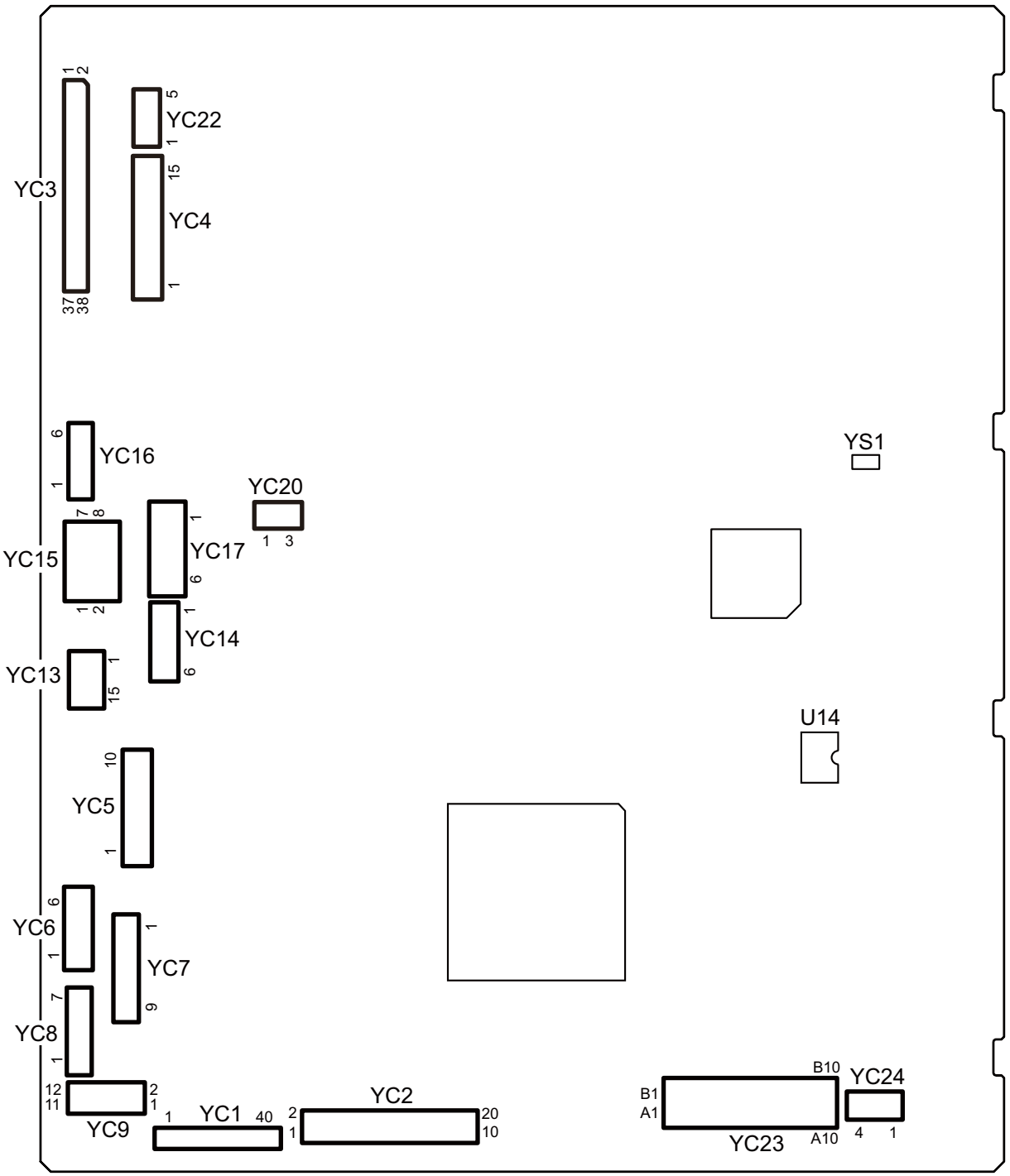

Figure 2-3-3 Video PWB silk-screen diagram

Connector	Pin	Signal	I/O	Voltage	Description
YC1	1	GND	-	-	Ground
Connected to main PWB	2	G6_EG_SCLK	I	0/3.3 V DC (pulse)	Engine clock signal
	3	G6_EG_S	I	0/3.3 V DC (pulse)	Serial communication data signal
	4	G6_EG_SDIR	I	3.3 V DC	Engine communication direction signal
	5	G6_EG_SBSY	I	3.3 V DC	Engine busy signal
	6	G6_EG_SO	O	0/3.3 V DC (pulse)	Serial communication data signal
	7	G6_EG_IRN	I	3.3 V DC	Engine interrupt signal
	8	GND	-	-	Ground
	9	GND	-	-	Ground
	10	HLD_ENG	I	3.3 V DC	Engine hold signal
	11	SLEEP_ENG	I	3.3 V DC	Sleep signal
	12	HSYNC_DP	I	0/3.3 V DC (pulse)	Image control signal
	13	HSYNC_DN	I	0/3.3 V DC (pulse)	Image control signal
	14	HSYNC_CP	I	0/3.3 V DC (pulse)	Image control signal
	15	HSYNC_CN	I	0/3.3 V DC (pulse)	Image control signal
	16	HSYNC_BP	I	0/3.3 V DC (pulse)	Image control signal
	17	HSYNC_BN	I	0/3.3 V DC (pulse)	Image control signal
	18	HSYNC_AP	I	0/3.3 V DC (pulse)	Image control signal
	19	HSYNC_AN	I	0/3.3 V DC (pulse)	Image control signal
	20	VSYNC_DP	I	0/3.3 V DC (pulse)	Image control signal
	21	VSYNC_DN	I	0/3.3 V DC (pulse)	Image control signal
	22	VSYNC_CP	I	0/3.3 V DC (pulse)	Image control signal
	23	VSYNC_CN	I	0/3.3 V DC (pulse)	Image control signal
	24	VSYNC_BP	I	0/3.3 V DC (pulse)	Image control signal
	25	VSYNC_BN	I	0/3.3 V DC (pulse)	Image control signal
	26	VSYNC_AP	I	0/3.3 V DC (pulse)	Image control signal
	27	VSYNC_AN	I	0/3.3 V DC (pulse)	Image control signal
	28	GND	-	-	Ground
	29	SAR_VCLK_P	I	0/3.3 V DC (pulse)	Clock signal
	30	SAR_VCLK_N	I	0/3.3 V DC (pulse)	Clock signal
	31	GND	-	-	Ground
	32	SAR_CH3_P	I	0/3.3 V DC (pulse)	Image control signal
	33	SAR_CH3_N	I	0/3.3 V DC (pulse)	Image control signal
	34	GND	-	-	Ground
	35	SAR_CH2_P	I	0/3.3 V DC (pulse)	Image control signal
	36	SAR_CH2_N	I	0/3.3 V DC (pulse)	Image control signal
	37	GND	-	-	Ground

Connector	Pin	Signal	I/O	Voltage	Description
YC1	38	SAR_CH1_P	I	0/3.3 V DC (pulse)	Image control signal
Connected to main PWB	39	SAR_CH1_N	I	0/3.3 V DC (pulse)	Image control signal
	40	GND	-	-	Ground
YC2	1	VDN(K)	O	LVDS	Video data LVDS(-) (black)
Connected to LSU connect PWB	2	VDP(K)	O	LVDS	Video data LVDS(+) (black)
	3	SH(K)	O	0/3.3 V DC	Sample / hold signal (black)
	4	BD(K)	I	0/3.3 V DC (pulse)	Horizontal synchronization signal (black)
	5	SGND	-	-	Ground
	6	VDN(M)	O	LVDS	Video data LVDS(-) (magenta)
	7	VDP?M?	O	LVDS	Video data LVDS(+) (magenta)
	8	SH(M)	O	0/3.3 V DC	Sample / hold signal (magenta)
	9	BD(M)	I	0/3.3 V DC (pulse)	Horizontal synchronization signal (magenta)
	10	SGND	-	-	Ground
	11	VDN?C?	O	LVDS	Video data LVDS(-) (cyan)
	12	VDP?C?	O	LVDS	Video data LVDS(+) (cyan)
	13	SH?C?	O	0/3.3 V DC	Sample / hold signal (cyan)
	14	BD?C?	I	0/3.3 V DC (pulse)	Horizontal synchronization signal (cyan)
	15	SGND	-	-	Ground
	16	VDN?Y?	O	LVDS	Video data LVDS(-) (yellow)
	17	VDP?Y?	O	LVDS	Video data LVDS(+) (yellow)
	18	SH?Y?	O	0/3.3 V DC	Sample / hold signal (yellow)
	19	BD?Y?	I	0/3.3 V DC (pulse)	Horizontal synchronization signal (yellow)
	20	SGND	-	-	Ground
YC3	1	N.C (SLEEPOFF)	-	-	Not used
Connected to engine PWB	2	ENG_HLD	O	0/3.3 V DC	Engine hold signal
	3	MK2-ENBL	O	0/3.3 V DC	Key card enable signal
	4	Power_Off	O	0/3.3 V DC	Sleep signal
	5	NC	-	-	Not used
	6	NC	-	-	Not used
	7	5V4	I	5 V DC	5 V DC power output to EPWB
	8	3.3V0	I	3.3 V DC	3.3 V DC power output to EPWB
	9	3.3V4	I	3.3 V DC	3.3 V DC power output to EPWB
	10	3.3V4	I	3.3 V DC	3.3 V DC power output to EPWB
	11	NC	-	-	Not used
	12	GND	-	-	Ground
	13	GND	-	-	Ground

Connector	Pin	Signal	I/O	Voltage	Description
YC3	14	GND	-	-	Ground
Connected to engine PWB	15	GND	-	-	Ground
	16	GND	-	-	Ground
	17	DEBUGTXD	I	0/3.3 V DC (pulse)	Serial communication data signal output
	18	DEBUGRXD	I	0/3.3 V DC (pulse)	Serial communication data signal output
	19	MCV_ENBL	O	0/3.3 V DC	Coin vender enable signal
	20	MCV_COPY_SIG	I	0/3.3 V DC	Coin vender control signal
	21	MCV_TXD	I	0/3.3 V DC (pulse)	Serial communication data signal output
	22	MCV_RXD	O	0/3.3 V DC (pulse)	MCV: On/Off
	23	MCV_FED_COUNT	I	0/3.3 V DC	Coin vender control signal
	24	MCV_EJ_COUNT	I	0/3.3 V DC	Coin vender control signal
	25	PVSYNC	I	0/3.3 V DC (pulse)	Vertical Synchronization signal
	26	NC	-	-	Not used
	27	DC1_COUNT	I	0/3.3 V DC	Key counter count signal
	28	ENG_CLK	O	0/3.3 V DC (pulse)	Clock signal
	29	ENG_SI	I	0/3.3 V DC (pulse)	Serial communication data signal output
	30	ENG_SO	O	0/3.3 V DC (pulse)	Serial communication data signal input
	31	ENG_BSY	I	0/3.3 V DC	Busy signal
	32	ENG_DIR	I	0/3.3 V DC	Communication direction switch signal
	33	ENG_IRN	I	0/3.3 V DC	Interrupt signal
	34	NC	-	-	Not used
	35	BDN_E(K)	I	0/3.3 V DC (pulse)	Horizontal synchronization signal (black)
	36	BDN_E(M)	I	0/3.3 V DC (pulse)	Horizontal synchronization signal (magenta)
	37	BDN_E(C)	I	0/3.3 V DC (pulse)	Horizontal synchronization signal (cyan)
	38	BDN_E(Y)	I	0/3.3 V DC (pulse)	Horizontal synchronization signal (yellow)
YC4	1	PAPEMP3	O	0/3.3 V DC	PS3: On/Off
Connected to engine PWB	2	PAPEMP4	O	0/3.3 V DC	PS4: On/Off
	3	LIFTFULL2	O	0/3.3 V DC	LS2: On/Off
	4	FEEDSW2	O	0/3.3 V DC	FS2: On/Off
	5	RIGHT_COVER_SET	O	0/3.3 V DC	RCSW2: On/Off
	6	PAPLSIZE2_3	O	0/3.3 V DC	PLSW2: On/Off
	7	PAPLSIZE2_2	O	0/3.3 V DC	PLSW2: On/Off
	8	PAPLSIZE2_1	O	0/3.3 V DC	PLSW2: On/Off

Connector	Pin	Signal	I/O	Voltage	Description
YC4	9	PAPWSIZE2_1	O	0/3.3 V DC	PWSW2: On/Off
Connected to engine PWB	10	BO2_REM	I	0/3.3 V DC	LM2: On/Off
	11	LMOTOCP2	O	0/3.3 V DC	LM2 detection signal
	12	CAS2_CL_REM	I	0/24 V DC	PFCL2: On/Off
	13	MID2_CL_REM	I	0/24 V DC	MCL2: On/Off
	14	FEED_MT2_RDY	O	0/3.3 V DC	CM2 ready signal
	15	FEED_MT2_CLK	I	0/5 V DC (pulse)	CM2 clock signal
	16	FEED_MT2_REM	I	0/5 V DC	CM2: On/Off
YC5	1	FEED_MT2_CW	O	0/5 V DC	CM2 drive switch signal
Connected to conveying motor 2, paper feed clutch 2, mid clutch 2	2	FEED_MT2_RDY	I	0/3.3 V DC	CM2 ready signal
	3	FEED_MT2_CLK	O	0/5 V DC (pulse)	CM2 clock signal
	4	FEED_MT2_REM	O	0/5 V DC	CM2: On/Off
	5	GND	-	-	GROUND
	6	24VIL	O	24 V DC	24 V DC power output to CM2
	7	CAS2_CL_REM	O	0/24 V DC	PFCL2: On/Off
	8	24V4	O	24 V DC	24 V DC power output to PFCL2
	9	MID2_CL_REM	O	0/24 V DC	MCL2: On/Off
	10	24V4	O	24 V DC	24 V DC power output to MCL2
YC6	1	CN-3	I	0/3.3 V DC	PWSW2: On/Off
Connected to paper length switch 2, paper width switch 2	2	CN-2	I	0/3.3 V DC	PWSW2: On/Off
	3	GND	-	-	GROUND
	4	CN-1	I	0/3.3 V DC	PWSW2: On/Off
	5	SIZE-1	I	0/3.3 V DC	PLSW2: On/Off
	6	GND	-	-	GROUND

Connector	Pin	Signal	I/O	Voltage	Description
YC7	1	3.3V4	O	3.3 V DC	3.3 V DC power output to PS3
Connected to paper sensor 3, paper sensor 4, lift sensor 2	2	GND	-	-	GROUND
	3	PAPEMP3	I	0/3.3 V DC	PS3: On/Off
	4	3.3V4	O	3.3 V DC	3.3 V DC power output to PS4
	5	GND	-	-	GROUND
	6	PAPEMP4	I	0/3.3 V DC	PS4: On/Off
	7	3.3V4	O	3.3 V DC	3.3 V DC power output to LS2
	8	GND	-	-	GROUND
	9	LIFTFULL2	I	0/3.3 V DC	LS2: On/Off
YC8	1	GND	-	-	GROUND
Connected to lift motor 2, feed sensor 2, right cover 2	2	BO2_REM	O	0/3.3 V DC	LM2: On/Off
	3	3.3V4	O	3.3 V DC	3.3 V DC power output to LS2
	4	GND	-	-	GROUND
	5	FEEDSW2	I	0/3.3 V DC	FS2: On/Off
	6	RIGHT COVER SET	I	0/3.3 V DC	RCSW2: On/Off
	7	GND	-	-	GROUND
YC9	1	24V4	O	24 V DC	24 V DC power output to the coin vender
Connected to coin vender	2	SGND	-	-	GROUND
	3	SGND	-	-	GROUND
	4	MCV_ENBL	I	0/3.3 V DC	Coin vender enable signal
	5	FGND	-	-	GROUND
	6	MCV_FED_COUNT	O	0/3.3 V DC	Coin vender control signal
	7	MCV_EJ_COUNT	O	0/3.3 V DC	Coin vender control signal
	8	MCV_COPY_SIG	O	0/3.3 V DC	Coin vender control signal
	9	MCV_UART_TXD	O	0/3.3 V DC (pulse)	Serial communication data signal output
	10	SGND	-	-	GROUND
	11	MCV_UART_RXD	I	0/3.3 V DC (pulse)	MCV: On/Off
	12	SGND	-	-	GROUND
YC13	1	RESET0	O	0/3.3 V DC	Reset signal
Connected to main PWB	2	WAKEUP0	I	0/3.3 V DC	Control signal
	3	AUDIO0	O	Analog	AUDIO signal
	4	GND	-	-	GROUND
	5	USB_DP0	I/O	-	USB data signal

Connector	Pin	Signal	I/O	Voltage	Description
YC13	6	USB_DN0	I/O	-	USB data signal
Connected to main PWB	7	VBUS0	I	3.3 V DC	3.3 V DC power output to USB
	8	GND	-	-	GROUND
	9	RESET1	O	0/3.3 V DC	Reset signal
	10	WAKEUP1	I	0/3.3 V DC	Control signal
	11	AUDIO1	O	Analog	AUDIO signal
	12	GND	-	-	GROUND
	13	USB_DP1	I/O	-	USB data signal
	14	USB_DN1	I/O	-	USB data signal
	15	VBUS1	I	3.3 V DC	3.3 V DC power output to USB
YC14	1	5V_CUT0	O	0/3.3 V DC	DC5V cut signal
Connected to main PWB	2	GND	-	-	GROUND
	3	5V3	I	5 V DC	5 V DC power output to MPWB
	4	GND	-	-	GROUND
	5	5V_CUT1	O	0/3.3 V DC	DC5V cut signal
	6	GND	-	-	GROUND
YC15	1	12V0	I	24 V DC	24 V DC power input from PSPWB
Connected to power source unit	2	12V0	I	24 V DC	24 V DC power input from PSPWB
	3	12V0	I	24 V DC	24 V DC power input from PSPWB
	4	12V0	I	24 V DC	24 V DC power input from PSPWB
	5	GND	-	-	GROUND
	6	GND	-	-	GROUND
	7	GND	-	-	GROUND
	8	GND	-	-	GROUND
YC16	1	24V4	I	24 V DC	24 V DC power output to EPWB
Connected to engine PWB	2	24V4	I	24 V DC	24 V DC power output to EPWB
	3	GND	-	-	GROUND
	4	GND	-	-	GROUND
	5	GND	-	-	GROUND
	6	24VIL	I	24 V DC	24 V DC power output to EPWB
YC17	1	12V0	I	24 V DC	24 V DC power input from MPWB
Connected to main PWB	2	12V0	I	24 V DC	24 V DC power input from MPWB
	3	12V0	I	24 V DC	24 V DC power input from MPWB
	4	GND	-	-	GROUND
	5	GND	-	-	GROUND
	6	GND	-	-	GROUND

Connector	Pin	Signal	I/O	Voltage	Description
YC20	1	24V4(NC)	-	-	Not used
Connected to main switch	2	5V4	O	5 V DC	5 V DC power output to MSW
	3	SHUTDOWN	I	0/5 V DC	MSW: On/Off
YC22	1	VIDEO_TXD	I	0/3.3 V DC (pulse)	Video serial communication data signal
Connected to engine PWB	2	VIDEO_RXD	I	0/3.3 V DC (pulse)	Video serial communication data signal
	3	VIDEO_SCL	I	0/3.3 V DC (pulse)	Video clock signal
	4	VIDEO_READY	O	0/3.3 V DC (pulse)	Video ready signal
	5	VIDEO_SEL	I	0/3.3 V DC (pulse)	Video select signal
YC23	1	5V4	O	5 V DC	5 V DC power output to Key card
Connected to key card	2	5V4	O	5 V DC	5 V DC power output to key card
	3	5V4	O	5 V DC	5 V DC power output to key card
	4	5V4	O	5 V DC	5 V DC power output to key card
	5	5V4	O	5 V DC	5 V DC power output to key card
	6	5V4	O	5 V DC	5 V DC power output to key card
	7	5V4	O	5 V DC	5 V DC power output to key card
	8	5V4	O	5 V DC	5 V DC power output to key card
	9	MK2_ENBL_2	I	0/3.3 V DC	Key card enable signal
	10	24V4	O	24 V DC	24 V DC power output to key card
	11	MK2_RKEY7_2	O	0/3.3 V DC	Key card control signal
	12	MK2_RKEY6_2	O	0/3.3 V DC	Key card control signal
	13	MK2_RKEY5_2	O	0/3.3 V DC	Key card control signal
	14	MK2_RKEY4_2	O	0/3.3 V DC	Key card control signal
	15	MK2_RKEY3_2	O	0/3.3 V DC	Key card control signal
	16	MK2_RKEY2_2	O	0/3.3 V DC	Key card control signal
	17	MK2_RKEY1_2	O	0/3.3 V DC	Key card control signal
	18	MK2_RKEY0_2	O	0/3.3 V DC	Key card control signal
	19	GND	-	-	Ground
	20	MK2_COUNT_2	O	0/3.3 V DC	Key card count signal

Connector	Pin	Signal	I/O	Voltage	Description
YC24	1	GND	-	-	Ground
Connected to key counter	2	DC1_SET_2	I	0/3.3 V DC	Key counter set signal
	3	DC1_COUNT_2	O	0/3.3 V DC	Key counter count signal
	4	24V4	O	24 V DC	24 V DC power to key counter

2-3-4 ISC PWB

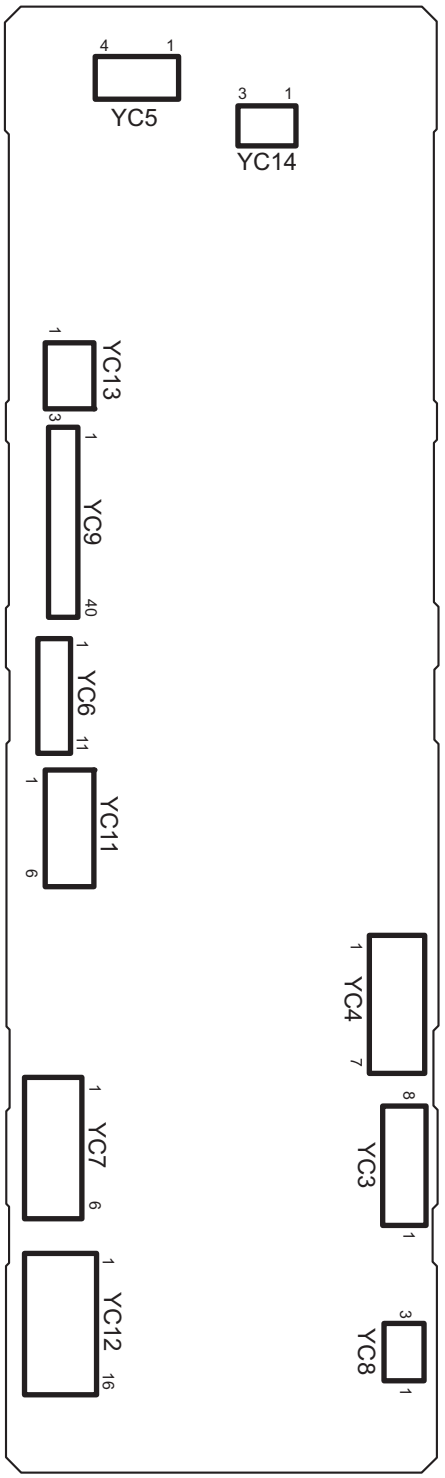

Figure 2-3-4 ISC PWB silk-screen diagram

Connector	Pin	Signal	I/O	Voltage	Description
YC3	1	SC_CLK	I	0/3.3 V DC (pulse)	Scanner clock signal
Connected to main PWB	2	SC_SO	O	0/3.3 V DC (pulse)	Serial communication data signal
	3	SC_SI	I	0/3.3 V DC (pulse)	Serial communication data signal
	4	SC_BSY	I	0/3.3 V DC	Scanner busy signal
	5	SC_HLDN	I	0/3.3 V DC	Scanner hold signal
	6	SC_DIR	I	0/3.3 V DC	Scanner communication direction signal
	7	SC_IRN	I	0/3.3 V DC	Scanner interrupt signal
	8	GND(SPARE)	-	-	Ground
YC4	1	GND	-	-	Ground
Connected to main PWB	2	HTPDN	O	0/3.3 V DC	Control signal
	3	LOCKN	O	0/3.3 V DC	Lock signal
	4	GND	-	-	Ground
	5	TX0N	O	0/3.3 V DC (pulse)	Transmission data signal
	6	TX0P	O	0/3.3 V DC (pulse)	Transmission data signal
	7	GND	-	-	Ground
YC5	1	SMOT AP	O	0/24 V DC (pulse)	ISUM drive control signal
Connected to scanner motor	2	SMOT BP	O	0/24 V DC (pulse)	ISUM drive control signal
	3	SMOT AN	O	0/24 V DC (pulse)	ISUM drive control signal
	4	SMOT BN	O	0/24 V DC (pulse)	ISUM drive control signal
YC6	1	5.1V5	O	5 V DC	5 V DC power to LEDPWB
Connected to LED lamp PWB	2	FAIL	I	0/3.3 V DC	Error signal
	3	SDA	I/O	0/3.3 V DC	Data signal
	4	SCL	O	0/3.3 V DC (pulse)	Clock signal
	5	VSET	O	Analog	Analog voltage
	6	SGND	-	-	Ground
	7	PGND	-	-	Ground
	8	PWM	O	0/3.3 V DC	PWM signal
	9	POW	O	0/3.3 V DC	LED: On/Off
	10	24V4	O	24 V DC	24 V DC power output to LEDPWB
	11	24V4	O	24 V DC	24 V DC power output to LEDPWB
YC7	1	24V4	I	24 V DC	24 V DC power input from EPWB
Connected to engine PWB	2	GND	-	-	Ground
	3	GND	-	-	Ground
	4	GND	-	-	Ground
	5	24V4	I	24 V DC	24 V DC power input from EPWB
	6	24V4	I	24 V DC	24 V DC power input from EPWB

Connector	Pin	Signal	I/O	Voltage	Description
YC8	1	3.3V5	O	3.3 V DC	3.3 V DC power output to HPS
Connected to home position sensor	2	GND	-	-	Ground
	3	HP_SW	I	0/3.3 V DC	HPS: On/Off
YC9	1	GND	-	-	Ground
Connected to CCD PWB	2	CCDCLK1	O	0/3.3 V DC (pulse)	Clock signal
	3	GND	-	-	Ground
	4	CCDCLK2	O	0/3.3 V DC (pulse)	Clock signal
	5	GND	-	-	Ground
	6	CP	O	0/3.3 V DC	Clamp signal
	7	GND	-	-	Ground
	8	RS	O	0/3.3 V DC	Reset signal
	9	VSG	O	0/3.3 V DC	Control signal
	10	TG	O	0/3.3 V DC	Control signal
	11	SH	O	0/3.3 V DC	Shift gate signal
	12	AFE_SI	I	0/3.3 V DC (pulse)	Serial communication data signal
	13	AFE_EN	O	0/3.3 V DC (pulse)	Enable signal
	14	AFE_SO	O	0/3.3 V DC (pulse)	Serial communication data signal
	15	AFECLK	O	0/3.3 V DC (pulse)	Clock signal
	16	GND	-	-	Ground
	17	DIS_CIS_1N	I	0/3.3 V DC (pulse)	Image data signal
	18	DIS_CIS_1P	I	0/3.3 V DC (pulse)	Image data signal
	19	GND	-	-	Ground
	20	DIS_CIS_2N	I	0/3.3 V DC (pulse)	Image data signal
	21	DIS_CIS_2P	I	0/3.3 V DC (pulse)	Image data signal
	22	GND	-	-	Ground
	23	DIS_CIS_3N	I	0/3.3 V DC (pulse)	Image data signal
	24	DIS_CIS_3P	I	0/3.3 V DC (pulse)	Image data signal
	25	GND	-	-	Ground
	26	DIS_CIS_4N	I	0/3.3 V DC (pulse)	Image data signal
	27	DIS_CIS_4P	I	0/3.3 V DC (pulse)	Image data signal
	28	GND	-	-	Ground
	29	DIS_CIS_5N	I	0/3.3 V DC (pulse)	Image data signal
	30	DIS_CIS_5P	I	0/3.3 V DC (pulse)	Image data signal
	31	GND	-	-	Ground
	32	DIS_CISCKN	I	0/3.3 V DC (pulse)	Clock signal
	33	DIS_CISCKP	I	0/3.3 V DC (pulse)	Clock signal

Connector	Pin	Signal	I/O	Voltage	Description
YC9	34	GND	-	-	Ground
Connected to CCD PWB	35	CCDSEL	I	0/3.3 V DC	Select signal
	36	GND	-	-	Ground
	37	AFE_MCLK	O	0/3.3 V DC (pulse)	Clock signal
	38	GND(AFE_SHD)	-	-	Ground
	39	CLPIN	O	0/3.3 V DC	Clamp signal
	40	GND(AFE_SHP)	-	-	Ground
	41	GND	-	-	Ground
YC11	1	5.1V5	O	5 V DC	5 V DC power output to CCDPWB
Connected to CCD PWB	2	GND	-	-	Ground
	3	10V5	O	DC10V	10 V DC power output to CCDPWB
	4	GND	-	-	Ground
	5	3.3V5	O	3.3 V DC	3.3 V DC power output to CCDPWB
	6	GND	-	-	Ground
YC12	1	GND(SPARE)	-	-	Ground
Connected to DP main PWB	2	DP_TMG	I	0/3.3 V DC	DPTS: On/Off
	3	DP_RDY	I	0/3.3 V DC	Ready signal
	4	DP_SEL	O	0/3.3 V DC	Select signal
	5	DP_CLK	O	0/3.3 V DC (pulse)	Clock signal
	6	DP_SO	O	0/3.3 V DC (pulse)	Serial communication data signal
	7	DP_SI	I	0/3.3 V DC (pulse)	Serial communication data signal
	8	DP_OPEN	I	0/3.3 V DC	DPOCSW: On/Off
	9	NC	-	-	Not used
	10	GND	-	-	Ground
	11	GND	-	-	Ground
	12	GND	-	-	Ground
	13	NC	-	-	Not used
	14	24V4	O	24 V DC	24 V DC power output to DPMPWB
	15	24V4	O	24 V DC	24 V DC power output to DPMPWB
	16	24V4	O	24 V DC	24 V DC power to DPMPWB
YC13	1	GND	-	-	Ground
Connected to original size sensor	2	ORG_SW	I	0/3.3 V DC	OSS: On/Off
	3	5.1V5	O	5 V DC	5 V DC power output to OSS

Connector	Pin	Signal	I/O	Voltage	Description
YC14	1	3.3V5	O	3.3 V DC	3.3 V DC power output to ODSW
Connected to original detection switch	2	GND	-	-	Ground
	3	CO_SW	I	0/3.3 V DC	ODSW: On/Off

2-3-5 IH PWB

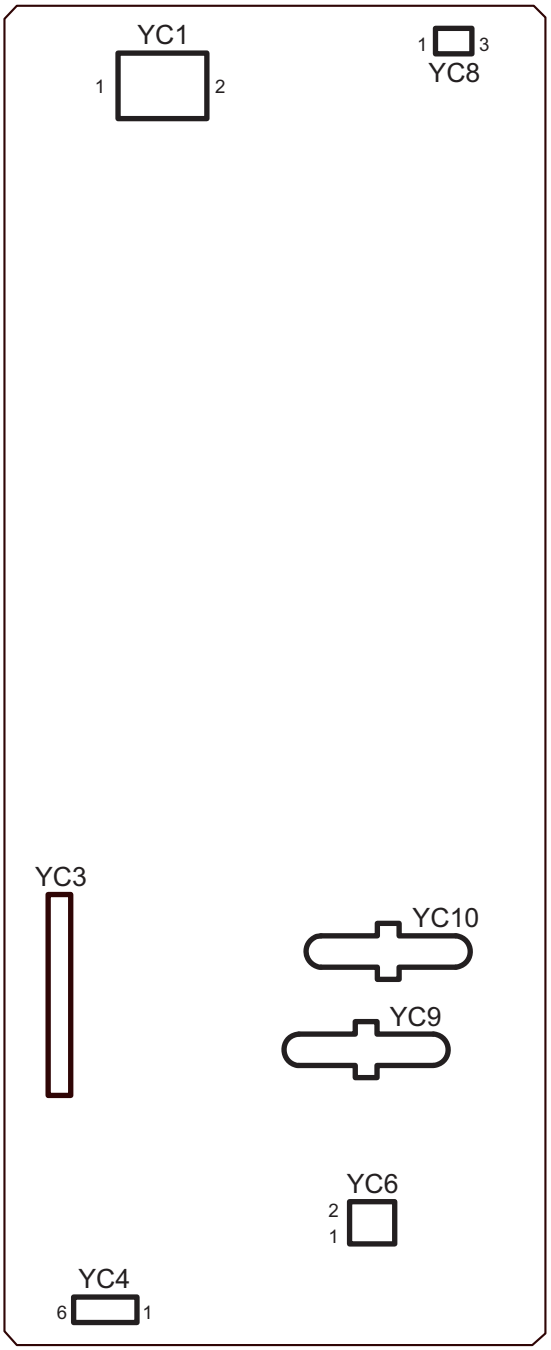

Figure 2-3-5 IH PWB silk-screen diagram

Connector	Pin	Signal	I/O	Voltage	Description
YC1	1	IH_NEUTRAL	I	AC100V	AC input voltage
Connected to AC connect PWB	2	IH_LIVE	I	AC100V	AC input voltage
YC3	1	TH2	-	Analog	Low side IGBT case temperature
Connected to IH control PWB	2	TH1	-	Analog	High side IGBT case temperature
	3	AC_CURRENT	-	Analog	AC input current
	4	AC_VOLTAGE	-	Analog	AC input voltage
	5	OUT_CURRENT	-	Analog	Output current
	6	IH_REM	-	0/5 V DC	IH: On/off
	7	ROTATION	-	0/5 V DC	TCBM control signal
	8	RXD	-	0/5 V DC (pulse)	Serial communication data signal input
	9	TXD	-	0/5 V DC (pulse)	Serial communication data signal output
	10	S1	-	0/5 V DC	For soft distinction
	11	IGBT1	-	0/5 V DC	gate output
	12	IGBT2	-	0/5 V DC	gate output
	13	S2	-	0/5 V DC	For soft distinction
	14	ERROR	-	0/5 V DC	Error signal
	15	5V	-	5 V DC	5 V DC power output to IHCONPWB
	16	GND	-	-	Ground
YC4	1	SGND	-	-	Ground
Connected to engine PWB	2	3.3V4	O	3.3 V DC	3.3 V DC power output to EPWB
	3	IH_REM	I	0/3.3 V DC	IH: On/off
	4	ROTATION	I	0/3.3 V DC	TCBM control signal
	5	RXD	I	0/3.3 V DC (pulse)	Serial communication data signal input
	6	TXD	O	0/3.3 V DC (pulse)	Serial communication data signal output
YC6	1	+15V-1	O	15 V DC	Control power supply
Connected to thermostat	2	+15V-2	I	15 V DC	Gate drive power supply
YC8	1	24VIL	O	24 V DC	24 V DC power output from EPWB
Connected to engine PWB	2	RELAY	I	0/3.3 V DC	RSW: On/Off
	3	PGND	-	-	Ground
YC9	1	IH_OUT1	O	390 V DC	Resonance circuit output
Connected to IH coil					

Connector	Pin	Signal	I/O	Voltage	Description
YC10 Connected to IH coil	1	IH_OUT2	O	1000 V DC	Resonance circuit output

CAUTION: Connectors YC1, YC3, YC6, YC9 and YC10 are not grounded, therefore, use caution not to damage the connectors during measurement of voltages.

2-3-6 Operation panel PWB main

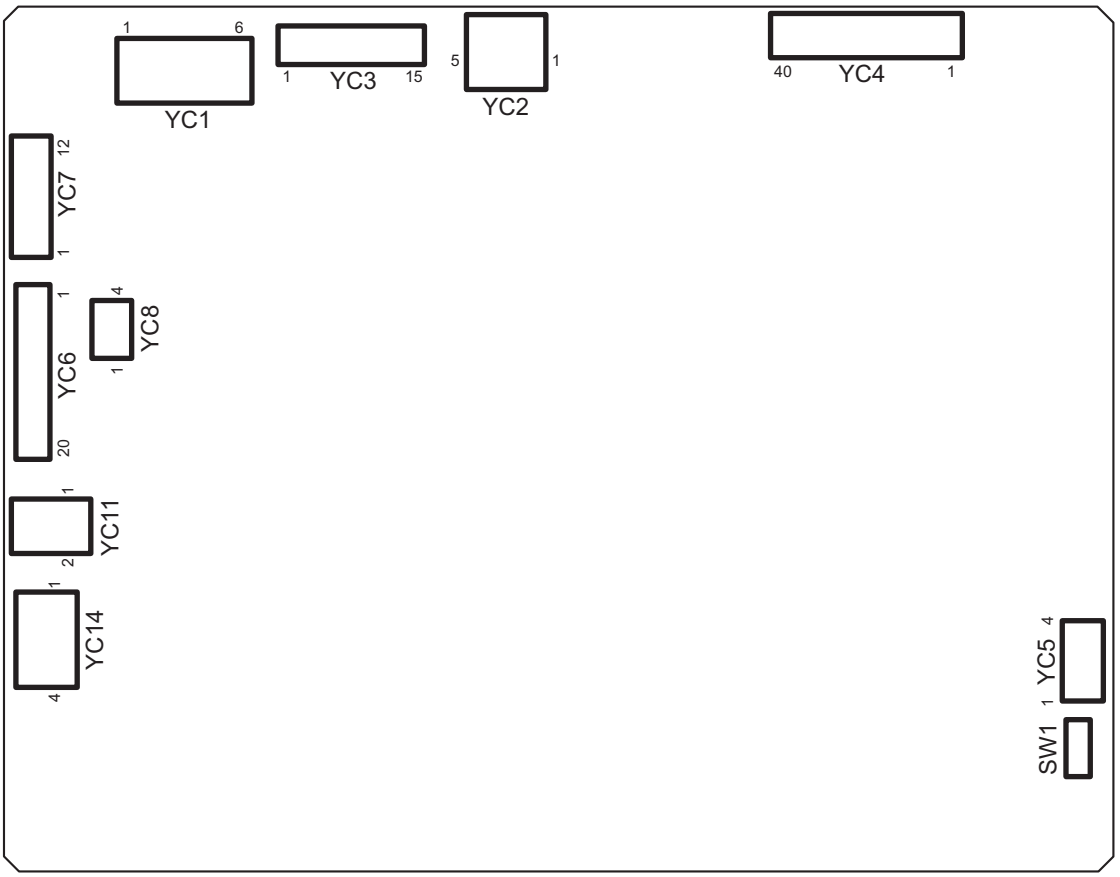

Figure 2-3-6 Operation panel PWB main silk-screen diagram

Connector	Pin	Signal	I/O	Voltage	Description
YC1	1	+5V	I	5 V DC	5 V DC power input from MPWB
Connected to main PWB	2	+5V	I	5 V DC	5 V DC power input from MPWB
	3	+5V	I	5 V DC	5 V DC power input from MPWB
	4	GND	-	-	Ground
	5	GND	-	-	Ground
	6	GND	-	-	Ground
YC2	1	VBUS	I	5 V DC	5 V DC power input
Connected to main PWB	2	DN	I/O	-	USB data signal
	3	DP	I/O	-	USB data signal
	4	ID	-	-	Not used
	5	GND	-	-	Ground
YC3	1	GND	-	-	Ground
Connected to main PWB	2	SECOND_TRAY_SW	-	-	Not used
	3	BEEP_POWERON	I	0/3.3 V DC	Sleep return signal
	4	ENERGY_SAVE	I	0/3.3 V DC	Energy save signal
	5	SUPND_POWER	I	3.3 V DC	3.3 V DC power input from MPWB
	6	LED_MEMORY_N	I	0/3.3 V DC	Memory LED control signal
	7	LED_ATTENTION_N	I	0/3.3 V DC	Attention LED control signal
	8	LED_PROCESSING_N	I	0/3.3 V DC	Processing LED control signal
	9	SHUT_DOWN	I	0/3.3 V DC	24 V down signal
	10	LIGHTOFF_POWERON	I	0/3.3 V DC	Sleep return signal
	11	AUDIO	I	Analog	Audio output signal
	12	PANEL RESET	I	0/3.3 V DC	Reset signal
	13	INT_POWER KEY_N	O	0/3.3 V DC	Power key: On/Off
	14	PANEL_STATUS	O	0/3.3 V DC	Operation panel status signal
	15	SGND	-	-	Ground

Connector	Pin	Signal	I/O	Voltage	Description
YC4	1	SGND	-	-	Ground
Connected to LCD	2	SGND	-	-	Ground
	3	CK	O	0/3.3 V DC (pulse)	LCD clock signal
	4	SGND	-	-	Ground
	5	SGND	-	-	Ground
	6	SC	O	0/3.3 V DC	LCD Control signal
	7	R0(LSB)	O	0/3.3 V DC	LCD Control signal
	8	R1	O	0/3.3 V DC	LCD Control signal
	9	R2	O	0/3.3 V DC	LCD Control signal
	10	SGND	-	-	Ground
	11	R3	O	0/3.3 V DC	LCD Control signal
	12	R4	O	DC0V/3.3V	LCD control signal
	13	R5(MSB)	O	DC0V/3.3V	LCD control signal
	14	SGND	-	-	Ground
	15	G0(LSB)	O	DC0V/3.3V	LCD control signal
	16	G1	O	DC0V/3.3V	LCD control signal
	17	G2	O	DC0V/3.3V	LCD control signal
	18	SGND	-	-	Ground
	19	G3	O	DC0V/3.3V	LCD control signal
	20	G4	O	DC0V/3.3V	LCD control signal
	21	G5(MSB)	O	DC0V/3.3V	LCD control signal
	22	SGND	-	-	Ground
	23	B0(LSB)	O	DC0V/3.3V	LCD control signal
	24	B1	O	DC0V/3.3V	LCD control signal
	25	B2	O	DC0V/3.3V	LCD control signal
	26	SGND	-	-	Ground
	27	B3	O	DC0V/3.3V	LCD control signal
	28	B4	O	DC0V/3.3V	LCD control signal
	29	B5(MSB)	O	DC0V/3.3V	LCD control signal
	30	SGND	-	-	Ground
	31	H_SYNC	O	0/3.3 V DC(pulse)	LCD horizontal synchronizing signal
	32	SGND	-	-	Ground
	33	V_SYNC	O	0/3.3 V DC(pulse)	LCD vertical synchronizing signal
	34	SGND	-	-	Ground
	35	ENB	O	DC0V/3.3V	LCD enable signal
	36	CM	O	DC0V/3.3V	LCD mode switch signal
	37	3.3V	O	3.3 V DC	3.3 V DC power output to LCD

Connector	Pin	Signal	I/O	Voltage	Description
YC4	38	3.3V	O	3.3 V DC	3.3 V DC power output to LCD
Connected to LCD	39	3.3V	O	3.3 V DC	3.3 V DC power output to LCD
	40	3.3V	O	3.3 V DC	3.3 V DC power output to LCD
YC5	1	BOT Y-	I	Analog	Touch panel Y- position signal
Connected to touch panel	2	LEFT X+	I	Analog	Touch panel X+ position signal
	3	TOP Y+	I	Analog	Touch panel Y+ position signal
	4	RIGHT X-	I	Analog	Touch panel X- position signal
YC6	1	KEY4	I	0/3.3 V DC (pulse)	Operation panel key scan return signal 4
Connected to operation panel PWB sub	2	SCAN2	O	0/3.3 V DC (pulse)	Scan signal 2
	3	INT_POWER KEY_N	I	0/3.3 V DC	Power key: On/Off
	4	SCAN1	O	0/3.3 V DC (pulse)	Scan signal 1
	5	LED1	O	0/3.3 V DC (pulse)	Operation panel LED display drive signal 1
	6	SUPND_POWER	O	3.3 V DC	3.3 V DC power output to OPWB2
	7	KEY3	I	0/3.3 V DC (pulse)	Operation panel key scan return signal 3
	8	KEY2	I	0/3.3 V DC (pulse)	Operation panel key scan return signal 2
	9	KEY1	I	0/3.3 V DC (pulse)	Operation panel key scan return signal 1
	10	LED0	O	0/3.3 V DC (pulse)	Operation panel LED display drive signal 0
	11	KEY0	I	0/3.3 V DC (pulse)	Operation panel key scan return signal 0
	12	SCAN4	O	0/3.3 V DC (pulse)	Scan signal 4
	13	SCAN3	O	0/3.3 V DC (pulse)	Scan signal 3
	14	SCAN0	O	0/3.3 V DC (pulse)	Scan signal 0
	15	GND	-	-	Ground
	16	GND	-	-	Ground
	17	GND	-	-	Ground
	18	GND	-	-	Ground
	19	GND	-	-	Ground
	20	GND	-	-	Ground

Connector	Pin	Signal	I/O	Voltage	Description
YC7	1	SCAN4	O	0/3.3 V DC (pulse)	Scan signal 4
Connected to operation panel PWB sub	2	KEY5	I	0/3.3 V DC (pulse)	Operation panel key scan return signal 5
	3	KEY6	I	0/3.3 V DC (pulse)	Operation panel key scan return signal 6
	4	KEY7	I	0/3.3 V DC (pulse)	Operation panel key scan return signal 7
	5	SCAN0	O	0/3.3 V DC (pulse)	Scan signal 0
	6	SCAN1	O	0/3.3 V DC (pulse)	Scan signal 1
	7	SCAN2	O	0/3.3 V DC (pulse)	Scan signal 2
	8	SCAN3	O	0/3.3 V DC (pulse)	Scan signal 3
	9	LED2	O	0/3.3 V DC (pulse)	Operation panel LED display drive signal 2
	10	LED3	O	0/3.3 V DC (pulse)	Operation panel LED display drive signal 3
	11	LED4	O	0/3.3 V DC (pulse)	Operation panel LED display drive signal 4
	12	GND	-	-	Ground
YC8	1	PROCESSING_LED	O	0/3.3 V DC	Processing LED control signal
Connected to operation panel LED PWB	2	MEMORY LED	O	0/3.3 V DC	Memory LED control signal
	3	ATTENTION_LED	O	0/3.3 V DC	Attention LED control signal
	4	GND	-	-	Ground
YC11	1	VO2	O	Analog	Speaker sound signal (+)
Connected to speaker	2	VO1	O	Analog	Speaker sound signal (-)
YC14	1	LED_A	O	0/3.3 V DC	LED control signal
Connected to LCD	2	NC	-	-	Not used
	3	LED_C	I	0/3.3 V DC	LED control signal
	4	NC	-	-	Not used

2-3-7 Power source PWB

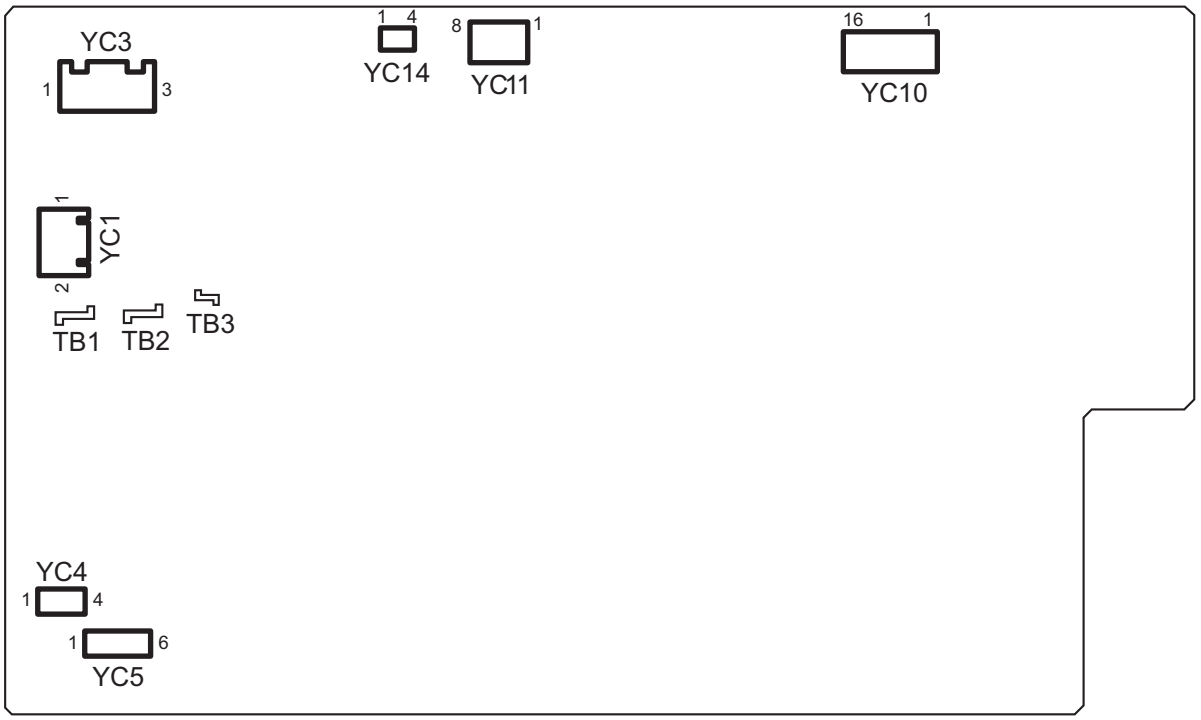

Figure 2-3-7 Power source PWB silk-screen diagram

Connector	Pin	Signal	I/O	Voltage	Description
TB	1	LIVE	I	220-240 V AC	AC power input
Connected to AC inlet and AC connect PWB	2	NEUTRAL	I	220-240 V AC	AC power input
	3	LIVE	I	220-240 V AC	AC power input
YC1	1	MSW_OUT	O	220-240 V AC	AC power output to MSW
Connected to main power switch	2	MSW_IN	I	220-240 V AC	AC power input from MSW
YC3	1	LIVE(M)	O	AC100V	AC power output to ACCPWB
Connected to AC connect PWB	2	NC	-	-	Not used
	3	NEUTRAL	O	AC100V	AC power output to ACCPWB
YC4	1	LIVE_CASSETE_IN	I	AC100V	AC power input from PFDSW
Connected to paper feeder detection switch	4	LIVE_CASSETE_OUT	O	AC100V	AC power output to PFDSW
YC5	1	LIVE_CASSETE_OUT	O	220-240 V AC	AC power output to CH
Connected to cassette heater	2	LIVE_CASSETE_OUT	-	-	Not used
	3	NC	-	-	Not used
	4	NC	-	-	Not used
	5	NEUTRAL	O	220-240 V AC	AC power output to CH
	6	NEUTRAL	-	-	Not used
YC10	1	24V4	O	24 V DC	24 V DC power output to EPWB
Connected to engine PWB, engine connect PWB	2	24V4	O	24 V DC	24 V DC power output to EPWB
	3	24V4	O	24 V DC	24 V DC power output to EPWB
	4	24V4	O	24 V DC	24 V DC power output to ECPWB
	5	24V4	O	24 V DC	24 V DC power output to ECPWB
	6	24V4(N.C)	-	-	Not used
	7	24V4(N.C)	-	-	Not used
	8	24V4(N.C)	-	-	Not used
	9	GND	-	-	Ground
	10	GND	-	-	Ground
	11	GND	-	-	Ground
	12	GND	-	-	Ground
	13	GND	-	-	Ground

Connector	Pin	Signal	I/O	Voltage	Description
YC10	14	GND(N.C)	-	-	Not used
Connected to engine PWB, engine connect PWB	15	GND(N.C)	-	-	Not used
	16	GND(N.C)	-	-	Not used
YC11	1	GND	-	-	Ground
Connected to video PWB	2	GND	-	-	Ground
	3	GND	-	-	Ground
	4	GND	-	-	Ground
	5	12V0	O	12 V DC	12 V DC power output to VPWB
	6	12V0	O	12 V DC	12 V DC power output to VPWB
	7	12V0	O	12 V DC	12 V DC power output to VPWB
	8	12V0	O	12 V DC	12 V DC power output to VPWB
YC14	1	POWER_OFF	I	0/3.3 V DC	Sleep mode signal: On/Off
Connected to engine connect PWB	2	DRUM_HEAT_REM	I	0/3.3 V DC	FH: On/Off
	3	GND	-	-	Not used
	4	FSR_RELAY_REM	-	-	Not used

2-3-8 DP main PWB

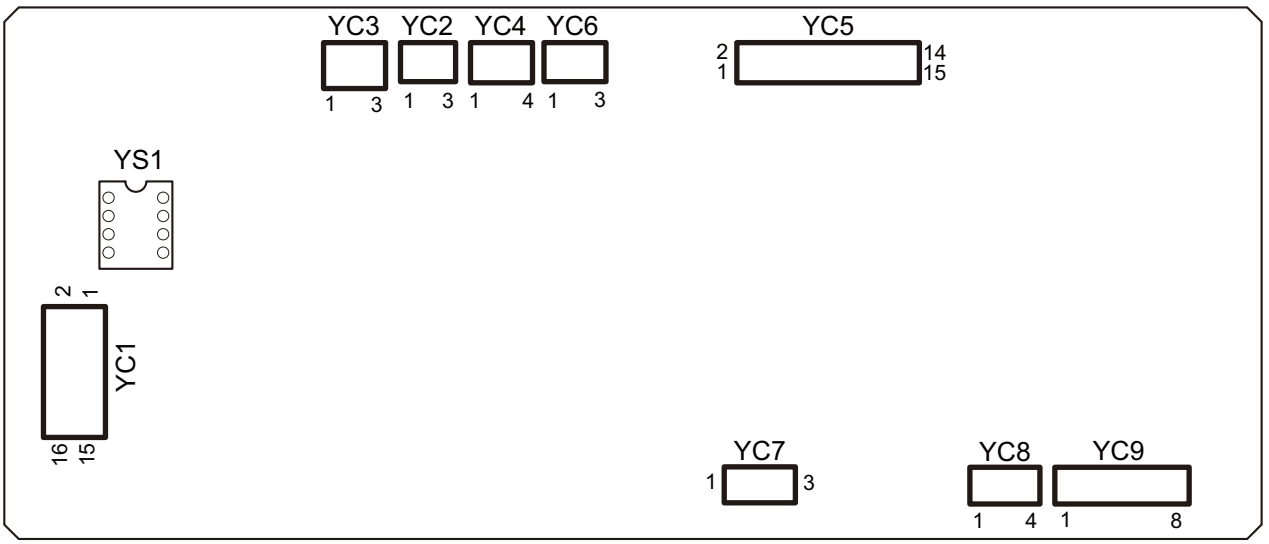

Figure 2-3-8 DP main PWB silk-screen diagram

Connector	Pin	Signal	I/O	Voltage	Description
YC1	1	FG	-	-	Ground
Connected to engine PWB	2	DP_PAGESET	O	0/3.3 V DC	DPTS: On/Off
	3	ENG_RDY	O	0/3.3 V DC	Ready signal
	4	ENG_SEL	I	0/3.3 V DC	Select signal
	5	ENG_CLK	I	0/3.3 V DC(pulse)	Clock signal
	6	ENG_SI	I	0/3.3 V DC(pulse)	Serial communication data signal
	7	ENG_SO	O	0/3.3 V DC(pulse)	Serial communication data signal
	8	ENG_OPEN	O	0/3.3 V DC	DPOCS: On/Off
	9	NC	-	-	Not used
	10	GND	-	-	Ground
	11	GND	-	-	Ground
	12	GND	-	-	Ground
	13	NC	-	-	Not used
	14	+24V	O	24 V DC	24 V DC power input from ISCPWB
	15	+24V	O	24 V DC	24 V DC power input from ISCPWB
	16	+24V	O	24 V DC	24 V DC power input from ISCPWB
YC2	1	ANODE	O	3.3 V DC	3.3 V DC power output to DPOLS
Connected to DP original size length sensor	2	GND	-	-	Ground
	3	LS_SW	I	0/3.3 V DC	DPOLS: On/Off
YC3	1	ANODE	O	3.3 V DC	3.3 V DC power output to DPOS
Connected to DP original sensor	2	GND	-	-	Ground
	3	SET_SW	I	0/3.3 V DC	DPOS: On/Off
YC4	1	WID1	I	0/3.3 V DC	DPOWS: On/Off
Connected to DP original size width sensor	2	GND	-	-	Ground
	3	WID2	I	0/3.3 V DC	DPOWS: On/Off
	4	WID3	I	0/3.3 V DC	DPOWS: On/Off

Connector	Pin	Signal	I/O	Voltage	Description
YC5	1	ANODE	O	3.3 V DC	3.3 V DC power output to DPPFS
DConnected to DP paper feed sensor,DP registration sensor,DP open/close sensor,DP switchback sensor and DP timing sensor	2	GND	-	-	Ground
	3	FEED SW	I	0/3.3 V DC	DPPFS: On/Off
	4	ANODE	O	3.3 V DC	3.3 V DC power output to DPRS
	5	GND	-	-	Ground
	6	REGIST_SW	I	0/3.3 V DC	DPRS: On/Off
	7	ANODE	O	3.3 V DC	3.3 V DC power output to DPOCS
	8	GND	-	-	Ground
	9	DP_OPENSW	I	0/3.3 V DC	DPOCS: On/Off
	10	ANODE	O	3.3 V DC	3.3 V DC power output to DPSBS
	11	GND	-	-	Ground
	12	HP_SW	I	0/3.3 V DC	DPSBS: On/Off
	13	ANODE	O	3.3 V DC	3.3 V DC power output to DPTS
	14	GND	-	-	Ground
	15	TMG_SW	I	0/3.3 V DC	DPTS: On/Off
YC6	1	GND	-	-	Ground
Connected to DP LED PWB	2	LED_REM	O	0/3.3 V DC	LED control signal
	3	LED_PW	O	0/3.3 V DC	LED control signal
YC7	1	+24V	O	24 V DC	24 V DC power output to DPILSW
Connected to DP interlock switch	2	GND	-	-	Ground
	3	+R24V	I	24 V DC	24 V DC power input from DPILSW
YC8	1	FEED_CL	O	0/24 V DC	DPPFCL: On/Off
Connected to DP paper feed clutch and DP registration clutch	2	+R24V	O	24 V DC	24 V DC power output to DPPFCL
	3	REGIST_CL	O	0/24 V DC	DPRCL: On/Off
	4	+R24V	O	24 V DC	24 V DC power output to DPRCL
YC9	1	OUT1B	O	0/24 V DC(pulse)	DPPFM drive control signal
Connected to DP paper feed motor and DP switchback motor	2	OUT1A	O	0/24 V DC(pulse)	DPPFM drive control signal
	3	OUT2A	O	0/24 V DC(pulse)	DPPFM drive control signal
	4	OUT2B	O	0/24 V DC(pulse)	DPPFM drive control signal
	5	OUT1B	O	0/24 V DC(pulse)	DPSBM drive control signal
	6	OUT1A	O	0/24 V DC(pulse)	DPSBM drive control signal
	7	OUT2A	O	0/24 V DC(pulse)	DPSBM drive control signal
	8	OUT2B	O	0/24 V DC(pulse)	DPSBM drive control signal

2-4-1 Appendixes

(1) Maintenance kits

Maintenance part name		Parts No.	Alternative part No.
Name used in service	Name used in parts list		
MK-8315A/MAINTENANCE KIT (200,000 sheets)	MK-8315A/MAINTENANCE KIT	1702MV0UN0	072MV0UN
Transfer roller unit	HOLDER TRANSFER ASSY	-	-
Drum unit	DRUM UNIT MK	-	-
Developer unit K	DLP UNIT BK MK	-	-
Intermediate transfer unit	IMAGE UNIT MK	-	-
Fuser unit	FUSER UNIT MK	-	-
Primary feed unit	PRIMARY FEED ASS'Y	-	-
MP separation pad	PAD SEPARATION ASSY SP	-	-
MP paper feed roller	ROLLER MPF ASSY SP	-	-
MK-8315B/MAINTENANCE KIT (200,000 sheets)	MK-8315B/MAINTENANCE KIT	1702MV0UN1	072MV0U1
Drum unit	DRUM UNIT	-	-
Developer unit C	DLP UNIT C	-	-
Developer unit M	DLP UNIT M	-	-
Developer unit Y	DLP UNIT Y	-	-

(2) Repetitive defects gauge

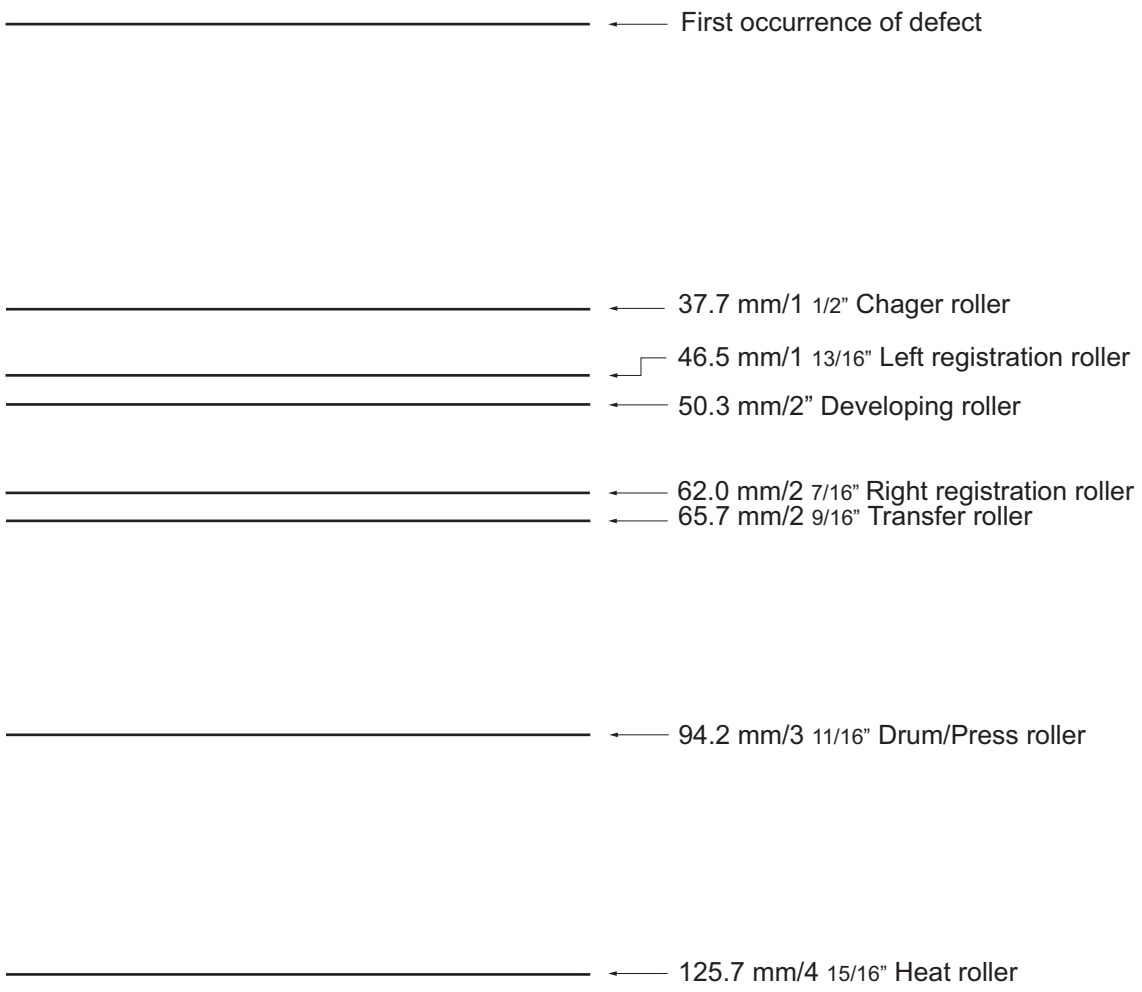

(3) Firmware environment commands

The printer maintains a number of printing parameters in its memory. These parameters may be changed permanently with the FRPO (Firmware RePrOgram) commands.
This section provides information on how to use the FRPO command and its parameters using examples.

Using FRPO commands for reprogramming the firmware

The current settings of the FRPO parameters are listed as the optional values on the service status page.

Note: Before changing any FRPO parameters, print out a service status page, so you will know the parameter values before the changes are made. To return FRPO parameters to their factory default values, send the FRPO INIT (FRPO-INITialize) command.(!R! FRPO INIT; EXIT;)

The FRPO command is sent to the printer in the following sequence:
!R! FRPO parameter, value; EXIT;
Example: Changing emulation mode to PC-PR201/65A
!R! FRPO P1, 11; EXIT;

FRPO parameters

Item	FRPO	Setting values	Factory setting
Default pattern resolution	B8	0: 300 dpi 1: 600 dpi	0
Copy count	C0	Number of copies to print:1-999	1
Page orientation	C1	0: Portrait 1: Landscape	0
Default font No. *	C2 C3 C5	Middle two digits of power-up font Last two digits of power-up font First two digits of power-up font	0 0 0
PCL font switch	C8	0:HP compatibility mode (Characters higher than 127 are not printed.) 32:Conventional mode (Characters higher than 127 are printed. Supported symbol sets: ISO-60 Norway [00D], ISO-15 Italian [00I], ISO-11 Sweden [00S], ISO-6 ASCII [00U], ISO-4 U.K. [01E], ISO-69 France [01F], ISO-21 Germany [01G], ISO-17 Spain [02S], Symbol [19M][a])	0
Total host buffer size	H8	0 to 99 in units of the size defined by FRPO S5	5
Form feed time-out value	H9	Value in units of 5 seconds (0 to 99).	6
Duplex binding	N4	0: Off 1: Long edge 2: Short edge	0
Sleep timer time-out time	N5	1 to 240 minutes [0: Off]	15
Ecoprint level	N6	0: Off 2: On	0

Item	FRPO	Setting values	Factory setting
Default emulation mode	P1	6: PCL 6 9: KPDL	6
Carriage-return action *	P2	0: Ignores 0x0d 1: Carriage-return 2: Carriage-return+linefeed	1
Linefeed action *	P3	0: Ignores 0x0d 1: Linefeed 2: Linefeed+carriage-return	1
Automatic emulation sensing (For KPDL3)	P4	0: AES disabled 1: AES enabled	0
Automatic emulation switching trigger (For KPDL3)	P7	0: Page eject commands 1: None 2: Page eject and prescribe EXIT 3: Prescribe EXIT 4: Formfeed (^L) 6: Page eject, prescribe EXIT and formfeed 10: Page eject commands; if AES fails, resolves to KPDL	10
Command recognition character	P9	ASCII code of 33 to 126	82 (R)
Default stacker	R0	1 (inner tray) 3 5	1

Item	FRPO	Setting values	Factory setting
Default paper size	R2	0: Size of the default paper cassette (See R4.) 1: Monarch (3-7/8 × 7-1/2 inches) 2: Business (4-1/8 × 9-1/2 inches) 3: International DL (11 × 22 cm) 4: International C5 (16.2 × 22.9 cm) 5: Executive (7-1/4 × 10-1/2 inches) 6: US Letter (8-1/2 × 11 inches) 7: US Legal (8-1/2 × 14 inches) 8: A4 (21.0 × 29.7 cm) 9: JIS B5 (18.2 × 25.7 cm) 10: A3 (29.7 ´ 42 cm) 11: B4 (25.7 ´ 36.4 cm) 12: US Ledger (11 ´ 17 inches) 13: ISO A5 14: A6 (10.5 × 14.8 cm) 15: JIS B6 (12.8 × 18.2 cm) 16: Commercial #9 (3-7/8 × 8-7/8 inches) 17: Commercial #6 (3-5/8 × 6-1/2 inches) 18: ISO B5 (17.6 × 25 cm) 19: Custom (11.7 × 17.7 inches) 30: C4 (22.9 ´ 32.4 cm) 31: Hagaki (10 × 14.8 cm) 32: Ofuku-hagaki (14.8 × 20 cm) 33: Officio II 39: 8K 40: 16K 42: 8.5 × 13.5 inches 50: Statement 51: Folio 52: Youkei 2 53: Youkei 4	0
Default cassette	R4	0: MP tray 1: Cassette 1 2: Cassette 2 3: Cassette 3 4: Cassette 4	1
MP tray paper size	R7	Same as the R2 values except: 0	8
A4/letter equation	S4	0: Off 1: On	1
Host buffer size	S5	0: 10kB (x H8) 1: 100kB (x H8) 2: 1024kB (x H8)	1
Wide A4	T6	0: Off 1: On	0
Line spacing *	U0	Lines per inch (integer value)	6
Line spacing *	U1	Lines per inch (fraction value)	0
Character spacing *	U2	Characters per inch (integer value)	10

Item	FRPO	Setting values	Factory setting
Character spacing *	U3	Characters per inch (fraction value)	0
Country code	U6	0: US-ASCII 1: France 2: Germany 3: UK 4: Denmark 5: Sweden 6: Italy 7: Spain 8: Japan 9: US Legal 10: IBM PC-850 (Multilingual) 11: IBM PC-860 (Portuguese) 12: IBM PC-863 (Canadian French) 13: IBM PC-865 (Norwegian) 14: Norway 15: Denmark 2 16: Spain 2 17: Latin America 21: US ASCII (U7 = 50 SET) 77: HP Roman-8 (U7 = 52 SET)	41
Code set at power up in daisy-wheel emulation	U7	0: Same as the default emulation mode (P1) 1: IBM 6: IBM PC-8 50: US ASCII (U6 = 21 SET) 52: HP Roman-8 (U6 = 77 SET)	53
Font pitch for fixed pitch scalable font	U8	Integer value in cpi: 0 to 99	10
	U9	Fraction value in 1/100 cpi: 0 to 99	0
Font height for the default scalable font *	V0	Integer value in 100 points: 0 to 9	0
	V1	Integer value in points: 0 to 99	12
	V2	Fraction value in 1/100 points: 0, 25, 50, 75	0
Default scalable font *	V3	Name of typeface of up to 32 characters, enclosed with single or double quotation marks	Courier

Item	FRPO	Setting values	Factory setting
Default weight (courier and letter Gothic)	V9	0: Courier = darkness Letter Gothic = darkness 1: Courier = regular Letter Gothic = darkness 4: Courier = darkness Letter Gothic = regular 5: Courier = regular Letter Gothic = regular	5
Color mode	W1	0: Monochrome (grayscale) 1: Color (CMYK)	1
Gloss mode	W6	0: Low (normal) 1: High	0
Paper type for the MP tray	X0	1: Plain 1 2: Transparency 3: Preprinted 4: Label 5: Bond 6: Recycle 7: Vellum 9: Letterhead 10: Color 11: Prepunched 12: Envelope 13: Cardstock 16: Thick 17: High quality 21: Custom1 22: Custom2 23: Custom3 24: Custom4 25: Custom5 26: Custom6 27: Custom7 28: Custom8	1

Item	FRPO	Setting values	Factory setting
Paper type for paper cassettes 1 to 2	X1 X2	1: Plain 3: Preprinted 5: Bond 6: Recycled 9: Letterhead 10: Color 11: Prepunched 17: High quality 21: Custom1 22: Custom2 23: Custom3 24: Custom4 25: Custom5 26: Custom6 27: Custom7 28: Custom8	1
Paper type for paper cassettes 3 to 4	X3 X4	1: Plain 3: Preprinted 5: Bond 6: Recycled 9: Letterhead 10: Color 11: Prepunched 17: High quality 21: Custom1 22: Custom2 23: Custom3 24: Custom4 25: Custom5 26: Custom6 27: Custom7 28: Custom8	1
PCL paper source	X9	0: Performs paper selection depending on media type. 1: Performs paper selection depending on paper sources.	0
Automatic continue for ‘Press GO’	Y0	0: Off 1: On	0
Automatic continue timer	Y1	Number from 0 to 99 in increments of 5 seconds	6 (30 secons)
Error message for device error	Y3	0: Not detect 1: Detect	0

Item	FRPO	Setting values	Factory setting
Duplex operation for specified paper type (Prepunched, Preprintedand Letterhead)	Y4	0: Off 1: On	0
Default operation for PDF direct printing	Y5	0: Enlarges or reduces the image to fit in the current paper size. Loads paper from the current paper cassette. 1: Through the image. Loads paper which is the same size as the image. 2: Enlarges or reduces the image to fit in the current paper size. Loads Letter, A4 size paper depending on the image size. 3: Through the image. Loads Letter, A4 size paper depending on the image size. 8: Through the image. Loads paper from the current paper cassette. 9: Through the image. Loads Letter, A4 size paper depending on the image size. 10: Enlarges or reduces the image to fit in the current paper size. Loads Letter, A4 size paper depending on the imagesize.	0
e-MPS error	Y6	0:Does not print the error report and display the error message. 1:Prints the error report. 2:Displays the error message. 3:Prints the error report and displays the error message.	3

a. Characters higher than 127 are printed regardless of the C8 value. However, setting C8 to 0 does not print character code 160.

(4) System Error (Fxxxx) Outline

The document is subscribed to describe the outline of the factors of the Fxxx errors that are not described in the
service manual. Please utilize it to refer to checking the factors.
Please utilize it as the measures when the system is not recovered after power off/on
or it frequently occurs.

* : It may be from the hardware factor while the error (Fxxx) is indicated.
  Please initially check the following.

  Check the DDR2 memory and neighboring parts:
  Check the contact of YS1 or YS2 with the memory. Replace the memory if the error repeats.
  Check the HDD if the error repeats after replacing the main board.
  Take care, however, of handling the data when formatting or replacing the HDD.
  Check the HDD : Replace the HDD if the error repeats after formatting the HDD.

No.	Content	Check procedure & check point	Remark 1	TASKalfa 2550ci
-	Lock-up at Welcome display (TASKalfa/Ecosys) (The display unchages after a certain time (Notes1: *** seconds))	1) Check connection of the harness (Panel to Main board), (Main board to HDD) and connectors and check function. 2) Check contact of the DDR memory by detaching and reattaching. and check function. replace it if available and check function. 3) Format the HDD and check function. (U024 FULL formatting) (*1) 4) Execute the U021Memory initializing to initialize the controller backup memory and check function. 5) Replace the panelmain board and check function. 6) Replace the main board and check function. 7) Retrieve the USBLOG and contact the Service Administrative Division. (*1) For the HDD standard model only.	*User data and installed software is deleted if executing the U024. Reinstallation is required.	[Main - Panel Interface] Main board:YC12, YC17,YC30 Panel board:YC1,YC2,YC3 [Main - HDD] Main board:YC1,YC27 [Check the contact with the DDR2 memory] Main board: YS1 (Notes1) 190 seconds
F000	CF000 appears in a certain time (Notes2: *** seconds) after the Welcome display continues Panel－Main board communication error	1) Check connection of the harness (Panel to Main board), (Main board to HDD) and connectors and check function. 2) Check contact of the DDR memory by detaching and reattaching. and check function. replace it if available and check function. 3) Format the HDD and check function. (U024 FULL formatting) (*1) 4) Execute the U021 Memory initializing to initialize the controller backup memory and check function. 5) Replace the main board and check function. 6) Replace the panelmain board and check function. 7) Retrieve the USBLOG and contact the Service Administrative Division. (*1) For the HDD standard model only.		[Main-Panel Interface] Main board: YC12, YC17, YC30 Panel borad: YC1,YC2,YC3 If the LEDs are in the state belwo when the F000 appears, the DDR2 memory failure may be the cause. Check contact of the YS1 with the memory. Memory LED turned on Attention LED turned on (Note2) 190 seconds
F10X F11X	An error is detected at OS or some of device drivers.	1) Format the HDD and check function. (U024 FULL formatting) (*1) 2) Execute the U021 Memory initializing to initialize the controller backup memory and check function. 3) Replace the main board and check function. 4) Replace the HDD and check function. (*1) 5) Retrieve the USBLOG and contact the Service Administrative Division. (*1) For the HDD standard model only.		
F12X	An error is detected at the Scan control section	1) Check connection of the harness (Scan/DP - Main board) and connectors and check function. 2) Format the HDD and check function. (U024 FULL formatting) (*1) 3) Execute the U021 Memory initializing to initialize the controller backup memory and check function. 4) Replace the Scan/DP board and check function. 5) Replace the main board and check function. 6) Retrieve the USBLOG and contact the Service Administrative Division. (*1) For the HDD standard model only.		[Main-Scan Interface] Main board:YC11,YC25 ISC board: YC3, YC4

No.	Content	Check procedure & check point	Remark 1	TASKalfa 2550ci
F13X	An error is detected at the Panel control section	1) Check connection of the harness (Panel - Main board) and connectors and check function. 2) Format the HDD and check function. (U024 FULL formatting) (*1) 3) Execute the U021 Memory initializing to initialize the controller backup memory and check function. 4) Replace the panel board and check function. (*2) 5) Replace the main board and check function. 6) Retrieve the USBLOG and contact the Service Administrative Division. (*1) For the HDD standard model only. (*2) For the model separating the main/panel PWBs.		[Main-Panel Interface] Main board:YC12,YC17,YC30 Panel board:YC1,YC2,YC3
F14X	An error is detected at the FAX control section	1) Check connection of the harness (FAX - Main board) and connectors and check function. 2) Format the HDD and check function. (U024 FULL formatting) (*1) 3) Execute the U021 Memory initializing to initialize the controller backup memory and check function. 4) Execute the U671 Clear FAX back up data (FAX DIMM clear) and check function. (*3) (Take cae of the received data since it is cleared) 5) Replace the FAX_DIMM and check function. 6) Replace the FAX board and check function. 7) Replace the main board and check function. 8) Retrieve the USBLOG and contact the Service Administrative Division. (*1) For the HDD standard model only. (*3) For the models using the main PWB with the flash for the FAX data.		F14A,F14F: KUIO error Main board (USB hub) [Main-KUIO Interface] Main board: YC8,YC9 Video board: YC13, YC14
F15X	An error is detected at the authentication device control section	1) Check connection of the harness (Authentication device - Main board) and connectors and check function. 2) Format the HDD and check function. (U024 FULL formatting) (*1) 3) Execute the U021 Memory initializing to initialize the controller backup memory and check function. 4) Replace the main board and check function. 5) Replace the HDD and check function. (*1) 6) Retrieve the USBLOG and contact the Service Administrative Division. (*1) For the HDD standard model only.	Authentication device: Card Reader, etc.	
F16X	An error is detected at the KMAS control section	1) Check connection of the harness (KMAS - Main board) and connectors and check function. 2) Format the HDD and check function. (U024 FULL formatting) (*1) 3) Execute the U021 Memory initializing to initialize the controller backup memory and check function. 3) Replace the main board and check function. 4) Replace the HDD and check function. (*1) 5) Retrieve the USBLOG and contact the Service Administrative Division. (*1) For the HDD standard model only.		[KMAS Interface] Main board: YC7

No.	Content	Check procedure & check point	Remark 1	TASKalfa 2550ci
F17X	An error is detected at the print data control section	1) Format the HDD and check function. (U024 FULL formatting) (*1) 2) Execute the U021 Memory initializing to initialize the controller backup memory and check function. 3) Replace the main board and check function. 4) Replace the HDD and check function. (*1) 5) Retrieve the USBLOG and contact the Service Administrative Division. (*1) For the HDD standard model only.		
F18X	An error is detected at the Video control secion	1) Check connection of the harness (Engine - Main board) and connectors and check function. 2) Format the HDD and check function. (U024 FULL formatting) (*1) 3) Execute the U021 Memory initializing to initialize the controller backup memory and check function. 4) Replace the engine board and check function. 5) Replace the main board and check function. 6) Retrieve the USBLOG and contact the Service Administrative Division. (*1) For the HDD standard model only.		[Main - Video Interface] Main board:YC3 Video board: YC1 [Video - Engine Interface] Video board: YC3 Engine board:YC26
F19X F1AX	An error is detected at the OS or some of device drivers	1) Format the HDD and check function. (U024 FULL formatting) (*1) 2) Execute the U021 Memory initializing to initialize the controller backup memory and check function. 3) Replace the main board and check function. 4) Replace the HDD and check function. (*1) 5) Retrieve the USBLOG and contact the Service Administrative Division. (*1) For the HDD standard model only.		
F1BX	An error is detected at the Security management section	1) Format the HDD and check function. (U024 FULL formatting) (*1) 2) Execute the U021 Memory initializing to initialize the controller backup memory and check function. 3) Replace the main board and check function. 4) Replace the HDD and check function. (*1) 5) Retrieve the USBLOG and contact the Service Administrative Division. (*1) For the HDD standard model only.		
F1CX	An error is detected at the File System management section	1) Format the HDD and check function. (U024 FULL formatting) (*1) 2) Execute the U021 Memory initializing to initialize the controller backup memory and check function. 3) Replace the main board and check function. 4) Replace the HDD and check function. (*1) 5) Retrieve the USBLOG and contact the Service Administrative Division. (*1) For the HDD standard model only.	*The F1C4 error appears with the HDD security kit at work.	

No.	Content	Check procedure & check point	Remark 1	TASKalfa 2550ci
F1DX	An error is detected at the Image memory management section	1) Format the HDD and check function. (U024 FULL formatting) (*1) 2) Execute the U021 Memory initializing to initialize the controller backup memory and check function. 3) Replace the main board and check function. 4) Replace the HDD and check function. (*1) 5) Retrieve the USBLOG and contact the Service Administrative Division. (*1) For the HDD standard model only.	*The F1D4 error is RAM allocation error. 1. Check it with the U340 2. Initialize the setting valued with the U021	
F1EX F1FX F20X	An error is detected at the OS or some of device drivers	1) Format the HDD and check function. (U024 FULL formatting) (*1) 2) Execute the U021 Memory initializing to initialize the controller backup memory and check function. 3) Replace the main board and check function. 4) Replace the HDD and check function. (*1) 5) Retrieve the USBLOG and contact the Service Administrative Division. (*1) For the HDD standard model only.		
F21X F22X F23X	An error is detected at the Image processing section	1) Check contact of the DDR memory and check function. 2) Format the HDD and check function. (U024 FULL formatting) (*1) 3) Execute the U021 Memory initializing to initialize the controller backup memory and check function. 4) Replace the main board and check function. 5) Replace the HDD and check function. (*1) 6) Retrieve the USBLOG and contact the Service Administrative Division. (*1) For the HDD standard model only.		[DDR2 memory contact check] Main board:YS1 A certain part of the memory may be faulty. The frequency of faiure occurrence is dependent on the frequency of access to the faulty bit. The ASIC may be faulty if the memory is not sensitive.
F24X	An error is detected at the System management section	1) Check contact of the DDR memory and check function. 2) Format the HDD and check function. (U024 FULL formatting) (*1) 3) Execute the U021 Memory initializing to initialize the controller backup memory and check function. 4) Replace the main board and check function. 5) Replace the HDD and check function. (*1) 6) Retrieve the USBLOG and contact the Service Administrative Division. (*1) For the HDD standard model only.	*The F248 eror is printer process error. if it repeats with a certain print data, retrieve the capture data and USBLOG.	[DDR2 memory contact check] Main board:YS1 A certain part of the memory may be faulty. The frequency of failure occurrence is dependent on the frequency of access to the faulty bit. The ASIC may be faulty if the memory is not sensitive.
F25X	An error is detected at the Network management section	1) Format the HDD and check function. (U024 FULL formatting) (*1) 2) Execute the U021 Memory initializing to initialize the controller backup memory and check function. 3) Replace the main board and check function. 4) Retrieve the USBLOG and contact the Service Administratuve Division. (or retrieve the packet capture data depending on the reult of analysis) (*1) For the HDD standard model only.	*This may be owing to the users network environment.	
F26X F27X F28X F29X F2AX	An error is detected at the System management section	1) Format the HDD and check function. (U024 FULL formatting) (*1) 2) Execute the U021 Memory initializing to initialize the controller backup memory and check function. 3) Replace the main board and check function. 4) Replace the HDD and check function. (*1) 5) Retrieve the USBLOG and contact the Service Administrative Division. (*1) For the HDD standard model only.		

No.	Content	Check procedure & check point	Remark 1	TASKalfa 2550ci
F2BX F2CX F2DX F2EX F2FX F30X F31X F32X	An error is detected at the Network control section	1) Format the HDD and check function. (U024 FULL formatting) (*1) 2) Execute the U021 Memory initializing to initialize the controller backup memory and check function. 3) Replace the main board and check function. 4) Retrieve the USBLOG and contact the Service Administratuve Division. (or retrieve the packet capture data depending on the reult of analysis) (*1) For the HDD standard model only.		
F33X	An error is detected at the Scan management section	1) Check connection of the harness (Scan/DP board - main board) and connectors and check function. 2) Format the HDD and check function. (U024 FULL formatting) (*1) 3) Execute the U021 Memory initializing to initialize the controller backup memory and check function. 4) Replace the Scan/DP board and check function. 5) Replace the main board and check function. 6) Retrieve the USBLOG and contact the Service Administrative Division. (*1) For the HDD standard model only.		
F34X	An error is detected at the Panel management section	1) Check connection of the harness (Panel board - main board) and connectors and check function. 2) Format the HDD and check function. (U024 FULL formatting) (*1) 3) Execute the U021 Memory initializing to initialize the controller backup memory and check function. 4) Replace the panel board and check function. (*2) 5) Replace the main board and check function. 6) Retrieve the USBLOG and contact the Service Administrative Division. (*1) For the HDD standard model only. (*2) For the models separating the panel/main PWBs.		
F35X	An error is detected at the Print control section	1) Format the HDD and check function. (U024 FULL formatting) (*1) 2) Execute the U021 Memory initializing to initialize the controller backup memory and check function. 3) Replace the main board and check function. 4) Replace the HDD and check function. (*1) 5) Retrieve the USBLOG and contact the Service Administrative Division. (*1) For the HDD standard model only.		
F36X	An error is detected at the Print management section	1) Format the HDD and check function. (U024 FULL formatting) (*1) 2) Execute the U021 Memory initializing to initialize the controller backup memory and check function. 3) Replace the main board and check function. 4) Replace the HDD and check function. (*1) 5) Retrieve the USBLOG and contact the Service Administrative Division. (*1) For the HDD standard model only.		

No.	Content	Check procedure & check point	Remark 1	TASKalfa 2550ci
F37X	An error is detected at the FAX management section	1) Format the HDD and check function. (U024 FULL formatting) (*1) 2) Execute the U021 Memory initializing to initialize the controller backup memory and check function. 3) Execute the U671 Clear FAX back up data (FAX DIMM clear) and check function. (*3) (Take cae of the received data since it is cleared) 4) Replace the FAX_DIMM and check function. 5) Replace the main board and check function. 6) Replace the HDD and check function. (*1) 7) Retrieve the USBLOG and contact the Service Administrative Division. (*1) For the HDD standard model only. (*3) For the models using the main PWB with the flash for the FAX data.		F14A,F14F:KUIO error Main board (USB hub) [Main-KUIO Interface] Main board: YC8,YC9 Video board: YC13,YC14
F38X	An error is detected at the Authentication/permit management section	1) Format the HDD and check function. (U024 FULL formatting) (*1) 2) Execute the U021 Memory initializing to initialize the controller backup memory and check function. 3) Replace the main board and check function. 4) Replace the HDD and check function. (*1) 5) Retrieve the USBLOG and contact the Service Administrative Division. (*1) For the HDD standard model only.		
F39X	An error is detected at the KMAS control section	1) Check connection of the harness (KMAS - Main board) and connectors and check function. 2) Format the HDD and check function. (U024 FULL formatting) (*1) 3) Execute the U021 Memory initializing to initialize the controller backup memory and check function. 3) Replace the main board and check function. 4) Replace the HDD and check function. (*1) 5) Retrieve the USBLOG and contact the Service Administrative Division. (*1) For the HDD standard model only.		[KMAS Interface] Main board: YC7
F3AX F3BX F3CX F3DX F3EX F3FX F40X F41X F42X F43X F44X F45X	An error is detected at the Entity management section	1) Format the HDD and check function. (U024 FULL formatting) (*1) 2) Execute the U021 Memory initializing to initialize the controller backup memory and check function. 3) Replace the main board and check function. 4) Replace the HDD and check function. (*1) 5) Retrieve the USBLOG and contact the Service Administrative Division. (*1) For the HDD standard model only.		
F46X	An error is detected at the Print image process section	1) Replace the main board and check function. 2) Retrieve the USBLOG (or retrieve the print capture data by case)	*The F46F is printer process error. If it repeats with a certain print data, retrieve the capture data and USBLOG.	

No.	Content	Check procedure & check point	Remark 1	TASKalfa 2550ci
F47X F48X F49X	An error is detected at the Image edit process control section	1) Format the HDD and check function. (U024 FULL formatting) (*1) 2) Execute the U021 Memory initializing to initialize the controller backup memory and check function. 3) Replace the main board and check function. 4) Replace the HDD and check function. (*1) 5) Retrieve the USBLOG and contact the Service Administrative Division. (*1) For the HDD standard model only.		
F4AX F4CX	An error is detected at the Print image process section	1) Format the HDD and check function. (U024 FULL formatting) (*1) 2) Execute the U021 Memory initializing to initialize the controller backup memory and check function. 3) Replace the main board and check function. 4) Replace the HDD and check function. (*1) 5) Retrieve the USBLOG and contact the Service Administrative Division. (*1) For the HDD standard model only.		
F4DX F4EX	An error is detected at the Entity control section	1) Format the HDD and check function. (U024 FULL formatting) (*1) 2) Execute the U021 Memory initializing to initialize the controller backup memory and check function. 3) Replace the main board and check function. 4) Replace the HDD and check function. (*1) 5) Retrieve the USBLOG and contact the Service Administrative Division. (*1) For the HDD standard model only.		
F4FX	An error is detected at the Job control section	1) Format the HDD and check function. (U024 FULL formatting) (*1) 2) Execute the U021 Memory initializing to initialize the controller backup memory and check function. 3) Replace the main board and check function. 4) Replace the HDD and check function. (*1) 5) Retrieve the USBLOG and contact the Service Administrative Division. (*1) For the HDD standard model only.		
F50X	An error is detected at the FAX control section	1) Format the HDD and check function. (U024 FULL formatting) (*1) 2) Execute the U021 Memory initializing to initialize the controller backup memory and check function. 3) Replace the main board and check function. 4) Replace the HDD and check function. (*1) 5) Retrieve the USBLOG and contact the Service Administrative Division. (*1) For the HDD standard model only.		
F51X F52X F53X F55X F56X F57X	An error is detected at the Job execution section	1) Format the HDD and check function. (U024 FULL formatting) (*1) 2) Execute the U021 Memory initializing to initialize the controller backup memory and check function. 3) Replace the main board and check function. 4) Replace the HDD and check function. (*1) 5) Retrieve the USBLOG and contact the Service Administrative Division. (*1) For the HDD standard model only.		

No.	Content	Check procedure & check point	Remark 1	TASKalfa 2550ci
F58X F59X F5AX F5BX F5CX F5DX F5EX	An error is detected at the Service management section	1) Format the HDD and check function. (U024 FULL formatting) (*1) 2) Execute the U021 Memory initializing to initialize the controller backup memory and check function. 3) Replace the main board and check function. 4) Replace the HDD and check function. (*1) 5) Retrieve the USBLOG and contact the Service Administrative Division. (*1) For the HDD standard model only.		
F5FX	An error is detected at the Service execution section	1) Format the HDD and check function. (U024 FULL formatting) (*1) 2) Execute the U021 Memory initializing to initialize the controller backup memory and check function. 3) Replace the main board and check function. 4) Replace the HDD and check function. (*1) 5) Retrieve the USBLOG and contact the Service Administrative Division. (*1) For the HDD standard model only.		
F60X	An error is detected at the Maintenance mode management section	1) Format the HDD and check function. (U024 FULL formatting) (*1) 2) Execute the U021 Memory initializing to initialize the controller backup memory and check function. 3) Replace the main board and check function. 4) Replace the HDD and check function. (*1) 5) Retrieve the USBLOG and contact the Service Administrative Division. (*1) For the HDD standard model only.		
F61X	An error is detected at the Report compiling section	1) Format the HDD and check function. (U024 FULL formatting) (*1) 2) Execute the U021 Memory initializing to initialize the controller backup memory and check function. 3) Replace the main board and check function. 4) Replace the HDD and check function. (*1) 5) Retrieve the USBLOG and contact the Service Administrative Division. (*1) For the HDD standard model only.		
F62X	An error is detected at the Service execution section	1) Format the HDD and check function. (U024 FULL formatting) (*1) 2) Execute the U021 Memory initializing to initialize the controller backup memory and check function. 3) Replace the main board and check function. 4) Replace the HDD and check function. (*1) 5) Retrieve the USBLOG and contact the Service Administrative Division. (*1) For the HDD standard model only.		
F63X	An error is detected at the Device control section	1) Format the HDD and check function. (U024 FULL formatting) (*1) 2) Execute the U021 Memory initializing to initialize the controller backup memory and check function. 3) Replace the main board and check function. 4) Replace the HDD and check function. (*1) 5) Retrieve the USBLOG and contact the Service Administrative Division. (*1) For the HDD standard model only.		

No.	Content	Check procedure & check point	Remark 1	TASKalfa 2550ci
F64X F65X F66X F67X	An error is detected at the Print image process section	1) Format the HDD and check function. (U024 FULL formatting) (*1) 2) Execute the U021 Memory initializing to initialize the controller backup memory and check function. 3) Replace the main board and check function. 4) Replace the HDD and check function. (*1) 5) Retrieve the USBLOG and contact the Service Administrative Division. (*1) For the HDD standard model only.		
F68X	An error is detected at the Storage device control section	1) Format the HDD and check function. (U024 FULL formatting) (*1) 2) Execute the U021 Memory initializing to initialize the controller backup memory and check function. 3) Replace the main board and check function. 4) Replace the HDD and check function. (*1) 5) Retrieve the USBLOG and contact the Service Administrative Division. (*1) For the HDD standard model only.	*F684 is overwrite error with the HDD security kit	
F69X F6AX F6BX F6CX	An error is detected at the HyPAS control section	1) Format the HDD and check function. (U024 FULL formatting) (*1) 2) Execute the U021 Memory initializing to initialize the controller backup memory and check function. 3) Replace the main board and check function. 4) Replace the HDD and check function. (*1) 5) Retrieve the USBLOG and contact the Service Administrative Division. (*1) For the HDD standard model only.		
F6DX F6EX F6FX F70X F71X F72X F73X F74X F75X	An error is detected at the External Server management section	1) Check the external server and check function. 2) Chekc the connection to the external server and check function. 3) Check the network settings and check function. 4) Replace the bridge board and check function. 5) Replace the main board and check function. 6) Retrieve the USBLOG and contact the Service Administrative Division.	*FieryOption related	---

(5) Chart of image adjustment procedures

Adjusting order	Item	Image	Description	Maintenance mode		Original	Page	Remarks
				Item No.	Mode			
1	Adjusting the magnification in the main scanning direction (printing adjustment)	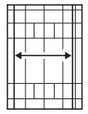	Polygon motor speed adjustment	U053	POLYGON	U053 test pattern	P.1-3-40	
2	Adjusting the magnification in the auxiliary scanning direction (printing adjustment)	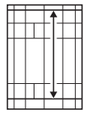	Drive motor speed adjustment	U053	MAIN	U053 test pattern	P.1-3-40	
3	Adjusting the center line of the MP tray (printing adjustment)	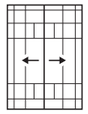	Adjusting the LSU print start timing	U034	LSU OUT LEFT /MPT LSU OUT LEFT / DUPLEX	U034 test pattern	P.1-3-35	To make an adjustment for duplex copying, select LSU OUT LEFT /DUPLEX.
4	Adjusting the center line of the cassettes (printing adjustment)	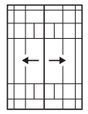	Adjusting the LSU print start timing	U034	LSU OUT LEFT / CASSETTE 1, CASSETTE 2, CASSETTE 3, CASSETTE 4	U034 test pattern	P.1-3-35	Cassette 1: select LSU OUT LEFT /CASSETTE1 Cassette 2: select LSU OUT LEFT /CASSETTE2 Cassette 3: select LSU OUT LEFT /CASSETTE3 Cassette 3: select LSU OUT LEFT /CASSETTE4
5	Adjusting the leading edge registration of the MP tray (printing adjustment)	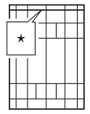	Registration motor turning on timing (secondary paper feed start timing)	U034	LSU OUT TOP /MPT LSU OUT TOP / DUPLEX	U034 test pattern	P.1-3-35	To make an adjustment for duplex copying, select LSU OUT TOP /DUPLEX. PAPER WIDTH 218mm or more
6	Adjusting the leading edge registration of the cassette (printing adjustment)	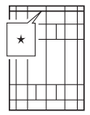	Registration motor turning on timing (secondary paper feed start timing)	U034	LSU OUT TOP / CASSETTE	U034 test pattern	P.1-3-35	PAPER WIDTH 218mm or more
7	Adjusting the leading edge margin (printing adjustment)	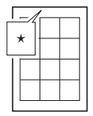	LSU illumination start timing	U402	LESD	U402 test pattern	P.1-3-105	
8	Adjusting the trailing edge margin (printing adjustment)	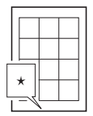	LSU illumination end timing	U402	TRAIL	U402 test pattern	P.1-3-105	
9	Adjusting the left and right margins (printing adjustment)	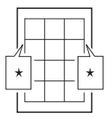	LSU illumination start/end timing	U402	A MARGIN C MARGIN	U402 test pattern	P.1-3-105	
10	Adjusting magnification of the scanner in the main scanning direction (scanning adjustment)	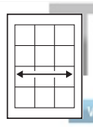	Data processing	U065	MAIN SCAN	Test chart	P.1-3-42	

Adjusting order	Item	Image	Description	Maintenance mode		Original	Page	Remarks
				Item No.	Mode			
11	Adjusting magnification of the scanner in the auxiliary scanning direction (scanning adjustment)	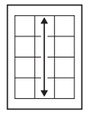	Original scanning speed	U065 U070	SUB SCAN SUB SCAN (F) SUB SCAN (B)	Test chart	P.1-3-42 P.1-3-47	U065: For copying an original placed on the platen. U070: For copying originals from the DP. To make an adjustment for second side: select SUB SCAN(B)
12	Adjusting the center line (scanning adjustment)	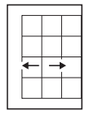	Adjusting the original scan data (image adjustment)	U067 U072	FRONT ROTATE FRONT BACK	Test chart	P.1-3-45 P.1-3-50	U067: For copying an original placed on the platen. To make an adjustment for rotate copying, select ROTATE. U072: For copying originals from the DP. To make an adjustment for duplex copying, select BACK.
13	Adjusting the leading edge registration (scanning adjustment)	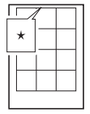	Original scan start timing	U066 U071	FRONT ROTATE FRONT HEAD BACK HEAD	Test chart	P.1-3-44 P.1-3-48	U066: For copying an original placed on the platen. To make an adjustment for rotate copying, select ROTATE. U071: For copying originals from the DP. To make an adjustment for duplex copying, select BACK HEAD.
14	Adjusting the leading edge margin (scanning adjustment)	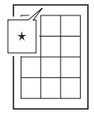	Adjusting the original scan data (image adjustment)	U403 U404	B MARGIN B MARGIN	Test chart	P.1-3-106 P.1-3-107	U403: For copying an original placed on the contact glass U404: For copying originals from the DP.
15	Adjusting the trailing edge margin (scanning adjustment)	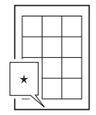	Adjusting the original scan data (image adjustment)	U403 U404	D MARGIN D MARGIN	Test chart	P.1-3-106 P.1-3-107	U403: For copying an original placed on the contact glass U404: For copying originals from the DP.
16	Adjusting the left and right margins (scanning adjustment)	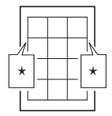	Adjusting the original scan data (image adjustment)	U403 U404	A MARGIN C MARGIN A MARGIN C MARGIN	Test chart	P.1-3-106 P.1-3-107	U403: For copying an original placed on the contact glass U404: For copying originals from the DP.

When maintenance item U411 (Automatic adjustment in the scanner) is run using the specified original (P/N 7505000005) the following adjustments are automatically made:
Adjusting the scanner magnification (U065)
Adjusting the scanner leading edge registration (U066)
Adjusting the scanner center line (U067)

When maintenance item U411 (Automatic adjustment in the DP) is run using the specified original (P/N 7505000005) the following adjustments are automatically made:
* : When running this test chart, you first must clean the feed rollers with alcohol and ensure the DP width guides are correctly positioned against the original.
Adjusting the DP magnification (U070)
Adjusting the DP leading edge registration (U071)
Adjusting the DP center line (U072)

Image quality

Item	Specifications
100% magnification	Machine: ±0.8% Using DP: ±1.5%
Enlargement/reduction	Machine: ±1.0% Using DP: ±1.5%
Lateral squareness	Machine: ±1.5 mm/375 mm Using DP: ±3.0 mm/375 mm
Leading edge registration	Cassette: ±2.5 mm MP tray: ±2.5 mm Duplex: ±2.5 mm
Skewed paper feed (left-right difference)	Cassette: 1.5 mm or less MP tray: 1.5 mm or less Duplex: 2.0 mm or less
Lateral image shifting	Cassette: ±2.0 mm MP tray: ±2.0 mm Duplex: ±3.0 mm

(6) Wiring diagram

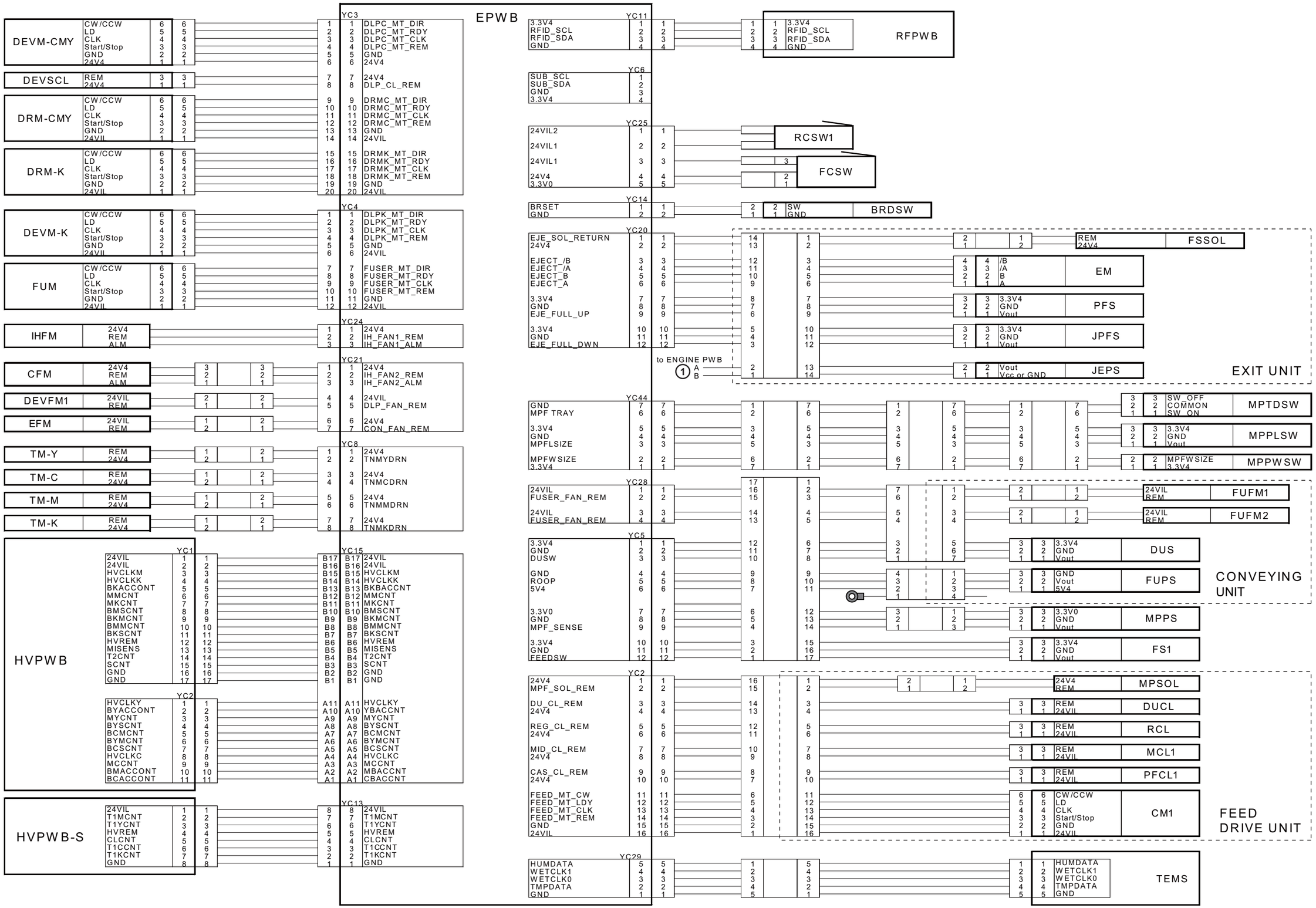

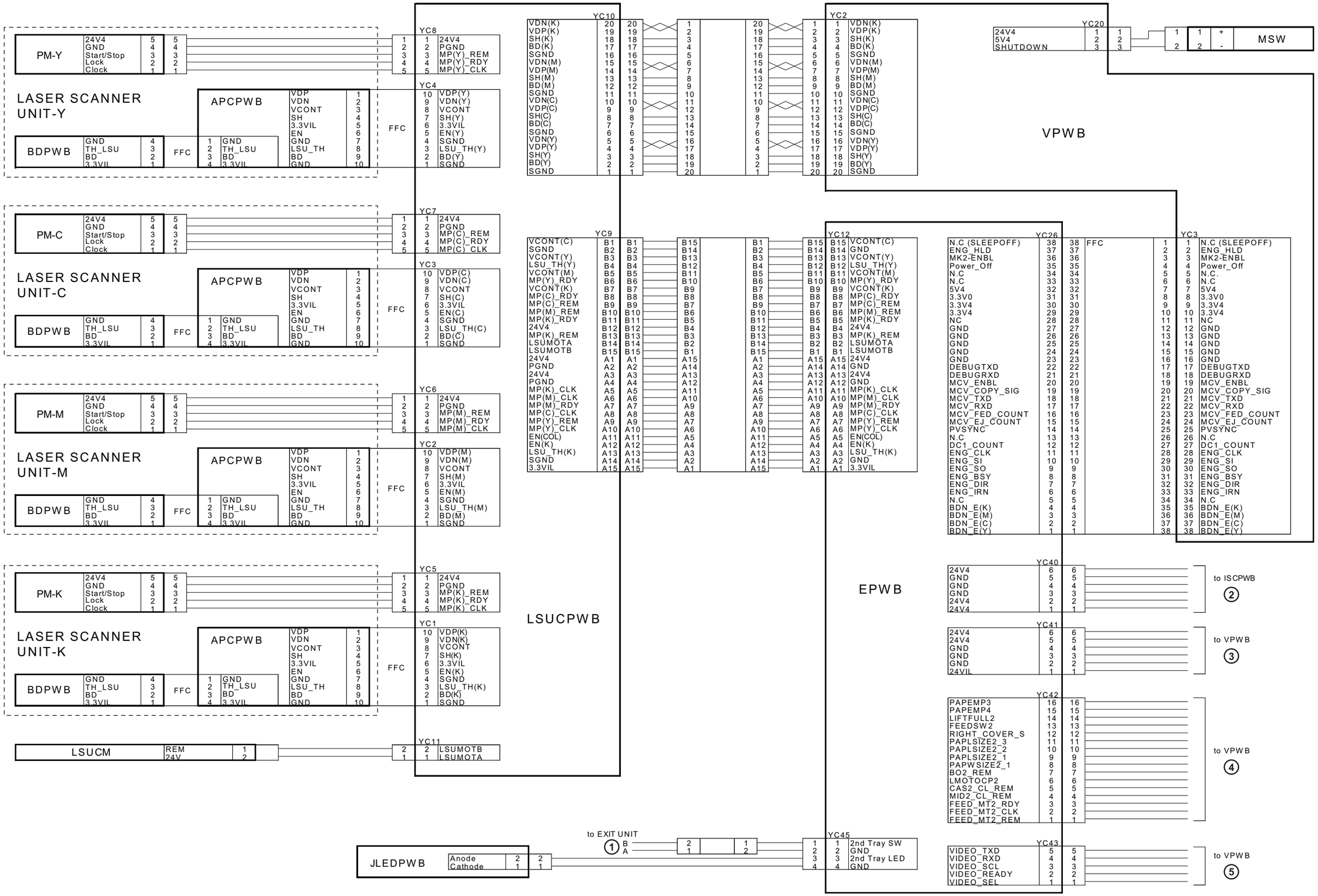
PM-Y
24V4
GND
Start/Stop
Lock
Clock
LASER SCANNER UNIT-Y
APCPWB
BDPWB
GND
TH_LSU
BD
3.3VIL
FFC
VDP
VDN
VCONT
SH
EN
LSU_TH
YC8
YC4
PM-C
LASER SCANNER UNIT-C
YC7
YC3
PM-M
LASER SCANNER UNIT-M
YC6
YC2
PM-K
LASER SCANNER UNIT-K
YC5
YC1
LSUCM
REM
24V
YC11
LSUMOTB
LSUMOTA
LSUCPWB
YC10
YC9
VPWB
YC20
SHUTDOWN
MSW
YC12
YC26
YC3
EPWB
YC40
YC41
YC42
YC43
YC45
to ISCPWB
to VPWB
JLEDPWB
Anode
Cathode
to EXIT UNIT
2nd Tray SW
2nd Tray LED

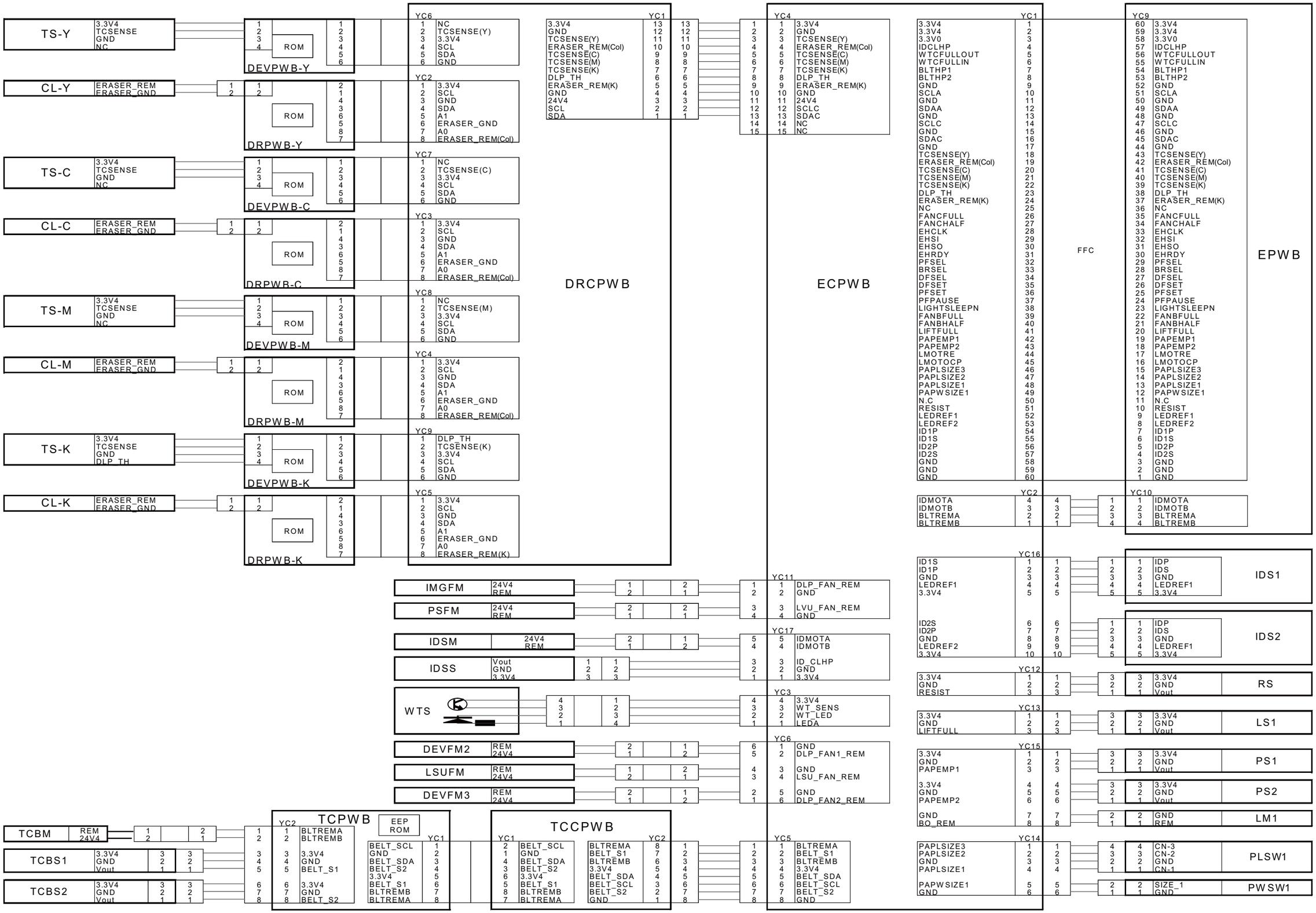
TS-Y
3.3V4
TCSENSE
GND
NC
DEVPWB-Y
CL-Y
ERASER_REM
ERASER_GND
DRPWB-Y
TS-C
DEVPWB-C
CL-C
DRPWB-C
TS-M
DEVPWB-M
CL-M
DRPWB-M
TS-K
DLP_TH
DEVPWB-K
CL-K
DRPWB-K
ROM
YC6
YC2
YC7
YC3
YC8
YC4
YC9
YC5
DRCPWB
YC1
3.3V4
GND
TCSENSE(Y)
ERASER_REM(Col)
TCSENSE(C)
TCSENSE(M)
TCSENSE(K)
DLP_TH
ERASER_REM(K)
24V4
SCL
SDA
YC4
ECPWB
FFC
EPWB
IDMOTA
IDMOTB
BLTREMA
BLTREMB
YC10
IMGFM
PSFM
IDSM
IDSS
Vout
WTS
DEVFM2
LSUFM
DEVFM3
YC11
DLP_FAN_REM
LVU_FAN_REM
YC17
ID_CLHP
YC3
WT_SENS
WT_LED
LEDA
YC6
DLP_FAN1_REM
LSU_FAN_REM
DLP_FAN2_REM
YC5
YC16
ID1S
ID1P
LEDREF1
ID2S
ID2P
LEDREF2
IDP
IDS
IDS1
IDS2
YC12
RESIST
RS
YC13
LIFTFULL
LS1
YC15
PAPEMP1
PAPEMP2
PS1
PS2
LM1
YC14
PAPLSIZE3
PAPLSIZE2
PAPLSIZE1
PAPWSIZE1
CN-3
CN-2
CN-1
PLSW1
SIZE_1
PWSW1
TCBM
REM
TCBS1
TCBS2
TCPWB
EEP ROM
BELT_SCL
BELT_SDA
BELT_S1
BELT_S2
TCCPWB

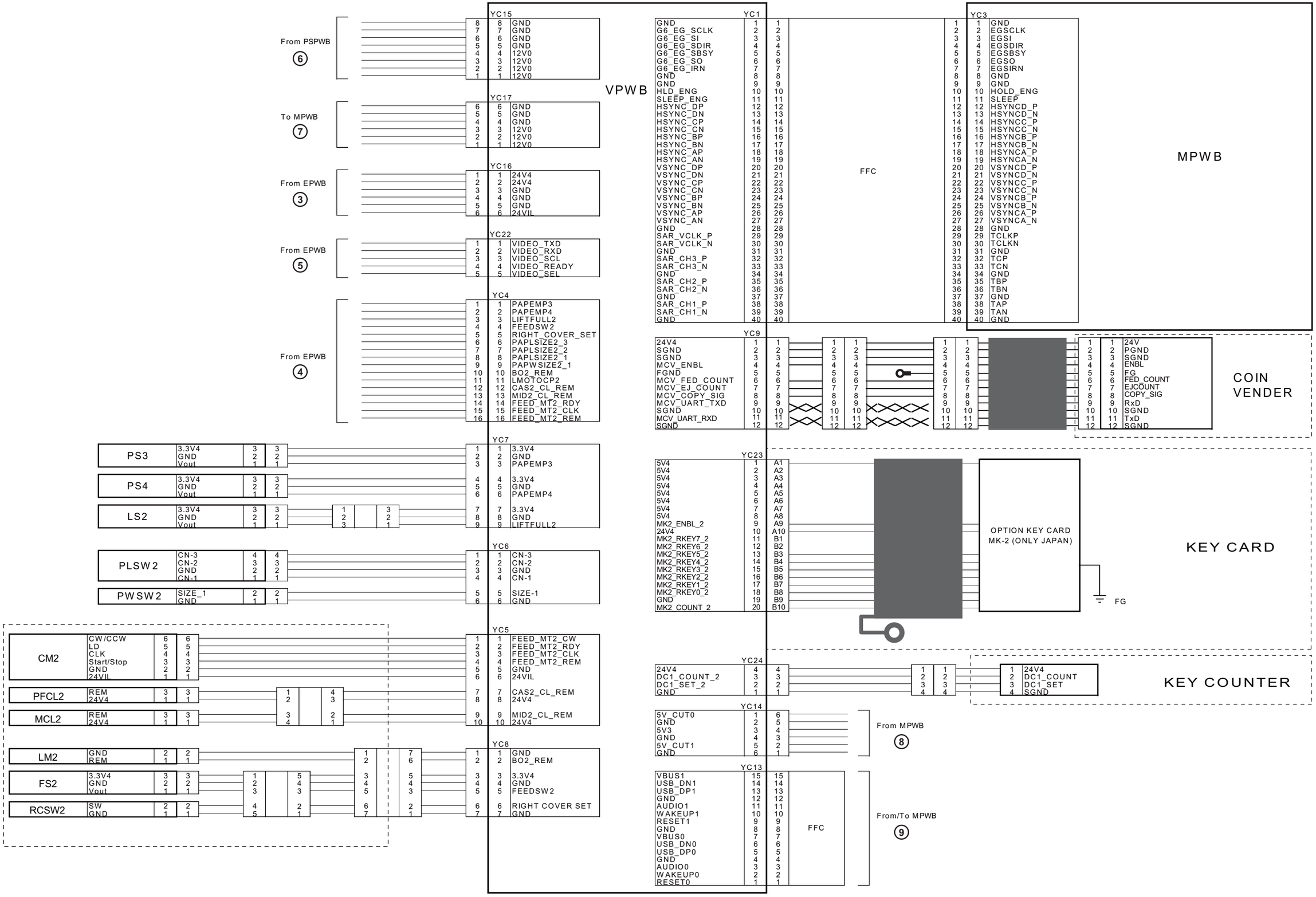
VPWB
MPWB
From PSPWB
6
To MPWB
7
From EPWB
3
From EPWB
5
From EPWB
4
YC15
8 GND
7 GND
6 GND
5 GND
4 12V0
3 12V0
2 12V0
1 12V0
YC17
6 GND
5 GND
4 GND
3 12V0
2 12V0
1 12V0
YC16
1 24V4
2 24V4
3 GND
4 GND
5 GND
6 24VIL
YC22
1 VIDEO_TXD
2 VIDEO_RXD
3 VIDEO_SCL
4 VIDEO_READY
5 VIDEO_SEL
YC4
1 PAPEMP3
2 PAPEMP4
3 LIFTFULL2
4 FEEDSW2
5 RIGHT_COVER_SET
6 PAPLSIZE2_3
7 PAPLSIZE2_2
8 PAPLSIZE2_1
9 PAPWSIZE2_1
10 BO2_REM
11 LMOTOCP2
12 CAS2_CL_REM
13 MID2_CL_REM
14 FEED_MT2_RDY
15 FEED_MT2_CLK
16 FEED_MT2_REM
YC7
1 3.3V4
2 GND
3 PAPEMP3
4 3.3V4
5 GND
6 PAPEMP4
7 3.3V4
8 GND
9 LIFTFULL2
PS3
3.3V4 GND Vout
PS4
3.3V4 GND Vout
LS2
3.3V4 GND Vout
YC6
1 CN-3
2 CN-2
3 GND
4 CN-1
5 SIZE-1
6 GND
PLSW2
CN-3 CN-2 GND CN-1
PWSW2
SIZE_1 GND
YC5
1 FEED_MT2_CW
2 FEED_MT2_RDY
3 FEED_MT2_CLK
4 FEED_MT2_REM
5 GND
6 24VIL
7 CAS2_CL_REM
8 24V4
9 MID2_CL_REM
10 24V4
CM2
CW/CCW LD CLK Start/Stop GND 24VIL
PFCL2
REM 24V4
MCL2
REM 24V4
YC8
1 GND
2 BO2_REM
3 3.3V4
4 GND
5 FEEDSW2
6 RIGHT COVER SET
7 GND
LM2
GND REM
FS2
3.3V4 GND Vout
RCSW2
SW GND
YC1
1 GND
2 G6_EG_SCLK
3 G6_EG_SI
4 G6_EG_SDIR
5 G6_EG_SBSY
6 G6_EG_SO
7 G6_EG_IRN
8 GND
9 GND
10 HLD_ENG
11 SLEEP_ENG
12 HSYNC_DP
13 HSYNC_DN
14 HSYNC_CP
15 HSYNC_CN
16 HSYNC_BP
17 HSYNC_BN
18 HSYNC_AP
19 HSYNC_AN
20 VSYNC_DP
21 VSYNC_DN
22 VSYNC_CP
23 VSYNC_CN
24 VSYNC_BP
25 VSYNC_BN
26 VSYNC_AP
27 VSYNC_AN
28 GND
29 SAR_VCLK_P
30 SAR_VCLK_N
31 GND
32 SAR_CH3_P
33 SAR_CH3_N
34 GND
35 SAR_CH2_P
36 SAR_CH2_N
37 GND
38 SAR_CH1_P
39 SAR_CH1_N
40 GND
FFC
YC3
1 GND
2 EGSCLK
3 EGSI
4 EGSDIR
5 EGSBSY
6 EGSO
7 EGSIRN
8 GND
9 GND
10 HOLD_ENG
11 SLEEP
12 HSYNCD_P
13 HSYNCD_N
14 HSYNCC_P
15 HSYNCC_N
16 HSYNCB_P
17 HSYNCB_N
18 HSYNCA_P
19 HSYNCA_N
20 VSYNCD_P
21 VSYNCD_N
22 VSYNCC_P
23 VSYNCC_N
24 VSYNCB_P
25 VSYNCB_N
26 VSYNCA_P
27 VSYNCA_N
28 GND
29 TCLKP
30 TCLKN
31 GND
32 TCP
33 TCN
34 GND
35 TBP
36 TBN
37 GND
38 TAP
39 TAN
40 GND
YC9
24V4 SGND SGND MCV_ENBL FGND MCV_FED_COUNT MCV_EJ_COUNT MCV_COPY_SIG MCV_UART_TXD SGND MCV_UART_RXD SGND
1 24V
2 PGND
3 SGND
4 ENBL
5 FG
6 FED_COUNT
7 EJCOUNT
8 COPY_SIG
9 RxD
10 SGND
11 TxD
12 SGND
COIN VENDER
YC23
5V4 5V4 5V4 5V4 5V4 5V4 5V4 5V4 MK2_ENBL_2 24V4 MK2_RKEY7_2 MK2_RKEY6_2 MK2_RKEY5_2 MK2_RKEY4_2 MK2_RKEY3_2 MK2_RKEY2_2 MK2_RKEY1_2 MK2_RKEY0_2 GND MK2_COUNT_2
A1 A2 A3 A4 A5 A6 A7 A8 A9 A10 B1 B2 B3 B4 B5 B6 B7 B8 B9 B10
OPTION KEY CARD
MK-2 (ONLY JAPAN)
FG
KEY CARD
YC24
24V4 DC1_COUNT_2 DC1_SET_2 GND
1 24V4
2 DC1_COUNT
3 DC1_SET
4 SGND
KEY COUNTER
YC14
5V_CUT0 GND 5V3 GND 5V_CUT1 GND
From MPWB
8
YC13
VBUS1 USB_DN1 USB_DP1 GND AUDIO1 WAKEUP1 RESET1 GND VBUS0 USB_DN0 USB_DP0 GND AUDIO0 WAKEUP0 RESET0
FFC
From/To MPWB
9

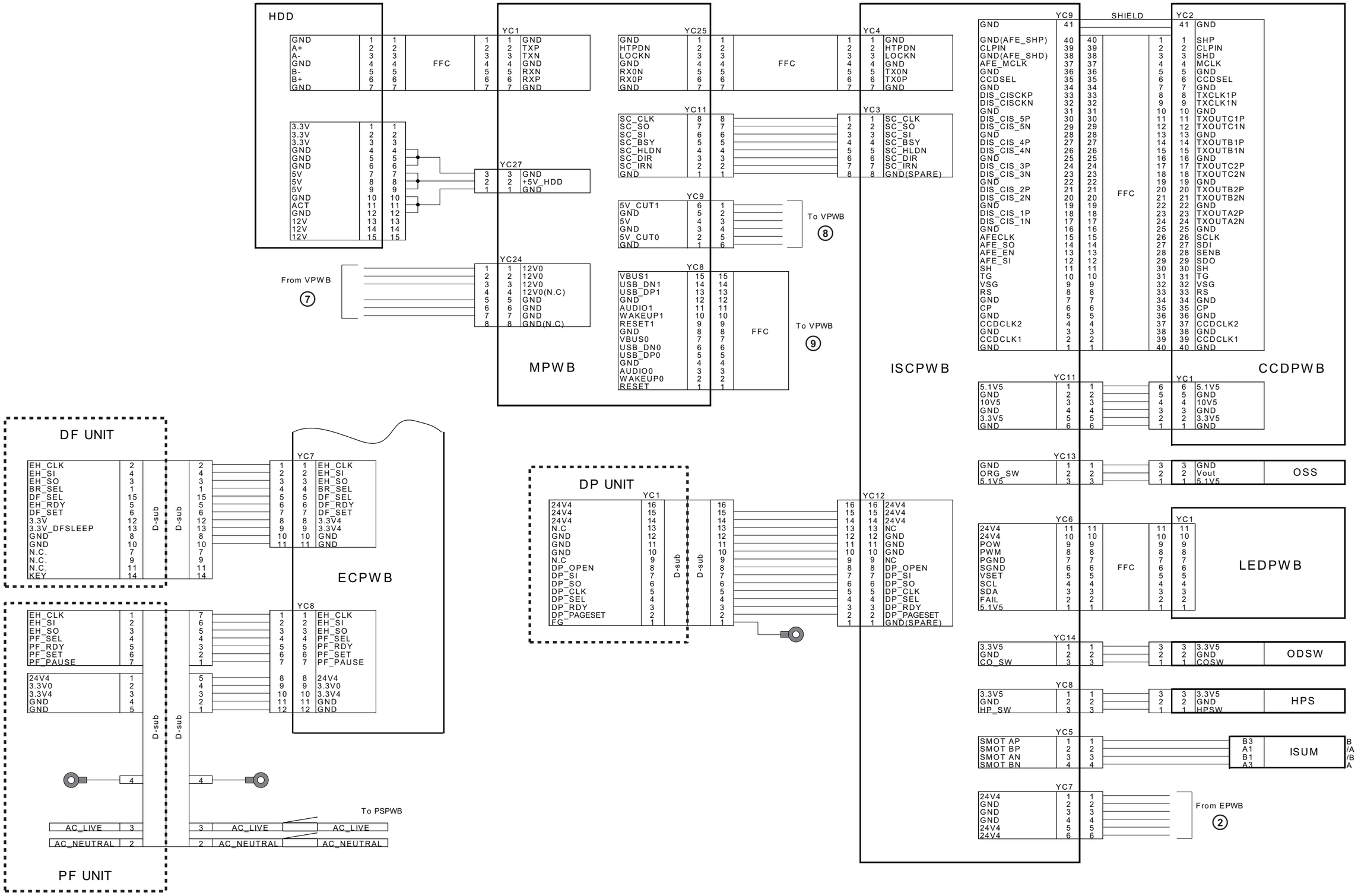
HDD
GND 1 1
A+ 2 2
A- 3 3
GND 4 4
B- 5 5
B+ 6 6
GND 7 7
FFC
YC1
1 GND
2 TXP
3 TXN
4 GND
5 RXN
6 RXP
7 GND
3.3V 1 1
3.3V 2 2
3.3V 3 3
GND 4 4
GND 5 5
GND 6 6
5V 7 7
5V 8 8
5V 9 9
GND 10 10
ACT 11 11
GND 12 12
12V 13 13
12V 14 14
12V 15 15
YC27
3 GND
2 +5V_HDD
1 GND
From VPWB
7
YC24
1 12V0
2 12V0
3 12V0
4 12V0(N.C)
5 GND
6 GND
7 GND
8 GND(N.C)
MPWB
YC25
GND 1 1
HTPDN 2 2
LOCKN 3 3
GND 4 4
RX0N 5 5
RX0P 6 6
GND 7 7
FFC
YC4
1 GND
2 HTPDN
3 LOCKN
4 GND
5 TX0N
6 TX0P
7 GND
YC11
SC_CLK 8 8
SC_SO 7 7
SC_SI 6 6
SC_BSY 5 5
SC_HLDN 4 4
SC_DIR 3 3
SC_IRN 2 2
GND 1 1
YC3
1 SC_CLK
2 SC_SO
3 SC_SI
4 SC_BSY
5 SC_HLDN
6 SC_DIR
7 SC_IRN
8 GND(SPARE)
YC9
5V_CUT1 6 1
GND 5 2
5V 4 3
GND 3 4
5V_CUT0 2 5
GND 1 6
To VPWB
8
YC8
VBUS1 15 15
USB_DN1 14 14
USB_DP1 13 13
GND 12 12
AUDIO1 11 11
WAKEUP1 10 10
RESET1 9 9
GND 8 8
VBUS0 7 7
USB_DN0 6 6
USB_DP0 5 5
GND 4 4
AUDIO0 3 3
WAKEUP0 2 2
RESET 1 1
FFC
To VPWB
9
ISCPWB
YC9
GND 41
GND(AFE_SHP) 40 40
CLPIN 39 39
GND(AFE_SHD) 38 38
AFE_MCLK 37 37
GND 36 36
CCDSEL 35 35
GND 34 34
DIS_CISCKP 33 33
DIS_CISCKN 32 32
GND 31 31
DIS_CIS_5P 30 30
DIS_CIS_5N 29 29
GND 28 28
DIS_CIS_4P 27 27
DIS_CIS_4N 26 26
GND 25 25
DIS_CIS_3P 24 24
DIS_CIS_3N 23 23
GND 22 22
DIS_CIS_2P 21 21
DIS_CIS_2N 20 20
GND 19 19
DIS_CIS_1P 18 18
DIS_CIS_1N 17 17
GND 16 16
AFECLK 15 15
AFE_SO 14 14
AFE_EN 13 13
AFE_SI 12 12
SH 11 11
TG 10 10
VSG 9 9
RS 8 8
GND 7 7
CP 6 6
GND 5 5
CCDCLK2 4 4
GND 3 3
CCDCLK1 2 2
GND 1 1
SHIELD
FFC
YC2
41 GND
1 SHP
2 CLPIN
3 SHD
4 MCLK
5 GND
6 CCDSEL
7 GND
8 TXCLK1P
9 TXCLK1N
10 GND
11 TXOUTC1P
12 TXOUTC1N
13 GND
14 TXOUTB1P
15 TXOUTB1N
16 GND
17 TXOUTC2P
18 TXOUTC2N
19 GND
20 TXOUTB2P
21 TXOUTB2N
22 GND
23 TXOUTA2P
24 TXOUTA2N
25 GND
26 SCLK
27 SDI
28 SENB
29 SDO
30 SH
31 TG
32 VSG
33 RS
34 GND
35 CP
36 GND
37 CCDCLK2
38 GND
39 CCDCLK1
40 GND
CCDPWB
YC11
5.1V5 1 1
GND 2 2
10V5 3 3
GND 4 4
3.3V5 5 5
GND 6 6
YC1
6 5.1V5
5 GND
4 10V5
3 GND
2 3.3V5
1 GND
YC13
GND 1 1
ORG_SW 2 2
5.1V5 3 3
3 GND
2 Vout
1 5.1V5
OSS
YC6
24V4 11 11
24V4 10 10
POW 9 9
PWM 8 8
PGND 7 7
SGND 6 6
VSET 5 5
SCL 4 4
SDA 3 3
FAIL 2 2
5.1V5 1 1
FFC
YC1
11 11
10 10
9 9
8 8
7 7
6 6
5 5
4 4
3 3
2 2
1 1
LEDPWB
YC14
3.3V5 1 1
GND 2 2
CO_SW 3 3
3 3.3V5
2 GND
1 COSW
ODSW
YC8
3.3V5 1 1
GND 2 2
HP_SW 3 3
3 3.3V5
2 GND
1 HPSW
HPS
YC5
SMOT AP 1 1
SMOT BP 2 2
SMOT AN 3 3
SMOT BN 4 4
B3 B
A1 /A
B1 /B
A3 A
ISUM
YC7
24V4 1 1
GND 2 2
GND 3 3
GND 4 4
24V4 5 5
24V4 6 6
From EPWB
2
DF UNIT
EH_CLK 2 2
EH_SI 4 4
EH_SO 3 3
BR_SEL 1 1
DF_SEL 15 15
EH_RDY 5 5
DF_SET 6 6
3.3V 12 12
3.3V_DFSLEEP 13 13
GND 8 8
GND 10 10
N.C. 7 7
N.C. 9 9
N.C. 11 11
KEY 14 14
D-sub
D-sub
YC7
1 EH_CLK
2 EH_SI
3 EH_SO
4 BR_SEL
5 DF_SEL
6 DF_RDY
7 DF_SET
8 3.3V4
9 3.3V4
10 GND
11 GND
ECPWB
EH_CLK 1 7
EH_SI 2 6
EH_SO 3 5
PF_SEL 4 4
PF_RDY 5 3
PF_SET 6 2
PF_PAUSE 7 1
24V4 1 5
3.3V0 2 4
3.3V4 3 3
GND 4 2
GND 5 1
D-sub
D-sub
YC8
1 EH_CLK
2 EH_SI
3 EH_SO
4 PF_SEL
5 PF_RDY
6 PF_SET
7 PF_PAUSE
8 24V4
9 3.3V0
10 3.3V4
11 GND
12 GND
4
4
To PSPWB
AC_LIVE 3
AC_NEUTRAL 2
3 AC_LIVE
2 AC_NEUTRAL
AC_LIVE
AC_NEUTRAL
PF UNIT
DP UNIT
YC1
24V4 16 16
24V4 15 15
24V4 14 14
N.C 13 13
GND 12 12
GND 11 11
GND 10 10
N.C 9 9
DP_OPEN 8 8
DP_SI 7 7
DP_SO 6 6
DP_CLK 5 5
DP_SEL 4 4
DP_RDY 3 3
DP_PAGESET 2 2
FG 1 1
D-sub
D-sub
YC12
16 16 24V4
15 15 24V4
14 14 24V4
13 13 NC
12 12 GND
11 11 GND
10 10 GND
9 9 NC
8 8 DP_OPEN
7 7 DP_SI
6 6 DP_SO
5 5 DP_CLK
4 4 DP_SEL
3 3 DP_RDY
2 2 DP_PAGESET
1 1 GND(SPARE)

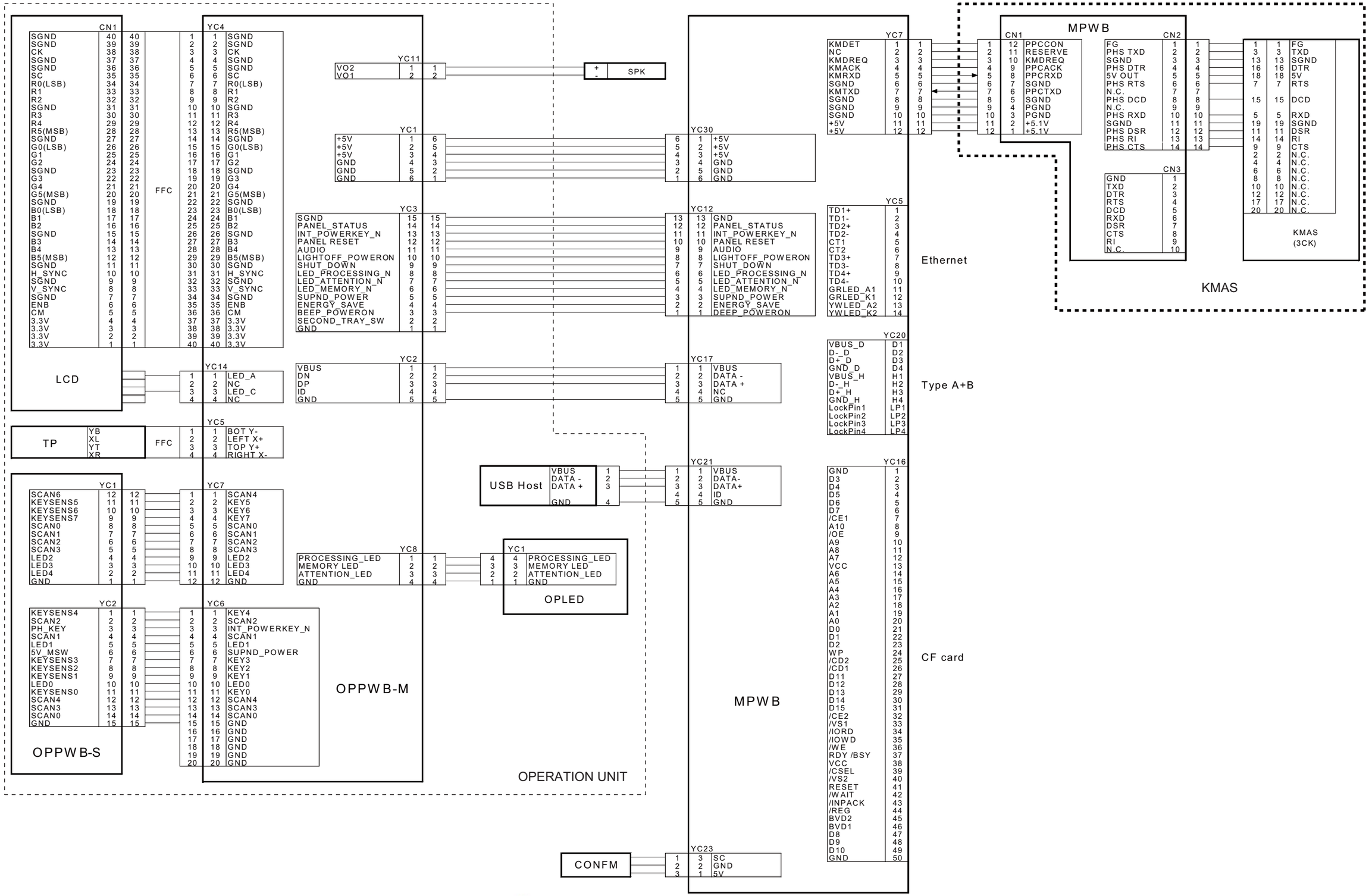
LCD
CN1
YC4
FFC
YC14
LED_A
NC
LED_C
NC
TP
YB
XL
YT
XR
YC5
BOT Y-
LEFT X+
TOP Y+
RIGHT X-
OPPWB-S
YC1
YC2
OPPWB-M
YC7
YC6
YC11
VO2
VO1
SPK
YC1
+5V
GND
YC3
PANEL_STATUS
INT_POWERKEY_N
PANEL RESET
AUDIO
LIGHTOFF_POWERON
SHUT_DOWN
LED_PROCESSING_N
LED_ATTENTION_N
LED_MEMORY_N
SUPND_POWER
ENERGY_SAVE
BEEP_POWERON
SECOND_TRAY_SW
YC2
VBUS
DN
DP
ID
YC8
PROCESSING_LED
MEMORY LED
ATTENTION_LED
OPLED
USB Host
DATA -
DATA +
CONFM
YC23
SC
5V
OPERATION UNIT
YC30
YC12
YC17
YC21
DATA-
YC7
KMDET
KMDREQ
KMACK
KMRXD
KMTXD
+5V
YC5
TD1+
TD1-
TD2+
TD2-
CT1
CT2
TD3+
TD3-
TD4+
TD4-
GRLED_A1
GRLED_K1
YWLED_A2
YWLED_K2
Ethernet
YC20
VBUS_D
D-_D
D+_D
GND_D
VBUS_H
D-_H
D+_H
GND_H
LockPin1
LockPin2
LockPin3
LockPin4
Type A+B
YC16
CF card
MPWB
PPCCON
RESERVE
KMDREQ
PPCACK
PPCRXD
PPCTXD
PGND
+5.1V
CN2
FG
PHS TXD
5V OUT
PHS RTS
PHS DCD
PHS RXD
PHS DSR
PHS RI
PHS CTS
CN3
GND
TXD
DTR
RTS
DCD
RXD
DSR
CTS
RI
KMAS
(3CK)
KMAS

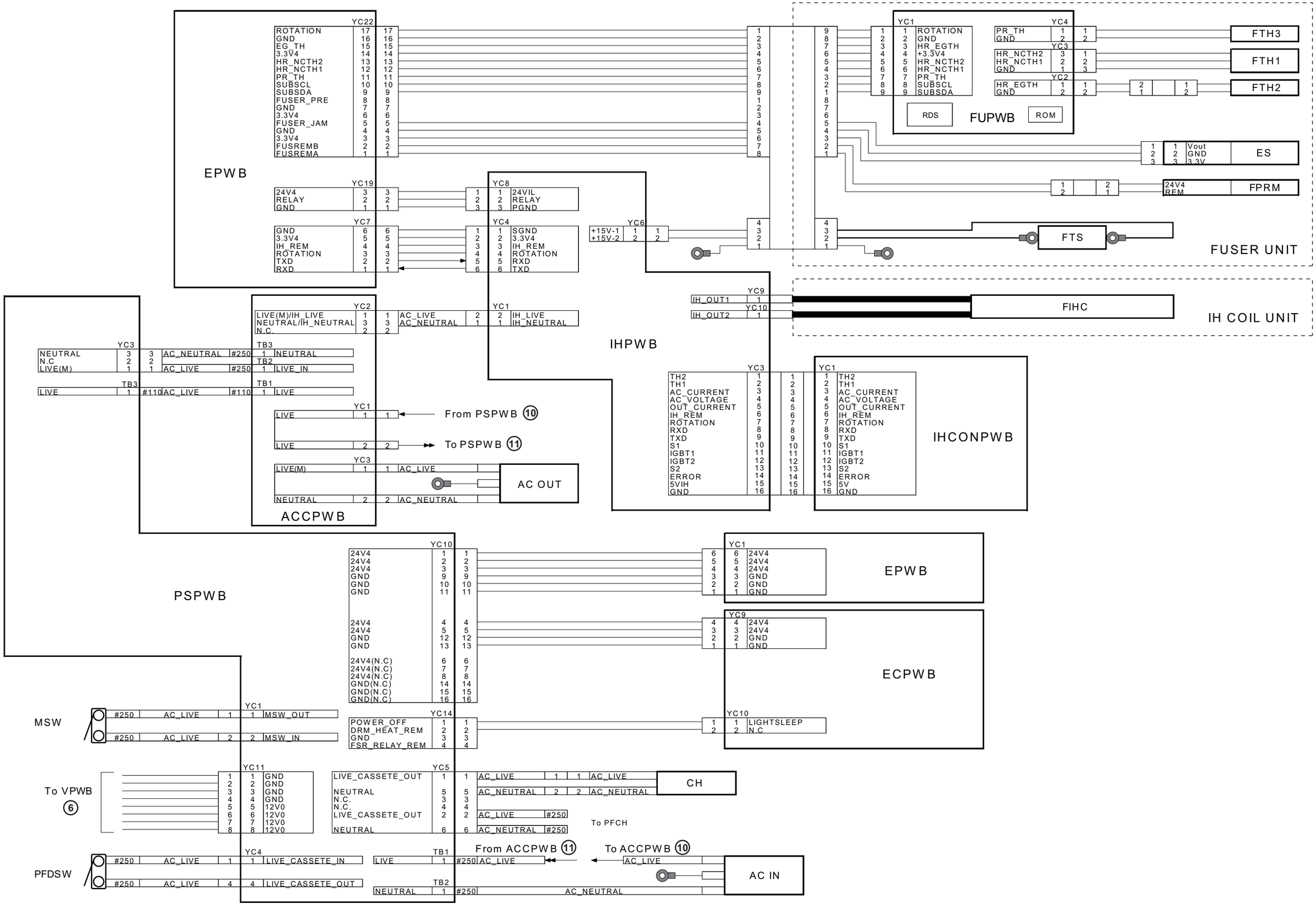
EPWB
YC22
ROTATION
GND
EG_TH
3.3V4
HR_NCTH2
HR_NCTH1
PR_TH
SUBSCL
SUBSDA
FUSER_PRE
GND
3.3V4
FUSER_JAM
GND
3.3V4
FUSREMB
FUSREMA
YC19
24V4
RELAY
GND
YC7
GND
3.3V4
IH_REM
ROTATION
TXD
RXD
YC8
24VIL
RELAY
PGND
YC4
SGND
3.3V4
IH_REM
ROTATION
RXD
TXD
YC6
+15V-1
+15V-2
YC1
ROTATION
GND
HR_EGTH
+3.3V4
HR_NCTH2
HR_NCTH1
PR_TH
SUBSCL
SUBSDA
RDS
FUPWB
ROM
YC4
PR_TH
GND
YC3
HR_NCTH2
HR_NCTH1
GND
YC2
HR_EGTH
GND
FTH3
FTH1
FTH2
Vout
GND
3.3V
ES
24V4
REM
FPRM
FTS
FUSER UNIT
YC9
IH_OUT1
YC10
IH_OUT2
FIHC
IH COIL UNIT
IHPWB
YC3
TH2
TH1
AC_CURRENT
AC_VOLTAGE
OUT_CURRENT
IH_REM
ROTATION
RXD
TXD
S1
IGBT1
IGBT2
S2
ERROR
5VIH
GND
YC1
TH2
TH1
AC_CURRENT
AC_VOLTAGE
OUT_CURRENT
IH_REM
ROTATION
RXD
TXD
S1
IGBT1
IGBT2
S2
ERROR
5V
GND
IHCONPWB
YC2
LIVE(M)/IH_LIVE
NEUTRAL/IH_NEUTRAL
N.C.
AC_LIVE
AC_NEUTRAL
YC1
IH_LIVE
IH_NEUTRAL
YC3
NEUTRAL
N.C
LIVE(M)
AC_NEUTRAL
#250
AC_LIVE
#250
TB3
NEUTRAL
TB2
LIVE_IN
TB3
LIVE
#110
AC_LIVE
#110
TB1
LIVE
YC1
LIVE
From PSPWB 10
LIVE
To PSPWB 11
YC3
LIVE(M)
AC_LIVE
NEUTRAL
AC_NEUTRAL
AC OUT
ACCPWB
PSPWB
YC10
24V4
GND
24V4(N.C)
GND(N.C)
YC1
24V4
GND
EPWB
YC9
24V4
GND
ECPWB
MSW
#250
AC_LIVE
YC1
MSW_OUT
MSW_IN
YC14
POWER_OFF
DRM_HEAT_REM
GND
FSR_RELAY_REM
YC10
LIGHTSLEEP
N.C
To VPWB
6
YC11
GND
12V0
YC5
LIVE_CASSETE_OUT
NEUTRAL
N.C.
AC_LIVE
AC_NEUTRAL
#250
CH
To PFCH
PFDSW
YC4
LIVE_CASSETE_IN
LIVE_CASSETE_OUT
TB1
LIVE
From ACCPWB 11
To ACCPWB 10
AC_LIVE
TB2
NEUTRAL
AC_NEUTRAL
AC IN

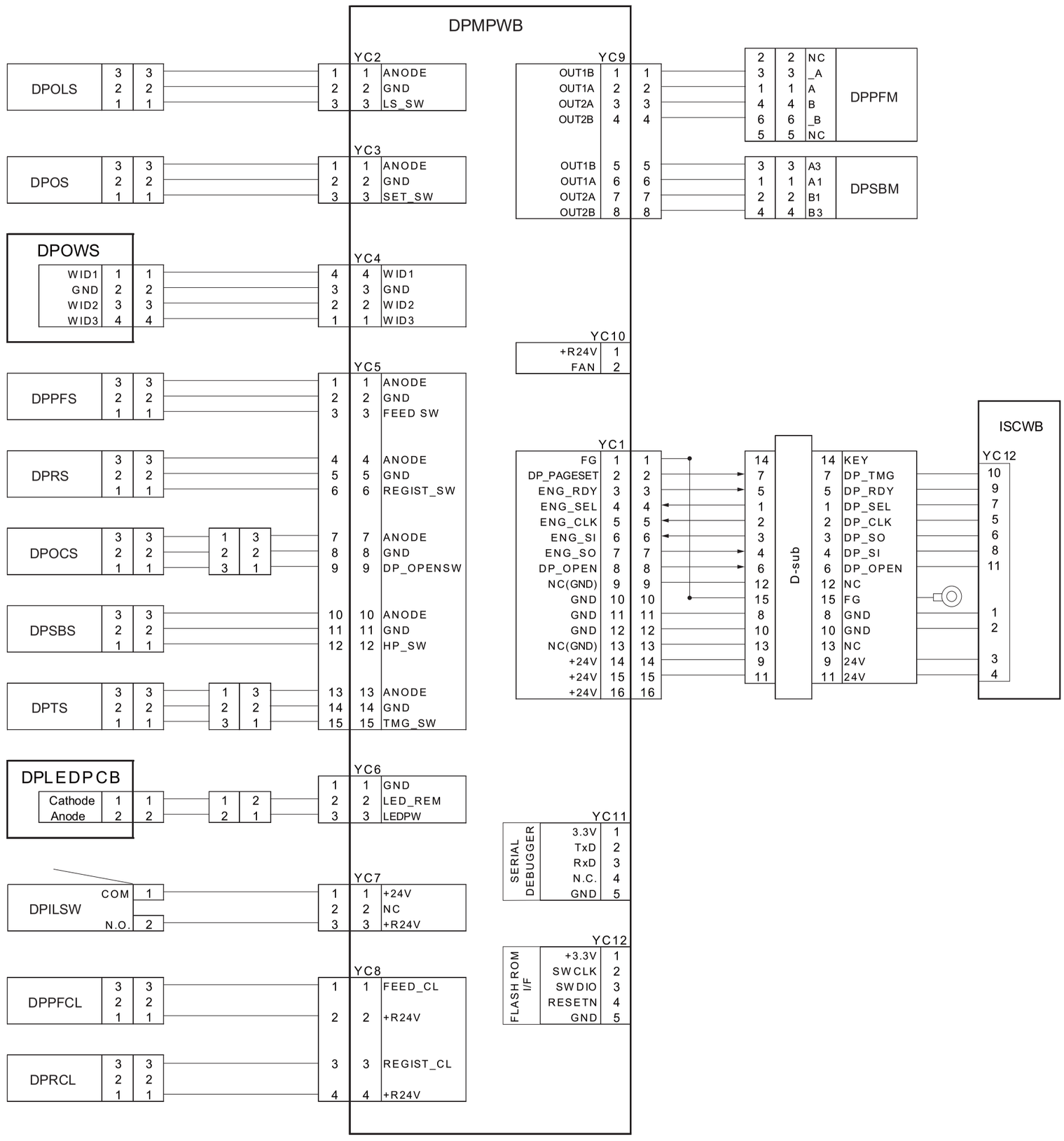
DPMPWB
DPOLS
DPOS
DPOWS
WID1
GND
WID2
WID3
DPPFS
DPRS
DPOCS
DPSBS
DPTS
DPLEDPCB
Cathode
Anode
DPILSW
COM
N.O.
DPPFCL
DPRCL
YC2
ANODE
GND
LS_SW
YC3
SET_SW
YC4
YC5
FEED SW
REGIST_SW
DP_OPENSW
HP_SW
TMG_SW
YC6
LED_REM
LEDPW
YC7
+24V
NC
+R24V
YC8
FEED_CL
REGIST_CL
YC9
OUT1B
OUT1A
OUT2A
OUT2B
DPPFM
DPSBM
YC10
FAN
YC1
FG
DP_PAGESET
ENG_RDY
ENG_SEL
ENG_CLK
ENG_SI
ENG_SO
DP_OPEN
NC(GND)
D-sub
KEY
DP_TMG
DP_SEL
DP_CLK
DP_SO
DP_SI
ISCWB
YC12
YC11
SERIAL DEBUGGER
3.3V
TxD
RxD
N.C.
FLASH ROM I/F
SWCLK
SWDIO
RESETN

PF-790 (Paper feeder)
Installation Guide

INSTALLATION GUIDE

GUIDE D’INSTALLATION

GUÍA DE INSTALACION

INSTALLATIONSANLEITUNG

GUIDA ALL’INSTALLAZIONE

安装手册

설치안내서

設置手順書

PF-790

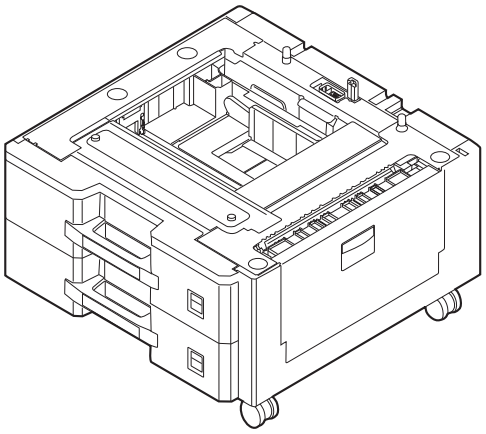

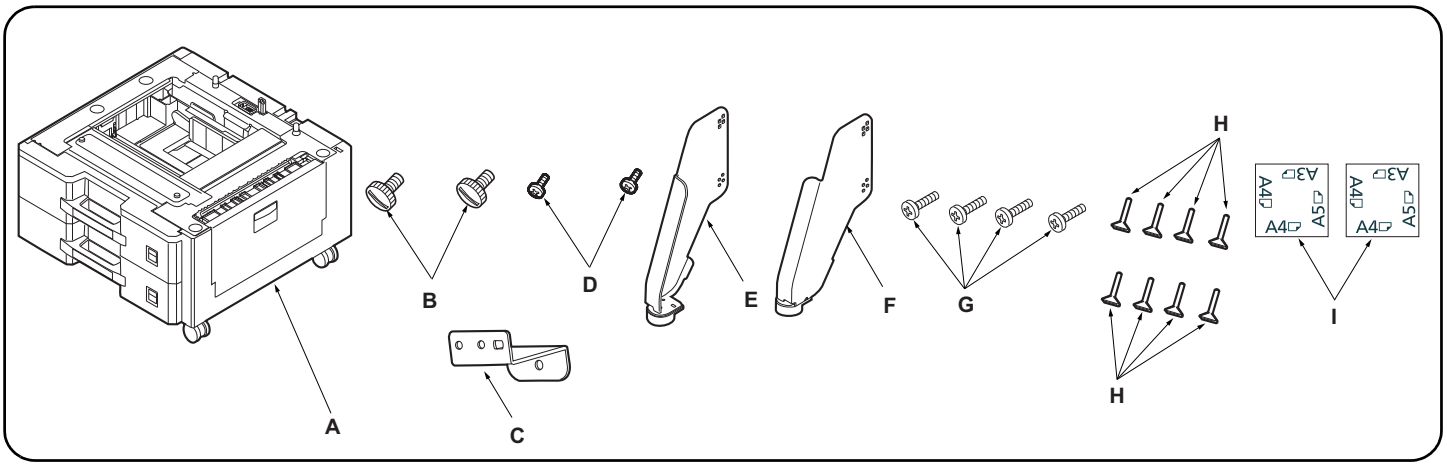

English

Supplied parts

A. Paper feeder 1
B. Fixing pin 2
C. Retainer 1
D. S Tite screw M3 × 12 2
E. Stopper R 1
F. Stopper L 1
G. S Tite screws M4 × 20 4
H. Pin 8
I. Paper size plate 2

Be sure to remove any tape and/or cushioning material from supplied parts.

Français

Pièces fournies

A. Bureau papier 1
B. Broches de fixation 2
C. Élément de retenue 1
D. Vis S Tite M3 × 12 2
E. Butée R 1
F. Butée L 1
G. Vis S Tite M4 × 20 4
H. Broche 8
I. Plateau de format du papier 2

Veillez à retirer les morceaux de bande adhésive et/ou les matériaux de rembourrage des pièces fournies.

Español

Partes suministradas

A. Alimentador de papel 1
B. Pasador de fijación 2
C. Retén 1
D. Tornillos S Tite M3 × 12 2
E. Tope R 1
F. Tope L 1
G. Tornillo S Tite M4 × 20 4
H. Clavija 8
I. Placa de tamaño de papel 2

Asegúrese de despegar todas las cintas y/o material amortiguador de las partes suministradas.

Deutsch

Gelieferte Teile

A. Papiereinzug 1
B. Fixierstift 2
C. Halterung 1
D. S-Tite-Schrauben M3 × 12 2
E. Anschlag R 1
F. Anschlag L 1
G. S-Tite-Schraube M4 × 20 4
H. Stift 8
I. Papierformatplatte 2

Entfernen Sie Klebeband und/oder Dämpfungsmaterial vollständig von den mitgelieferten Teilen.

Italiano

Parti di fornitura

A. Unità di alimentazione della carta 1
B. Perno di fissaggio 2
C. Fermo 1
D. Vite S Tite M3 × 12 2
E. Fermo R 1
F. Fermo L 1
G. Vite S Tite M4 × 20 4
H. Perno 8
I. Piastra formato carta 2

Accertarsi di rimuovere tutti i nastri adesivi e/o il materiale di imbottitura dalle parti fornite.

简体中文

附属品

A. 供纸工作台 1
B. 固定销 2
C. 安装板 1
D. 紧固型 S 螺丝 M3 × 12 2
E. 限位器 R 1
F. 限位器 L 1
G. 紧固型 S 螺丝 M4×20 4
H. 销 8
I. 纸张尺寸插片 2

如果附属品上带有固定胶带，缓冲材料时务必揭下。

한국어

동봉품

A. 급지대 1
B. 고정핀 2
C. 리테이너 1
D. 나사 M3×12 S 타이트 2
E. 전도방지쇠 R 1
F. 전도방지쇠 L 1
G. 나사 M4×20S 타이트 4
H. 핀 8
I. 용지크기 플레이트 2

동봉품에 고정 테이프，완충재가 붙어 있는 경우에는 반드시 제거할 것 .

日本語

同梱品

A. ペーパーフィーダー 1
B. 固定ピン 2
C. 取付板 1
D. ビス M3×12 S タイト 2
E. 転倒防止金具 R 1
F. 転倒防止金具 L 1
G. ビス M4×20 S タイト 4
H. ピン 8
I. 用紙サイズプレート 2

同梱品に固定テープ、緩衝材が付いている場合は必ず取り外すこと。

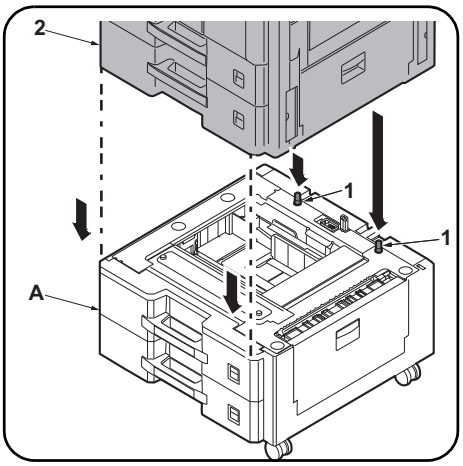

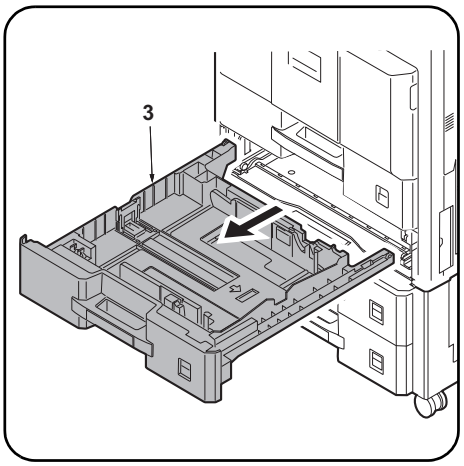

Procedure
Be sure to turn the MFP main power switch off and disconnect the MFP power plug from the wall outlet before starting to install the paper feeder.

1. Place the MFP (2) on the paper feeder (A) so that the pins (1) at the rear left and rear right of the paper feeder (A) are aligned with the holes in the base of the MFP.

2. Remove the lower paper cassette (3) from the MFP.

Procédure
Veiller à bien mettre l'interrupteur principal du MFP hors tension et à débrancher la fiche d'alimentation du MFP de la prise murale avant de commencer l'installation du bureau papier.

1. Monter le MFP (2) sur le bureau papier (A) de sorte que les broches (1) à l'arrière gauche et à l'arrière droit du bureau papier (A) soient alignées avec les trous dans la base du MFP.

2. Retirer le tiroir inférieur (3) du MFP.

Procedimiento
Asegúrese de apagar el interruptor principal del MFP y de desconectar el enchufe del MFP del receptáculo de pared antes de empezar a instalar el alimentador de papel.

1. Coloque el MFP (2) sobre el alimentador de papel (A) de forma tal que las clavijas (1) en los lados posteriores izquierdo y derecho del alimentador de papel (A) estén alineados con los orificios de la base del MFP.

2. Quite el cajón de papel inferior (3) del MFP.

Verfahren
Schalten Sie unbedingt den Hauptschalter des MFP aus, und ziehen Sie den Netzstecker des MFP von der Netzsteckdose ab, bevor Sie mit der Installation des Papiereinzugs beginnen.

1. Den MFP (2) so auf den Papiereinzug (A) setzen, dass die Stifte (1) hinten links und hinten rechts am Papiereinzug (A) auf die Öffnungen im Boden des MFP ausgerichtet sind.

2. Nehmen Sie die untere Papierlade (3) vom MFP ab.

Procedura
Prima di dare inizio alla procedura di installazione dell'unità di alimentazione della carta, non mancare di spegnere l'MFP usando l'interruttore principale di alimentazione e di disinserire la spina del cavo di alimentazione dalla presa a muro della rete elettrica.

1. Posizionare l'MFP (2) sull'unità di alimentazione della carta (A), in modo che i perni (1) alla parte posteriore destra e sinistra dell'unità di alimentazione della carta (A) siano allineati con i fori nella base dell'MFP.

2. Rimuovere il cassetto inferiore della carta (3) dall'MFP.

安装步骤
安装供纸工作台时，必须先关闭 MFP 主机上的主电源开关，并拔出电源插头后方可进行工作。

1. 将 MFP（2）放置在供纸工作台（A）上，使供纸工作台（A）左后和右后部的固定插销（1）与 MFP 基座中的孔对齐。

2. 取出 MFP 主机的下部供纸盒 (3)。

설치순서
급지대를 설치할 때에는 반드시 MFP 본체의 주전원 스위치를 OFF 로 하고 MFP 본체 전원 플러그를 빼고 작업을 할 것 .

1. 급지대 (A) 의 후면 좌측과 후면 우측에 있는 핀들 (1) 이 MFP 의 바닥면에 있는 구멍에 맞도록 MFP(2) 를 급지대 (A) 위에 놓습니다 .

2. MFP 본체의 하단 카세트 (3) 를 꺼냅니다 .

取付手順
ペーパーフィーダーを取り付ける際は、必ず MFP 本体の主電源スイッチを OFF にし、MFP 本体の電源プラグを抜いてから作業をおこなうこと。

1. ペーパーフィーダー(A) の左右後方の各ピン(1)と MFP 本体のベースの穴が合うように、ペーパーフィーダー(A) に MFP 本体 (2) を載せる。

2. MFP 本体の下段カセット (3) を取り外す。

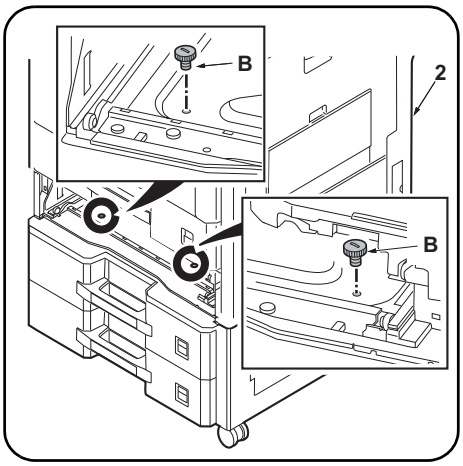

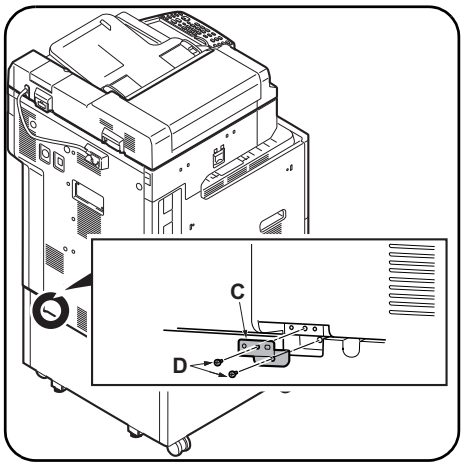

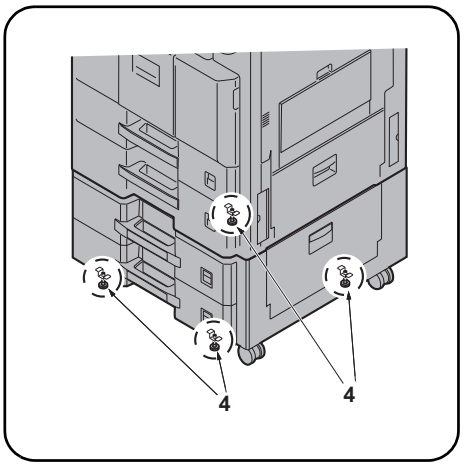

3. Secure the MFP (2) to the paper feeder (A) with the 2 fixing pins (B).
4. Insert cassette (3) into the machine.

5. Install the retainer (C) in the location shown in the figure using 2 S Tite screws M3 × 12 (D).

6. Turn the adjusters on each corner (4) until they reach the floor and then secure the paper feeder.

---

3. Fixer le MFP (2) au bureau papier (A) avec les 2 broches de fixation (B).
4. Insérer le tiroir (3) dans la machine.

5. Installer l'élément de retenue (C) à l'endroit indiqué sur la figure avec 2 vis S Tite M3 × 12 (D).

6. Faire tourner les dispositifs de réglage de chacun des coins (4) jusqu'à ce qu'ils touchent le sol et fixer ensuite le bureau papier.

---

3. Asegure el MFP (2) al alimentador de papel (A) con los 2 pasadores de fijación (B).
4. Coloque la bandeja (3) en la máquina.

5. Instale el retén (C) en el lugar que muestra la ilustración, mediante los 2 tornillos S Tite M3 × 12 (D).

6. Gire los reguladores en cada esquina (4) hasta que lleguen al piso y, a continuación, asegure el alimentador de papel.

---

3. Den MFP (2) mit den 2 Fixierstiften (B) am Papiereinzug (A) sichern.
4. Die Kassette (3) in die Maschine einsetzen.

5. Die Halterung (C) an der dargestellten Stelle mit den 2 S-Tite-Schrauben M3 × 12 (D) befestigen.

6. Die Einsteller an jeder Ecke (4) drehen, bis sie den Boden berühren, und dann den Papiereinzug sichern.

---

3. Fissare l'MFP (2) all'unità di alimentazione della carta (A) con i 2 perni di fissaggio (B).
4. Inserire il cassetto (3) nella macchina.

5. Installare il fermo (C) nella posizione mostrata in figura, utilizzando le 2 viti S Tite M3 × 12 (D).

6. Ruotare i regolatori (4) presenti su ciascun angolo finché vengano a contatto con il pavimento, e quindi fissare l'unità di alimentazione della carta.

---

3. 使用 2 个固定销(B)将 MFP(2)固定至供纸工作台(A)上。
4. 将供纸盒 (3) 装回原来的位置。

5. 使用 2 颗紧固型 S 螺丝 M3 × 12(D)将安装板(C)安装在图示位置。

6. 转动四角上的调节器 (4) 直至与地面接触，然后再固定供纸盒。

---

3. 고정핀 (B) 2 개로 MFP(2) 를 급지대 (A) 에 단단히 고정합니다 .
4. 카세트 (3) 를 본체에 삽입합니다 .

5. S 타이트 M3 × 12 나사(D) 2개를 사용하여 리테이너 (C) 를 그림에 표시된 위치에 설치합니다 .

6. 네 곳의 어져스터 (4) 를 맨 밑에 닿을 위치까지 돌려 급지대를 고정합니다 .

---

3. 固定ピン (B)2 本で MFP 本体 (2) をペーパーフィーダー(A)に固定する。
4. カセット(3)を元通り挿入する。

5. イラストの位置に取付板(C)をビス M3×12 S タイト(D)2 本で取り付ける。

6. 四隅のアジャスター(4) を床に接触する位置まで回し、ペーパーフィーダーを固定する。

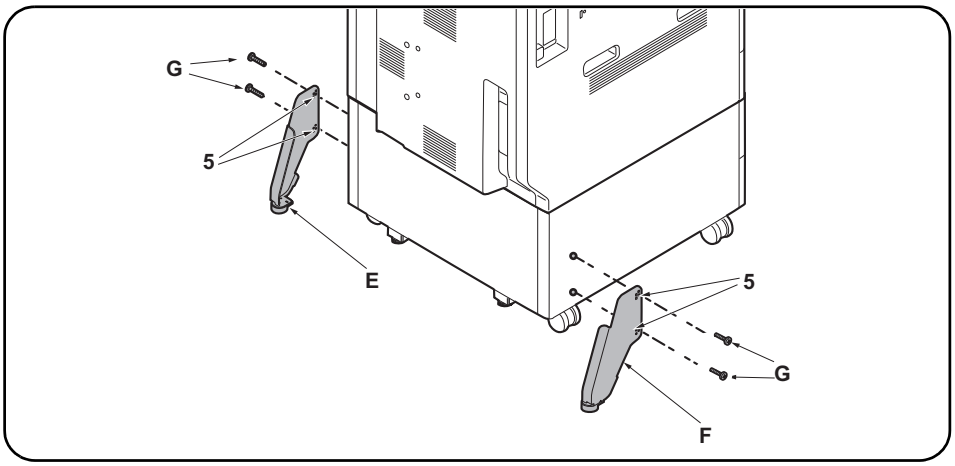

7. Select holes (5) and install each stopper (E,F) with 2 S Tite screws M4 × 20 (G) so that the stoppers will be grounded on the floor.

---

7. Sélectionner les trous (5) et installer chaque butée (E,F) avec 2 vis S Tite M4 × 20 (G) de sorte que les butées reposent sur le sol.

---

7. Seleccione los orificios (5) e instale cada tope (E,F) con los 2 tornillos S Tite M4 × 20 (G) de manera que los topes se conecten a tierra en el suelo.

---

7. Wählen Sie die Öffnungen (5) und befestigen Sie jeden Anschlag (E,F) mit den 2 S-Tite-Schrauben M4 × 20 (G) so an, dass die Anschläge am Boden aufsitzen.

---

7. Selezionare i fori (5) ed installare ogni fermo (E,F) con le 2 viti S Tite M4 × 20 (G) in modo che i fermi siano posti a terra sul pavimento.

---

7. 在孔（5）处各用 2 颗 M4×20 紧固型 S 螺丝（G）安装限位器（E,F），使之和地板接触。

---

7. 전도방지쇠 (E,F) 가 바닥면에 접지될 수 있도록 구멍 (5) 을 선택해 나사 M4×20 S 타이트 (G) 각 2 개로 설치합니다 .

---

7. 転倒防止金具 (E,F) が床面に接地するように、穴(5)を選択してビス M4×20 S タイト (G) 各 2 本で取り付ける。

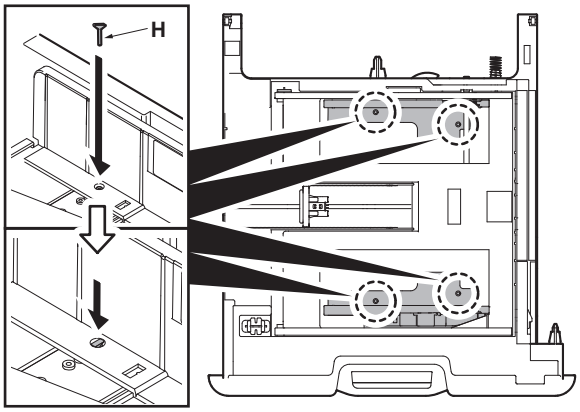

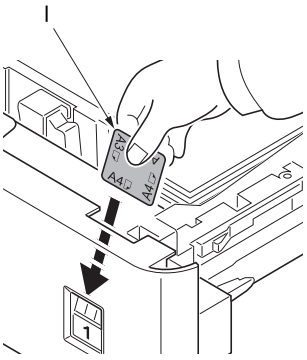

Fix Paper Width Guide

You can fix the paper width guide using the supplied retaining pins(H).
Follow the steps below as necessary.

1. Pull out the cassette.
2. Align the paper width guide holes with the holes in the cassette for the paper width you want to set.
3. Insert the pin (H) into the holes aligned in step 2 to fix the paper guide in place.
4. Push the cassette back in.

Loading the paper size plate

Insert the paper size plate (I) into the respective size display slot.

Fixation du guide de largeur du papier

Vous pouvez fixer le guide de largeur du papier en utilisant les goupilles de fixation (H) fournies.
Suivez les étapes ci-dessous en fonction des besoins.

1. Sortir le tiroir.
2. Aligner les trous du guide de largeur de papier sur les trous du tiroir en fonction du papier qui doit être posé.
3. Insérer la broche (H) dans les trous alignés au point 2 pour maintenir le guide de papier en place.
4. Remettre le tiroir en place.

Insertion du plateau de format du papier

Insérer le plateau de format du papier (I) dans la fente indiquant la taille appropriée.

Fijar la guía de anchura del papel

Puede fijar la guía de anchura del papel con los pernos de retén (H) proporcionados.
Siga los pasos siguientes según sea necesario.

1. Extraiga el cajón.
2. Alinee los orificios de la guía de ajuste de la anchura con los orificios del cajón que corresponden a la anchura de papel que desee ajustar.
3. Inserte la clavija (H) en los orificios alienados en el paso 2 para fijar la guía de papel en su lugar.
4. Vuelva a introducir el cajón.

Carga de la placa de tamaño de papel

Inserte la placa de tamaño de papel (I) en la ranura de visualización de tamaño correspondiente.

Papierbreitenführung befestigen

Sie können die Papierbreitenführung mit den gelieferten Haltebolzen (H) befestigen.
Folgen Sie den Schritten unten falls notwendig.

1. Ziehen Sie die Papierlade heraus.
2. Richten Sie die Breiteneinstellungslöcher für das Papier auf jene Löcher in der Papierlade aus, die der gewünschten Papierbreite entsprechen.
3. Stecken Sie den Stift (H) in die bei Schritt 2 ausgerichteten Löcher, um die Papierführung zu arretieren.
4. Schieben Sie die Papierlade wieder hinein.

Einlegen der Papierformatplatte

Schieben Sie die Papierformatplatte (I) in den entsprechenden Formatanzeigeschlitz.

Fissare la guida di larghezza carta

Per fissare la guida di larghezza carta, utilizzare i perni di fissaggio (H) forniti.
Eseguire i seguenti punti come necessario.

1. Estrarre il cassetto.
2. Allineare i fori della guida carta con i fori nel cassetto, alla larghezza della carta che si desidera impostare.
3. Inserire il perno (H) nei fori allineati nel passo 2 per fissare la guida carta in posizione.
4. Spingere il cassetto all'interno.

Caricamento della piastra formato carta

Inserire la piastra formato carta (I) nello slot di visualizzazione del formato rispettivo.

固定纸张宽度导板

您可以使用附带的定位销 (H) 固定纸张宽度导板。
必要时执行如下步骤。

1. 拉出供纸盒。
2. 对齐纸张宽度导板孔和供纸盒中的孔以设定所需的纸张宽度。
3. 将销 (H) 插入步骤 2 中对齐的孔以将纸张导板固定到位。
4. 将供纸盒推回机内。

装载纸张尺寸插片

将纸张尺寸插片（I）插入各自显示尺寸的插槽中。

용지폭 가이드 고정

기기와 함께 제공된 핀 (H) 로 용지폭 가이드를 고정시킬 수 있습니다 .
필요하면 아래의 작업을 하십시오 .

1. 카세트를 밖으로 당깁니다 .
2. 용지폭 가이드 구멍을 설정하고자 하는 용지 폭의 카세트 구멍에 맞춥니다 .
3. 핀 (H) 를 단계 2 에서 정렬한 구멍에 삽입하여 용지 가이드를 제자리에 고정합니다 .
4. 카세트를 다시 밀어 넣습니다 .

용지 크기 플레이트 장착하기

용지 크기 플레이트 (I) 를 해당 크기 표시 슬롯에 삽입합니다 .

用紙幅ガイドの固定

用紙幅ガイドは同梱のピン (H) で固定することが可能です。必要に応じて以下の作業を行ってください。

1. カセットを引き出す。
2. 固定したい用紙幅に合わせて、用紙幅ガイドの穴と、カセットの穴を合わせる。
3. 手順 2 で合わせた穴にピン (H) を挿入し、用紙ガイドを固定する。
4. カセットを元に戻す。

用紙サイズプレートのセット

用紙サイズプレート (I) を、サイズ表示スロットにそれぞれ挿入する。

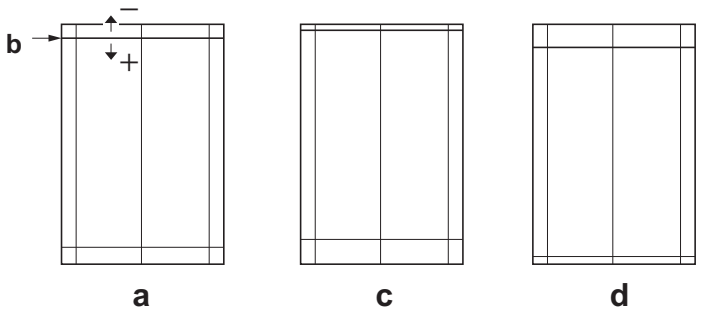

Adjusting the leading edge timing

The reference value for the leading edge timing is 20 ±1.0 mm at position (b) in the correct image (a). If the timing is outside this range, perform the following adjustment.

1. Set maintenance mode U034, select LSU Out Top and Cassette(L)
2. Adjust the values.
   Test pattern (c): Increase the setting value. Test pattern (d): Decrease the setting value.
3. Press the Start key to confirm the setting value.

Réglage de la synchronisation du bord de tête

La valeur de référence de la synchronisation du bord de tête est de 20 ±1,0 mm à la position (b) d'une image correcte (a). Si la synchronisation est hors de cette plage, procéder au réglage suivant.

1. Passer en mode maintenance U034, sélectionner LSU Out Top et Cassette(L).
2. Régler les valeurs.
   Mire d' essai (c): Augmentez la valeur de réglage. Mire d' essai (d): Diminuez la valeur de réglage.
3. Appuyer sur la touche de Start pour confirmer la valeur de réglage.

Cómo ajustar la sincronización del borde superior

El valor de referencia de la sincronización del borde superior es de 20 ±1,0 mm en la posición (b) de la imagen correcta (a). Si la sincronización estuviera fuera de este rango, haga el siguiente ajuste.

1. Entre al modo de mantenimiento U034, seleccione LSU Out Top y Cassette(L).
2. Ajuste los valores.
   Patrón de prueba (c): Aumente el valor de configuración. Patrón de prueba (d): Reduzca el valor de configuración.
3. Pulse la tecla de Start para confirmar el valor de configuración.

Einstellen des Vorderkanten-Timing

Der Bezugswert des Vorderkanten-Timing ist 20 ±1,0 mm an Position (b) des korrekten Bilds (a). Falls das Timing außerhalb dieses Bereichs liegt, ist folgende Einstellung vorzunehmen.

1. Schalten Sie in den Wartungsmodus U034, wählen Sie LSU Out Top und Cassette(L).
2. Die Werte einstellen.
   Testmuster (c): Den Einstellwert erhöhen. Testmuster (d): Den Einstellwert verringern.
3. Den Einstellwert durch Drücken der Start-Taste bestätigen.

Regolazione della sincronizzazione del bordo principale

Il valore di riferimento per la sincronizzazione del bordo principale è 20 ±1,0 mm alla posizione (b) nell'immagine corretta (a). Se la sincronizzazione è all'infuori di questa gamma, effettuare la regolazione seguente.

1. Impostare la modalità manutenzione U034, selezionare LSU Out Top e Cassette(L).
2. Regolare i valori.
   Modello di prova (c): Aumentare il valore dell'impostazione. Modello di prova (d): Diminuire il valore dell'impostazione.
3. Premere il tasto di Start per confermare il valore dell'impostazione.

前端对位调节

前端对位的基准值在矫正图像 (a) 的 (b) 位置为 20±1.0mm。超出该范围时，须进行以下调节。

1. 设置维护模式 U034，选择 LSU Out Top、Cassette(L)。
2. 调整设定值。
   测试图案 (c)：调高设定值。 测试图案 (d)：调低设定值。
3. 按 Start 键，以确定设定值。

선단 타이밍 조정

선단 타이밍은 적정화상 (a) 의 (b) 위치에서 기준치는 20±1.0mm. 여기에서 벗어나는 것은 이하의 조정을 합니다 .

1. 메인터넌스 모드 U034 를 세트하고 LSU Out Top, Cassette(L) 을 선택합니다 .
2. 설정치를 조정합니다 .
   테트스 패턴 (c) :설정치를 높입니다 . 테스트 패턴 (d) :설정치를 내립니다 .
3. 시작키를 누르고 설정치를 확인합니다 .

先端タイミング調整

先端タイミングは、適正画像 (a) の (b) の位置で基準値は 20±1.0mm。これから外れるときは以下の調整をおこなう。

1. メンテナンスモード U034 をセットし、LSU Out Top, Cassette を選択する。
2. 設定値を調整する。
   テストパターン (c) :設定値を上げる。 テストパターン (d) :設定値を下げる。
3. スタートキーを押し、設定値を確定する。

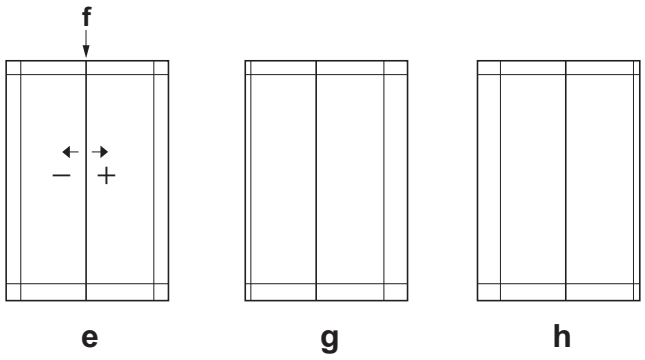

Adjusting the center line

The reference value for the center line is ±0.5 mm or less at position (f) in the correct image (e). If the center line position is outside this range, perform the following adjustment.

1. Set maintenance mode U034, select LSU Out Left and Cassette3 or Cassette4.
2. Adjust the values.
   Test pattern (g): Increase the setting value. Test pattern (h): Decrease the setting value.
3. Press the Start key to confirm the setting value.

Réglage de l'axe

La valeur de référence pour l'axe est de ±0,5 mm ou moins à la position (f) d'une image correcte (e). Si la position de l'axe est hors de cette plage, effectuez le réglage suivant.

1. Passer en mode maintenance U034, sélectionner LSU Out Left et Cassette3 ou Cassette4.
2. Régler les valeurs.
   Mire d' essai (g): Augmentez la valeur de réglage. Mire d' essai (h): Diminuez la valeur de réglage.
3. Appuyer sur la touche de Start pour confirmer la valeur de réglage.

Ajuste de la línea central

El valor de referencia de la línea central es de ±0,5 mm o menor, en la posición (f) de la imagen correcta (e). Si la posición de la línea central estuviera fuera de este rango, haga el siguiente ajuste.

1. Entre al modo de mantenimiento U034, seleccione LSU Out Left y Cassette3 o Cassette4.
2. Ajuste los valores.
   Patrón de prueba (g): Aumente el valor de configuración. Patrón de prueba (h): Reduzca el valor de configuración.
3. Pulse la tecla de Start para confirmar el valor de configuración.

Einstellen der Mittenlinie

Der Bezugswert für die Mittenlinie ist ±0,5 mm oder weniger an Position (f) des korrekten Bilds (e). Falls die Mittenlinie außerhalb dieses Bereichs liegt, ist folgende Einstellung vorzunehmen.

1. Schalten Sie in den Wartungsmodus U034, wählen Sie LSU Out Left und Cassette3 oder Cassette4.
2. Die Werte einstellen.
   Testmuster (g): Den Einstellwert erhöhen. Testmuster (h): Den Einstellwert verringern.
3. Den Einstellwert durch Drücken der Start-Taste bestätigen.

Regolazione della linea centrale

Il valore di riferimento per la linea centrale è ±0,5 mm o inferiore alla posizione (f) nell'immagine corretta (e). Se la posizione della linea centrale è all'infuori di questa gamma, effettuare la regolazione seguente.

1. Impostare la modalità manutenzione U034, selezionare LSU Out Left e Cassette3 o Cassette4.
2. Regolare i valori.
   Modello di prova (g): Aumentare il valore dell'impostazione. Modello di prova (h): Diminuire il valore dell'impostazione.
3. Premere il tasto di Start per confermare il valore dell'impostazione.

中心线调节

中心线的基准值在矫正图像 (e) 的 (f) 位置为 ±0.5mm 以内。超出该范围时，须进行以下调节。

1. 设置维护模式 U034，选择 LSU Out Left、Cassette3 或 Cassette4。
2. 调整设定值。
   测试图案 (g)：调高设定值。 测试图案 (h)：调低设定值。
3. 按 Start 键，以确定设定值。

센터라인 조정

센터라인은 적정화상 (e) 의 (f) 위치에서 기준치는 ±0.5mm 이내 . 여기에서 벗어나는 것은 이하의 조정을 합니다 .

1. 메인터넌스 모드 U034 를 세트하고 LSU Out Left, Cassette3 또는 Cassette4 를 선택합니다 .
2. 설정치를 조정합니다 .
   테트스 패턴 (g) :설정치를 높입니다 . 테스트 패턴 (h) :설정치를 내립니다 .
3. 시작키를 누르고 설정치를 확인합니다 .

センターライン調整

センターラインは、適正画像 (e) の (f) の位置で基準値は ±0.5mm 以内。これから外れるときは以下の調整をおこなう。

1. メンテナンスモード U034 をセットし、LSU Out Left, Cassette3 または Cassette4 を選択する。
2. 設定値を調整する。
   テストパターン (g) :設定値を上げる。 テストパターン (h) :設定値を下げる。
3. スタートキーを押し、設定値を確定する。

DF-470 (Document finisher) Installation Guide

DF-470 DOCUMENT FINISHER , AK-470 ATTACHMENT KIT

305JS5674001

for Color MFP 25/25

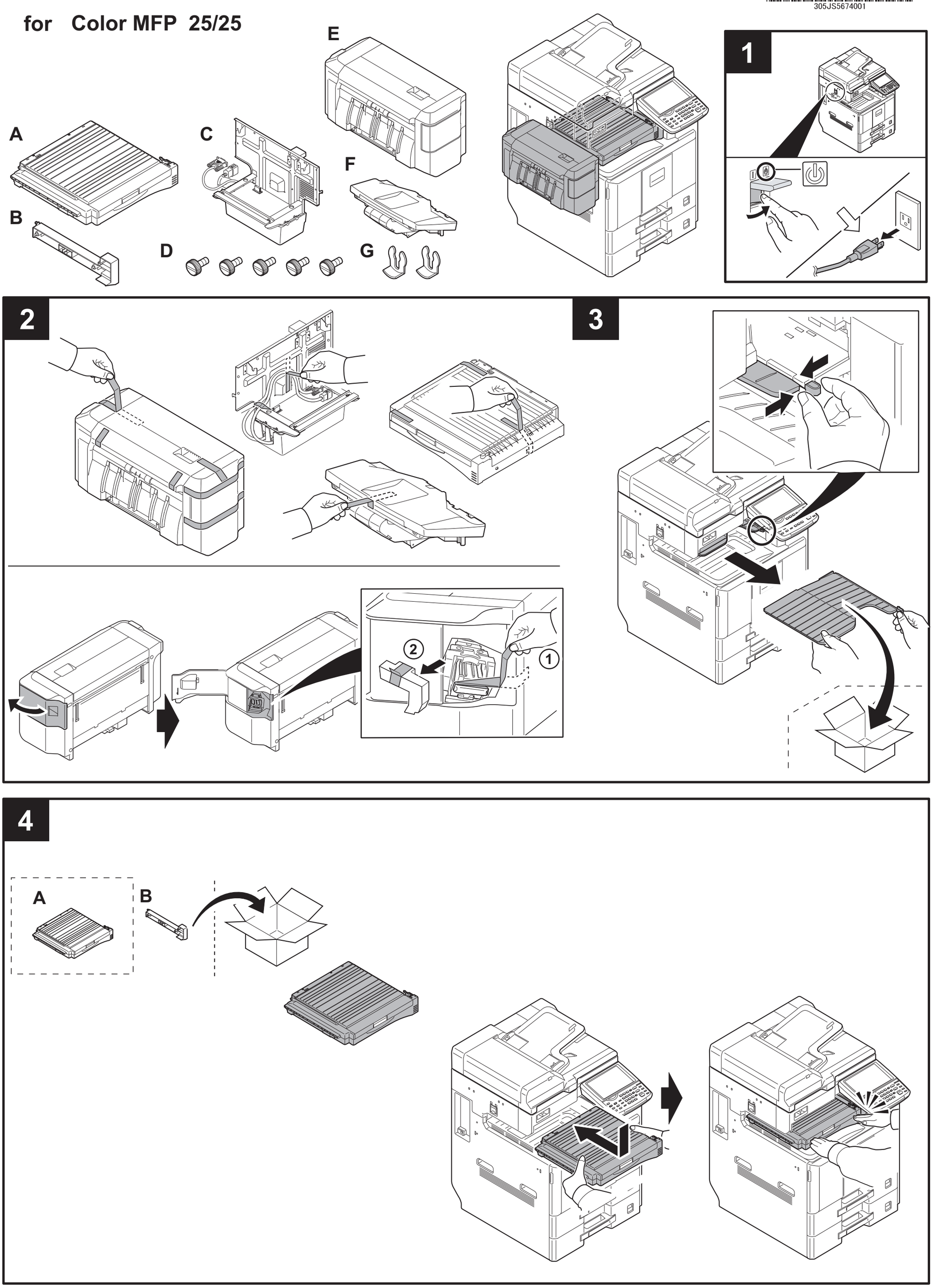

2011.9
305JS56740-01

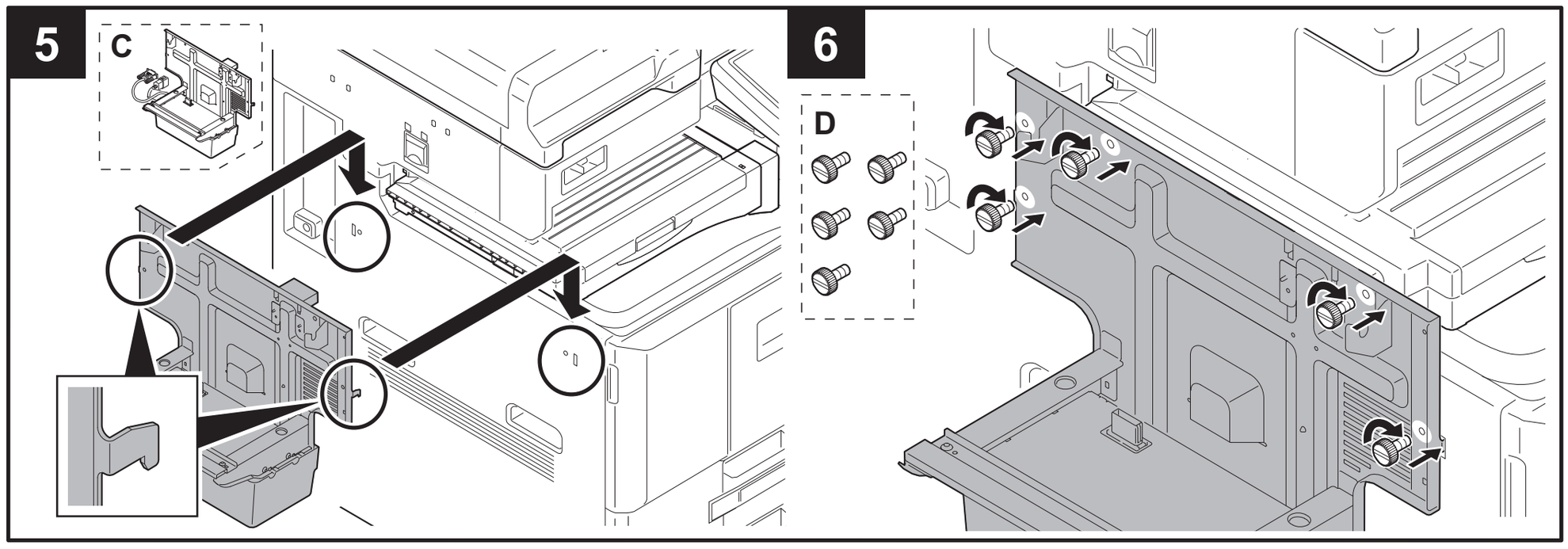

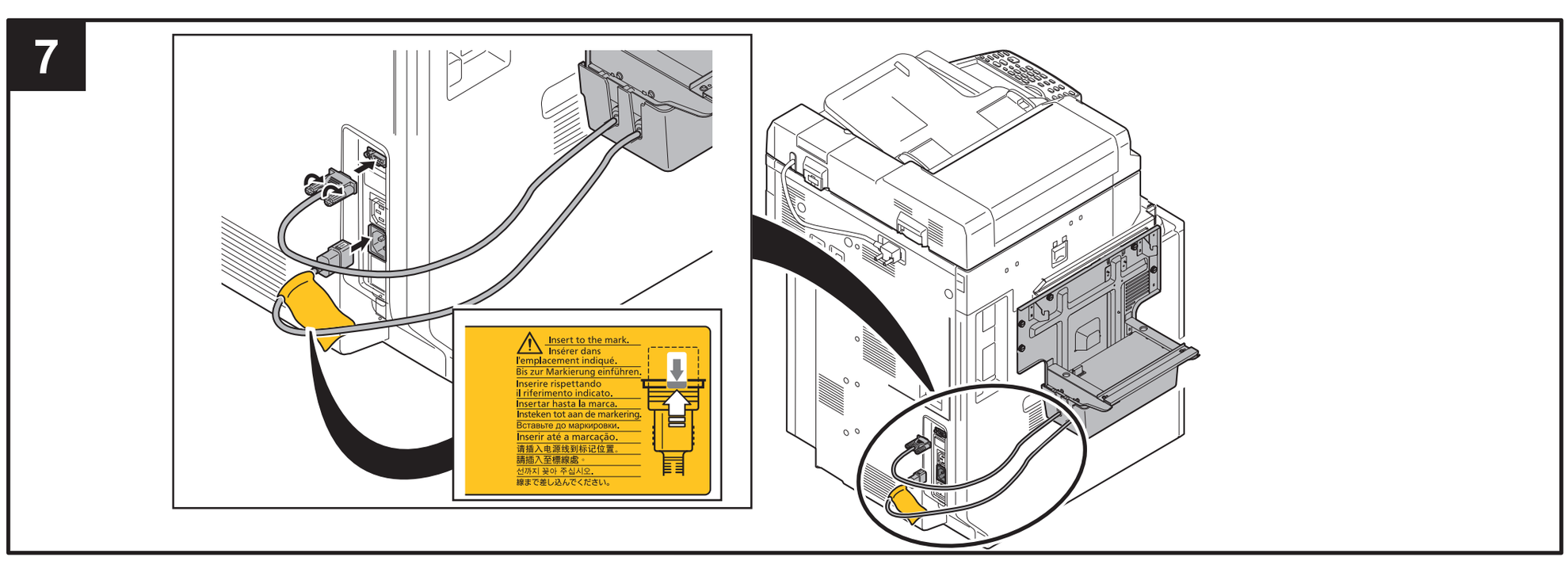

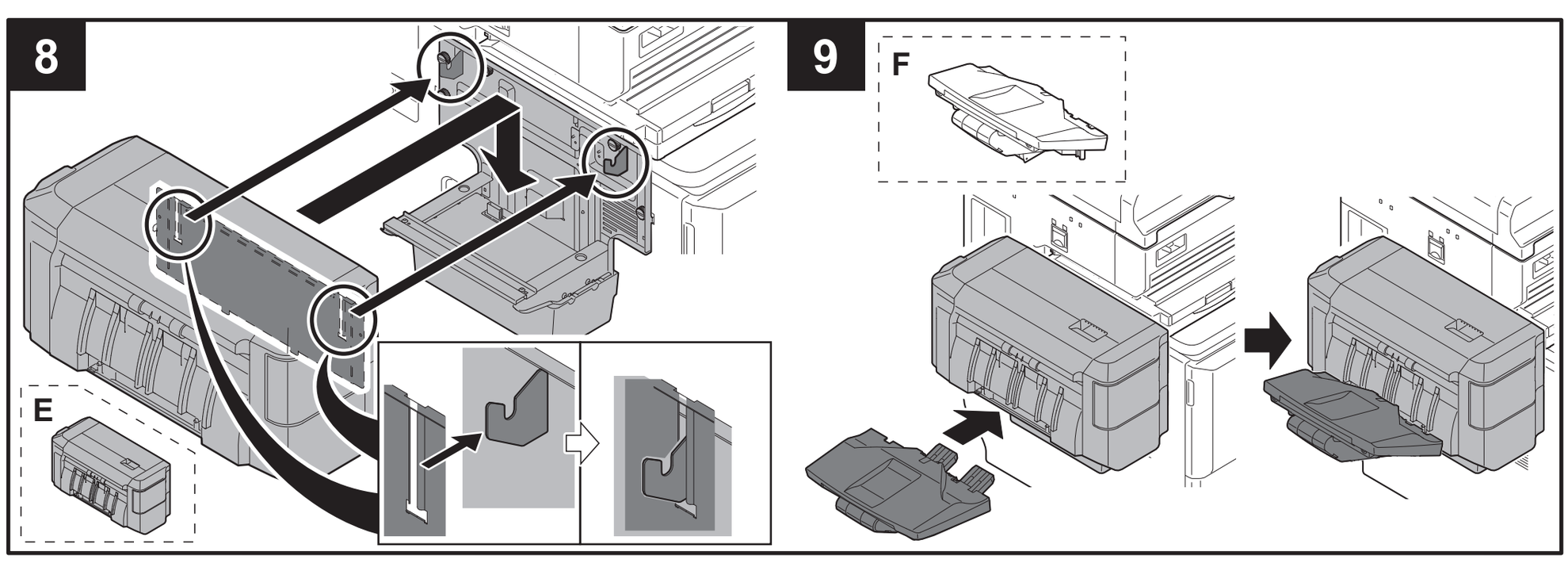

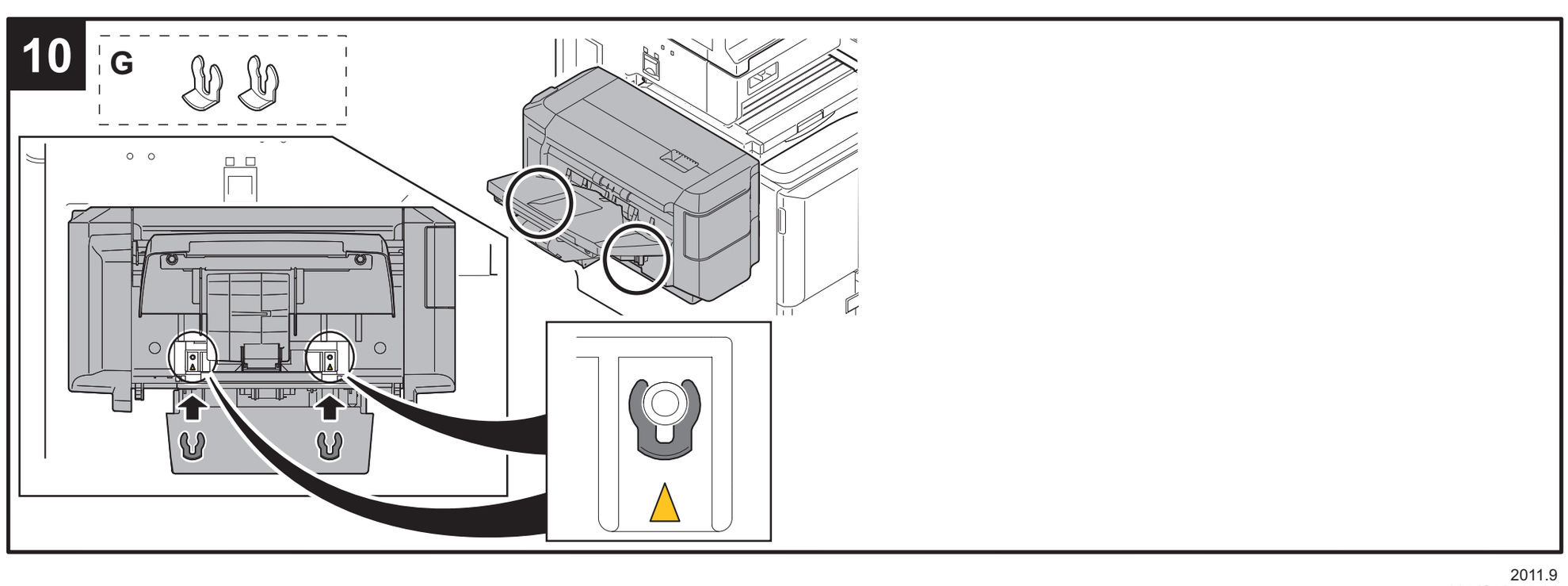

2011.9
305JS56740-01

DT-730 (Document tray)
Installation Guide

302LC5672001

INSTALLATION GUIDE
GUIDE D'INSTALLATION
GUÍA DE INSTALACION
INSTALLATIONSANLEITUNG
GUIDA ALL'INSTALLAZIONE
安装手册
설치안내서
設置手順書

for Color MFP 25/25ppm

DT-730

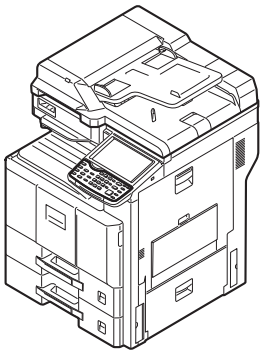

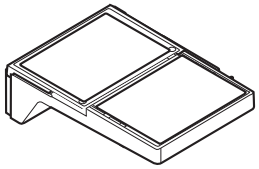

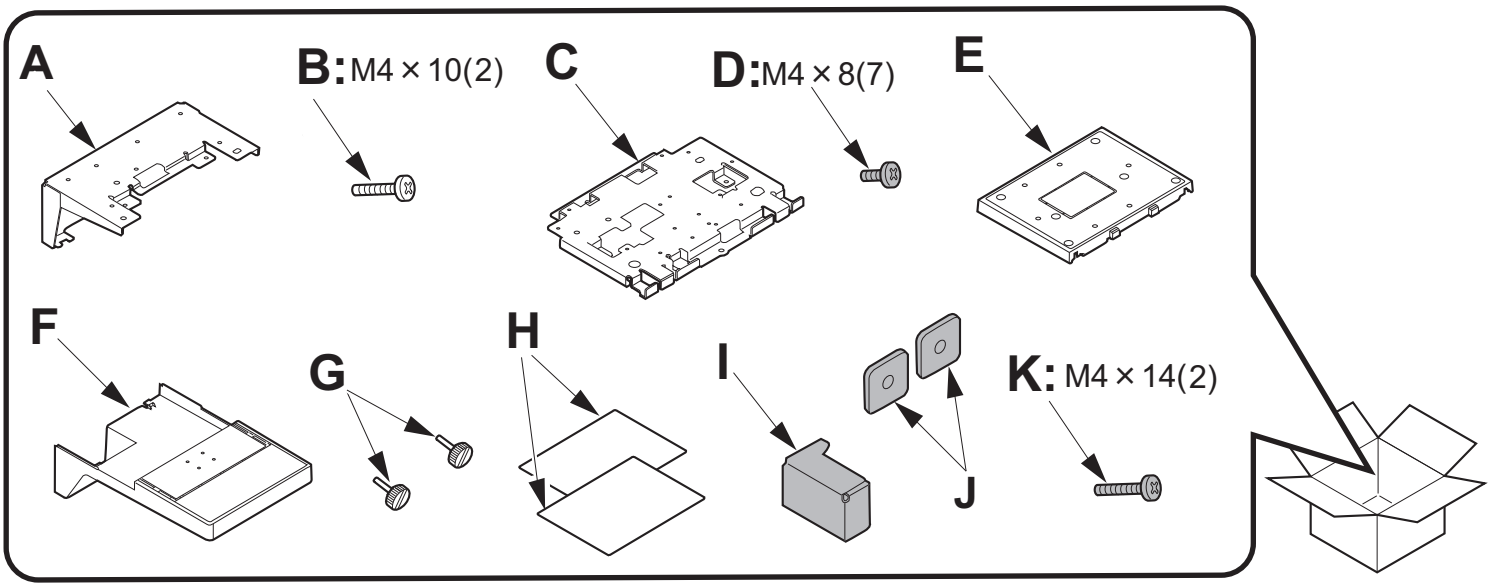

ENG (I), (J) and (K) are not used. 1 piece of (D) will be left.

FR (I), (J) et (K) ne sont pas utilisés. Une pièce de (D) sera laissée inutilisée.

ES (I), (J) y (K) no se utilizan. Una parte de (D) debe dejarse.

DE (I), (J) und (K) werden nicht verwendet. 1 Stück von (D) bleibt übrig.

IT (I), (J) e (K) non vengono utilizzati. Rimarrà 1 pezzo di (D).

CN 不使用(I),(J),(K)。 会剩余(D)1 个。

KO (I),(J) 및 (K)가 사용되지 않습니다. (D) 피스 하나가 남게 됩니다.

JP (I),(J),(K)は使用しません。(D)は、1本余ります。

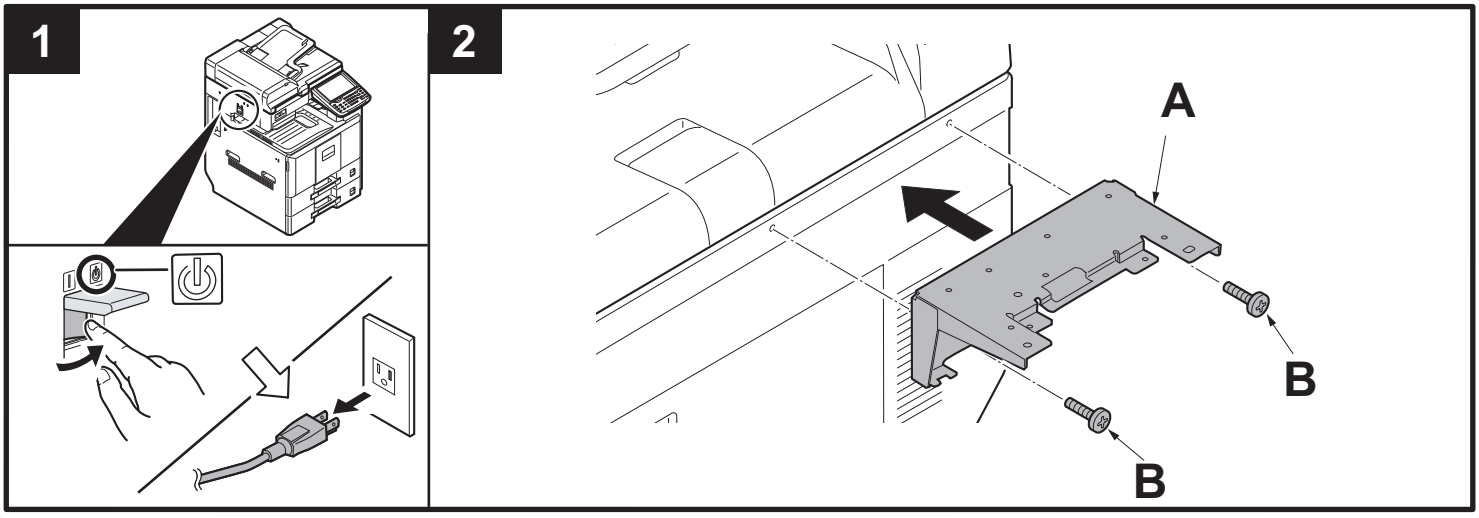

2011.12
302LC56720-01

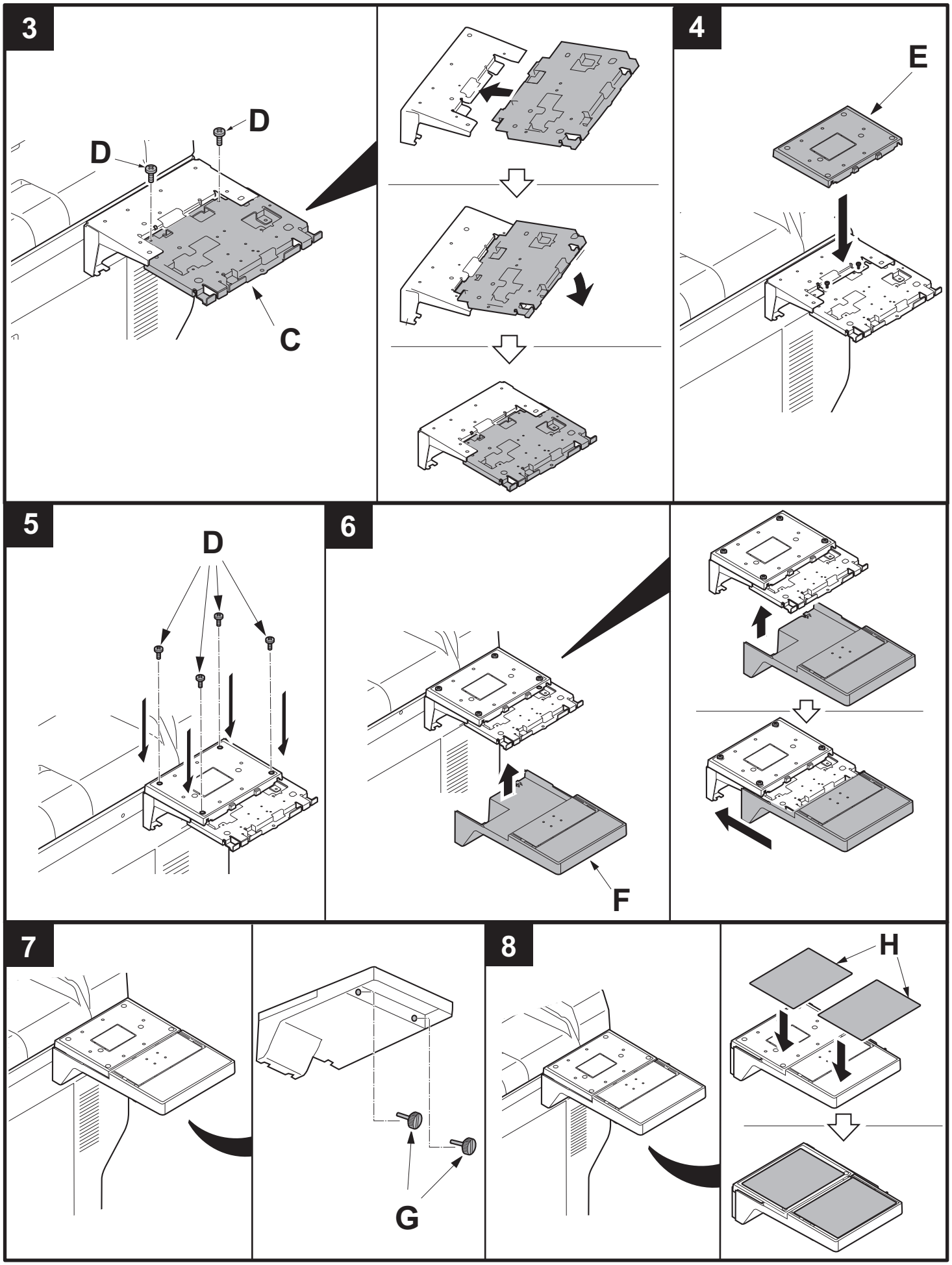

2011.12
302LC56720-01

FAX System(W)
Installation Guide

INSTALLATION GUIDE

GUIDE D'INSTALLATION

GUÍA DE INSTALACION

INSTALLATIONSANLEITUNG

GUIDA ALL'INSTALLAZIONE

安装手册

설치안내서

設置手順書

FAX System (W)

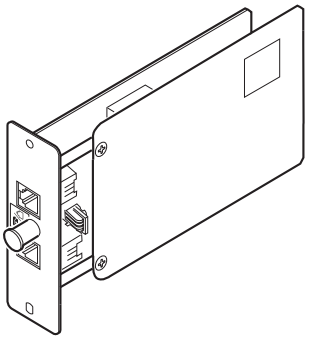

English

To install the FAX circuit board, see page 1.
To install the FAX circuit board as Dual FAX, see page 12.
If the finisher is already installed, remove the finisher before installing FAX System(W).
For details, see the instructions on page 17.

Français

Pour installer la carte à circuits FAX, se reporter à la page 1.
Pour installer la carte à circuits FAX comme FAX double, se reporter à la page 12.
Si le retoucheur est déjà en place, le déposer avant de monter le FAX System(W).
Pour plus de précisions, se reporter aux instructions de la page 17.

Español

Para instalar la tarjeta de circuitos de FAX, vea la página 1.
Para instalar la tarjeta de circuitos de FAX en el FAX dual, vea la página 12.
Si el finalizador ya se encuentra instalado, desmóntelo antes de instalar el FAX System(W).
Consulte las instrucciones de la página 17 para obtener información más detallada.

Deutsch

Angaben zur Installation der FAX-Leiterplatte finden Sie auf Seite 1.
Angaben zur Installation der FAX-Leiterplatte als Dual FAX finden Sie auf Seite 12.
Falls der Finisher schon installiert ist, müssen Sie ihn ausbauen, bevor Sie das FAX System(W) installieren.
Einzelheiten hierzu finden Sie in den Anleitungen auf Seite 17.

Italiano

Per installare la scheda a circuiti FAX, vedere pagina 1.
Per installare la scheda a circuiti FAX come Dual FAX, vedere pagina 12.
Se la finitrice è già installata, rimuovere la finitrice prima di installare il FAX System(W).
Per maggiori informazioni in merito si prega di leggere le istruzioni riportate a pagina 17.

简体中文

安装传真组件时 … 从第 1 页开始。
安装多插口组件时 … 从第 12 页开始。
已安装装订器时，必须先拆下装订器再安装 FAX System(W)。
有关详情，请参阅第 17 页的说明。

한국어

팩스 시스템을 설치하는 경우 …1 페이지에서 시작합니다 .
멀티포트를 설치하는 경우 …12 페이지에서 시작합니다 .
피니셔가 이미 장착되어 있는 경우에는 피니셔를 제거하고 FAX System(W) 를 설치할 것 .
상세는 17 페이지를 참조해 주십시오 .

日本語

ファクスシステムを設置する場合 …1 ページから始める。
マルチポートを設置する場合 …12 ページから始める。
フィニッシャーがすでに装着されている場合は、フィニッシャーを取り外してから、FAX System(W) を取り付けること。
詳細は、17 ページ参照の事。

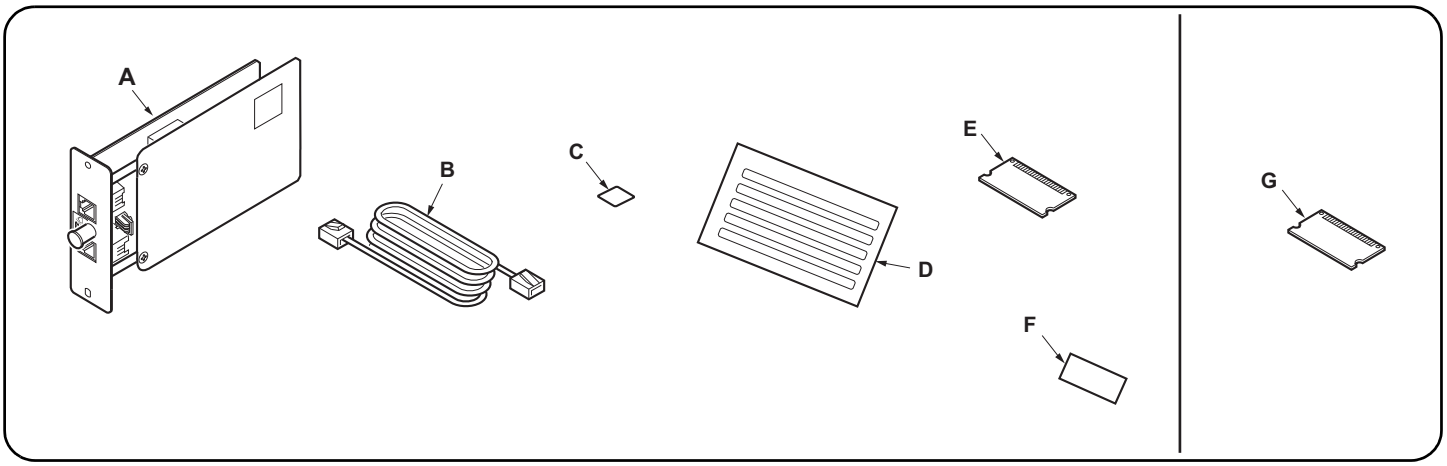

Supplied parts
A. FAX circuit board 1
C. Terminal seal 1
D. Alphabet label 1
E. Memory DIMM (16 MB) 1
F. PTT label (110V model only) 1

Option
G. Memory DIMM (128 MB) 1

(B) is not bundled.
When installing the Dual FAX, (A), (C) are required.

Pièces fournies
A. Carte à circuits FAX 1
C. Joint de borne 1
D. Etiquette de l'alphabet 1
E. Mémoire DIMM (16 MB) 1

Option
G. Mémoire DIMM (128 MB) 1

(B),(F) ne sont pas fournis.
L'installation du Dual FAX requiert l'installation des pièces (A), (C).

Partes suministradas
A. Tarjeta de circuitos de fax 1
C. Sello del terminal 1
D. Etiqueta de alfabeto 1
E. Memoria DIMM (16 MB) 1

Opción
G. Memoria DIMM (128 MB) 1

(B) y (F) no se suministran.
Cuando instale el fax Dual se necesitan (A), (C).

Gelieferte Teile
A. FAX-Leiterplatte 1
C. Verschlusskappe 1
D. Alphabetaufkleber 1
E. Speicher-DIMM (16 MB) 1

Option
G. Speicher-DIMM (128 MB) 1

(B), (F) liegen nicht bei.
Für die Installation von Dual FAX sind (A), (C) erforderlich.

Parti di fornitura
A. Scheda a circuiti FAX 1
C. Guarnizione terminale 1
D. Etichetta alfabetica 1
E. Memoria DIMM (16 MB) 1

Opzioni
G. Memoria DIMM (128 MB) 1

(B), (F) non sono in dotazione.
Quando si installa il Dual FAX, sono necessari (A), (C).

附属品
A. 传真电路板..... 1
B. 电话线..... 1
C. 端子密封..... 1
D. 英文字母标签..... 1
E. 内存模组 DIMM (16MB) 1

F. 规格标签 1

选购件
G. 内存模组 DIMM (128MB) 1

安装多插口组件时，需要 (A)、(B)、(C)。

동봉품
A. FAX 기판 1
C. 단자씰 1
D. 알파벳 라벨 1
E. 메모리 DIMM (16MB) 1

옵션
G. 메모리 DIMM (128MB) 1

(B), (F) 는 동봉되어 있지 않습니다.
멀티포트 설치 시에는 (A),(B),(C) 가 필요합니다.

同梱品
A. FAX 基板..... 1
B. モジュラーコード..... 1
C. 端子シール..... 1
E. メモリーDIMM(16MB)..... 1

オプション
G. メモリーDIMM(128MB) 1

(D), (F) は、同梱されていない。
マルチポート設置時は (A), (B), (C) が必要となる。

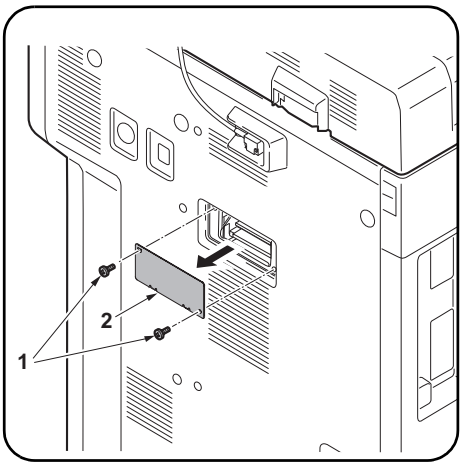

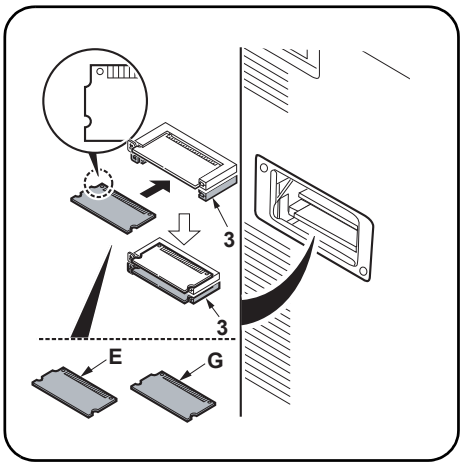

Precautions
Be sure to remove any tape and/or cushioning material from supplied parts.
Be sure to turn the MFP switch OFF and unplug the MFP from the power supply before installing the fax system.

Procedure
Installing the memory DIMM
1. Remove 2 screws (1), and then remove the cover (2).
2. Install the memory DIMM (E) or the optional memory DIMM (G) into the memory slot (3) on the lower level (FLS).
   Install it with the IC side facing down. Insert it in the direction of the arrow until it clicks.
3. Replace the cover (2) using the 2 screws (1).

Précautions
Veillez à retirer les morceaux de bande adhésive et/ou les matériaux de rembourrage des pièces fournies.
Veiller à mettre l'interrupteur principal du MFP hors tension et à débrancher le MFP de la prise secteur avant d'installer le système fax.

Procédure
Installation de la mémoire DIMM
1. Déposez les 2 vis (1) puis enlevez le couvercle (2).
2. Installer la mémoire DIMM (E) ou la mémoire DIMM en option (G) dans la fente mémoire (3) se trouvant au niveau inférieur (FLS).
   L'installer avec le côté IC en bas. L'insérer dans la direction de la flèche jusqu'au clic.
3. Reposez le couvercle (2) à l'aide des 2 vis (1).

Precauciones
Asegúrese de despegar todas las cintas y/o material amortiguador de las partes suministradas.
Asegúrese de apagar el MFP colocando el interruptor principal a OFF y desenchufe el MFP del suministro de red eléctrica antes de instalar el sistema de fax.

Procedimiento
Instalación de la memoria DIMM
1. Quite 2 tornillos (1) y, después, desmonte la cubierta (2).
2. Instale la memoria DIMM (E), o la memoria DIMM opcional (G), en la ranura para memoria (3) en el nivel inferior (FLS).
   Instálelo con el lado IC hacia abajo.Insértela en la dirección que indica la flecha hasta que escuche un clic.
3. Vuelva a colocar la cubierta (2) utilizando los 2 tornillos (1).

Vorsichtsmaßnahmen
Entfernen Sie Klebeband und/oder Dämpfungsmaterial vollständig von den mitgelieferten Teilen.
Schalten Sie den Netzschalter des MFP aus und trennen Sie den MFP vom Netz, bevor Sie das Faxsystem installieren.

Verfahren
Installation der DIMM-Speichermodule
1. Entfernen Sie 2 Schrauben (1) und nehmen Sie dann die Abdeckung (2) ab.
2. Setzen Sie das DIMM-Speichermodul (E) oder das optionale DIMM-Speichermodul (G) in die untere Position (FLS) der Speicherbank (3) ein.
   Mit der IC-Seite nach unten weisend installieren.Schieben Sie das Modul in Pfeilrichtung, bis es hörbar einrastet.
3. Bringen Sie die Abdeckung (2) wieder mit den 2 Schrauben (1) an.

Precauzioni
Accertarsi di rimuovere tutti i nastri adesivi e/o il materiale di imbottitura dalle parti fornite.
Assicurarsi di aver spento l'interruttore dell'MFP e di aver sfilato la spina dell'MFP dalla presa prima di installare il sistema fax.

Procedura
Installazione della memoria DIMM
1. Rimuovere 2 viti (1), e quindi rimuovere il coperchio (2).
2. Installare la memoria DIMM (E) o la memoria DIMM opzionale (G) nello slot della memoria (3) al livello inferiore (FLS).
   Installare con il lato IC rivolto verso il basso.Inserirla nella direzione della freccia finché non scatta in posizione.
3. Ricollocare il coperchio (2) utilizzando le 2 viti (1).

注意事项
如果附属品上带有固定胶带，缓冲材料时务必揭下。
请务必关闭 MFP 的开关并拔下电源插头再安装传真组件。

安装步骤
安装内存模组 DIMM
1. 取下 2 个螺丝 (1)，然后取下盖板 (2)。
2. 将内存模组 DIMM (E) 或选购件内存模组 DIMM (G) 安装至下层 (FLS) 的内存插槽 (3)。安装时，将 IC 侧正面朝下。沿箭头方向将其插入到底直至发出喀嗒声。
3. 使用 2 个螺丝 (1) 重新安装盖板 (2)。

주의사항
동봉품에 고정 테이프 , 완충재가 붙어 있는 경우에는 반드시 제거할 것 .
팩스 시스템을 설치하는 경우에는 MFP 본체의 주 전원 스위치를 OFF 로 하고 전원 플러그를 뺀 다음 작업을 합니다 .

설치순서
메모리 DIMM 설치
1. 나사 (1) 2 개를 제거하고 커버 (2) 를 제거합니다 .
2. 메모리 DIMM (E) 또는 옵션 메모리 DIMM(G) 를 하단 (FLS) 의 메모리 슬롯 (3) 에 장착합니다 .IC 면을 밑으로 할 것 .
   딸칵하고 소리가 날 때까지 화살표 방향으로 삽입합니다 .
3. 나사 (1) 2 개로 커버 (2) 를 원래대로 장착합니다 .

注意事項
同梱品に固定テープ、緩衝材が付いている場合は必ず取り外すこと。
ファクスシステムを設置する場合は、MFP 本体の主電源スイッチを OFF にし、電源プラグを抜いてから作業をおこなう。

取付手順
メモリーDIMM の取り付け
1. ビス (1)2 本を外し、カバー(2) を取り外す。
2. メモリーDIMM(E)または、オプションのメモリーDIMM(G) を下段 (FLS) のメモリースロット (3) に取り付ける。
   IC 面を下向きに取り付けること。
   カチッと音がするまで矢印方向に挿入する。
3. ビス (1)2 本で、カバー(2) を元通り取り付ける。

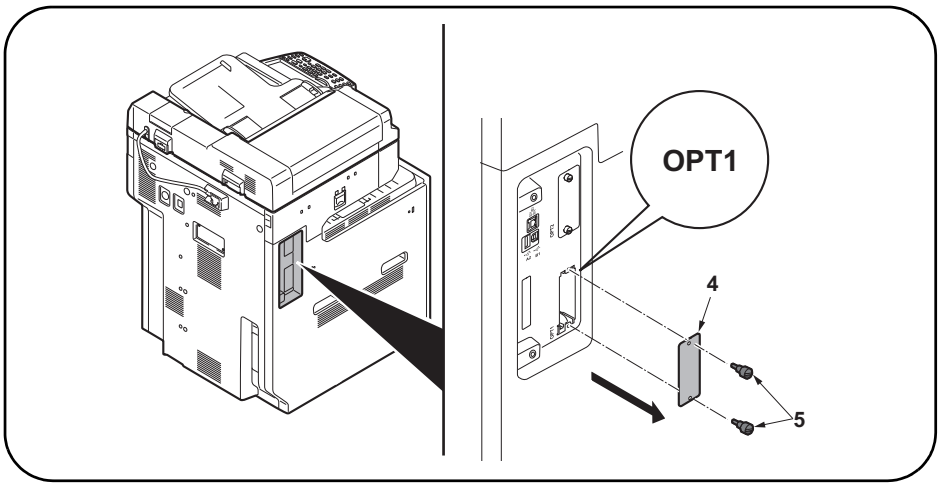

Removing the slot cover

4. Remove 2 screws (5) and then remove the OPT1 slot cover (4).
* Do not use OPT2.

To install the FAX circuit board as Dual FAX, see page 12.

Dépose du couvercle de la fente

4. Déposer les 2 vis (5) puis le couvercle de la fente OPT1 (4).
* Ne pas utiliser OPT2.

Pour installer la carte à circuits FAX comme FAX double, se reporter à la page 12.

Desmontaje de la cubierta de la ranura

4. Quite 2 tornillos (5) y, después, quite la cubierta de la ranura OPT1 (4).
* No utilice OPT2.

Para instalar la tarjeta de circuitos de FAX en el FAX dual, vea la página 12.

Entfernen der Einschubabdeckung

4. 2 Schrauben (5) entfernen und dann die Abdeckung (4) des Einschubs OPT1 entfernen.
* OPT2 nicht verrwenden.

Angaben zur Installation der FAX-Leiterplatte als Dual FAX finden Sie auf Seite 12.

Rimozione del coperchio vano

4. Rimuovere le 2 viti (5) e quinidi rimuovere il coperchio (4) del vano OPT1.
* Non utilizzare OPT2.

Per installare la scheda a circuiti FAX come Dual FAX, vedere pagina 12.

拆下插槽盖板

4. 拆除 2 颗螺丝 (5)，拆下 OPT1 的插槽盖板 (4)。
※ 不使用 OPT2。

安装多插口组件时 … 从第 12 页开始

슬롯커버 제거

4. 나사 (5) 2 개를 제거하고 OPT1 의 슬롯커버 (4) 를 제거합니다 .
※OPT2 는 사용하지 말 것 .

멀티포트를 설치하는 경우 …12 페이지에서 시작합니다 .

スロットカバーの取り外し

4. ビス (5)2 本を外し、OPT1 のスロットカバー(4) を取り外す。
※OPT2 は使用しないこと。

マルチポートを設置する場合 …12 ページから始める。

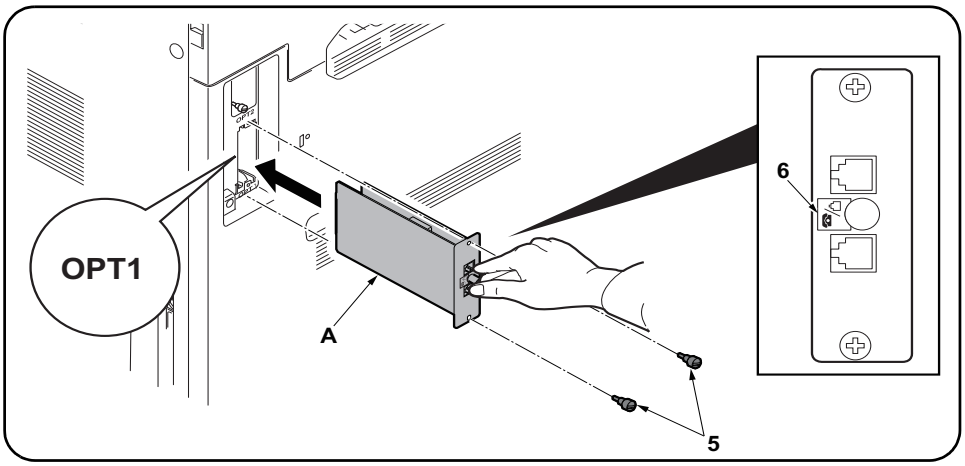

Install the FAX circuit board.

5. Insert the FAX circuit board (A) along the groove in OPT1 and secure the board with two screws (5) that have been removed in step 4.
Do not directly touch the FAX circuit board (A) terminal. Hold the top and bottom of the FAX circuit board, or the projection of the board to insert the FAX circuit board (A).
Direct the label (6) on to the FAX circuit board (A) as indicated in the illustration and insert the board along the groove.

Installer la carte à circuits FAX.

5. Insérer la carte à circuits FAX (A) le long de la rainure dans l'OPT1 et la fixer à l'aide des deux vis (5) retirées à l'étape 4.
Ne pas toucher directement la borne de la carte à circuits FAX (A). Tenir les parties inférieure et supérieure de la carte à circuits FAX ou la saillie de la carte pour insérer la carte à circuits FAX (A).Orienter l'étiquette (6) de la carte à circuits FAX (A) comme illustré et insérer la plaquette le long de la rainure.

Instale la tarjeta de circuitos de fax.

5. Inserte la tarjeta de circuitos de fax (A) a lo largo de la ranura de OPT1 y asegúrela con los dos tornillos (5) que ha quitado en el paso 4.
No toque directamente el terminal de la tarjeta de circuitos del fax (A). Sujete las partes superior e inferior de la tarjeta de circuitos de fax o la saliente de la tarjeta para insertar la tarjeta de circuitos de fax (A).Oriente la etiqueta (6) en la tarjeta de circuitos del FAX (A) como se indica en la ilustración e inserte la tarjeta a lo largo de la ranura.

Installieren der FAX-Leiterplatte.

5. FAX-Leiterplatte (A) in die Nut des Einbauschachts OPT1 einsetzen und Leiterplatte mit den in Schritt 4 ausgebauten Schrauben (5) befestigen.
Berühren Sie die Anschlüsse der FAX-Platine (A) nicht mit den Fingern. Die FAX-Leiterplatte (A) bein Einsetzen oben und unten oder an dem Vorsprung festhalten.
Die FAX-Leiterplatte (A) so in die Nut einsetzen, dass der Aufkleber (6) wie abgebildet zur Leiterplatte zeigt.

Installare la scheda a circuiti FAX.

5. Inserire la scheda a circuiti FAX (A) lungo l'incavo nell'OPT1 e fissare la scheda con le due viti (5) rimosse nell'operazione 4.
Non toccare direttamente il terminale della scheda a circuiti FAX (A). Per inserire il circuito FAX (A), tenere l'estremit superiore e la base della scheda a circuiti FAX, o la sporgenza della scheda a circuiti FAX. Orientare l'etichetta (6) sulla scheda a circuiti FAX (A) come indicato nell'illustrazione e inserire la scheda lungo l'incavo.

安装传真电路板

5. 沿着 OPT1 的沟槽插入传真电路板 (A) 并用在步骤 4 中拆下的两颗螺钉 (5) 固定电路板。
请勿直接触摸传真电路板 (A) 端子。
按住传真电路板的顶部和底部，或者按住电路板的突出部将传真电路板 (A) 插入。
将传真电路板 (A) 上的标签 (6) 保持图示中的方向，将电路板沿着沟槽方向插入。

FAX 기판 장착

5. OPT1 구에 붙여 FAX 기판 (A) 를 삽입하고 순서 4 에서 제거한 나사 (5) 2 개로 고정합니다 .
FAX 기판 (A) 의 단자에 직접 닿지 않게 할 것 .
FAX 기판 (A) 을 삽입 시에는 기판의 상하 또는 돌기를 잡을 것 .
FAX 기판 (A) 을 붙여진 라벨 (6) 그림 표기 방향대로 되도록 삽입할 것 .

FAX 基板の取り付け

5. OPT1 の溝に沿って FAX 基板 (A) を挿入し、手順 4 で外したビス (5)2 本で固定する。
FAX 基板 (A) の端子に直接触れないこと。
FAX 基板 (A) の挿入時は基板の上下か突起を持つこと。
FAX 基板 (A) は、貼り付けられているラベル (6) が図に示す方向になるように、挿入すること。

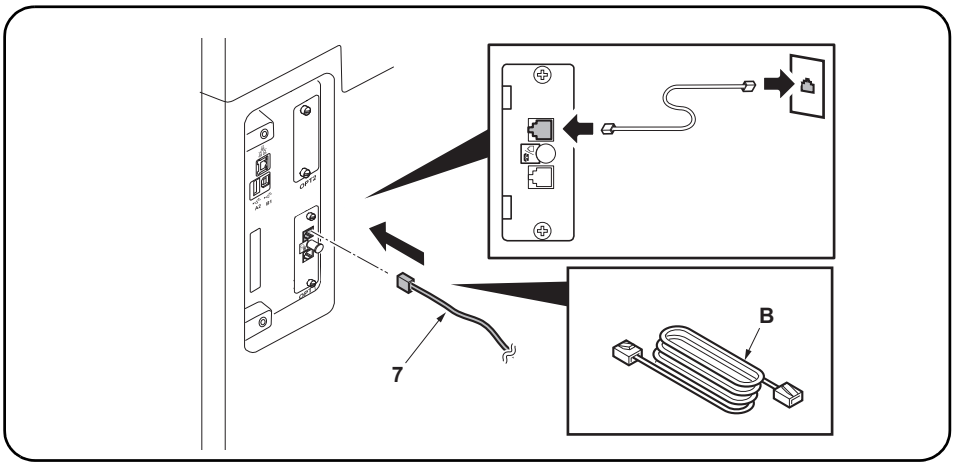

Connect the MFP to the telephone line.

6. Plug the modular connector cable (7) into the line terminal, and then connect the other end to the telephone line.

For 100 V or Chinese models, use the supplied modular connecter cable (B).

Connecter le MFP à la ligne de téléphone.

6. Brancher le câble du connecteur modulaire (7) à la borne de la ligne, puis connecter l'autre extrémité à la ligne de téléphone.

Pour les modèles 100 V ou Chine, utilisez le câble du connecteur modulaire (B) fourni.

Conecte el MFP a la línea telefónica.

6. Enchufe el cable del conector modular (7) en el terminal de línea y, a continuación, conecte el otro extremo a la línea telefónica.

Para los modelos 100 V o chino, utilice el cable del conector modular (B) suministrado.

Anschließen des MFP an die Telefonleitung.

6. Telefonmodulkabel (7) in die Gerätebuchse einstecken und das Kabel an der Telefondose anschließen.

Das mitgelieferte Telefonmodulkabel (B) für die 100-V- oder China-Modelle verwenden.

Collegamento dell'MFP alla linea del telefono.

6. Inserire il cavo connettore modulare (7) nel terminale della linea, e quindi collegare l'altro terminale alla linea del telefono.

Per modelli da 100 V o Cina, utilizzare il cavo connettore modulare (B) in dotazione.

将 MFP 连接到电话线

6. 将模块接插件电缆 (7) 插入电话线端子，然后将另一端与电话线连接。

对于 100 V 或中国机型，请使用随附的模块接插件电缆（B）。

전화회선과 접속

6. 모듈코드 (7) 를 라인단자에 꼽습니다 . 다른 한 쪽의 플러그는 전화회선과 접속합니다 .

100V 또는 중국 모델의 경우 제공된 모듈형 커넥터 케이블 (B) 을 사용하십시오 .

電話回線との接続

6. モジュラーコード (7) をライン端子に差し込む。もう片方のプラグは、電話回線へ接続する。

100V/ 中国仕様は付属のモジュラーコード (B) を使用すること。

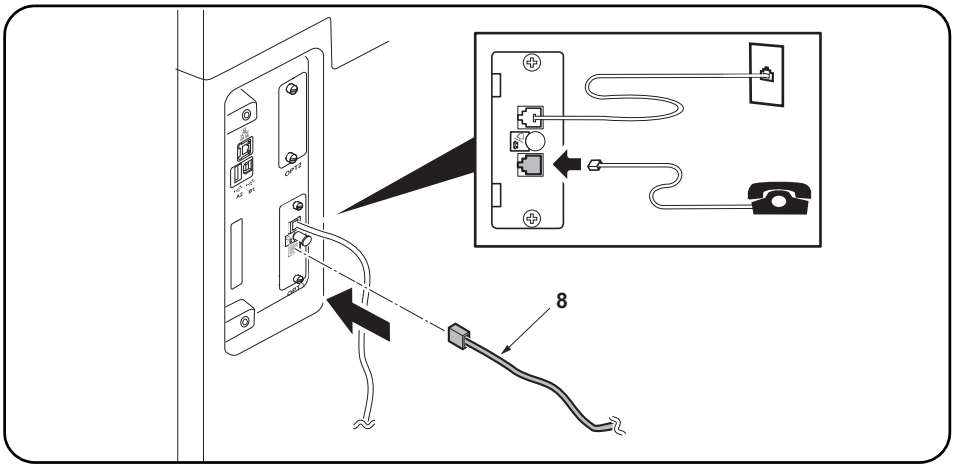

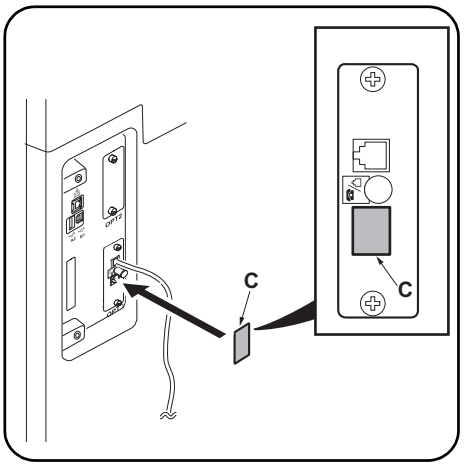

Connect the MFP to the separate phone).

7. Plug the modular connector cable (8) into the telephone terminal, and then connect the other end to the separate phone.

If you don't connect the MFP to the separate phone, wipe the surface of the telephone terminal with alcohol and adhere the terminal seal (C) upon the customer's request.

Connecter le MFP au téléphone séparé.

7. Brancher le câble du connecteur modulaire (8) à la borne du téléphone, puis connecter l'autre extrémité au téléphone séparé.

Si le MFP n'est pas connecté au téléphone séparé à la demande du client, nettoyer la surface de la borne de téléphone avec de l'alcool et apposer le joint de borne (C).

Conecte el MFP al teléfono separado.

7. Enchufe el cable del conector modular (8) en el terminal del teléfono y, a continuación, conecte el otro extremo al teléfono separado.

Si no conecta el MFP a un teléfono separado, limpie la superficie del terminal del teléfono con alcohol y pegue el sello del terminal (C), a solicitud del cliente.

Anschließen des MFP an das separate Telefon.

7. Das Telefonmodulkabel (8) in die Telefonbuchse einstecken und das andere Ende an das separate Telefon anschließen.

Wenn der MFP nicht an das separate Telefon angeschlossen wird, die Oberfläche der Telefonbuchse mit Alkohol abwischen und Verschlusskappe (C) einsetzen, falls vom Kunden gewünscht.

Collegamento dell'MFP al telefono separato.

7. Inserire il cavo connettore modulare (8) nel terminale del telefono, e quindi collegare l'altro terminale al telefono separato.

Nel caso in cui non si colleghi l'MFP al telefono separato, pulire la superficie del terminale del telefono con dell'alcol e applicare la guarnizione terminale (C) a richiesta del cliente.

将 MFP 连接到其它电话

7. 将模块接插件电缆 (8) 插入电话端子，然后将另一端与其他电话连接。

如果您没有将 MFP 连接至其他电话，请用酒精擦拭电话端子表面，并按照客户要求粘上端子密封 (C)。

외부 전화와 접속

7. 모듈코드 (8) 를 TEL 단자에 꼽습니다 . 다른 한 쪽의 플러그는 외부 전화와 접속합니다 .

외부 전화와 접속하지 않는 경우 고객의 요청에 따라 TEL 단자 주위를 알코올 청소하고 단자씰 (C) 을 붙입니다 .

外付け電話との接続

7. モジュラーコード (8) を TEL 端子に差し込む。もう片方のプラグは、外付け電話と接続する。

外付け電話と接続しない場合、お客様の要望により、TEL 端子周囲をアルコール清掃し、端子シール (C) を貼り付ける。

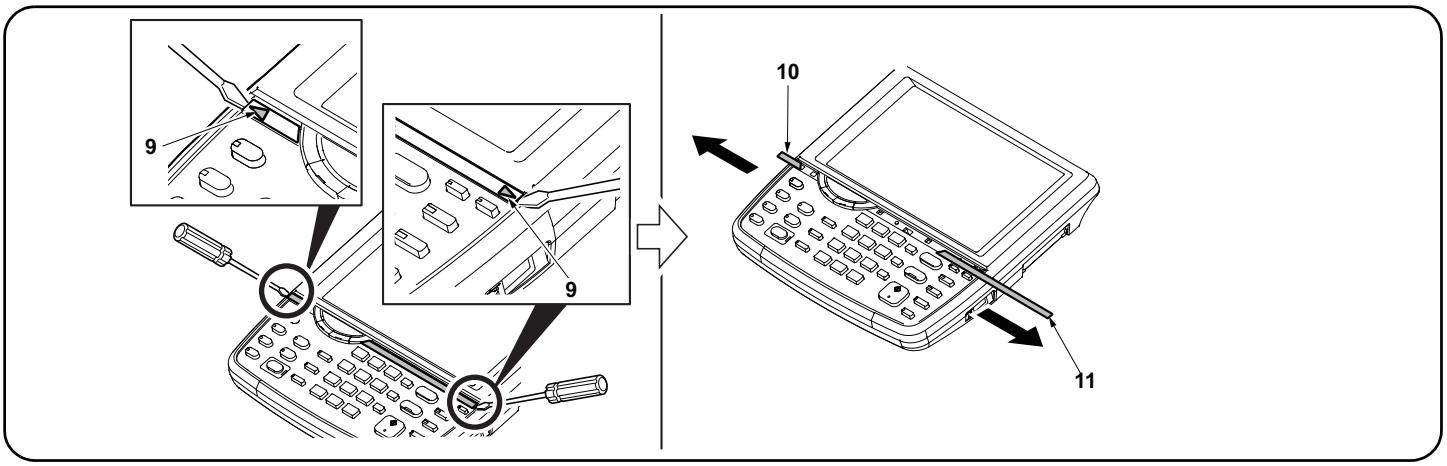

Attach the alphabet labels (excluding 100 V models).

8. Insert a flat-head screwdriver at the tip indicated by the arrows (9) as shown on the left, and slide the operation panel covers (10) (11) to remove them.

Apposer les étiquettes de l'alphabet (Sauf sur les modèles 100 V).

8. Insérer un tournevis à lame à l'endroit repéré par les flèches (9) comme illustré ci-contre à gauche et faire glisser les couvercles du panneau de commande (10) (11) pour les déposer.

Fije las etiquetas de alfabeto (a excepción de los modelos de 100 V).

8. Inserte un destornillador de pala plana en la punta que indican las flechas (9) como se muestra a la izquierda y deslice las cubiertas del panel de trabajo (10) (11) para quitarlas.

Anbringen der Alphabetaufkleber (ausgenommen 100-V-Modelle).

8. Einen flachen Schraubendreher an der links mit Pfeilen (9) bezeichneten Spitze einschieben und die Bedienfeldabdeckungen (10) (11) verschieben, um sie dann abzunehmen.

Applicare le etichette alfabetiche (esclusi i modelli da 100 V).

8. Inserire un cacciavite a testa piana nel punto indicato dalla freccia (9) come mostrato sulla sinistra, e slittare i coperchi (10) (11) del pannello operativo per rimuoverli.

粘贴英文字母标签（100V 规格以外）

8. 如图所示，在▲箭头（9）前方插入一字螺丝刀，滑动并取下操作面板的盖板（10）（11）。

알파벳 라벨의 부착 (100V 사양 이외)

8. 그림과 같이 ▲ 표시 (9) 앞에 마이너스 드라이버를 삽입해 조작 판넬의 커버 (10) (11) 를 미끄러트리면서 떼어 냅니다 .

アルファベットラベルの貼り付け（100V 仕様以外）

8. この作業は不要。

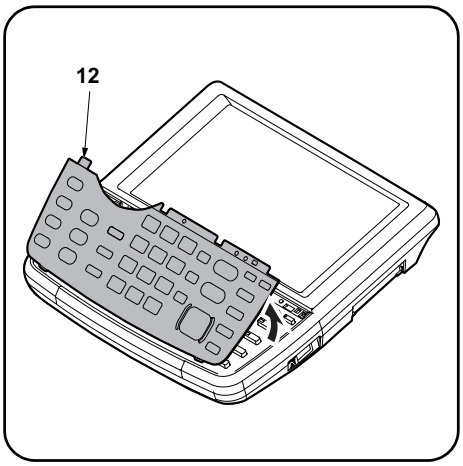

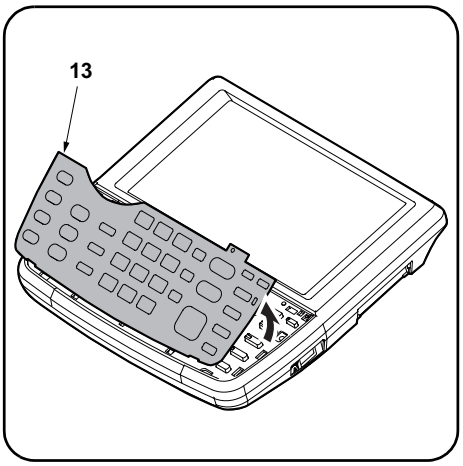

9. Remove the clear panel (12).

10. Remove the operation panel sheet (13).

---

9. Déposer le panneau transparent (12).

10. Déposer la tôle du panneau de commande (13).

---

9. Quite el panel transparente (12).

10. Quite la hoja del panel de trabajo (13).

---

9. Die durchsichtige Platte (12) entfernen.

10. Die Bedienfeldfolie (13) entfernen.

---

9. Rimuovere il pannello trasparente (12).

10. Rimuovere il foglio (13) del pannello operativo.

---

9. 拆下透明面板（12）。

10. 拆下操作面板页（13）。

---

9. 클리어 판넬 (12) 을 제거합니다 .

10. 조작판넬시트 (13) 를 제거합니다 .

---

9. この作業は不要。

10. この作業は不要。

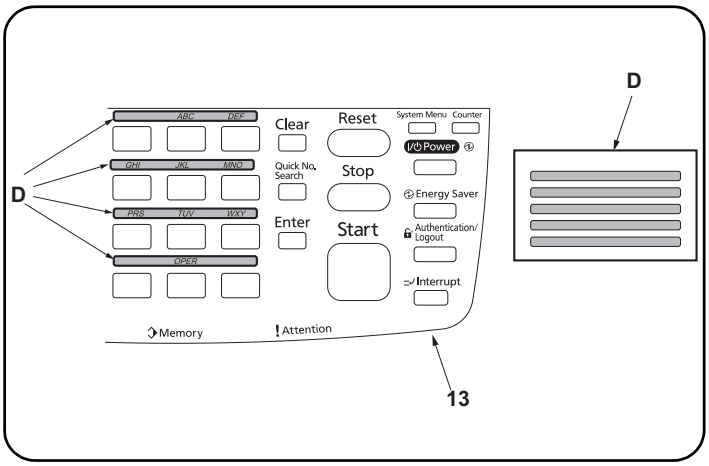

11. Wipe the area above the numeric keys on the operation panel sheet (13) with alcohol and attach the alphabet labels (D).
In Asia and Oceania, use PQRS TUV WXYZ label, and do not use PRS TUV WXY and OPER labels.

---

11. Nettoyer à l'alcool la surface au-dessus des touches numériques sur la tôle du panneau de commande (13) et apposer les étiquettes alphabétiques (D).
En Asie et Océanie, utiliser l'étiquette PQRS TUV WXYZ et pas les étiquettes PRS TUV WXY et OPER.

---

11. Limpie el área sobre las teclas numéricas de la hoja del panel de trabajo (13) con alcohol y fije las etiquetas de alfabeto (D).
En Asia y Oceanía, utilice la etiqueta PQRS TUV WXYZ y no use las PRS TUV WXY ni las OPER.

---

11. Den Bereich über den Zifferntasten an der Bedienfeldfolie (13) mit Alkohol abwischen und die Alphabetaufkleber (D) hier anbringen.
In Asien und Ozeanien den Aufkleber PQRS TUV WXYZ verwenden; nicht die Aufkleber PRS TUV WXY und OPER verwenden.

---

11. Pulire l'area sopra i tasti numerici sul foglio del pannello operativo (13) con alcool ed applicare le etichette alfabetiche (D).
In Asia ed Oceania, utilizzare l'etichetta PQRS TUV WXYZ e non utilizzare le etichette PRS TUV WXY e OPER.

---

11. 使用酒精清洁操作面板页（13）的数字键上部，粘贴英文字母标签（D）。
在亚洲和大洋州，请使用 PQRS TUV WXYZ 标签，而不要使用 PRS TUV WXY 和 OPER 标签。

---

11. 조작판넬시트 (13) 의 텐키 윗측을 알코올 청소하고 알파벳 라벨 (D) 을 붙입니다 .
아시아?오세아니아에서는「PRS TUV WXY」및「OPER」라벨을 사용하지 말고「PQRS TUV WXYZ」의 라벨을 사용할 것 .

---

11. この作業は不要。

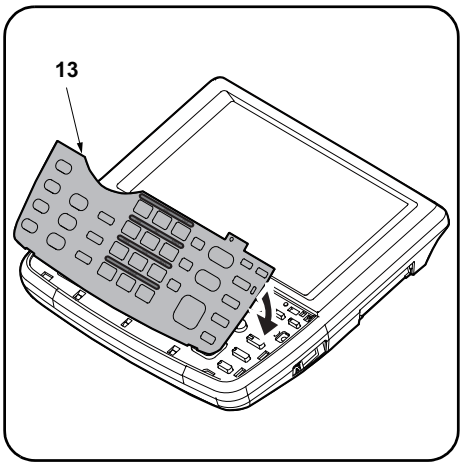

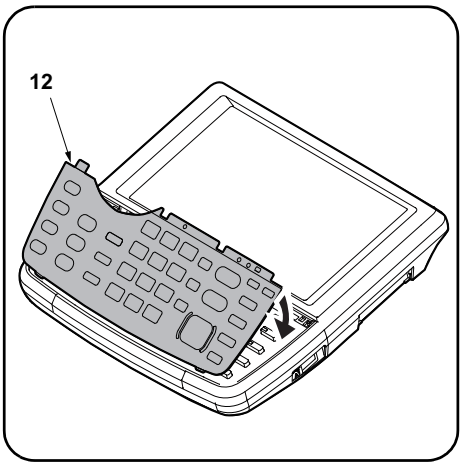

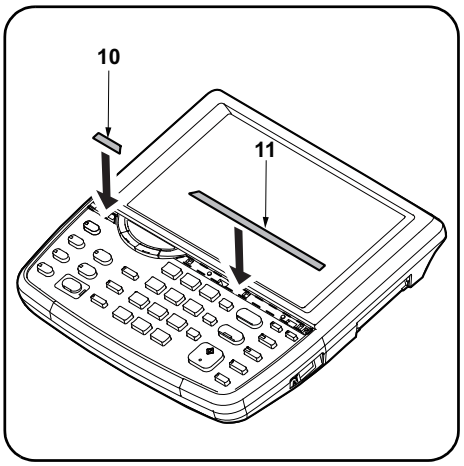

12. Attach the operation panel sheet (13).

13. Reinstall the clear panel (12).

14. Reinstall the operation panel covers (10) (11).

---

12. Fixer la tôle du panneau de commande (13).

13. Reposer le panneau transparent (12).

14. Reposer les couvercles du panneau de commande (10) (11).

---

12. Fije la hoja del panel de trabajo (13).

13. Vuelva a instalar el panel transparente (12).

14. Vuelva a instalar las cubiertas del panel de trabajo (10) (11).

---

12. Die Bedienfeldfolie (13) anbringen.

13. Die durchsichtige Platte (12) wieder anbringen.

14. Die Bedienfeldabdeckungen (10) (11) wieder anbringen.

---

12. Applicare il foglio del pannello operativo (13).

13. Reinstallare il pannello trasparente (12).

14. Reinstallare i coperchi (10) (11) del pannello operativo.

---

12. 安装操作面板页（13）。

13. 安装透明面板（12）。

14. 安装操作面板的盖板（10）（11）。

---

12. 조작판넬시트 (13) 를 붙입니다 .

13. 클리어판넬 (12) 를 부착합니다 .

14. 조작판넬 커버 (10) (11) 을 부착합니다 .

---

12. この作業は不要。

13. この作業は不要。

14. この作業は不要。

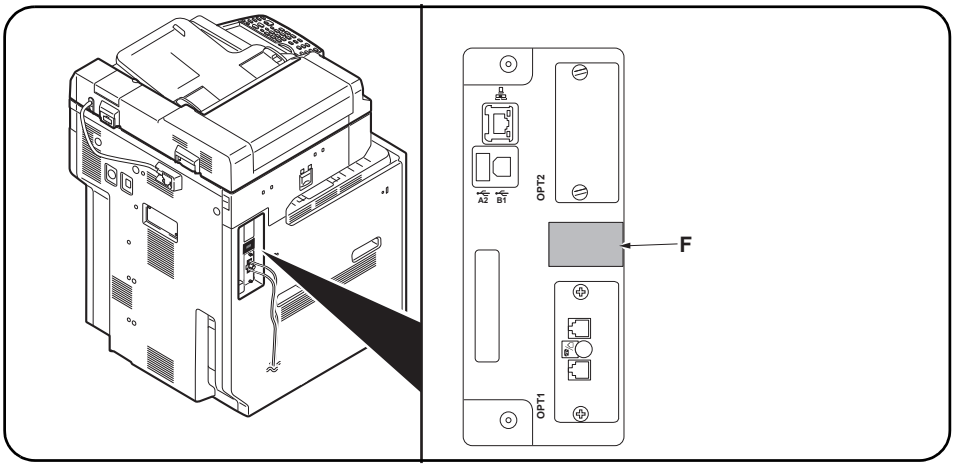

Attach the PTT label (for China, 110 V models only).
15. Attach the PTT label (F) after wiping with alcohol.

When installing the optional Dual FAX (when adding the FAX circuit board to OPT2), proceed to the following procedures.When not installing, proceed to page 16.

Fixer l'étiquette d'approbation (pour la Chine, modèles 110 V seulement).
15. Cette étape est superflue.

Lorsqu'on installe le FAX double en option (lorsqu'on ajoute la carte à circuits FAX à l'OPT2), effectuer les procédures suivantes.
Si on ne l'installe pas, passer à la page 16.

Coloque la etiqueta de aprobación (para China, solo para los modelos de 110 V).
15. Este paso no es necesario.

Cuando instale el FAX dual opcional (cuando agrega la tarjeta de circuitos de FAX a OPT2), vaya a los siguientes procedimientos.
Cuando no lo instala, vaya a la página 16.

Den Genehmigungsaufkleber anbringen (für China nur 110-V-Modelle).
15. Dieser Schritt ist nicht erforderlich.

Wenn das optionale Dual FAX installiert wird (Hinzufügen der FAX-Leiterplatte zu OPT2), mit den folgenden Verfahren fortfahren.
Erfolgt diese Installation nicht, mit Seite 16 fortfahren.

Applicare l'etichetta di approvazione (per Cina, solo per i modelli da 110 V).
15. Questo passo non è richiesto.

Quando si installa il Dual FAX opzionale (quando si aggiunge la scheda a circuiti FAX all'OPT2), continuare con la seguente procedura.
Se non si esegue l'installazione passare alla pagina 16.

粘贴规格标签（仅限中国、110V 规格）
15. 用酒精清洁后，请在如图所示的位置贴上规格标签 (F)。

安装选购件的多插口组件时（将传真电路板安装在 OPT2 上时），请按以下步骤进行。
不安装时，按第 16 页的要求进行操作。

규격라벨의 부착 (중국 , 110V 사양만)
15. 이 단계가 필요하지 않습니다 .

옵션 멀티포트를 설치하는 경우
(FAX 기판을 OPT2 에 증설하는 경우) 에는 다음 순서로 진행합니다 .
설치하지 않는 경우에는 16 페이지로 진행합니다 .

規格ラベルの貼り付け（中国、110V 仕様のみ）
15. この作業は不要。

オプションのマルチポートを設置する場合
(FAX 基板を OPT2 に増設する場合)は、次の手順に進む。
設置しない場合は、16 ページへ進む。

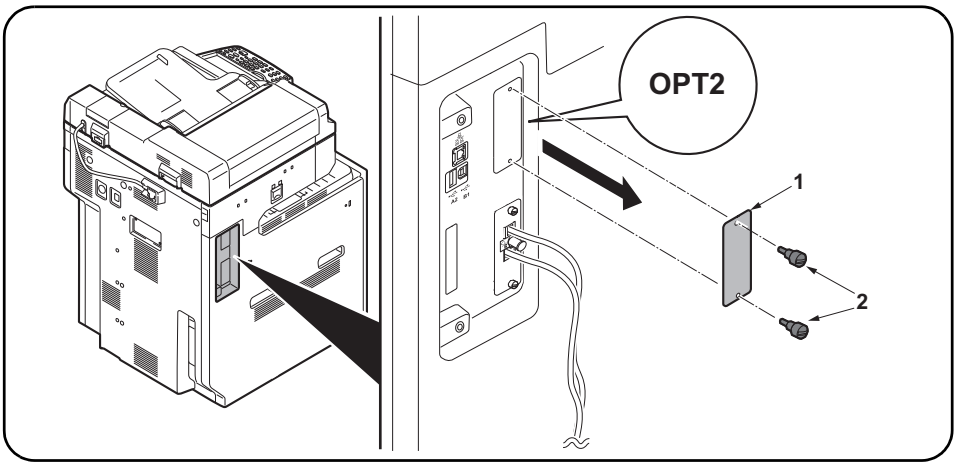

Install the Dual FAX
Refer to page 1 for the supplied parts.

Removing the slot cover
1.Remove 2 screws (2) and then remove the OPT2 slot cover (1).

Installer le FAX double.
Pour plus de détails concernant les pièces fournies, se reporter à la page 1.

Dépose du couvercle de la fente
1.Déposer les 2 vis (2) puis le couvercle de la fente OPT2 (1).

Instale el FAX dual
Consulte la página 1 de las piezas suministradas.

Desmontaje de la cubierta de la ranura
1.Quite 2 tornillos (2) y, después, quite la cubierta de la ranura OPT2 (1).

Installieren des Dual FAX
Die mitgelieferten Teile sind auf Seite 1 aufgelistet.

Entfernen der Einschubabdeckung
1.2 Schrauben (2) entfernen und dann die Abdeckung (1) des Einschubs OPT2 entfernen.

Installare il Dual FAX
Fare riferimento alla pagina 1 per le parti in dotazione.

Rimozione del coperchio vano
1.Rimuovere le 2 viti (2) e quinidi rimuovere il coperchio (1) del vano OPT2.

安装多插口组件
同装品时，参照第 1 页。

拆下插槽盖板
1. 拆除 2 颗螺丝 (2)，拆下 OPT2 的插槽盖板 (1)。

멀티포트 설치
동봉품은 1 페이지를 참조합니다 .

슬롯커버 제거
1. 나사 (2) 2 개를 제거하고 OPT2 의 슬롯커버 (1) 를 제거합니다 .

マルチポートの設置
同梱品は 1 ページを参照する。

スロットカバーの取り外し
1. ビス (2)2 本を外し、OPT2 のスロットカバー (1) を取り外す。

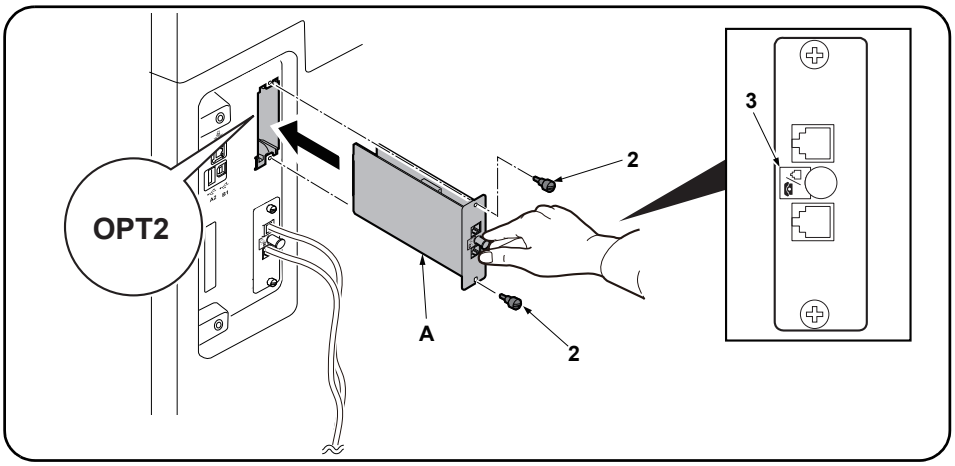

Install the FAX circuit board.

2. Insert the FAX circuit board (A) along the groove in OPT2 and secure the board with two screws (2) that have been removed in step 1.
Do not directly touch the FAX circuit board (A) terminal.
Hold the top and bottom of the FAX circuit board, or the projection of the board to insert the FAX circuit board (A).
Direct the label (3) on to the FAX circuit board (A) toward left side and insert the board along the groove.

Installer la carte à circuits FAX.

2. Insérer la carte à circuits FAX (A) le long de la rainure dans l'OPT2 et la fixer à l'aide des deux vis (2) retirées à l'étape 1.
Ne pas toucher directement la borne de la carte à circuits FAX (A).
Tenir les parties inférieure et supérieure de la carte à circuits FAX ou la saillie de la carte pour insérer la carte à circuits FAX (A).
Orienter l'étiquette (3) de la carte à circuits FAX (A) comme illustré et insérer la plaquette le long de la rainure.

Instale la tarjeta de circuitos de FAX.

2. Inserte la tarjeta de circuitos de fax (A) a lo largo de la ranura de OPT2 y asegúrela con los dos tornillos (2) que ha quitado en el paso 1.
No toque directamente el terminal de la tarjeta de circuitos del FAX (A).
Sujete las partes superior e inferior de la tarjeta de circuitos de FAX o la saliente de la tarjeta para insertar la tarjeta de circuitos de FAX (A).
Oriente la etiqueta (3) en la tarjeta de circuitos del FAX (A) como se indica en la ilustración e inserte la tarjeta a lo largo de la ranura.

Installieren der FAX-Leiterplatte.

2. FAX-Leiterplatte (A) in die Nut des Einbauschachts OPT2 einsetzen und Leiterplatte mit den in Schritt1 ausgebauten Schrauben (2) befestigen.
Berühren Sie die Anschlüsse der FAX-Platine (A) nicht mit den Fingern.
Die FAX-Leiterplatte (A) bein Einsetzen oben und unten oder an dem Vorsprung festhalten.
Die FAX-Leiterplatte (A) so in die Nut einsetzen, dass der Aufkleber (3) wie abgebildet zur Leiterplatte zeigt.

Installare la scheda a circuiti FAX.

2. Inserire la scheda a circuiti FAX (A) lungo l'incavo nell'OPT2 e fissare la scheda con le due viti (2) rimosse nell'operazione 1.
Non toccare direttamente il terminale della scheda a circuiti FAX (A),
Per inserire il circuito FAX (A), tenere l'estremit superiore e la base della scheda a circuiti FAX, o la sporgenza della scheda a circuiti FAX.
Orientare l'etichetta (3) sulla scheda a circuiti FAX (A) come indicato nell'illustrazione e inserire la scheda lungo l'incavo.

安装传真电路板

2. 沿着 OPT2 的沟槽插入传真电路板 (A) 并用在步骤 1 中拆下的两颗螺钉 (2) 固定电路板。
请勿直接触摸传真电路板 (A) 端子。
按住传真电路板的顶部和底部，或者按住电路板的突出部将传真电路板 (A) 插入。
将传真电路板 (A) 上的标签 (3) 保持图示中的方向，将电路板沿着沟槽方向插入。

FAX 기판 장착

2. OPT2 구에 붙여 FAX 기판 (A) 를 삽입하고 순서 1 에서 제거한 나사 (2) 2 개로 고정합니다 .
FAX 기판 (A) 의 단자에 직접 닿지 않게 할 것 .
FAX 기판 (A) 을 삽입 시에는 기판의 상하 또는 돌기를 잡을 것 .
FAX 기판 (A) 을 붙여진 라벨 (3) 그림 표기 방향대로 되도록 삽입할 것 .

FAX 基板の取り付け

2. OPT2 の溝に沿って FAX 基板 (A) を挿入し、手順 1 で外したビス (2)2 本で固定する。
FAX 基板 (A) の端子に直接触れないこと。
FAX 基板 (A) の挿入時は基板の上下か突起を持つこと。
FAX 基板 (A) は、貼り付けられているラベル (3) が図に示す方向になるように、挿入すること。

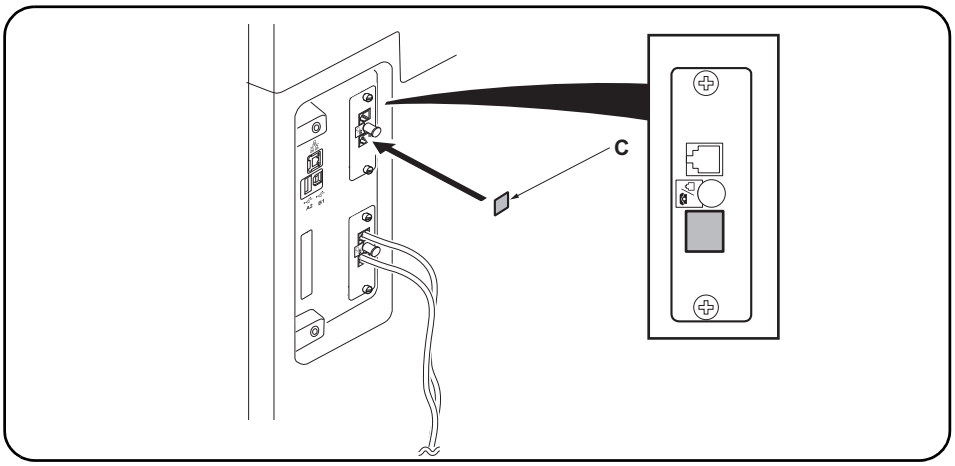

Seal the terminal.

3. Wipe the surface of the telephone terminal with alcohol and adhere the terminal seal (C).
The telephone terminal on the FAX circuit board installed to OPT2 is unavailable (invalid). Seal the terminal securely to prevent a user from connecting a separate phone.

Fermer hermétiquement la borne.

3. Nettoyer la surface de la borne de téléphone avec de l'alcool, et apposer le joint de borne (C).
La borne de téléphone de la carte à circuits FAX installée sur l'OPT2 n'est pas utilisable (invalide). Fermer hermétiquement la borne pour empêcher tout utilisateur de connecter un téléphone séparé.

Selle el terminal.

3. Limpie la superficie del terminal de teléfono con alcohol y pegue el sello de terminal (C).
El terminal de teléfono de la tarjeta de circuitos de FAX instalado en el OPT2 no está disponible (inválido). Selle firmemente el terminal para evitar que un usuario conecte un teléfono por separado.

Versiegeln der Anschlussbuchse.

3. Die Oberfläche der Telefonanschlussbuchse mit Alkohol abwischen und die Verschlusskappe (C) anbringen.
Die Telefonanschlussbuchse der in OPT2 installierten FAX-Leiterplatte ist nicht verfügbar (ungültig). Die Anschlussbuchse vollkommen versiegeln, um den Anschluss eines separaten Telefons zu verhindern.

Sigillare il terminale.

3. Pulire la superficie del terminale del telefono con alcol e fare aderire la guarnizione terminale (C).
Il terminale del telefono sulla scheda a circuiti FAX installata su OPT2 non è disponibile (invalido). Sigillare il terminale saldamente per prevenire a un utente di collegare un telefono separato.

安装端子密封

3. 用酒精擦拭电话端子表面并粘上端子密封 (C)。
安装在 OPT2 上的传真电路板的电话端子不可使用 (无效)。为了避免用户错误与其它电话连接，必须确实粘贴好端子密封。

단자씰의 부착

3. TEL 단자주위를 알코올청소하고 단자씰 (C) 을 부착합니다 .
OPT2 에 부착한 FAX 기판의 TEL 단자는 사용불가 (무효) 가 됩니다 . 사용자가 잘못해 외부 전화를 접속하지 않도록 확실히 부착할 것 .

端子シールの貼り付け

3. TEL 端子周囲をアルコール清掃し、端子シール (C) を貼り付ける。
OPT2 に取り付けた FAX 基板の TEL 端子は使用不可(無効)となる。ユーザーが誤って外付け電話を接続しないよう確実に貼り付けること。

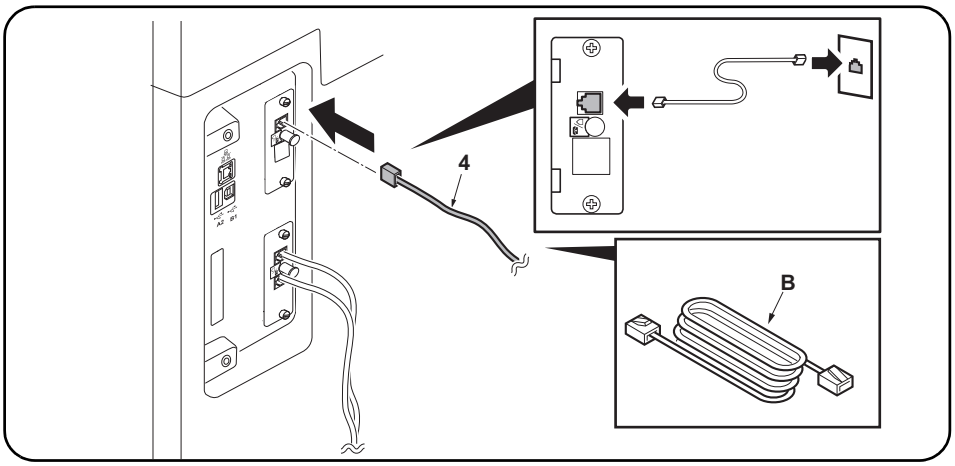

Connect the MFP to the telephone line.

4. Plug the modular connector cable (4) into the line terminal, and then connect the other end to the telephone line.
For 100 V or Chinese models, use the supplied modular connecter cable (B).

Connecter le MFP à la ligne de téléphone.

4. Brancher le câble du connecteur modulaire (4) à la borne de la ligne, puis connecter l'autre extrémité à la ligne de téléphone.
Pour les modèles 100 V ou Chine, utilisez le câble du connecteur modulaire (B) fourni.

Conecte el MFP a la línea telefónica.

4. Enchufe el cable del conector modular (4) en el terminal de línea y, a continuación, conecte el otro extremo a la línea telefónica.
Para los modelos 100 V o chino, utilice el cable del conector modular (B) suministrado.

Anschließen des MFP an die Telefonleitung.

4. Telefonmodulkabel (4) in die Gerätebuchse einstecken und das Kabel an der Telefondose anschließen.
Das mitgelieferte Telefonmodulkabel (B) für die 100-V- oder China-Modelle verwenden.

Collegamento dell'MFP alla linea del telefono.

4. Inserire il cavo connettore modulare (4) nel terminale della linea, e quindi collegare l'altro terminale alla linea del telefono.
Per modelli da 100 V o Cina, utilizzare il cavo connettore modulare (B) in dotazione.

将 MFP 连接到电话线

4. 将模块接插件电缆 (4) 插入电话线端子，然后将另一端与电话线连接。
对于 100 V 或中国机型，请使用随附的模块接插件电缆（B）。

전화회선과의 접속

4. 모듈코드 (4) 를 라인단자에 꼽습니다 . 다른 한 쪽의 플러그는 전화회선과 접속합니다 .
100V 또는 중국 모델의 경우 제공된 모듈형 커넥터 케이블 (B) 을 사용하십시오 .

電話回線との接続

4. モジュラーコード (4) をライン端子に差し込む。もう片方のプラグは、電話回線へ接続する。
100V/ 中国仕様は付属のモジュラーコード (B) を使用すること。

(Initialize the FAX circuit board.

1. Plug the MFP into a power outlet, and turn on the main power.
2. If the FAX circuit board has been installed only in OPT1 or installed both in OPT1 and OPT2 (to initialize all FAX circuit boards) Perform the maintenance mode U600 to initialize the fax control assembly.
3. If the FAX circuit board has been added to OPT2 (to initialize the FAX circuit board in OPT2)
   Initialize OPT2 by pressing [PORT2], and the Start key in this order in the maintenance mode U698 and executing the maintenance mode U600. If [ALL] is selected in U698, both OPT1 and OPT2 are initialized. For details, see the service manual.

Initialiser la carte à circuits FAX.

1. Brancher le MFP sur une prise d'alimentation et le mettre sous tension.
2. Si la carte à circuits FAX a été installée dans l'OPT1 seulement, ou a été installée dans l'OPT1 et dans l'OPT2 (pour initialiser toutes les cartes à circuits FAX) Exécuter le mode de maintenance U600 pour initialiser l'ensemble de commande de fax.
3. Si la carte à circuits FAX a été ajoutée à l'OPT2 (pour initialiser la carte à circuits FAX dans l'OPT2)
   Initialiser l'OPT2 en appuyant sur [PORT2] et la touche Départ dans cet ordre en mode de maintenance U698, et exécuter le mode de maintenance U600. Si [ALL] est sélectionné dans U698, l'OPT1 et l'OPT2 sont tous deux initialisés. Pour plus de détails, se reporter au manuel d'entretien.

Inicialice la tarjeta de circuitos FAX.

1. Conecte el MFP a un receptáculo de pared y encienda el interruptor principal.
2. Si la tarjeta de circuitos de FAX se instaló solo en OPT1 o se instaló tanto en OPT1 como OPT2(para inicializar todas las tarjetas de circuito de FAX) Ejecute el modo de mantenimiento U600 para inicializar el conjunto de control de fax.
3. Si la tarjeta de circuitos de FAX se agregó a OPT2 (para inicializar la tarjeta de circuitos de FAX en OPT2)
   Inicialice el OPT2 presionando [PORT2] y la tecla de Inicio en ese orden en el modo de mantenimiento U698 y ejecutando el modo de mantenimiento U600. Si se selecciona [ALL] en U698, se inicializan ambos OPT1 y OPT2. Para más detalles, lea el manual de servicio.

Initialisieren der FAX-Leiterplatte.

1. Netzstecker des MFP in eine Steckdose stecken und Hauptschalter einschalten.
2. Wenn die FAX-Leiterplatte nur in OPT1 oder sowohl in OPT1 als auch in OPT2 installiert worden ist (um alle FAX-Leiterplatten zu initialisieren) Wartungsmodus U600 ausführen, um die Faxsteuerbaugruppe zu initialisieren.
3. Wenn die FAX-Leiterplatte zu OPT2 hinzugefügt worden ist (um die FAX-Leiterplatte in OPT2 zu in7itialisieren)
   OPT2 initialisieren. Dazu [PORT2] und die Start-Taste im Wartungsmodus U698 in dieser Reihenfolge drücken und den Wartungsmodus U600 ausführen. Wenn [ALL] in U698 gewählt wird, werden OPT1 und OPT2 initialisiert. Weitere Einzelheiten siehe Wartungsanleitung.

Inizializzare la scheda a circuiti FAX.

1. Collegare l'MFP ad una presa di corrente e portare l'interruttore principale su On.
2. Se la scheda a circuiti FAX è stata installata solo nell'OPT1 o in entrambi l'OPT1 e l'OPT2(per inizializzare tutte le schede di circuito FAX) Eseguire il modo di manutenzione U600 per inizializzare il gruppo di controllo fax.
3. Se la scheda a circuiti è stata aggiunta all'OPT2 (per inzializzare la scheda a circuiti FAX nell'OPT2)
   Inizializzare OPT2 premendo [PORT2] e il tasto Avvio in questo ordine nel modo di manutenzione U698 ed eseguendo il modo di manutenzione U600. Se viene selezionato [ALL] nel modo U698, entrambi OPT1 e OPT2 sono inizializzati. Per ulteriori dettagli leggere il manuale d'istruzioni.

传真电话板的初始化

1. 将 MFP 插入电源插座，打开主电源。
2. 仅限于在 OPT1 或 OPT1 和 OPT2 上同时安装传真电路板时（全部的传真电路板初始化）
   执行维修保养模式 U600，初始化传真控制组件
3. 在 OPT2 上增设时
   (OPT2 的传真电路板初始化）
   只进行 OPT2 初始化时，在维修保养模式 U698 状态下，按顺序按下“PORT2”、开始键，执行维修保养模式 U600。
   在 U698 状态下设定 “ALL” 时，会使 OPT1 和 OPT2 均初始化。
   有关详信息，请参见维修手册。

FAX 기판의 초기화

1. MFP 본체 전원플러그를 콘센트에 꼽고 주 전원 스위치를 ON 으로 한다 .
2. OPT1 만 또는 OPT1 와 OPT2 에 FAX 기판을 동시에 설치한 경우 (전부 FAX 기판을 초기화) 메인터넌스 모드 U600 을 실행하고 FAX 기판을 초기화합니다 .
3. OPT2 에 증설한 경우 (OPT2 의 FAX 기판을 초기화)
   메인터넌스모드 U698 에서 「PORT2」, 시작키 순으로 누릅니다 . 메인터넌스 모드 U600 을 실행하고 FAX 기판을 초기화합니다 .
   U698 에서 「ALL」을 설정하면 OPT1 과 OPT2 양쪽을 초기화하기 때문에 주의할 것 .
   상세는 서비스 매뉴얼을 참조할 것 .

FAX 基板の初期化

1. MFP 本体の電源プラグをコンセントに差し込み、主電源スイッチを ON にする。
2. OPT1 のみまたは OPT1 と OPT2 に FAX 基板を同時に設置した場合（すべての FAX 基板を初期化）メンテナンスモード U600 を実行し、FAX 基板を初期化する。
3. OPT2 に増設した場合（OPT2 の FAX 基板を初期化）
   メンテナンスモード U698 で「PORT2」、スタートキーの順に押す。メンテナンスモード U600 を実行し、FAX 基板を初期化する。
   U698 で「ALL」を設定すると OPT1 と OPT2 両方を初期化するので注意すること。詳細はサービスマニュアルを参照のこと。

ENG **Removing/Installing the Finisher**

FR **Retrait/Installation du finisseur**

ES **Extracción/instalación del Finalizador**

DE **Montage oder Demontage des Finishers**

IT **Rimozione/Installazione della finitrice.**

CN 拆卸 / 安装装订器

KO 피니셔 제거/설치하기

JP フィニッシャーの取り外し/取り付け手順

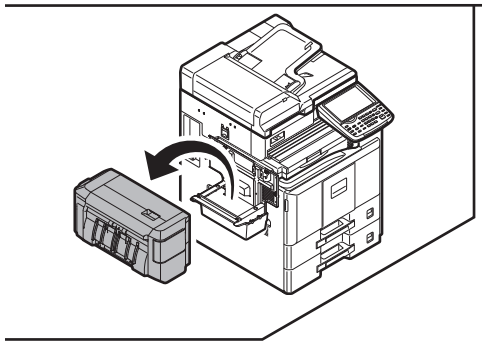

1

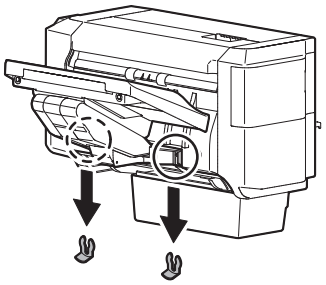

2

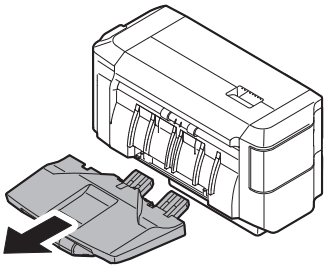

3

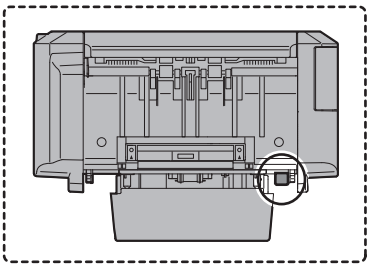

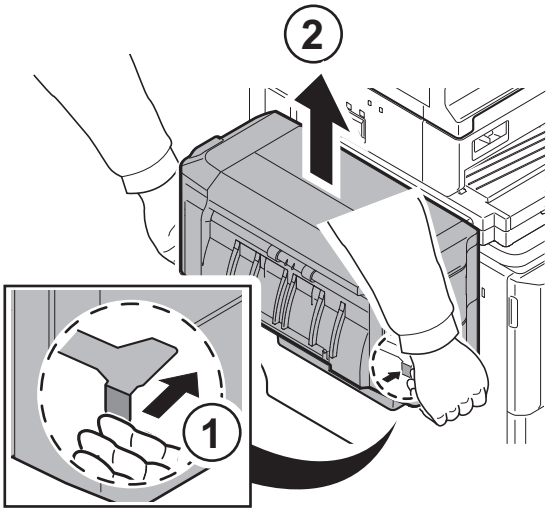

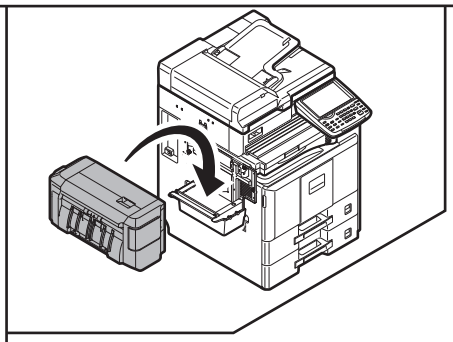

1

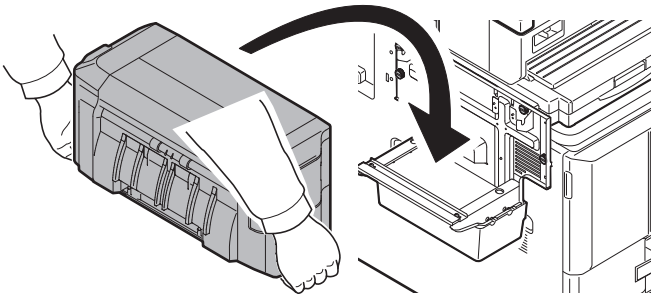

2

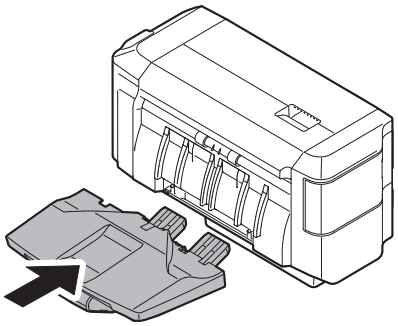

3

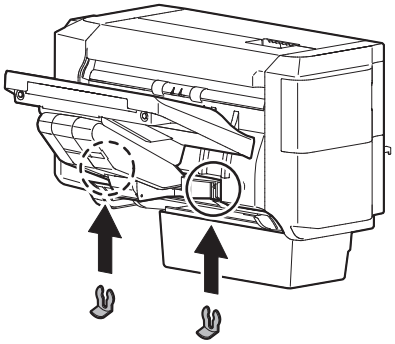

KYOCERA Document Solutions America, Inc.
Headquarters
225 Sand Road,
Fairfield, New Jersey 07004-0008, USA
Phone: +1-973-808-8444
Fax: +1-973-882-6000

Latin America
8240 NW 52nd Terrace Dawson Building, Suite 100
Miami, Florida 33166, USA
Phone: +1-305-421-6640
Fax: +1-305-421-6666

KYOCERA Document Solutions Canada, Ltd.
6120 Kestrel Rd., Mississauga, ON L5T 1S8,
Canada
Phone: +1-905-670-4425
Fax: +1-905-670-8116

KYOCERA Document Solutions Mexico, S.A. de C.V.
Calle Arquimedes No. 130, 4 Piso, Colonia Polanco
Chapultepec, Delegacion Miguel Hidalgo,
Distrito Federal, C.P. 11560, México
Phone: +52-555-383-2741
Fax: +52-555-383-7804

KYOCERA Document Solutions Brazil, Ltda.
Av.Tambore,1180 Mod.B-09 CEP 06460-000
Tambore-Barueri-SP, Brazil
Phone: +55-11-4195-8496
Fax: +55-11-4195-6167

KYOCERA Document Solutions Australia Pty. Ltd.
Level 3, 6-10 Talavera Road North Ryde N.S.W, 2113,
Australia
Phone: +61-2-9888-9999
Fax: +61-2-9888-9588

KYOCERA Document Solutions New Zealand Ltd.
1-3 Parkhead Place, Albany, Auckland 1330,
New Zealand
Phone: +64-9-415-4517
Fax: +64-9-415-4597

KYOCERA Document Solutions Asia Limited
16/F.,Mita Centre, 552-566, Castle Peak Road
Tsuenwan, NT, Hong Kong
Phone: +852-2610-2181
Fax: +852-2610-2063

KYOCERA Document Solutions (Thailand) Corp., Ltd.
335 Ratchadapisek Road, Bangsue, Bangkok 10800,
Thailand
Phone: +66-2-586-0333
Fax: +66-2-586-0278

KYOCERA Document Solutions Singapore Pte. Ltd.
12 Tai Seng Street #04-01A,
Luxasia Building, Singapore 534118
Phone: +65-6741-8733
Fax: +65-6748-3788

KYOCERA Document Solutions Hong Kong Limited
16/F.,Mita Centre, 552-566, Castle Peak Road
Tsuenwan, NT, Hong Kong
Phone: +852-2429-7422
Fax: +852-2423-2159

KYOCERA Document Solutions Taiwan Corporation
6F., No.37, Sec. 3, Minquan E. Rd.,
Zhongshan Dist., Taipei 104, Taiwan R.O.C.
Phone: +886-2-2507-6709
Fax: +886-2-2507-8432

KYOCERA Document Solutions Korea Co., Ltd.
18F, Kangnam bldg, 1321-1,
Seocho-Dong, Seocho-Gu, Seoul, Korea
Phone: +822-6933-4050
Fax: +822-747-0084

KYOCERA Document Solutions India Private Limited
First Floor, ORCHID CENTRE
Sector-53, Golf Course Road, Gurgaon 122 002,
India
Phone: +91-0124-4671000
Fax: +91-0124-4671001

KYOCERA Document Solutions Europe B.V.
Bloemlaan 4, 2132 NP Hoofddorp,
The Netherlands
Phone: +31-20-654-0000
Fax: +31-20-653-1256

KYOCERA Document Solutions Nederland B.V.
Beechavenue 25, 1119 RA Schiphol-Rijk,
The Netherlands
Phone: +31-20-5877200
Fax: +31-20-5877260

KYOCERA Document Solutions (U.K.) Limited
8 Beacontree Plaza,
Gillette Way Reading, Berkshire RG2 0BS,
United Kingdom
Phone: +44-118-931-1500
Fax: +44-118-931-1108

KYOCERA Document Solutions Italia S.p.A.
Via Verdi, 89/91 20063 Cernusco s/N.(MI),
Italy
Phone: +39-02-921791
Fax: +39-02-92179-600

KYOCERA Document Solutions Belgium N.V.
Sint-Martinusweg 199-201 1930 Zaventem,
Belgium
Phone: +32-2-7209270
Fax: +32-2-7208748

KYOCERA Document Solutions France S.A.S.
Espace Technologique de St Aubin
Route de l'Orme 91195 Gif-sur-Yvette CEDEX,
France
Phone: +33-1-69852600
Fax: +33-1-69853409

KYOCERA Document Solutions Espana, S.A.
Edificio Kyocera, Avda. de Manacor No.2,
28290 Las Matas (Madrid), Spain
Phone: +34-91-6318392
Fax: +34-91-6318219

KYOCERA Document Solutions Finland Oy
Atomitie 5C, 00370 Helsinki,
Finland
Phone: +358-9-47805200
Fax: +358-9-47805390

KYOCERA Document Solutions Europe B.V., Amsterdam (NL) Zürich Branch
Hohlstrasse 614, 8048 Zürich,
Switzerland
Phone: +41-44-9084949
Fax: +41-44-9084950

KYOCERA Document Solutions Deutschland GmbH
Otto-Hahn-Strasse 12, 40670 Meerbusch,
Germany
Phone: +49-2159-9180
Fax: +49-2159-918100

KYOCERA Document Solutions Austria GmbH
Eduard-Kittenberger-Gasse 95, 1230 Vienna,
Austria
Phone: +43-1-863380
Fax: +43-1-86338-400

KYOCERA Document Solutions Nordic AB
Esbogatan 16B 164 75 Kista, Sweden
Phone: +46-8-546-550-00
Fax: +46-8-546-550-10

KYOCERA Document Solutions Norge NUF
Postboks 150 Oppsal, 0619 Oslo,
Norway
Phone: +47-22-62-73-00
Fax: +47-22-62-72-00

KYOCERA Document Solutions Danmark A/S
Ejby Industrivej 60, DK-2600 Glostrup,
Denmark
Phone: +45-70223880
Fax: +45-45765850

KYOCERA Document Solutions Portugal Lda.
Rua do Centro Cultural, 41 (Alvalade) 1700-106 Lisboa,
Portugal
Phone: +351-21-843-6780
Fax: +351-21-849-3312

KYOCERA Document Solutions South Africa (Pty) Ltd.
49 Kyalami Boulevard,
Kyalami Business Park 1685 Midrand, South Africa
Phone: +27-11-540-2600
Fax: +27-11-466-3050

KYOCERA Document Solutions Russia LLC
Botanichesky pereulok 5, Moscow, 129090,
Russia
Phone: +7(495)741-0004
Fax: +7(495)741-0018

KYOCERA Document Solutions Middle East
Dubai Internet City, Bldg. 17,
Office 157 P.O. Box 500817, Dubai,
United Arab Emirates
Phone: +971-04-433-0412

KYOCERA Document Solutions Inc.
2-28, 1-chome, Tamatsukuri, Chuo-ku
Osaka 540-8585, Japan
Phone: +81-6-6764-3555
http://www.kyoceradocumentsolutions.com